CITY OF DULUTH

DEPARTMENT OF PUBLIC WORKS AND UTILITIES - ENGINEERING DIVISION

GOVERNING SPECIFICATIONS
THE 2018 EDITION OF THE MINNESOTA DEPARTMENT OF TRANSPORTATION "STANDARD SPECIFICATIONS FOR CONSTRUCTION" SHALL GOVERN. AVAILABLE AT:
http://www.dot.state.mn.us/pre-letting/spec/index.html

THE 2019 EDITION OF THE CITY OF DULUTH PUBLIC WORKS AND UTILITIES DEPARTMENT STANDARD CONSTRUCTION SPECIFICATIONS
https://duluthmn.gov/engineering/standard-construction-specifications/

LOCATION: DULUTH, MINNESOTA
CONSTRUCTION PLANS FOR: LIFT STATION 15 RELOCATION
CITY PROJECT NUMBER: 1803

LEGEND

- EXISTING WATER MAIN
- EXISTING GATE VALVE & HYDRANT
- WATER SERVICE & CURB STOP
- PROPOSED WATERMAIN, VALVE, & HYDRANT
- PROPOSED WATER SERVICE & CURB STOP
- EXISTING SANITARY SEWER & MANHOLE
- EXISTING FORCEMAIN
- EXISTING STORM SEWER & INLET
- PROPOSED STORM SEWER & INLET
- PROPOSED MANHOLE & SEWER MAIN
- BURIED ELECTRIC
- BURIED GAS & VALVE
- BURIED CABLE TELEVISION
- BURIED TELEPHONE
- BURIED FIBER OPTICS
- RAILROAD TRACKS
- EXISTING CURB & GUTTER
- PROPOSED CURB & GUTTER
- EXISTING SIDEWALK
- PROPOSED SIDEWALK
- EXISTING CULVERT PIPE
- PROPOSED CULVERT PIPE
- FENCE LINE
- DRAINAGE ARROW
- SILT FENCE
- RIGHT-OF-WAY
- BASELINE
- PROPERTY LINE
- TREE LINE
- IRON PIPE
- IRON ROD
- CONTROL POINT
- UTILITY POLE & GUY
- SOIL BORING
- LIGHT POLE
- PEDESTAL
- STREET SIGN
- MAILBOX
- FLAGPOLE
- EROSION BALES
- TREE - DECIDUOUS
- TREE - CONIFEROUS
- TREE TO BE REMOVED

SITE LOCATION MAP
NO SCALE

THE SUBSURFACE UTILITY INFORMATION IN THIS PLAN IS UTILITY QUALITY LEVEL D. THIS QUALITY LEVEL WAS DETERMINED ACCORDING TO THE GUIDELINES OF CI/ASCE 38-.2, ENTITLED "STANDARD GUIDELINES FOR THE COLLECTION AND DEPICTION OF EXISTING SUBSURFACE UTILITY DATA."

SHEET INDEX

SHEET NO.	SHEET TITLE
G-1	TITLE SHEET
G-2	SYMBOLS AND ABBREVIATIONS
C-1	OVERALL SITE PLAN
C-2	EXISTING SITE PLAN
C-3	PROPOSED SITE GRADING PLAN
C-4	EROSION CONTROL PLAN
C-5	SWPPP NARRATIVE 1
C-6	SWPPP NARRATIVE 2
C-7	SWPPP NARRATIVE 3
C-8	PAVEMENT RESTORATION PLAN
C-9	YARD PIPING PLAN
C-10	SITE CIVIL DETAILS
C-11	SITE CIVIL DETAILS
C-12	SITE CIVIL DETAILS
C-13	SITE CIVIL DETAILS
C-14	SITE CIVIL DETAILS
C-15	SITE CIVIL DETAILS
C-16	SITE CIVIL DETAILS
PP-1	SANITARY PLAN & PROFILE
PP-2	SANITARY PLAN & PROFILE
PP-3	FORCE MAIN PLAN & PROFILE
PP-4	FORCE MAIN PLAN & PROFILE
TC-1	TITLE SHEET & ADVANCE SIGNING
TC-2	TRAFFIC CONTROL PLAN - STAGE 1
TC-3	TRAFFIC CONTROL PLAN - STAGE 2
RC-1	SITE CIVIL DEMOLITION
R-1	MECHANICAL DEMOLITION PLAN
R-2	MECHANICAL DEMOLITION PLAN
R-3	ELECTRICAL DEMOLITION PLAN
R-4	EXISTING FACILITY PHOTOS
R-5	EXISTING FACILITY PHOTOS
S-1	FOUNDATION PLAN
S-2	STRUCTURAL FLOOR PLAN
S-3	ROOF FRAMING PLAN
S-4	STRUCTURAL SECTION
S-5	WET WELL SECTION
S-6	STRUCTURAL DETAILS
S-7	STRUCTURAL DETAILS
A-1	PERSPECTIVES
A-2	FLOOR PLAN
A-3	EXTERIOR ELEVATIONS
A-4	CROSS SECTIONS

SHEET INDEX

SHEET NO.	SHEET TITLE
A-5	WALL SECTIONS
A-6	DETAILS
A-7	DETAILS
A-8	DETAILS & SCHEDULES
M-1	PROCESS MECHANICAL UPPER PLAN
M-2	PROCESS MECHANICAL LOWER PLAN
M-3	MECHANICAL SECTION
M-4	MECHANICAL SECTION
M-5	MECHANICAL SECTION
M-6	MECHANICAL SECTION
M-7	LIFT STATION DETAILS
M-8	TYPICAL DETAILS
P-1	PLUMBING FLOOR PLAN
H-1	MECHANICAL SYMBOLS AND ABBREVIATIONS
H-2	HVAC FLOOR PLAN
H-3	MECHANICAL SCHEDULES AND DETAILS
E-1	ELECTRICAL SYMBOLS AND ABBREVIATIONS
E-2	ELECTRICAL SYMBOLS AND ABBREVIATIONS
E-3	ELECTRICAL SYMBOLS AND ABBREVIATIONS
E-4	ELECTRICAL SITE PLAN
E-5	LIGHTING PLAN
E-6	POWER PLAN
E-7	INSTRUMENTATION PLAN
E-8	PANEL ELEVATION
E-9	ONE-LINE DIAGRAM NO.1
E-10	ONE-LINE DIAGRAM NO.2
E-11	P&ID - NO.1
E-12	P&ID - NO.2
E-13	ELECTRICAL SCHEDULES NO.1
E-14	ELECTRICAL SCHEDULES NO.2
E-15	DETAILS NO.1
E-16	DETAILS NO.2
E-17	DETAILS NO.3

THIS PLAN SET CONTAINS 75 SHEETS

WARNING
LOCATION OF UNDERGROUND UTILITIES TO BE VERIFIED BY CONTRACTOR
GOPHER STATE ONE CALL
CALL BEFORE DIGGING.
1-800-252-1166
REQUIRED BY LAW

I HEREBY CERTIFY THAT THIS PLAN WAS PREPARED BY ME OR UNDER MY DIRECT SUPERVISION AND THAT I AM A DULY LICENSED PROFESSIONAL ENGINEER UNDER THE LAWS OF THE STATE OF MINNESOTA.

PROJECT ENGINEER: ENGINEER'S NAME	DATE	LIC NO.
	1/10/2020	44287

CITY APPROVAL

Caroline Pedersen APPROVED	CHIEF ENGINEER OF TRANSPORTATION	DATE
Eric R. Shaffer APPROVED	CHIEF ENGINEER OF UTILITIES	1-21-20 DATE
Cindy Voigt APPROVED	CITY ENGINEER	1-21-20 DATE

PROJECT NO. 00616135	SCALE: AS SHOWN	NO.	DATE	REVISION
PROJECT DATE 1-10-2020	DRAWN BY			
F.B.	CHECKED BY SCR			

PLOT DATE 1/14/20. P:\610\616\00616135\CADD\Construction Drawings\0-General\00616135 Title Sheet.dwg

I HEREBY CERTIFY THAT THIS PLAN, REPORT OR SPECIFICATION WAS PREPARED BY ME OR UNDER MY DIRECT SUPERVISION AND THAT I AM A DULY LICENSED PROFESSIONAL ENGINEER UNDER THE LAWS OF THE STATE OF MINNESOTA.

1/10/2020 Date — 44287 License No.
SCOTT R CHILSON

MSA
ENGINEERING | ARCHITECTURE | SURVEYING
FUNDING | PLANNING | ENVIRONMENTAL
332 W Superior Street, Duluth MN 55802
(218) 722-3915 www.msa-ps.com

LIFT STATION 15 RELOCATION
CITY OF DULUTH, MINNESOTA
2114 W MICHIGAN STREET

TITLE SHEET

00616135

G-1

ABBREVIATIONS

A.B.	ANCHOR BOLT
ACOUST	ACOUSTIC(AL)
A/C	AIR CONDITIONER
ADJ	ADJACENT
A.F.F.	ABOVE FINISH FLOOR
ALP	AIR LIFT PUMP
ALT	ALTERNATE
ALUM	ALUMINUM
APPROX	APPROXIMATE(LY)
AVG	AVERAGE
B/	BOTTOM OF
B/T	BETWEEN
BD	BOARD
BF	BLIND FLANGE
BFP	BACKFLOW PREVENTER
BIT	BITUMINOUS PAVEMENT
BLDG	BUILDING
BLK	BLOCK
BLKG	BLOCKING
BM	BEAM
BRG	BEARING
BUR	BUILT UP ROOF
C.B.	CORNER BARS
C.J.	CONTROL JOINT
CL	CENTERLINE
CLG	CEILING
CMU	CONCRETE MASONRY UNIT
CO	CLEAN OUT
COL	COLUMN
CONC	CONCRETE
CONT	CONTINUOUS
CP	CONTROL POINT
CPVC	CHLORINATED POLYVINYL CHLORIDE
DBL	DOUBLE
DEG or °	DEGREE
DF	DRINKING FOUNTAIN
DI	DUCTILE IRON
DIA	DIAMETER
DIM	DIMENSION
DIP	DUCTILE IRON PIPE
DN	DOWN
DS	DOWN SPOUT
D.T.	DRAIN TILE
DWG	DRAWING
E.F.	EACH FACE
E.I.F.S.	EXTERIOR INSULATION FINISH SYSTEM
EA	EACH WAY
EB	ELBOW
ECC	ECCENTRIC
ELEC	ELECTRIC
EL	ELEVATION
EQ	EQUAL
EWC	ELECTRIC WATER COOLER
EXIST	EXISTING
EXP	EXPANSION
EXT	EXTERIOR
F.E.	FIRE EXTINGUISHER
F.D.	FLOOR DRAIN
FCA	FLANGED COUPLING ADAPTOR
FIN	FINISH(ED)
FLG	FLANGE
FLR	FLOOR
FM	FLOW METER
FOC	FACE OF CONCRETE
FOM	FACE OF MASONRY
FOS	FACE OF STUD
FT	FOOT OR FEET
FTG	FOOTING
GALV	GALVANIZED
GC	GENERAL CONTRACTOR
GPM	GALLON PER MINUTE
GYP	GYPSUM
GWB	GYPSUM WALL BOARD
H.B.	HOOKED BARS
H.D.	HOOKED DOWELS
HB	HOSE BIBB
HC	HANDICAP
HGT	HEIGHT
HM	HOLLOW METAL
HORIZ	HORIZONTAL
HTG	HEATING
HP	HIGH POINT
HWH	HOT WATER HEATER
HWL	HIGH WATER LEVEL
HVAC	HEATING/VENTILATING/ AIR CONDITIONING
I.F.	INSIDE FACE
ID	INSIDE DIAMETER
IE	INVERT ELEVATION
INSUL	INSULATION
INV	INVERT
JT	JOINT
LAV	LAVATORY
LP	LOW POINT
LR	LONG RADIUS
LS	LIFT STATION
LWL	LOW WATER LEVEL
MATL	MATERIAL
MAX	MAXIMUM
MECH	MECHANICAL
MFR	MANUFACTURER
MH	MANHOLE
MJ	MECHANICAL JOINT
MIN	MINIMUM
MO	MASONRY OPENING
MR	MOISTURE RESISTANT
MTD	MOUNTED
MTL	METAL
N.I.C.	NOT IN CONTRACT
NO. or #	NUMBER
NPW	NON-POTABLE WATER
N.T.S.	NOT TO SCALE
O.C.	ON CENTER
O.F.	OUTSIDE FACE
OD	OUTSIDE DIAMETER
OPP HD	OPPOSITE HAND
P.C.	PRECAST CONCRETE
P&ID	PROCESS AND INSTRUMENTATION DIAGRAM
PDF	POWER DRIVEN FASTENER
PCP	PRESTRESSED CONCRETE PIPE
PLBG	PLUMBING
PLWD	PLYWOOD
PNT.	PAINT(ED)
PRV	PRESSURE REDUCING VALVE
PSF	POUNDS PER SQUARE FOOT
PSI	POUNDS PER SQUARE INCH
PVC	POLYVINYL CHLORIDE
P.T.	PRESSURE TREATED
R.C.P.	REFLECTED CEILING PLAN
R.D.	ROOF DRAIN
RCP	REINFORCED CONCRETE PIPE
RED	REDUCER
REINF	REINFORCING OR REINFORCED
REQ'D	REQUIRED
RO	ROUGH OPENING
SG	SLUICE GATE
SIM	SIMILAR
SM	SHEET METAL
SPA	SPACED
SPECS	SPECIFICATIONS
SQ	SQUARE
SQ FT	SQUARE FOOT
SR	SHORT RADIUS
SS	SERVICE SINK
SST	STAINLESS STEEL
STD	STANDARD
STG	STOP GATE
STH	STATE HIGHWAY
STL	STEEL
SUSP	SUSPENDED
T&G	TONGUE & GROOVE
T/	TOP OF
T.O.F.	TOP OF FOOTING
TOC	TOP OF CONCRETE
TOG	TOP OF GRATING
TOW	TOP OF WALL
TP	TEST PIT
TYP	TYPICAL
UNEXC	UNEXCAVATED
UNO	UNLESS NOTED OTHERWISE
UV	UNIT VENTILATOR
VERT	VERTICAL
WD	WOOD
WH	WALL HYDRANT
W/	WITH
W/O	WITH OUT
WG	WEIR GATE
WL	WATER LEVEL
WT	WEIGHT
WWM	WIRE WELDED MESH
WWTF	WASTEWATER TREATMENT FACILITY
YR	YEAR

PLAN VIEW LABEL

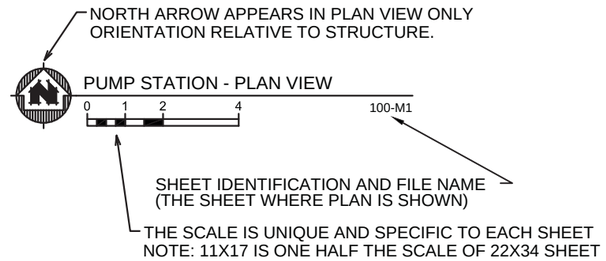

SHEET SYMBOLS

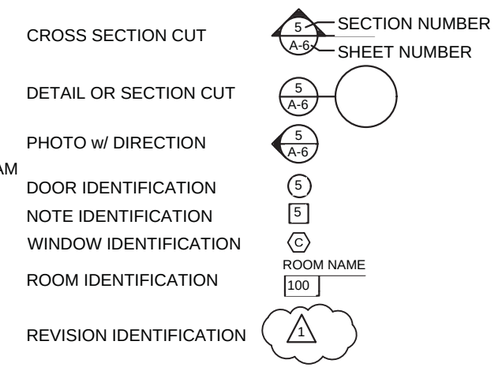

PROCESS SYMBOLS (M SHEETS)

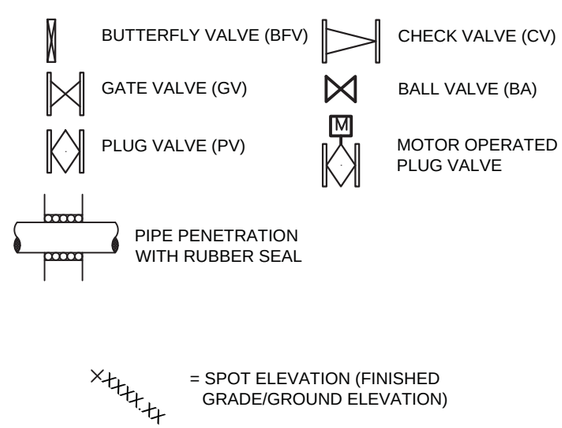

DISCIPLINE IDENTIFICATION & SHEET ORDER

DESIGNATION	DISCIPLINE
G	GENERAL
C	SITE CIVIL
PP	UTILITY PLAN & PROFILE
TC	TRAFFIC CONTROL
RC	SITE CIVIL REMOVAL/DEMOLITION
R	MEP REMOVAL/DEMOLITION
S	STRUCTURAL
A	ARCHITECTURAL
M	PROCESS MECHANICAL
P	PLUMBING
H	HVAC
E	ELECTRICAL

PROCESS PIPELINE INDENTIFIERS

AIR	AIR LOW PRESSURE
AL/FE	ALUM OR FERRIC CHEMICAL
ALK	ALKALINITY CHEMICAL
BYP	BYPASS
CHLOR	CHLORINATION CHEMICAL
CA	CAUSTIC SODA CHEMICAL
CHEM	CHEMICAL
D	DRAIN
DCT	DECANT
DECHLOR	DECHLORINATION
DS	DIGESTION FLUID
EFFL	EFFLUENT
EFFL FM	EFFLUENT FORCEMAIN
FCE	FINAL CLARIFIER EFFLUENT
FCI	FINAL CLARIFIER INFLUENT
FEI	FLOW EQUALIZATION INFLUENT
FER	FLOW EQUALIZATION RETURN
FIL	FILTRATE
FM	FORCEMAIN
G	GAS
HYPO	HYPOCHLORITE
INFL	INFLUENT
MI	MBBR INFLUENT
ML	MIXED LIQUOR
NG	NATURAL GAS
NPW	NON-POTABLE WATER
OF	OVERFLOW
OP	ORTHOPHOSPHATE
OXD	OXIDATION DITCH
PI	PRIMARY CLARIFIER INFLUENT
PLE	PLANT EFFLUENT WATER
POL	POLYMER CHEMICAL
RAS	RETURN ACTIVATED SLUDGE
RYC	RECYCLE
RET	RETURN SIDESTREAM
SAN	RAW WASTEWATER
SAM	SAMPLE
SCE	SECONDARY EFFLUENT
SEL	SELECTOR TANK
SI	SECONDARY INFLUENT
SL	SLUDGE
SS	STORM SEWER
TI	TRICKLING FILTER INFLUENT
TWAS	THICKENED WAS
V	VENT
W	POTABLE WATER
WAS	WASTE ACTIVATED SLUDGE

GENERAL NOTES

1. FOR CLARITY, IN A FEW INSTANCES WORK FOR A DISCIPLINE MAY BE SHOWN ON A SHEET WITH A DIFFERENT DISCIPLINE SHEET DESIGNATION. THE GENERAL CONTRACTOR IS REQUIRED TO PROVIDE A COMPLETE AND OPERABLE SYSTEM.
2. REFER TO ELECTRICAL DRAWINGS AND SCHEDULES FOR WORK REQUIRED FOR ALL ELECTRICAL AND CONTROL DEVICES.

I HEREBY CERTIFY THAT THIS PLAN, REPORT, OR SPECIFICATION WAS PREPARED BY ME OR UNDER MY DIRECT SUPERVISION AND THAT I AM A DULY LICENSED PROFESSIONAL ENGINEER UNDER THE LAWS OF THE STATE OF MINNESOTA.

1/10/2020 Date — 44287 License No.

SCOTT R CHILSON

MSA
ENGINEERING | ARCHITECTURE | SURVEYING
FUNDING | PLANNING | ENVIRONMENTAL
332 W Superior Street, Duluth MN 55802
(218) 722-3915 www.msa-ps.com

© MSA Professional Services, Inc.

LIFT STATION 15 RELOCATION
CITY OF DULUTH, MINNESOTA
2114 W MICHIGAN STREET

SYMBOLS AND ABBREVIATIONS

FILE NO. 00616135

SHEET G-2

BENCHMARK TABLE

BM. NO.	DESCRIPTION	ELEV.
BM1	MH 0310038 RIM	619.10
BM2	MH 0310018 RIM	618.95
BM3	MH 0310019 RIM	616.04
BM4	MH 0310035 RIM	613.62

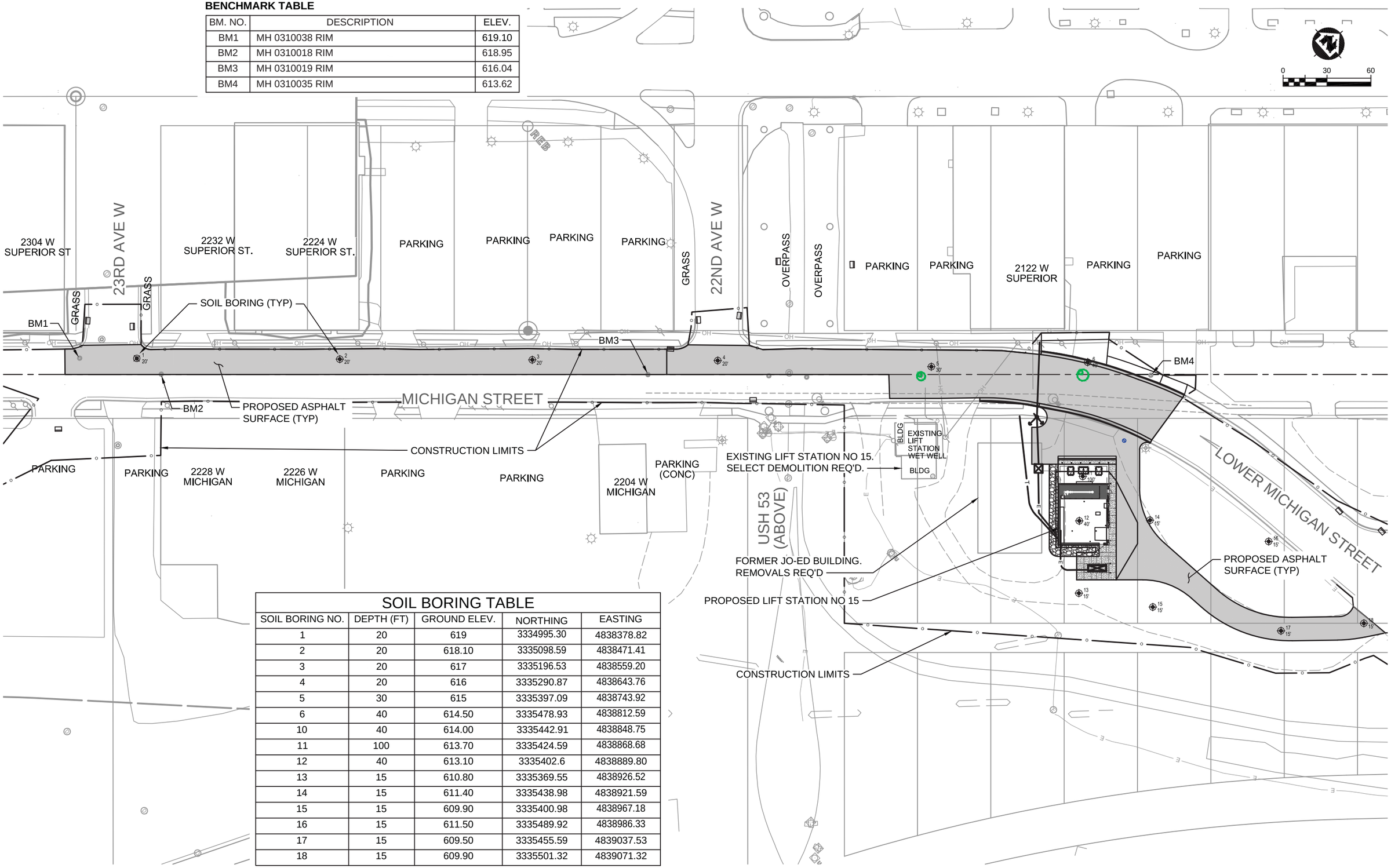

SOIL BORING TABLE

SOIL BORING NO.	DEPTH (FT)	GROUND ELEV.	NORTHING	EASTING
1	20	619	3334995.30	4838378.82
2	20	618.10	3335098.59	4838471.41
3	20	617	3335196.53	4838559.20
4	20	616	3335290.87	4838643.76
5	30	615	3335397.09	4838743.92
6	40	614.50	3335478.93	4838812.59
10	40	614.00	3335442.91	4838848.75
11	100	613.70	3335424.59	4838868.68
12	40	613.10	3335402.6	4838889.80
13	15	610.80	3335369.55	4838926.52
14	15	611.40	3335438.98	4838921.59
15	15	609.90	3335400.98	4838967.18
16	15	611.50	3335489.92	4838986.33
17	15	609.50	3335455.59	4839037.53
18	15	609.90	3335501.32	4839071.32

PROJECT NO.: 00616135	SCALE: AS SHOWN	NO.	DATE	REVISION	BY
PROJECT DATE: 1-10-2020	DRAWN BY:	.	.	.	.
F.B. : .	CHECKED BY: SCR	.	.	.	.
.	.	.	.	.	.

PLOT DATE: 1/14/20, P:\610s\61\00616135\CADD\Construction Drawings\2-Site Civil\00616135 Overall Plan.dwg

I HEREBY CERTIFY THAT THIS PLAN, REPORT, OR SPECIFICATION WAS PREPARED BY ME OR UNDER MY DIRECT SUPERVISION AND THAT I AM A DULY LICENSED PROFESSIONAL ENGINEER UNDER THE LAWS OF THE STATE OF MINNESOTA.

1/10/2020 Date — 44287 License No.

SCOTT R CHILSON

MSA

ENGINEERING | ARCHITECTURE | SURVEYING
FUNDING | PLANNING | ENVIRONMENTAL
332 W Superior Street, Duluth MN 55802
(218) 722-3915 www.msa-ps.com

© MSA Professional Services, Inc.

LIFT STATION 15 RELOCATION
CITY OF DULUTH, MINNESOTA
2114 W MICHIGAN STREET

OVERALL SITE PLAN

FILE NO. 00616135

SHEET C-1

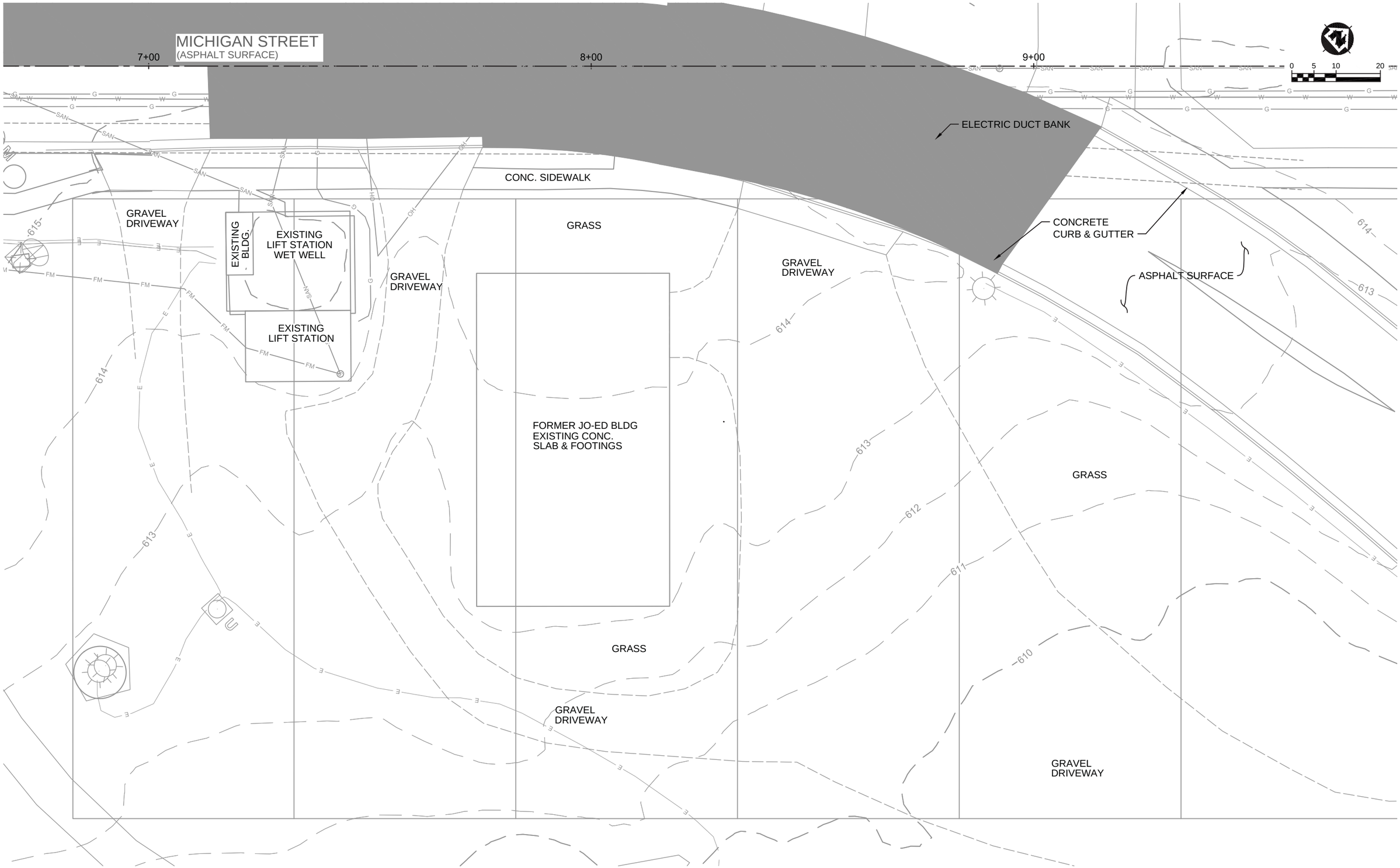

PROJECT NO.: 00616135	SCALE: AS SHOWN	NO.	DATE	REVISION	BY
PROJECT DATE: 1-10-2020	DRAWN BY:	.	.	.	.
F.B.: .	CHECKED BY: SCR	.	.	.	.
.	.	.	.	.	.

PLOT DATE: 1/14/20, P:\610s\616\00616135\CADD\Construction Drawings\2-Site Civil\00616135 Site Plan.dwg

I HEREBY CERTIFY THAT THIS PLAN, REPORT, OR SPECIFICATION WAS PREPARED BY ME OR UNDER MY DIRECT SUPERVISION AND THAT I AM A DULY LICENSED PROFESSIONAL ENGINEER UNDER THE LAWS OF THE STATE OF MINNESOTA.

1/10/2020 Date

44287 License No.

SCOTT R CHILSON

MSA

ENGINEERING | ARCHITECTURE | SURVEYING
FUNDING | PLANNING | ENVIRONMENTAL
332 W Superior Street, Duluth MN 55802
(218) 722-3915 www.msa-ps.com

© MSA Professional Services, Inc.

LIFT STATION 15 RELOCATION
CITY OF DULUTH, MINNESOTA
2114 W MICHIGAN STREET

EXISTING SITE PLAN

FILE NO. 00616135

SHEET C-2

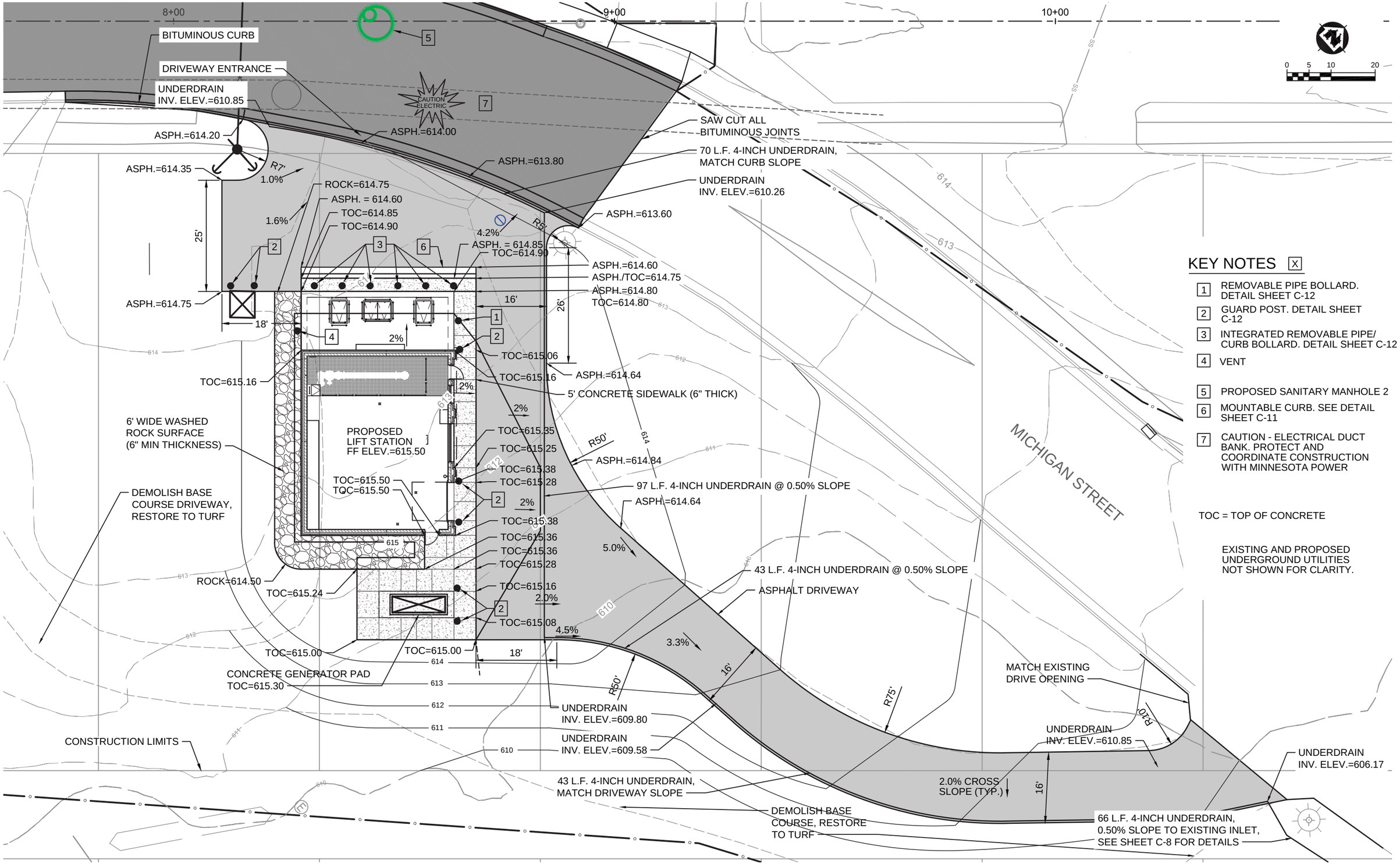

KEY NOTES [X]

1. REMOVABLE PIPE BOLLARD. DETAIL SHEET C-12
2. GUARD POST. DETAIL SHEET C-12
3. INTEGRATED REMOVABLE PIPE/ CURB BOLLARD. DETAIL SHEET C-12
4. VENT
5. PROPOSED SANITARY MANHOLE 2
6. MOUNTABLE CURB. SEE DETAIL SHEET C-11
7. CAUTION - ELECTRICAL DUCT BANK. PROTECT AND COORDINATE CONSTRUCTION WITH MINNESOTA POWER

TOC = TOP OF CONCRETE

EXISTING AND PROPOSED UNDERGROUND UTILITIES NOT SHOWN FOR CLARITY.

PROJECT NO.: 00616135	SCALE: AS SHOWN	NO.	DATE	REVISION	BY
PROJECT DATE: 1-10-2020	DRAWN BY: -	-	-	-	-
F.B.: -	CHECKED BY: SCR	-	-	-	-
-	-	-	-	-	-
PLOT DATE: 1/14/20, P:\610s\616\00616135\CADD\Construction Drawings\2-Site Civil\00616135 Site Plan.dwg					

I HEREBY CERTIFY THAT THIS PLAN, REPORT, OR SPECIFICATION WAS PREPARED BY ME OR UNDER MY DIRECT SUPERVISION AND THAT I AM A DULY LICENSED PROFESSIONAL ENGINEER UNDER THE LAWS OF THE STATE OF MINNESOTA.

1/10/2020 Date — 44287 License No.

SCOTT R CHILSON

MSA

ENGINEERING | ARCHITECTURE | SURVEYING
FUNDING | PLANNING | ENVIRONMENTAL
332 W Superior Street, Duluth MN 55802
(218) 722-3915 www.msa-ps.com

© MSA Professional Services, Inc.

LIFT STATION 15 RELOCATION
CITY OF DULUTH, MINNESOTA
2114 W MICHIGAN STREET

PROPOSED SITE GRADING PLAN

FILE NO. 00616135

SHEET C-3

RESTORATION NOTES:

1. RESTORATION OF DISTURBED PERVIOUS AREAS TO BE IN CONFORMANCE TO CITY OF DULUTH SPECIFICATIONS.

2. IN GENERAL RESTORATION TO CONSIST OF:

2.1. 4" OF TOPSOIL
2.2. SEED, MIXTURE 25-151, TO BE APPLIED AT 120 POUNDS PER ACRE
2.3. FERTILIZER, TYPE 3, TO BE APPLIED AT 350 POUNDS PER ACRE
2.4. HYDRAULIC MATRIX, TYPE FRM, TO BE APPLIED AT 3,900 POUNDS PER ACRE

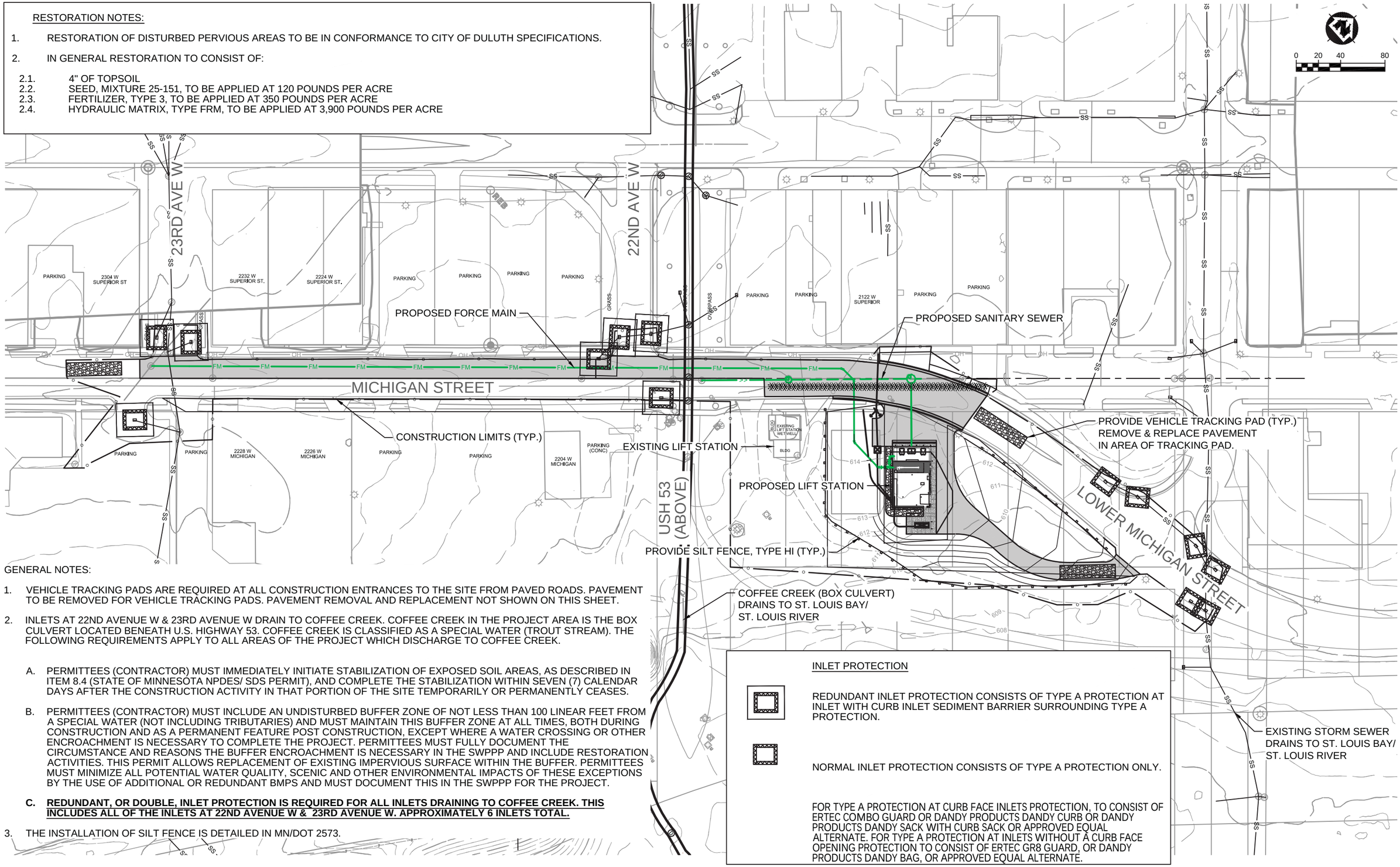

GENERAL NOTES:

1. VEHICLE TRACKING PADS ARE REQUIRED AT ALL CONSTRUCTION ENTRANCES TO THE SITE FROM PAVED ROADS. PAVEMENT TO BE REMOVED FOR VEHICLE TRACKING PADS. PAVEMENT REMOVAL AND REPLACEMENT NOT SHOWN ON THIS SHEET.

2. INLETS AT 22ND AVENUE W & 23RD AVENUE W DRAIN TO COFFEE CREEK. COFFEE CREEK IN THE PROJECT AREA IS THE BOX CULVERT LOCATED BENEATH U.S. HIGHWAY 53. COFFEE CREEK IS CLASSIFIED AS A SPECIAL WATER (TROUT STREAM). THE FOLLOWING REQUIREMENTS APPLY TO ALL AREAS OF THE PROJECT WHICH DISCHARGE TO COFFEE CREEK.

   A. PERMITTEES (CONTRACTOR) MUST IMMEDIATELY INITIATE STABILIZATION OF EXPOSED SOIL AREAS, AS DESCRIBED IN ITEM 8.4 (STATE OF MINNESOTA NPDES/ SDS PERMIT), AND COMPLETE THE STABILIZATION WITHIN SEVEN (7) CALENDAR DAYS AFTER THE CONSTRUCTION ACTIVITY IN THAT PORTION OF THE SITE TEMPORARILY OR PERMANENTLY CEASES.

   B. PERMITTEES (CONTRACTOR) MUST INCLUDE AN UNDISTURBED BUFFER ZONE OF NOT LESS THAN 100 LINEAR FEET FROM A SPECIAL WATER (NOT INCLUDING TRIBUTARIES) AND MUST MAINTAIN THIS BUFFER ZONE AT ALL TIMES, BOTH DURING CONSTRUCTION AND AS A PERMANENT FEATURE POST CONSTRUCTION, EXCEPT WHERE A WATER CROSSING OR OTHER ENCROACHMENT IS NECESSARY TO COMPLETE THE PROJECT. PERMITTEES MUST FULLY DOCUMENT THE CIRCUMSTANCE AND REASONS THE BUFFER ENCROACHMENT IS NECESSARY IN THE SWPPP AND INCLUDE RESTORATION ACTIVITIES. THIS PERMIT ALLOWS REPLACEMENT OF EXISTING IMPERVIOUS SURFACE WITHIN THE BUFFER. PERMITTEES MUST MINIMIZE ALL POTENTIAL WATER QUALITY, SCENIC AND OTHER ENVIRONMENTAL IMPACTS OF THESE EXCEPTIONS BY THE USE OF ADDITIONAL OR REDUNDANT BMPS AND MUST DOCUMENT THIS IN THE SWPPP FOR THE PROJECT.

   C. REDUNDANT, OR DOUBLE, INLET PROTECTION IS REQUIRED FOR ALL INLETS DRAINING TO COFFEE CREEK. THIS INCLUDES ALL OF THE INLETS AT 22ND AVENUE W & 23RD AVENUE W. APPROXIMATELY 6 INLETS TOTAL.

3. THE INSTALLATION OF SILT FENCE IS DETAILED IN MN/DOT 2573.

PROJECT NO.:	00616135	SCALE: AS SHOWN	NO.	DATE	REVISION	BY
PROJECT DATE:	1-10-2020	DRAWN BY: -	.	.	.	.
F.B. :	.	CHECKED BY: SCR	.	.	.	.
.	.	.	.	.	.	.

PLOT DATE: 1/14/20. P:\610s\616\00616135\CADD\Construction Drawings\2-Site Civil\00616135 Erosion Control Plan.dwg

I HEREBY CERTIFY THAT THIS PLAN, REPORT, OR SPECIFICATION WAS PREPARED BY ME OR UNDER MY DIRECT SUPERVISION AND THAT I AM A DULY LICENSED PROFESSIONAL ENGINEER UNDER THE LAWS OF THE STATE OF MINNESOTA.

1/10/2020 Date — 56425 License No.

Andrew Barnebey

ANDREW K BARNEBEY

MSA

ENGINEERING | ARCHITECTURE | SURVEYING
FUNDING | PLANNING | ENVIRONMENTAL
332 W Superior Street, Duluth MN 55802
(218) 722-3915 www.msa-ps.com

© MSA Professional Services, Inc.

LIFT STATION 15 RELOCATION
CITY OF DULUTH, MINNESOTA
2114 W MICHIGAN STREET

EROSION CONTROL PLAN

FILE NO. 00616135

SHEET C-4

STORM WATER POLLUTION PREVENTION PLAN (SWPPP) NARRATIVE

PROJECT DESCRIPTION

LIFT STATION 15 IS LOCATED IN WEST DULUTH ON LOWER MICHIGAN STREET JUST NORTH EAST US US HIGHWAY 53 IN THE CITY OF DULUTH IN ST. LOUIS COUNTY, MN. WORK WILL CONSIST OF ABANDONMENT/ DEMOLITION OF AN EXISTING LIFT STATION, CONSTRUCTION OF A NEW LIFT STATION, WITH ASSOCIATED SERVICES AND SITE WORK, CONSTRUCTION OF A NEW FORCE MAIN SEWER, AND CONNECTIONS OF NEW AND EXISTING SEWERS. SITE RESTORATION WILL CONSIST OF NEW ASPHALT PAVEMENT AND SEEDING OF DISTURBED AND DEMOLISHED AREAS. LITTLE TO NO NEW IMPERVIOUS SURFACES WILL BE CREATED AS A PART OF THIS PROJECT.

SPECIAL AND IMPAIRED WATERS

THE RECEIVING WATERS FOR STORM WATER RUNOFF ON THIS PROJECT ARE COFFEE CREEK AND THE ST. LOUIS RIVER. STORMWATER FROM THE WESTERN PORTION OF THE SITE WILL FLOW INTO THE MUNICIPAL STORM SEWER AND THEN BE DISCHARGED VIA COFFEE CREEK TO THE ST. LOUIS RIVER. WATER FROM THE EASTERN PORTION OF THE SITE WILL FLOW OVERLAND TOWARD THE ST. LOUIS RIVER. LIKELY MUCH OF THIS WATER WILL BE INFILTRATED PRIOR TO REACHING THE RIVER. **COFFEE CREEK IS LISTED AS A TROUT STREAM AND THE ST. LOUIS RIVER HAS AN MPCA IDENTIFIED IMPAIRMENT FOR MERCURY AND PCB IN FISH TISSUE.**

SPECIAL BMP'S AND A SITE MANAGEMENT PLAN AREA REQUIRED FOR CONSTRUCTION ACTIVITIES ON THIS SITE.

LAND FEATURE CHANGES

TOTAL DISTURBED AREA =	**1.76**	**ACRES**
TOTAL EXISTING IMPERVIOUS AREA =	**95% ASSUMED**	**1.67 ACRES**
TOTAL PROPOSED IMPERVIOUS AREA =	**92% ASSUMED**	**1.62 ACRES**
TOTAL NET CHANGE IN IMPERVIOUS AREAS =	**-.05 ACRES**	

THE PROPOSED NEW STRUCTURES ARE WITHIN AN EXISTING GRAVEL DRIVE/ PARKING AREA (IMPERVIOUS) SO NO NEW IMPERVIOUS WILL BE CREATED WITH THE NEW CONSTRUCTION. SOME EXISTING BUILDINGS AND EXISTING GRAVEL DRIVES/ PARKING AREAS WILL BE REMOVED BY OTHERS (NOT A PART OF THIS CONTRACT). WITH THE REMOVALS AND RESTORATION OF SOME ITEMS NOT A PART OF THIS CONTRACT IT IS IMPOSSIBLE TO ACCURATELY QUANTIFY THE REDUCTION IN IMPERVIOUS AREA. ASSUMED QUANTITIES NOTED ABOVE.

LONG TERM MAINTENANCE AND OPERATION

THE CITY OF DULUTH IS RESPONSIBLE FOR THE LONG TERM MAINTENANCE AND OPERATION, EXCLUSIVE OF THE CONTRACTOR WARRANTY PERIOD, OF THE PERMANENT STORM WATER SYSTEM INSTALLED ON THIS PROJECT.
OWNER & RECORDS RETENTION: CITY OF DULUTH - ENGINEERING DEPARTMENT - 218-730-5200, CITY HALL ROOM 211, 411 WEST FIRST STREET, DULUTH, MN 55802

PROJECT PERSONNEL, TRAINING, AND AMENDING THE SWPPP

1. THIS SWPPP WAS PREPARED BY PERSONNEL THAT ARE CERTIFIED IN THE DESIGN OF CONSTRUCTION SWPPP BY THE UNIVERSITY OF MINNESOTA EROSION AND SEDIMENT CONTROL PROGRAM. CURRENT CERTIFICATION CARDS AND CERTIFICATES OF TRAINING ATTENDANCE ARE ON FILE WITH MSA PROFESSIONAL SERVICES INC. AND ARE AVAILABLE UPON REQUEST.

2. PURSUANT TO MNDOT SPECIFICATION 1717.2A: **THE CONTRACTOR SHALL IMPLEMENT THE PROJECT'S STORM WATER POLLUTION PREVENTION PLAN.**

3. PURSUANT TO MNDOT SPECIFICATION 2573.3A1: **THE CONTRACTOR SHALL PROVIDE A CERTIFIED EROSION CONTROL SUPERVISOR IN GOOD STANDING WHO IS KNOWLEDGEABLE AND EXPERIENCED IN THE APPLICATION OF EROSION AND SEDIMENT CONTROL BEST MANAGEMENT PRACTICES.** THE EROSION CONTROL SUPERVISOR WILL WORK WITH THE CITY OF DULUTH AND ITS DESIGNATED FIELD STAFF TO OVERSEE THE IMPLEMENTATION OF THE SWPPP AND INSTALLATION, INSPECTION, AND MAINTENANCE OF THE EROSION PREVENTION/SEDIMENT CONTROL BMPS. THIS SHALL BE DONE BEFORE, DURING, AND AFTER CONSTRUCTION UNTIL THE NOTICE OF TERMINATION (NOT) HAS BEEN FILED WITH THE MPCA. **PROVIDE PROOF OF CERTIFICATION AT THE PRE-CONSTRUCTION MEETING. WORK WILL NOT BE ALLOWED TO COMMENCE UNTIL PROOF OF CERTIFICATION HAS BEEN PROVIDED TO THE CITY OF DULUTH AND ITS DESIGNATED FIELD STAFF.**

4. **PROVIDE AT** LEAST ONE CERTIFIED INSTALLER FOR EACH CONTRACTOR OR SUBCONTRACTOR THAT INSTALLS THE PRODUCTS LISTED IN SECTION 2573.3.A.2 OF THE MINNESOTA DEPARTMENT OF TRANSPORTATION STANDARD SPECIFICATIONS FOR CONSTRUCTION, 2018 EDITION. **PROVIDE PROOF OF CERTIFICATION AT THE PRE-CONSTRUCTION MEETING. WORK WILL NOT BE ALLOWED TO COMMENCE UNTIL PROOF OF CERTIFICATION HAS BEEN PROVIDED TO THE CITY OF DULUTH AND ITS DESIGNATED FIELD STAFF.**

5. ANY AMENDMENTS TO THE SWPPP SHALL BE COMPLETED BY THE CONTRACTOR'S QUALIFIED INDIVIDUAL AS DESCRIBED IN SECTIONS 21.2.A AND 21.2.B OF THE "TRAINING REQUIREMENTS" PORTION OF THE NPDES PERMIT. THESE SHALL BE SUBMITTED TO THE OWNER FOR APPROVAL BY THE ENGINEER (OR DESIGNATED REPRESENTATIVE).

6. THE SWPPP MUST BE AMENDED TO DOCUMENT ANY ADDITIONAL OR MODIFIED BMPS USED TO CORRECT PROBLEMS OR ADDRESS NEW SITE CONDITIONS AS A RESULT OF CHANGES TO DESIGN, CONSTRUCTION, OPERATION, MAINTENANCE, WEATHER OR SEASONAL CONDITIONS.

7. THE SWPPP MUST BE AMENDED TO DOCUMENT ADDITIONAL OR MODIFIED BMPS USED TO CORRECT PROBLEMS IDENTIFIED AS A RESULT OF INSPECTIONS/INVESTIGATIONS BY THE OWNER, USEPA, OR MPCA OFFICIALS INDICATING THE CURRENT SWPPP IS INEFFECTIVE IN CONTROLLING EROSION AND PREVENTING POLLUTION.

8. THE SWPPP DOCUMENT, ALL APPROVED CHANGES, PROJECT MANUAL, AND INSPECTION REPORTS MUST BE KEPT AT THE SITE DURING CONSTRUCTION BY THE CONTRACTOR. THE SWPPP DOCUMENTS CAN BE KEPT IN A FIELD OFFICE OR ON-SITE VEHICLE DURING NORMAL WORKING HOURS.

PROJECT CONTACTS

MPCA DUTY OFFICE 24 HOUR EMERGENCY NOTIFICATION:
651-649-5451 OR 800-422-0798

ORGANIZATION	PERMIT	CONTACT NAME	PHONE/EMAIL
CONTRACTOR'S EROSION CONTROL SUPERVISOR	N/A	TO BE COMPLETED AFTER AWARD	TO BE COMPLETED AFTER AWARD
MINNESOTA POLLUTION CONTROL AGENCY (MPCA)	NPDES	JIM DEXTER	218-529-6253 james.dexter@pca.state.mn.us
SOIL AND WATER CONSERVATION DISTRICT (SWCD)	WCA	RC BOHEIM	218-723-4629 RC.Boheim@southstlouisswcd.org
OFFICE OF ENVIRONMENTAL STEWARDSHIP, DISTRICT 1	N/A	DWAYNE STENLUND	651-366-3625
MNDNR AREA HYDROLOGIST	N/A	PATRICIA FOWLER	218-834-6621 patricia.fowler@dnr.state.mn.us
CORP OF ENGINEERS	SECTION 404	KRIS LAMAN	218-788-6409 Kristoffer.A.Laman@usace.army.mil
CITY OF DULUTH REVIEW	EROSION & SEDIMENT CONTROL	TOM JOHNSON	218-730-5103 tajohnson@duluthmn.gov
LGU - CITY OF DULUTH	N/A	KYLE DEMING	218-730-5580 kdeming@duluthmn.gov
CITY OF DULUTH SOLID WASTE OFFICER	N/A	KAREN O'DONNELL	218-730-5148 kodonnell@duluthmn.gov

CHAIN OF RESPONSIBILITY

THE CITY OF DULUTH, THE CONTRACTOR, AND ALL ASSOCIATED SUB-CONTRACTORS INVOLVED IN SITE SOIL DISTURBANCE ACTIVITIES ARE CO-PERMITEES FOR THE NATIONAL POLLUTION DISCHARGE ELIMINATION SYSTEM (NPDES) CONSTRUCTION PERMIT. THE CONTRACTOR IS RESPONSIBLE TO COMPLY WITH ALL ASPECTS OF THE NPDES CONSTRUCTION PERMIT AT ALL TIMES UNTIL THE NOTICE OF TERMINATION (NOT) HAS BEEN FILED WITH THE MPCA. THE CONTRACTOR SHALL DEVELOP A CHAIN OF COMMAND WITH ALL OPERATIONS ON THE SITE TO ENSURE THAT THE SWPPP WILL BE IMPLEMENTED AND STAY IN EFFECT UNTIL CONSTRUCTION IS COMPLETE, THE ENTIRE SITE HAS UNDERGONE FINAL STABILIZATION, AND A NOTICE OF TERMINATION (NOT) HAS BEEN SUBMITTED TO THE MPCA.

LOCATION OF SWPPP REQUIREMENTS

THE REQUIRED SWPPP ELEMENTS MAY BE LOCATED IN MULTIPLE PLACES WITHIN THIS PLAN SET AS WELL AS IN THE PROJECT SPECIAL PROVISIONS, MINNESOTA DEPARTMENT OF TRANSPORTATION STANDARD SPECIFICATIONS FOR CONSTRUCTION, 2018 EDITION, THE CITY OF DULUTH'S CONSTRUCTION STANDARDS (LATEST EDITION), OR ON FILE WITH THE CITY OF DULUTH. THE NOTES AND TABLE BELOW ARE INTENDED TO BE A REFERENCE GUIDE FOR THE CONTRACTOR AND FIELD STAFF. THERE MAY BE ADDITIONAL REQUIRED SWPPP ELEMENTS INCLUDED ON THE PROJECT THAT ARE NOT LISTED ON THESE SHEETS.

DESCRIPTION	TITLE	LOCATION
SUMMARY OF PERVIOUS & IMPERVIOUS	SWPPP NARRATIVE	SHEET C-5
DIRECTION OF FLOW AND DRAINAGE AREA	SWPPP NARRATIVE	SHEET C-5
RECEIVING SURFACE WATERS	SWPPP NARRATIVE	SHEET C-7
NO DISTURBANCE AREAS AND AREAS OF CONSTRUCTION	EROSION CONTRAL PLAN	SHEET C-4
DRAINAGE STRUCTURES	NA	NA
DRAINAGE TABULATIONS	NA	NA
EROSION CONTROL TABULATIONS	SWPPP NARRATIVE	SHEET C-7
EROSION CONTROL SHEETS	EROSION CONTROL PLAN	SHEET C-4
EROSION CONTROL DETAILS	SITE CIVIL DETAILS	SHEETS C-11
EROSION AND SEDIMENT CONTROL BEST PRACTICES	SWPPP NARRATIVE	SHEETS C-6
FINAL STABILIZATION	EROSION CONTROL PLAN	SHEET C-4

SITE INSPECTION AND MAINTENANCE

INSPECT THE ENTIRE CONSTRUCTION SITE A MINIMUM OF ONCE EVERY SEVEN DAYS DURING ACTIVE CONSTRUCTION AND WITHIN 24 HOURS AFTER A RAINFALL EVENT GREATER THAN 0.5 INCHES IN 24 HOURS. INSPECT ALL TEMPORARY AND PERMANENT WATER QUALITY MANAGEMENT, EROSION PREVENTION, AND SEDIMENT CONTROL BMPS UNTIL THE SITE HAS UNDERGONE FINAL STABILIZATION AND THE NOTICE OF TERMINATION HAS BEEN SUBMITTED. INSPECT SURFACE WATER INCLUDING DRAINAGE DITCHES FOR SIGNS OF EROSION AND SEDIMENT DEPOSITION. INSPECT THE CONSTRUCTION SITE VEHICLE EXIT LOCATIONS FOR EVIDENCE OF TRACKING ONTO PAVED SURFACES. INSPECT SURROUNDING PROPERTIES FOR EVIDENCE OF OFF SITE SEDIMENT ACCUMULATION. INSPECT INFILTRATION AREAS FOR SIGNS OF SEDIMENT DEPOSITION AND COMPACTION (TO ENSURE THAT EQUIPMENT IS NOT BEING DRIVEN ACROSS THE AREA.)

TRAINED INDIVIDUAL PERFORMING SITE INSPECTIONS (TO BE COMPLETED BY CONTRACTOR AFTER AWARD)

NAME:
COMPANY:
TRAINING CERTIFICATION:
EXPIRATION:
TRAINING ENTITY:

RECORD ALL INSPECTIONS AND MAINTENANCE ACTIVITIES IN WRITING WITHIN 24 HOURS. SUBMIT INSPECTION REPORTS IN A FORMAT THAT IS ACCEPTABLE TO THE ON SITE ENGINEER. RAINFALL AMOUNTS MUST BE OBTAINED BY A PROPERLY MAINTAINED RAIN GAUGE INSTALLED ON SITE, A WEATER STATION WITHIN 1 MILE OR BY A WEATHER REPORTING SYSTEM. INCLUDE THE FOLLOWING IN THE RECORDS OF EACH INSPECTION AND MAINTENANCE ACTIVITY:

A. DATE AND TIME OF INSPECTIONS
B. NAME OF PERSONS CONDUCTING INSPECTIONS
C. FINDINGS OF INSPECTIONS, INCLUDING RECOMMENDATIONS FOR CORRECTIVE ACTIONS.
D. CORRECTIVE ACTIONS TAKEN, INCLUDING DATES, TIMES, AND PARTY COMPLETING MAINTENANCE ACTIVITIES.
E. DATE AND AMOUNT OF ALL RAINFALL EVENTS GREATER THAN 0.5 INCHES IN 24 HOURS.
F. DOCUMENTS AND CHANGES MADE TO THE SWPPP.
G. PHOTOGRAPHS OF FINDINGS

REPLACE, REPAIR, OR SUPPLEMENT ALL NONFUNCTIONAL BMPS BY THE END OF THE NEXT BUSINESS DAY FOLLOWING DISCOVERY UNLESS LISTED DIFFERENTLY BELOW:

A. REPAIR, REPLACE, OR SUPPLEMENT PERIMETER CONTROL DEVICES WHEN IT BECOMES NONFUNCTIONAL OR SEDIMENT REACHES HALF THE HEIGHT OF THE DEVICE. COMPLETE REPAIRS BY THE END OF THE NEXT BUSINESS DAY FOLLOWING DISCOVERY.
B. REPAIR, REPLACE, OR SUPPLEMENT INLET CONTROL DEVICES WHEN IT BECOMES NONFUNCTIONAL OR SEDIMENT REACHES HALF THE HEIGHT AND/OR DEPTH OF THE DEVICE.
C. DRAIN AND REMOVE SEDIMENT FROM TEMPORARY AND PERMANENT SEDIMENT BASINS ONCE THE SEDIMENT HAS REACHED HALF THE STORAGE VOLUME. COMPLETE THIS WORK WITHIN 72 HOURS OF DISCOVERY.

SITE MAP (EXISTING AND FINAL GRADES WITH DRAINAGE AREAS)

THIS PROJECT DOES NOT REQUIRE PERMANENT POST CONSTRUCTION STORMWATER BMP'S BECAUSE THERE IS NO NET IMPERVIOUS AREA INCREASE. FURTHER, THE AREA IN WHICH THIS PROJECTS IS TO BE CONSTRUCTED IS IN A HIGHLY DEVELOPED URBAN AREA, AND THE EXISTING DRAINAGE PATTERNS WILL BE MAINTAINED. THESE ARE AS FOLLOWS:

THE SIX CATCHBASINS ON OR NEAR MICHIGAN STREET BY 23RD & 22ND AVENUES WEST ALL FLOW VIA EXISTING MUNICIPAL STORM SEWER TO COFFEE CREEK. IN THE AREA OF THE PROJECT COFFEE CREEK FLOWS WITHIN A MUNICIPAL CONCRETE BOX CULVERT. COFFEE CREEK IS CLASSIFIED AS A TROUT STREAM. IT WILL BE IMPOSSIBLE TO MAINTAIN A 100' BUFFER WITH COFFEE CREEK FOR THIS PROJECT SO REDUNDANT, OR DOUBLE, INLET PROTECTION BMP'S WILL BE EMPLOYED FOR THESE SEVEN CATCHBASINS.

THE SIX CATCHBASINS ON OR NEAR LOWER MICHIGAN STREET BY 21ST AVENUE WEST FLOW TO A MUNICIPAL STORM SEWER WHICH DISCHARGES DIRECTLY TO ST. LOUIS BAY/ ST. LOUIS RIVER. THESE SIX CATCHBASINS WILL EMPLOY SINGLE NON-REDUNDANT STORMWATER BMP'S TO PREVENT SEDIMENT FROM LEAVING THE SITE.

FOR THE AREA OF THE NEW LIFT STATION THE NORTHWEST PART OF THE SITE FLOWS TO MICHIGAN/ LOWER MICHIGAN STREET, WHILE THE SOUTHEAST PORTION FLOWS OVERLAND TOWARDS ST. LOUIS BAY/ ST. LOUIS RIVER. SILT FENCING WILL BE USED TO PREVENT SEDIMENT FROM LEAVING THE SITE IN THESE AREAS.

© MSA Professional Services, Inc.

STORM WATER POLLUTION PREVENTION PLAN (SWPPP) NARRATIVE (CONTINUED)

A. REMOVE ALL DELTAS AND SEDIMENT DEPOSITED IN SURFACE WATERS INCLUDING DRAINAGE WAYS, CATCH BASINS, AND OTHER DRAINAGE SYSTEMS. RE-STABILIZE ANY AREAS THAT ARE DISTURBED BY SEDIMENT REMOVAL OPERATIONS. SEDIMENT REMOVAL AND STABILIZATION MUST BE COMPLETED WITHIN 7 DAYS OF DISCOVERY. PREPARE AND SUBMIT A SITE MANAGEMENT PLAN FOR WORKING IN SURFACE WATERS. CONTACT ALL APPROPRIATE AUTHORITIES PRIOR TO WORKING IN SURFACE WATERS.

B. REMOVE TRACKED SEDIMENT FROM PAVED SURFACES BOTH ON AND OFF SITE WITHIN 24 HOURS OF DISCOVERY. STREET SWEEPING MAY HAVE TO OCCUR MORE OFTEN TO MINIMIZE OFF SITE IMPACTS. LIGHTLY WET THE PAVEMENT PRIOR TO SWEEPING.

C. MAINTAIN ALL BMPS UNTIL WORK HAS BEEN COMPLETED, SITE HAS GONE UNDER FINAL STABILIZATION, AND THE NOTICE OF TERMINATION (NOT) HAS BEEN SUBMITTED TO THE MPCA.

ANTICIPATED CONSTRUCTION SEQUENCE AND INSTALLATION OF EROSION AND SEDIMENT CONTROL BMPS

OUTLINED BELOW IS THE ANTICIPATED SEQUENCE OF CONSTRUCTION ACTIVITIES ALONG WITH THE REQUIRED BMPS. THIS ORDER DOES NOT NECESSARILY IMPLY THAT ONE ACTIVITY WILL BE COMPLETE BEFORE THE NEXT ONE BEGINS OR LIMIT THE CONTRACTOR TO THIS ONE SEQUENCE. THIS ORDER MAY BE MODIFIED IN THE FIELD DUE TO SITE CONDITIONS.

1. INSTALL PERIMETER CONTROLS DOWN GRADIENT FROM SOIL DISTURBANCE AREAS.
2. CLEAR AND GRUB AREAS AS NEEDED TO FACILITATE GRADING ACTIVITIES.
3. INSTALL PROPOSED UNDERGROUND UTILITIES AS INDICATED IN PLANS.
4. BEGIN ROADWAY FINE GRADING AND ROADWAY SECTION CONSTRUCTION
5. INSTALL CURB AND GUTTER AND PERMANENT STORM WATER MANAGEMENT SYSTEMS, MAINTAIN INLET CONTROLS
6. CONSTRUCT PROPOSED IMPERVIOUS SURFACES
7. FINAL STABILIZATION OF DISTURBED AREAS SHALL BEGIN IMMEDIATELY AFTER FINAL GRADING HAS OCCURRED ADDITIONAL FINAL STABILIZATION WILL BE NEEDED AFTER CONSTRUCTION OF SURFACING ITEMS (CURB & GUTTER, BITUMINOUS PAVEMENT) IS COMPLETE.

STABILIZATION TIME FRAMES

AREA	TIME FRAME	REMARKS
AREAS DRAINING TO COFFEE CREEK	IMMEDIATE STABILIZATION, COMPLETELY STABILIZED IN 7 DAYS	1, 3, 4
EXPOSED SOILS AND STOCKPILES	7 DAYS	1

1. INITIATE STABILIZATION IMMEDIATELY WHEN CONSTRUCTION HAS TEMPORARILY OR PERMANENTLY CEASED ON ANY PORTION OF THE SITE. COMPLETE STABILIZATION WITHIN THE TIME FRAME LISTED. OFTEN TIMES THIS WILL REQUIRE STABILIZATION TO OCCUR MORE THAN ONCE DURING THE COURSE OF THE PROJECT. TEMPORARY SOIL STOCKPILES WITHOUT SIGNIFICANT CLAY/SILT CONTENT, STOCKPILED ROAD BASE, AND CONSTRUCTED ROAD BASE ARE EXEMPT FROM THE STABILIZATION REQUIREMENT.

2. APPLICATION OF MULCH, HYDRO-MULCH, TACKIFIER, AND POLYACRYLAMIDE ARE NOT ACCEPTABLE STABILIZATION METHODS IN THESE AREAS.

3. STABILIZATION TIME FRAME INITIATES ONCE USE FOR SEDIMENT CONTROL CEASES.

4. STABILIZE ALL AREAS OF THE SITE PRIOR TO THE ONSET OF WINTER. ANY WORK STILL BEING PERFORMED WILL BE SNOW MULCHED, SEEDED, AND BLANKETED WITHIN THE TIME FRAMES IN THE NPDES PERMIT.

5. TOPSOIL BERMS MUST BE STABILIZED IN ORDER TO BE CONSIDERED PERIMETER CONTROL BMPS. USE MULCH, TYPE 4, AS DIRECTED BY THE FIELD STAFF. THE SEED MIX USED IN THE RAPID STABILIZATION MAY BE SUBSTITUTED AS FOLLOWS:

   A. SINGLE YEAR CONSTRUCTION BETWEEN MAY 1 - AUGUST 1, SEED WITH SEED MIXTURE 21-111
   B. SINGLE YEAR CONSTRUCTION BETWEEN AUGUST 1 AND OCTOBER 31, SEED WITH SEED MIXTURE 21-112
   C. MULTI-YEAR CONSTRUCTION, SEED WITH SEED MIXTURE 22-111

6. KEEP DITCHES AND EXPOSED SOILS IN AN EVEN ROUGH GRADED CONDITION IN ORDER TO APPLY EROSION CONTROL MULCHES, HYDRO-MULCHES AND BLANKETS.

7. SEE WATER RESOURCES NOTES FOR A LIST OF PUBLIC WATER EXCLUSION DATES. 24 HOUR STABILIZATION REQUIREMENT ONLY APPLIES DURING THE EXCLUSION DATES.

GENERAL SWPPP NOTES FOR CONSTRUCTION ACTIVITY

1. AMEND THE SWPPP AND DOCUMENT ALL CHANGES TO IT AND ALL ASSOCIATED PLAN SHEETS IN A TIMELY MANNER. STORE THE SWPPP AND ALL AMENDMENTS ON SITE AT ALL TIMES.

2. **SPECIAL ATTENTION IS BROUGHT TO MNDOT SPECIFICATION 2573.3A1: EROSION CONTROL SUPERVISOR DUTY #8: PROVIDES FOR EROSION AND SEDIMENT CONTROL METHODS FOR TEMPORARY WORK NOT SHOWN ON THE PLANS.**

3. ALL TOPSOIL TO BE STRIPPED AND SALVAGED DURING GRADING ACTIVITIES SHALL BE STOCKPILED IN LOCATIONS APPROVED BY THE ENGINEER. APPROPRIATE BMPS SHALL BE INSTALLED TO PREVENT EROSION AND SEDIMENT RUNOFF AT THESE STOCKPILE LOCATIONS. ANY STOCKPILES REMAINING IN PLACE FOR LONGER THAN 7 DAYS SHALL BE TEMPORARILY STABILIZED.

4. PREPARE AND SUBMIT A SITE MANAGEMENT PLAN FOR THE FIELD STAFF'S ACCEPTANCE FOR AREAS IDENTIFIED IN THE PLANS AS "SITE MANAGEMENT AREAS," WORK THAT WILL REQUIRE DE-WATERING, AND AS REQUESTED BY THE ENGINEER. SUBMIT ALL SITE MANAGEMENT PLANS TO THE ENGINEER IN WRITING. ALLOW A MINIMUM OF 7 DAYS FOR ENGINEER TO REVIEW AND ACCEPT SITE MANAGEMENT PLAN SUBMITTALS. WORK WILL NOT BE ALLOWED TO COMMENCE IF A SITE MANAGEMENT PLAN IS REQUIRED. THERE WILL BE NO EXTRA TIME ADDED TO THE CONTRACT DUE TO AN UNTIMELY SUBMITTAL.

5. BURNING OF ANY MATERIAL IS NOT ALLOWED WITHIN PROJECT LIMITS.

6. DO NOT DISTURB AREAS OUTSIDE OF THE CONSTRUCTION LIMITS. DELINEATE AREAS NOT TO BE DISTURBED PRIOR TO STARTING GROUND DISTURBING ACTIVITIES. IF IT BECOMES NECESSARY TO DISTURB AREAS OUTSIDE OF THE CONSTRUCTION LIMITS, OBTAIN WRITTEN PERMISSION FROM THE ENGINEER PRIOR TO PROCEEDING. PRESERVE ALL NATURAL BUFFERS SHOWN IN THE PLANS.

7. THE CONTRACTOR SHALL COORDINATE SITE DISTURBANCE IN SUCH A WAY AS TO MINIMIZE GROUND DISTURBANCE AND PRESERVE TOPSOIL TO THE GREATEST EXTENT POSSIBLE. COORDINATION OF THESE ACTIVITIES SHALL BE DONE IN CONJUNCTION WITH THE ENGINEER, OWNER, AND ANY OTHER PARTY LISTED ON THE NPDES PERMIT AS A CO-PERMITEE.

8. ROUTE STORM WATER AROUND UNSTABILIZED AREAS OF THE SITE WHENEVER POSSIBLE. PROVIDE EROSION CONTROL AND VELOCITY DISSIPATION DEVICES AS NEEDED TO KEEP CHANNELS FROM ERODING AS WELL AS TO PREVENT NUISANCE CONDITIONS AT THE OUTLET.

9. DIRECT DISCHARGES FROM BMPS TO VEGETATED AREAS WHENEVER POSSIBLE. PROVIDE VELOCITY DISSIPATION DEVICES AS NEEDED TO PREVENT EROSION.

10. THE EROSION PREVENTION AND SEDIMENT CONTROL BMPS SHALL BE PLACED AS NECESSARY TO MINIMIZE EROSION FROM DISTURBED SURFACES AND TO CAPTURE SEDIMENT ON SITE. ALL EROSION CONTROL MEASURES SHALL BE IN PLACE PRIOR TO STARTING AND REMOVAL WORK AND/OR GROUND DISTURBANCE.

11. ESTABLISH SEDIMENT CONTROL DEVICES ON ALL DOWN GRADIENT PERIMETERS AND UP GRADIENT OF ANY BUFFER ZONES BEFORE ANY UP GRADIENT LAND DISTURBING ACTIVITIES BEGIN. MAINTAIN SEDIMENT CONTROL DEVICES UNTIL CONSTRUCTION IS COMPLETE AND THE SITE IS STABILIZED.

12. LOCATE PERIMETER CONTROL ON THE CONTOUR TO CAPTURE OVERLAND, LOW-VELOCITY SHEET FLOWS DOWN GRADIENT OF ALL EXPOSED SOILS, AND PRIOR TO DISCHARGING TO SURFACE WATERS. PLACE J-HOOKS AT MAXIMUM OF 100 FOOT INTERVALS.

13. PROVIDE PERIMETER CONTROL AROUND ALL STOCKPILES. PLACE BMP A MINIMUM 5 FEET FROM THE TOES OF SLOPE WHERE POSSIBLE. DO NOT PLACE STOCKPILES IN NATURAL BUFFER AREAS, SURFACE WATERS, OR STORM WATER CONVEYANCES (CURB & GUTTER SYSTEM).

14. STORM SEWER AND PIPE CULVERT INLET PROTECTIONS SHALL BE USED AS SPECIFIED ON EROSION CONTROL PLANS AND AS DIRECTED BY ENGINEER IN FIELD.

15. PLACE CONSTRUCTION EXITS, AS NECESSARY, TO PREVENT TRACKING OF SEDIMENT ONTO PAVED SURFACES BOTH ON AND OFF THE PROJECT SITE. PROVIDE CONSTRUCTION EXITS OF SUFFICIENT SIZE TO PREVENT TRACK OUT. MAINTAIN CONSTRUCTION EXITS WHEN EVIDENCE OF TRACKING IS DISCOVERED. REGULAR STREET SWEEPING IS NOT AN ACCEPTABLE ALTERNATIVE TO PROPER CONSTRUCTION EXIT INSTALLATION AND MAINTENANCE.

16. DISCHARGE TURBID OR SEDIMENT LADEN WATER TO TEMPORARY SEDIMENT BASINS WHENEVER POSSIBLE. IN THE EVENT THAT THIS IS NOT POSSIBLE, THE WATER MUST BE TREATED SO THAT IT DOES NOT CAUSE A NUISANCE CONDITION IN THE RECEIVING WATERS OR TO DOWNSTREAM LANDOWNERS. CLEAN OUT ALL PERMANENT STORM WATER BASINS REGARDLESS OF WHETHER USED AS A TEMPORARY SEDIMENT BASINS OR TRAPS TO THE DESIGN CAPACITY AFTER ALL UP GRADIENT LAND DISTURBING ACTIVITY IS COMPLETED.

17. ALL BACKWASH WATER USED IN FILTRATION SYSTEMS FOR TURBID WATER MUST BE HAULED AND DISPOSED OF OFF SITE.

18. PROVIDE SCOUR PROTECTION AT ANY OUTFALL OF DE-WATERING ACTIVITIES.

19. PROVIDE STABILIZATION IN ANY TRENCHES CUT FOR DE-WATERING OR SITE DRAINING PURPOSES.

20. REMOVE SEDIMENT FROM STORM WATER SYSTEM AT THE END OF PROJECT.

21. PRESERVE A MINIMUM OF 50 FOOT NATURAL BUFFER OR (IF BUFFER IS NOT POSSIBLE) PROVIDE REDUNDANT SEDIMENT CONTROLS WHEN A SURFACE WATER IS LOCATED WITHIN 50 FEET OF LAND DISTURBANCE AND STORM WATER FLOWS TO THE SURFACE WATER.

POLLUTION PREVENTION

1. PROVIDE A SPILL KIT AT EACH WORK LOCATION ON THE SITE.

2. STORE ALL BUILDING MATERIALS THAT HAVE THE POTENTIAL TO LEACH POLLUTANTS, PESTICIDES, HERBICIDES, INSECTICIDES, FERTILIZERS, TREATMENT CHEMICALS, AND LANDSCAPE MATERIALS UNDER COVER AND WITH SECONDARY CONTAINMENT.

3. PROVIDE A SECURE STORAGE AREA WITH RESTRICTED ACCESS FOR ALL HAZARDOUS MATERIALS AND TOXIC WASTE. RETURN ALL HAZARDOUS MATERIALS AND TOXIC WASTE TO THE DESIGNATED STORAGE AREA AT THE END OF THE BUSINESS DAY. STORE ALL HAZARDOUS MATERIALS AND TOXIC WASTE (INCLUDING, BUT NOT LIMITED TO, OIL, DIESEL FUEL, GASOLINE, HYDRAULIC FLUIDS, PAINT, PETROLEUM BASED PRODUCTS, WOOD PRESERVATIVES, ADDITIVES, CURING COMPOUNDS, AND ACIDS) IN SEALED CONTAINERS WITH SECONDARY CONTAINMENT. CLEAN UP SPILLS IMMEDIATELY.

4. STORE, COLLECT AND DISPOSE OF ALL SOLID WASTE.

5. POSITION ALL PORTABLE TOILETS SO THAT THEY ARE SECURE AND CANNOT BE TIPPED OR KNOCKED OVER. PROPERLY DISPOSE OF ALL SANITARY WASTE.

6. FUEL AND MAINTAIN VEHICLES IN A DESIGNATED CONTAINED AREA WHENEVER POSSIBLE. USE DRIP PANS OR ABSORBENT MATERIALS TO PREVENT SPILLS OR LEAKED CHEMICALS FROM DISCHARGING TO SURFACE WATER OR STORM WATER CONVEYANCES. PROVIDE A SPILL KIT AT EACH LOCATION THAT VEHICLES AND EQUIPMENT ARE FUELED OR MAINTAINED AT.

7. LIMIT VEHICLE AND EQUIPMENT WASHING TO A DEFINED AREA OF THE SITE. CONTAIN RUNOFF FROM THE WASHING AREA TO A TEMPORARY SEDIMENT BASIN OR OTHER EFFECTIVE CONTROL. PROPERLY DISPOSE OF ALL WASTE GENERATED BY VEHICLE AND EQUIPMENT WASHING. ENGINE DEGREASING IS NOT ALLOWED ON THE SITE.

8. PROVIDE EFFECTIVE CONTAINMENT FOR ALL LIQUID AND SOLID WASTES GENERATED BY WASHOUT OF CONCRETE, STUCCO, PAINT, FORM RELEASE OILS, CURING COMPOUNDS, AND OTHER CONSTRUCTION MATERIALS. LIQUID AND SOLID WASHOUT WASTES MUST NOT CONTACT THE GROUND. DESIGN THE CONTAINMENT SO THAT IT DOES NOT RESULT IN RUNOFF FROM THE WASHOUT OPERATIONS OR CONTAINMENT AREA.

9. CREATE AND FOLLOW A WRITTEN DISPOSAL PLAN FOR ALL WASTE MATERIALS. INCLUDE IN THE PLAN HOW THE MATERIAL WILL BE DISPOSED OF AND THE LOCATION OF THE DISPOSAL SITE. SUBMIT PLAN TO THE ENGINEER FOR REVIEW.

10. USE METHODS AND OPERATIONAL PROCEDURES THAT PREVENT DISCHARGE OR PLACEMENT OF BITUMINOUS MILLINGS, CUTTINGS, AND OTHER BITUMINOUS WASTES FROM AREAS OF EXISTING OR FUTURE VEGETATED SOILS AND FROM ALL WATER CONVEYANCE SYSTEMS, INCLUDING INLETS, DITCHES AND CURB FLOW LINES.

11. USE METHODS AND OPERATIONAL PROCEDURES THAT PREVENT CONCRETE DUST, PARTICLES, CONCRETE WASH OUT, AND OTHER CONCRETE WASTES FROM LEAVING PROJECT LIMITS, DEPOSITING IN EXISTING OR FUTURE VEGETATED AREAS, AND FROM ENTERING STORM WATER CONVEYANCE SYSTEMS, INCLUDING INLETS, DITCHES, AND CURB FLOW LINES. USE METHODS AND OPERATIONAL PROCEDURES THAT PREVENT SAW CUT SLURRY AND PLANING WASTE FROM LEAVING THE PROJECT LIMITS AND FROM ENTERING STORM WATER CONVEYANCE SYSTEMS INCLUDING DITCHES AND CULVERTS.

© MSA Professional Services, Inc.

SPECIAL OR IMPAIRED WATERS

COFFEE CREEK

CATCHBASINS ON THE SOUTH WEST PART OF THE SITE AT OR NEAR 22ND & 23RD AVENUE (APPROXIMATELY 7 CATCHBASINS) DRAIN TO COFFE CREEK. COFFEE CREEK IN THE PROJECT AREA IS THE BOX CULVERT LOCATED BENEATH U.S. HIGHWAY 53. COFFEE CREEK IS CLASSIFIED AS A SPECIAL WATER (TROUT STREAM). THE FOLLOWING REQUIREMENTS APPLY TO ALL AREAS OF THE PROJECT WHICH DISCHARGE TO COFFEE CREEK.

PERMITTEES (CONTRACTOR) MUST IMMEDIATELY INITIATE STABILIZATION OF EXPOSED SOIL AREAS, AS DESCRIBED IN ITEM 8.4 (STATE OF MINNESOTA NPDES/ SDS PERMIT), AND COMPLETE THE STABILIZATION WITHIN SEVEN (7) CALENDAR DAYS AFTER THE CONSTRUCTION ACTIVITY IN THAT PORTION OF THE SITE TEMPORARILY OR PERMANENTLY CEASES.

PERMITTEES (CONTRACTOR) MUST INCLUDE AN UNDISTURBED BUFFER ZONE OF NOT LESS THAN 100 LINEAR FEET FROM A SPECIAL WATER (NOT INCLUDING TRIBUTARIES) AND MUST MAINTAIN THIS BUFFER ZONE AT ALL TIMES, BOTH DURING CONSTRUCTION AND AS A PERMANENT FEATURE POST CONSTRUCTION, EXCEPT WHERE A WATER CROSSING OR OTHER ENCROACHMENT IS NECESSARY TO COMPLETE THE PROJECT. PERMITTEES MUST FULLY DOCUMENT THE CIRCUMSTANCE AND REASONS THE BUFFER ENCROACHMENT IS NECESSARY IN THE SWPPP AND INCLUDE RESTORATION ACTIVITIES. THIS PERMIT ALLOWS REPLACEMENT OF EXISTING IMPERVIOUS SURFACE WITHIN THE BUFFER. PERMITTEES MUST MINIMIZE ALL POTENTIAL WATER QUALITY, SCENIC AND OTHER ENVIRONMENTAL IMPACTS OF THESE EXCEPTIONS BY THE USE OF ADDITIONAL OR REDUNDANT BMPS AND MUST DOCUMENT THIS IN THE SWPPP FOR THE PROJECT.

ENCROACHEMNT INTO THE REQUIRED BUFFER ZONE IS UNAVOIDABLE DUE TO THE HIGHLY DEVELOPED URBAN NATURE OF THE PROJECT AREA AND THE FACT THAT COFFEE CREEK RUNS DIRECTLY THROUGH THE PROJECT AREA. BECAUSE MAINTAING THE REQUIRED BUFFER ZONE WILL BE IMPOSSIBLE REDUNDANT PROTECTION WILL BE APPLIED AT ALL INLETS DRAINING TO COFFEE CREEK.

REDUNDANT, OR DOUBLE, INLET PROTECTION IS REQUIRED FOR ALL INLETS DRAINING TO COFFEE CREEK. THIS INCLUDES ALL OF THE INLETS AT 22ND AVENUE W & 23RD AVENUE W. APPROXIMATELY 7 INLETS TOTAL.

PERMIT TERMINATION CONDITIONS

THE FOLLOWING CONDITIONS MUST BE MET BEFORE THE TERMINATION OF THE PERMIT CAN BE COMPLETED.

1. PERMANENT UNIFORM PERENNIAL VEGETATIVE COVER MUST BE ESETABLISHED AT 70% DENSITY OF ITS EXPECTED FINAL GROWTH.
2. THE PERMANENT STORM WATER TREATMENT SYSTEM IS CONSTRUCTED, MEETS ALL REQUIREMENTS, AND IS OPERATING AS DESIGNED.
3. ALL TEMPORARY SYNTHETIC EROSION PREVENTION AND SEDIMENT CONTROL BMPS MUST BE REMOVED.
4. CLEAN OUT SEDIMENT FROM CONVEYANCE SYSTEMS AND PERMANENT STORM WATER TREATMENT SYSTEMS (RETURN TO DESIGN CAPACITY)
5. FOR RESIDENTIAL SITES, INSTALL TEMPORARY EROSION PROTECTION AND DOWN-GRADIENT PERIMETER CONTROL AND DISTRIBUTE THE MPCA'S HOMEOWNER FACT SHEET.
6. SUBMIT A NOTICE OF TERMINATION (NOT) TO THE MPCA.

SUMMARY OF EROSION CONTROL ITEMS

LOCATION	DESCRIPTION	QUANTITY
PROJECT SITE	SILT FENCE	570 LF
INLETS AT OR NEAR 22ND & 23RD AVENUES	SAND BAG INLET PROTECTION	7
ALL INLETS	ERTEC OR DANDY BAG INLET PROTECTION	13
ALL CONSTRUCTION ENTRANCES	VEHICLE TRACKING PAD	

TRAINING

TRAINING IS REQUIRED FOR ALL PERMITTED PROJECTS AFTER FEBRUARY 1, 2010. IT MUST BE PROVIDED BY ENTITIES W/ EXPERTISE IN EROSION PREVENTION, SEDIMENT CONTROL OR PERMANENT STORMWATER MANAGEMENT. TRAINING MUST BE FOCUSED ON THE INDIVIDUAL'S JOB DUTIES AS THEY RELATE TO PERMIT REQUIREMENTS (PART III.A.2).

INDIVIDUALS WHO MUST BE TRAINED INCLUDE:
A. INDIVIDUALS PREPARING THE SWPPP FOR THE PROJECT.

SWPPP DESIGNER:

NAME: ANDREW K BARNEBEY
TITLE: PROJECT ENGINEER
COMPANY: MSA PROFESSIONAL SERVICES, INC.
DATE OF TRAINING: APRIL, 2019
TRAINING CERTIFICATION: DESIGN OF CONSTRUCTION SWPPP
EXPIRATION: MAY 31, 2022
TRAINING ENTITY: U. OF MINNESOTA, DEPT. OF BIOPRODUCTS AND BIOSYSTEMS ENGINEERING
INSTRUCTORS:JOHN CHAPMAN, TODD SMITH
PROFESSIONAL TRAINING HOURS: 12

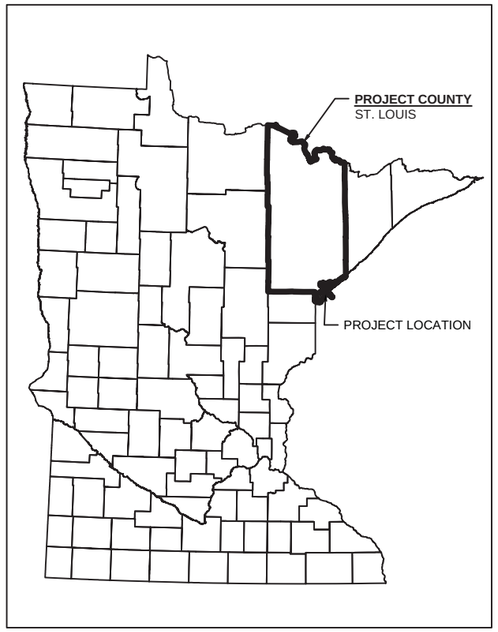

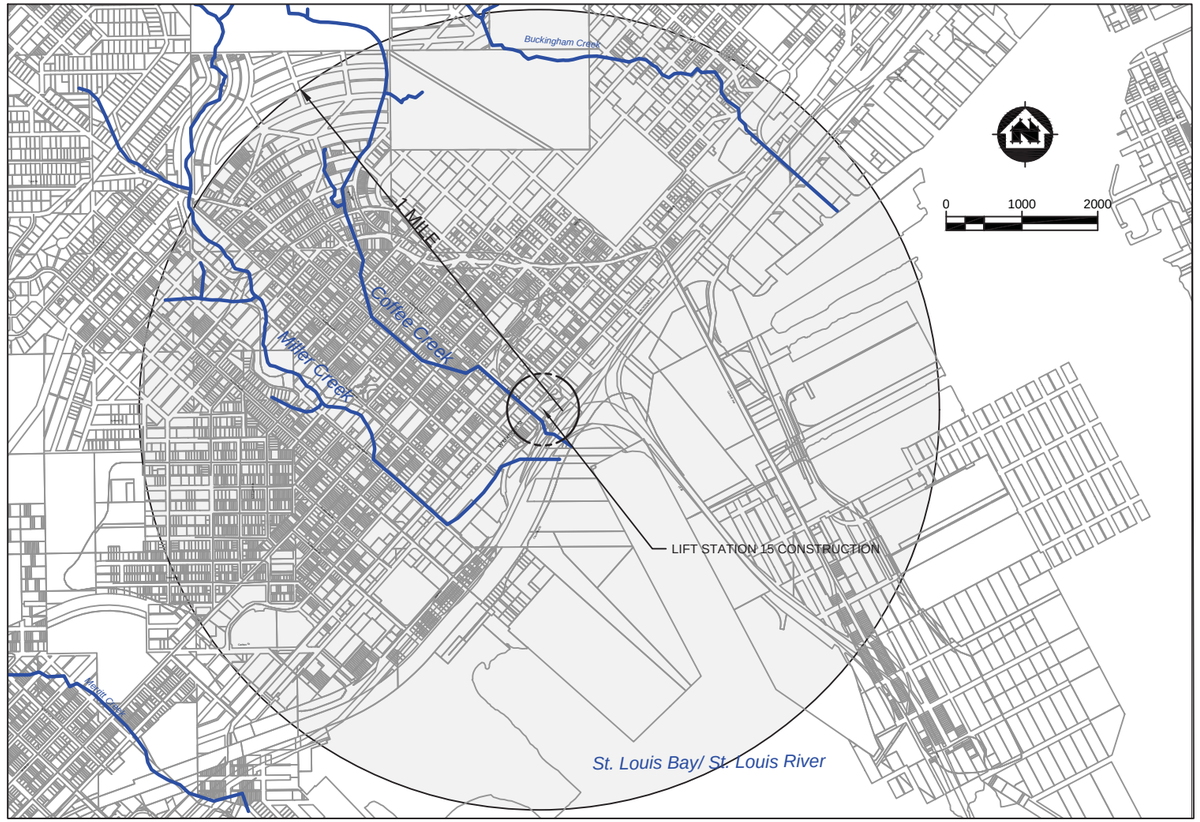

		NO.	DATE		BY
PROJECT DATE: 1-10-2020	DRAWN BY: -	.	.		.
	DESIGNED BY: INIT	.	.		.
	CHECKED BY: SCR	.	.		.

PLOT DATE: Tuesday, January 14, 2020 1:41:55 PM, P:\610s\616\00616135\CADD\C3D\00616135 SWPPP.dwg

I HEREBY CERTIFY THAT THIS PLAN, REPORT, OR SPECIFICATION WAS PREPARED BY ME OR UNDER MY DIRECT SUPERVISION AND THAT I AM A DULY LICENSED PROFESSIONAL ENGINEER UNDER THE LAWS OF THE STATE OF MINNESOTA.

1/10/2020 Date — 56425 License No.

ANDREW K BARNEBEY

MSA
ENGINEERING | ARCHITECTURE | SURVEYING
FUNDING | PLANNING | ENVIRONMENTAL
332 W Superior Street, Duluth MN 55802
(218) 722-3915 www.msa-ps.com
© MSA Professional Services, Inc.

LIFT STATION 15 RELOCATION
CITY OF DULUTH, MINNESOTA
2114 W MICHIGAN STREET

SWPPP NARRATIVE 3

PROJECT NO. 00616135
SHEET C-7

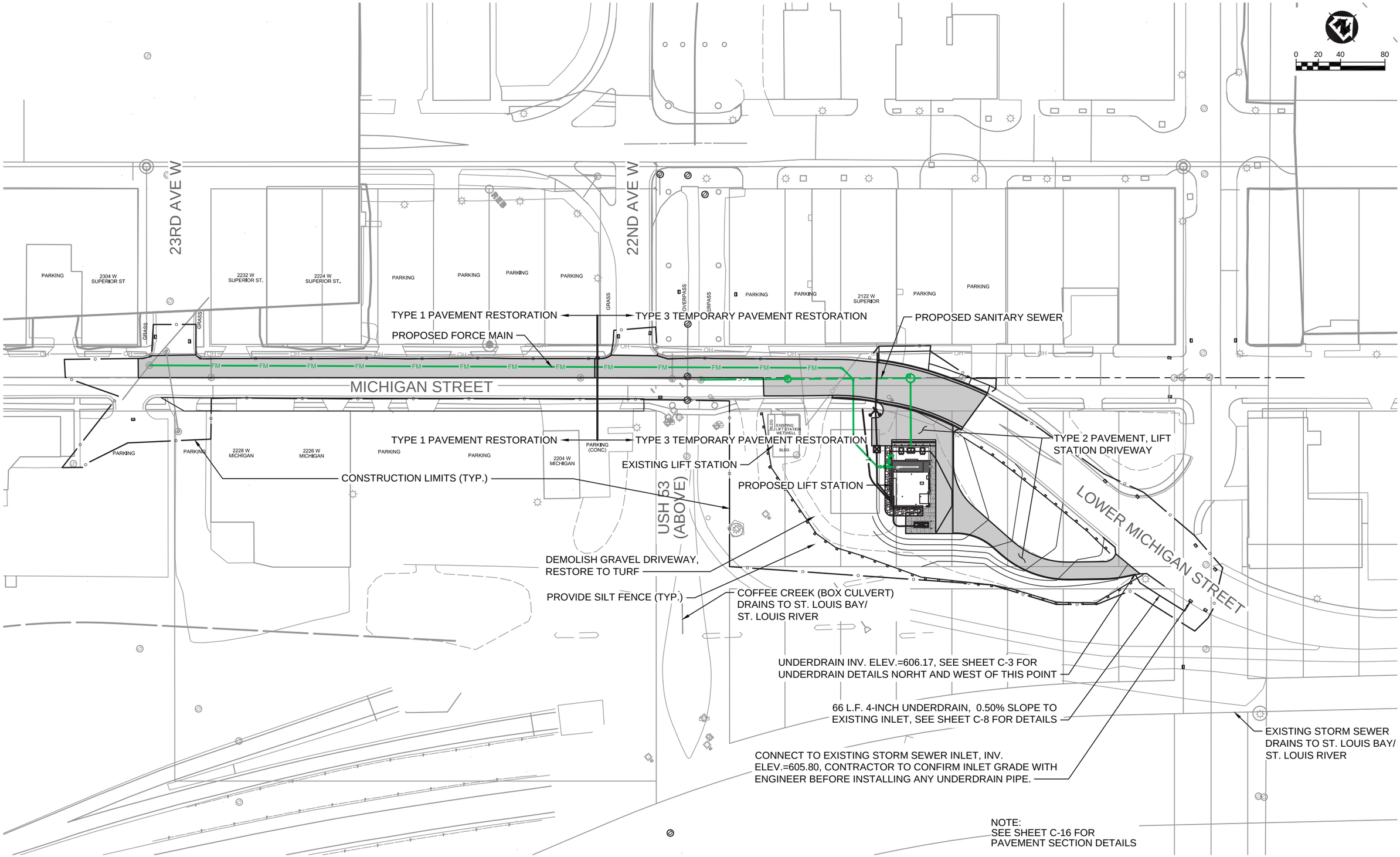

PROJECT NO.: 00616135	SCALE: AS SHOWN	NO.	DATE	REVISION	BY
PROJECT DATE: 1-10-2020	DRAWN BY: -	.	.	.	.
F.B. : .	CHECKED BY: SCR	.	.	.	.
.	.	.	.	.	.

PLOT DATE: 1/14/20. P:\610s\616\00616135\CADD\Construction Drawings\2-Site Civil\00616135 Pavement Restoration Plan.dwg

I HEREBY CERTIFY THAT THIS PLAN, REPORT, OR SPECIFICATION WAS PREPARED BY ME OR UNDER MY DIRECT SUPERVISION AND THAT I AM A DULY LICENSED PROFESSIONAL ENGINEER UNDER THE LAWS OF THE STATE OF MINNESOTA.

1/10/2020 Date — 44287 License No.

SCOTT R CHILSON

MSA

ENGINEERING | ARCHITECTURE | SURVEYING
FUNDING | PLANNING | ENVIRONMENTAL
332 W Superior Street, Duluth MN 55802
(218) 722-3915 www.msa-ps.com

© MSA Professional Services, Inc.

LIFT STATION 15 RELOCATION
CITY OF DULUTH, MINNESOTA
2114 W MICHIGAN STREET

PAVEMENT RESTORATION PLAN

FILE NO. 00616135

SHEET C-8

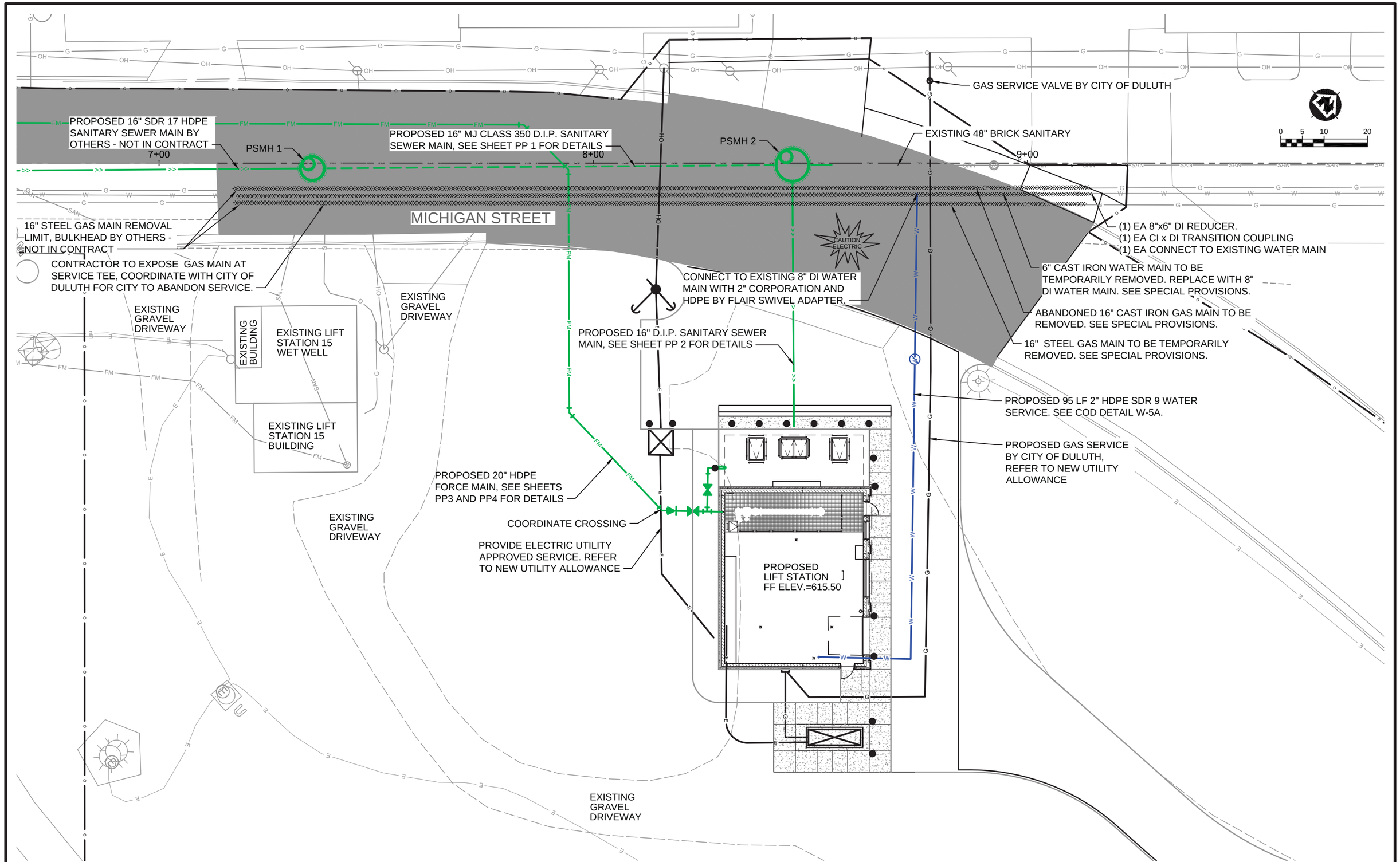

PROJECT NO.: 00616135	SCALE: AS SHOWN	NO.	DATE	REVISION	BY
PROJECT DATE: 1-10-2020	DRAWN BY: -	.	.	.	.
F.B.: .	CHECKED BY: SCR	.	.	.	.
.		.	.	.	.

PLOT DATE: 1/15/20, P:\610s\616\00616135\CADD\Construction Drawings\2-Site Civil\00616135 Site Plan.dwg

I HEREBY CERTIFY THAT THIS PLAN, REPORT, OR SPECIFICATION WAS PREPARED BY ME OR UNDER MY DIRECT SUPERVISION AND THAT I AM A DULY LICENSED PROFESSIONAL ENGINEER UNDER THE LAWS OF THE STATE OF MINNESOTA.

1/10/2020 Date — 44287 License No.

SCOTT R CHILSON

MSA

ENGINEERING | ARCHITECTURE | SURVEYING
FUNDING | PLANNING | ENVIRONMENTAL
332 W Superior Street, Duluth MN 55802
(218) 722-3915 www.msa-ps.com

© MSA Professional Services, Inc.

LIFT STATION 15 RELOCATION
CITY OF DULUTH, MINNESOTA
2114 W MICHIGAN STREET

YARD PIPING PLAN

FILE NO. 00616135

SHEET C-9

THE EXACT SPACING AND LOCATIONS OF THE TIMBER PILES ALONG THE EXISTING PIPE CENTERLINE IS UNKNOWN. THIS DETAIL REPRESENTS A CONCEPTUAL DESIGN AND WILL BE FIELD ADJUSTED AT THE ENGINEERS DIRECTION.

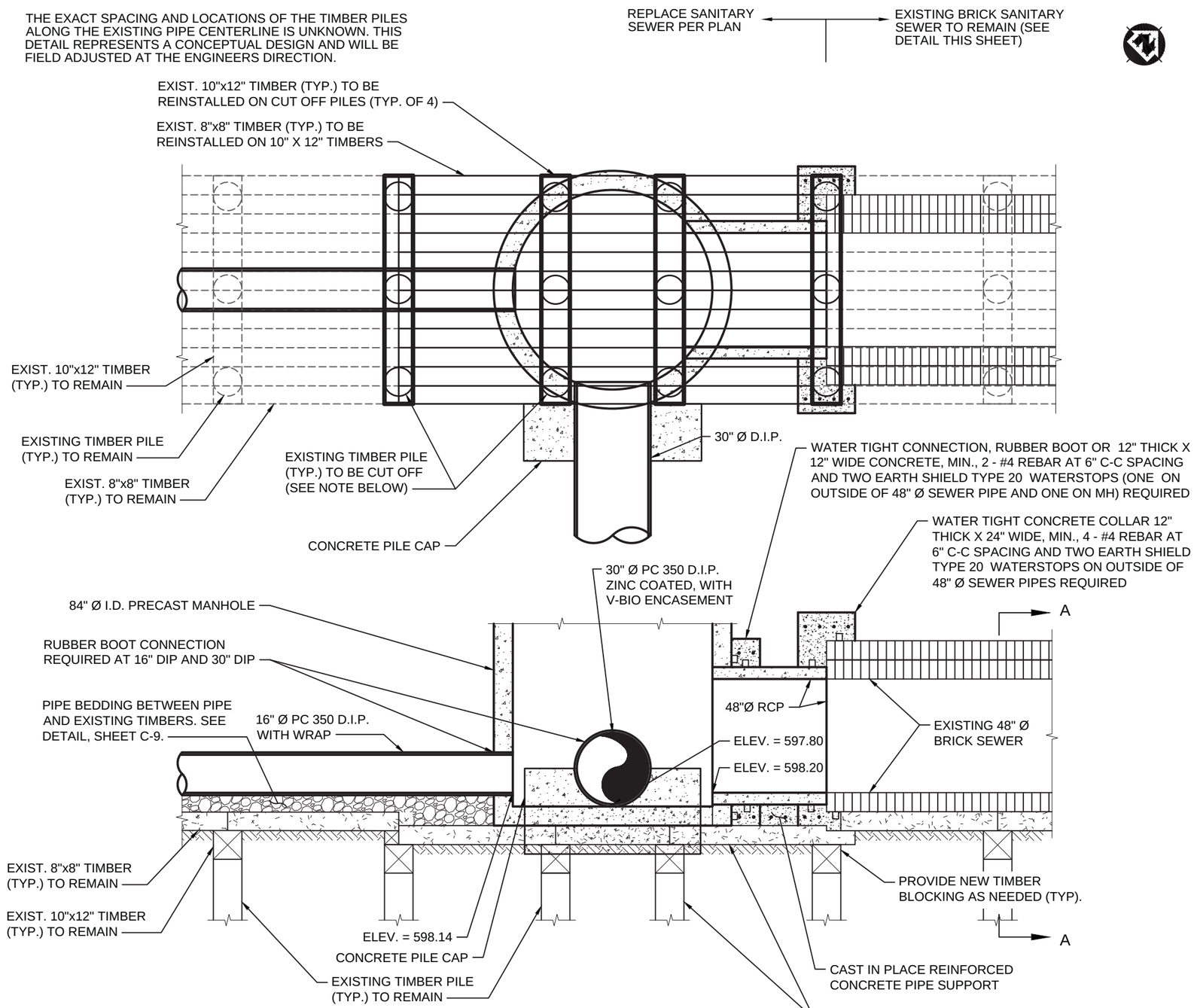

PSMH-2 CONSTRUCTION DETAIL
NO SCALE

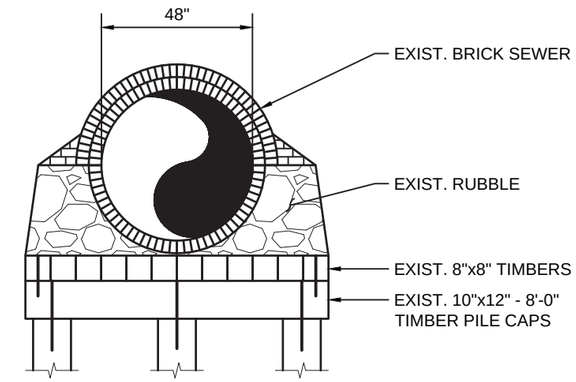

SECTION A-A
EXISTING BRICK SEWER SECTION
NO SCALE

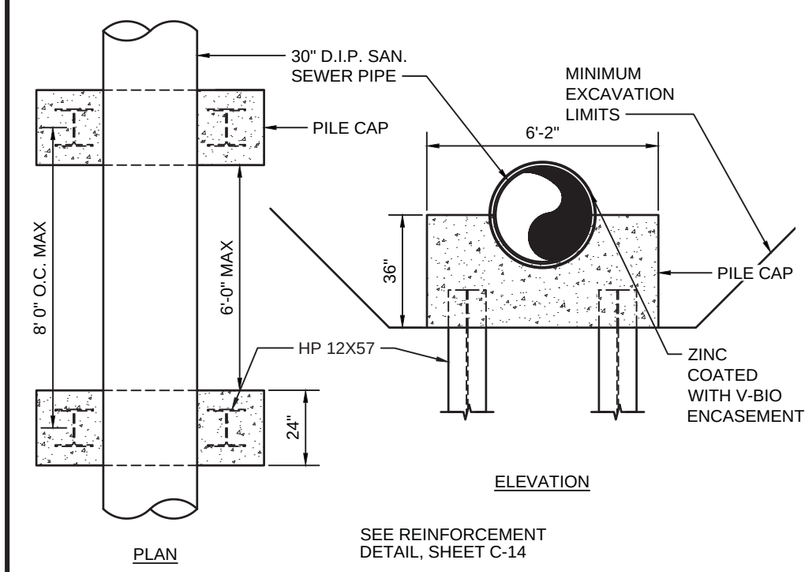

SEE REINFORCEMENT DETAIL, SHEET C-14

PILE CAP DETAIL
NO SCALE

		NO.	DATE	REVISION	BY
PROJECT DATE: 1-10-2020	DRAWN BY: -	.	.	.	.
	DESIGNED BY: INIT	.	.	.	.
	CHECKED BY: SCR	.	.	.	.

PLOT DATE: Tuesday, January 14, 2020 1:45:20 PM, P:\610s\616\00616135\CADD\Construction Drawings\2-Site Civil\00616135 Civil Details.dwg

I HEREBY CERTIFY THAT THIS PLAN, REPORT, OR SPECIFICATION WAS PREPARED BY ME OR UNDER MY DIRECT SUPERVISION AND THAT I AM A DULY LICENSED PROFESSIONAL ENGINEER UNDER THE LAWS OF THE STATE OF MINNESOTA.

1/10/2020 Date — 44287 License No.

SCOTT R CHILSON

MSA

ENGINEERING | ARCHITECTURE | SURVEYING
FUNDING | PLANNING | ENVIRONMENTAL
332 W Superior Street, Duluth MN 55802
(218) 722-3915 www.msa-ps.com

© MSA Professional Services, Inc.

LIFT STATION 15 RELOCATION
CITY OF DULUTH, MINNESOTA
2114 W MICHIGAN STREET

SITE CIVIL DETAILS

PROJECT NO. 00616135

SHEET C-10

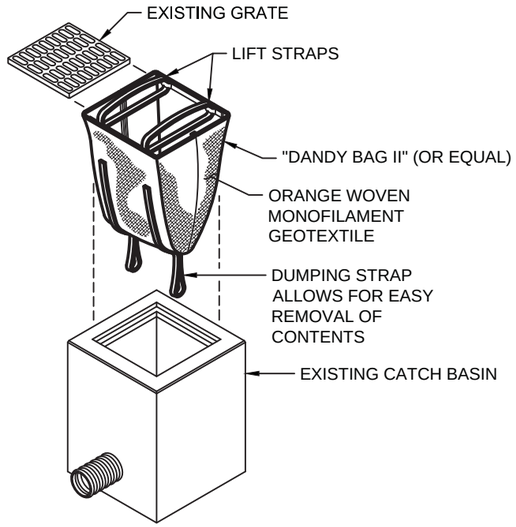

MAINTENANCE REQUIREMENT:
FOLLOWING EACH RUNOFF EVENT, MONITOR AND, IF NECESSARY, REMOVE ALL ACCUMULATED SEDIMENT & DEBRIS FROM THE UNIT AFTER THE HEIGHT OF THE ACCUMULATED MATERIAL REACHES 1/3 OF THE HEIGHT OF THE SEDIMENT BAG.

TYPE A INLET PROTECTION
CATCH BASIN SEDIMENT BAG INSERT TYPE DETAIL
NO SCALE

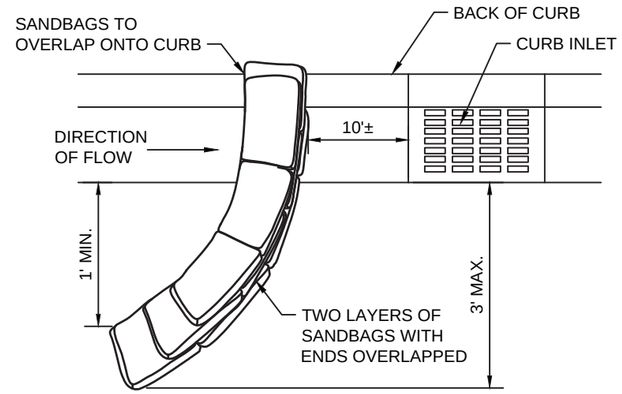

GENERAL NOTES:

1. DETAIL OF CONSTRUCTION SHOWN ON THIS DRAWING SHALL CONFORM TO THE PERTINENT REQUIREMENTS OF THE STANDARD SPECIFICATIONS AND APPLICABLE SPECIAL PROVISIONS.

CURB INLET SEDIMENT BARRIER (SANDBAG TYPE) DETAIL
NO SCALE

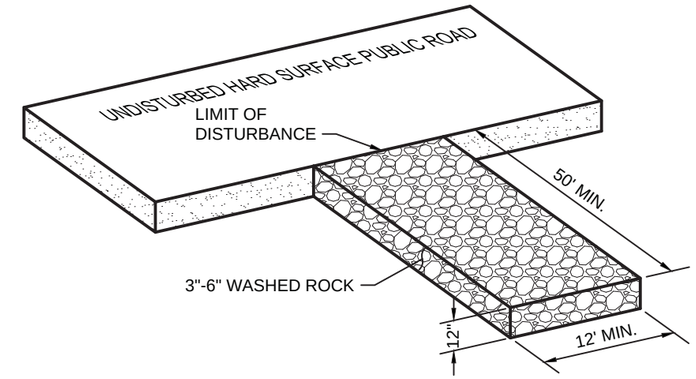

VEHICLE TRACKING PAD
NO SCALE

CITY OF DULUTH CONSTRUCTION DETAILS

THE FOLLOWING CITY OF DULUTH CONSTRUCTION DETAILS ARE INCLUDED IN THESE CONSTRUCTION DOCUMENTS BY REFERENCE.
CURRENT DETAILS ARE AVAILABLE AT;
HTTP://WWW.DULUTHMN.GOV/ENGINEERING/STANDARD-CONSTRUCTION-SPECIFICATIONS/

TITLE	DATE	NAME
EX-1	4-05-2019	DUCTILE IRON, PE WATERMAIN, PRESSURE SEWER, & FORCEMAIN BEDDING
EX-3	4-05-2019	PVC AND CORRUGATED POLYETHYLENE SEWER PIPE BEDDING
SAN-1	2-01-2013	SANITARY CASTING DETAIL
SAN-3A	4-05-2019	CONCRETE ENCASED CASTING COLLAR FOR SANITARY MH IN ROADWAY, WALKS, & DRIVES
SAN-6	1-08-2016	HDPE FORCEMAIN TO GRAVITY MAIN MANHOLE
SAN-9		POLYETHYLENE MH ADJUSTING RING – FLAT
SAN-10		POLYETHYLENE MH ADJUSTING RING - WEDGE
SAN-11	1-08-2016	PRECAST MECHANICAL JOINT SEWER MANHOLE
STR-4	2-01-2013	BITUMINOUS CURB
STR-5	4-05-2019	DRIVEWAY & ALLEY ENTRANCES
STR-8	4-05-2019	STREET RESTORATION OVER TRENCH
W-5	4-05-2019	TYPICAL HDPE WATER SERVICE – 3/4", 1", 1-1/4", AND 2"
W-11	2-01-2013	EXCAVATION FOR TAPPING SLEEVE AND VALVE
W-13	4-05-2019	WATER SERVICE INSULATION

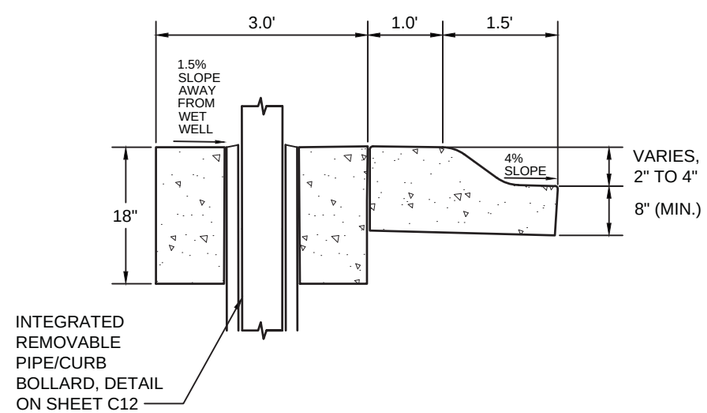

MOUNTABLE REJECT CONCRETE CURB DETAIL
NO SCALE

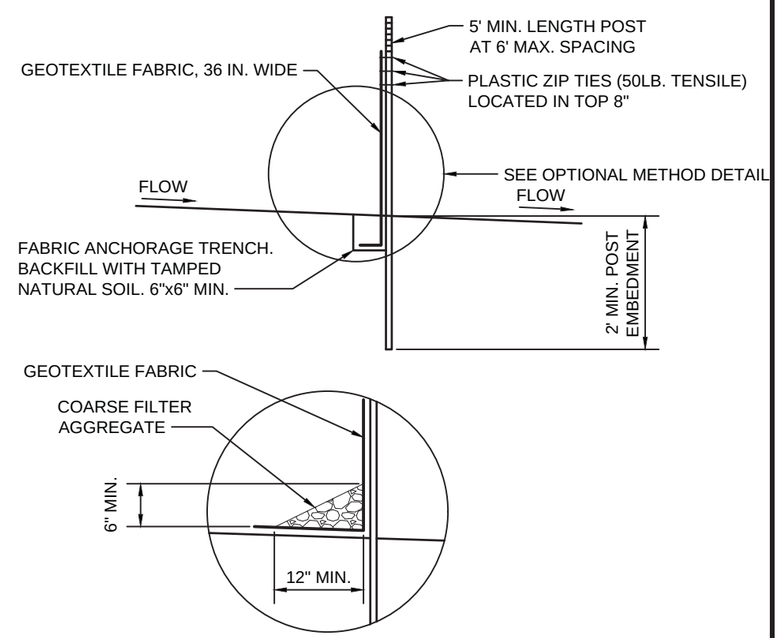

SILT FENCE TYPE HI
(HAND INSTALLED)
NO SCALE

		NO.	DATE	REVISION	BY
PROJECT DATE: 1-10-2020	DRAWN BY: -	-	-	-	-
	DESIGNED BY: INIT	-	-	-	-
	CHECKED BY: SCR	-	-	-	-

PLOT DATE: Tuesday, January 14, 2020 1:45:21 PM, P:\610s\616\00616135\CADD\Construction Drawings\2-Site Civil\00616135 Civil Details.dwg

I HEREBY CERTIFY THAT THIS PLAN, REPORT, OR SPECIFICATION WAS PREPARED BY ME OR UNDER MY DIRECT SUPERVISION AND THAT I AM A DULY LICENSED PROFESSIONAL ENGINEER UNDER THE LAWS OF THE STATE OF MINNESOTA.

1/10/2020 Date — 44287 License No.
SCOTT R CHILSON

MSA
ENGINEERING | ARCHITECTURE | SURVEYING
FUNDING | PLANNING | ENVIRONMENTAL
332 W Superior Street, Duluth MN 55802
(218) 722-3915 www.msa-ps.com
© MSA Professional Services, Inc.

LIFT STATION 15 RELOCATION
CITY OF DULUTH, MINNESOTA
2114 W MICHIGAN STREET

SITE CIVIL DETAILS

PROJECT NO. 00616135
SHEET C-11

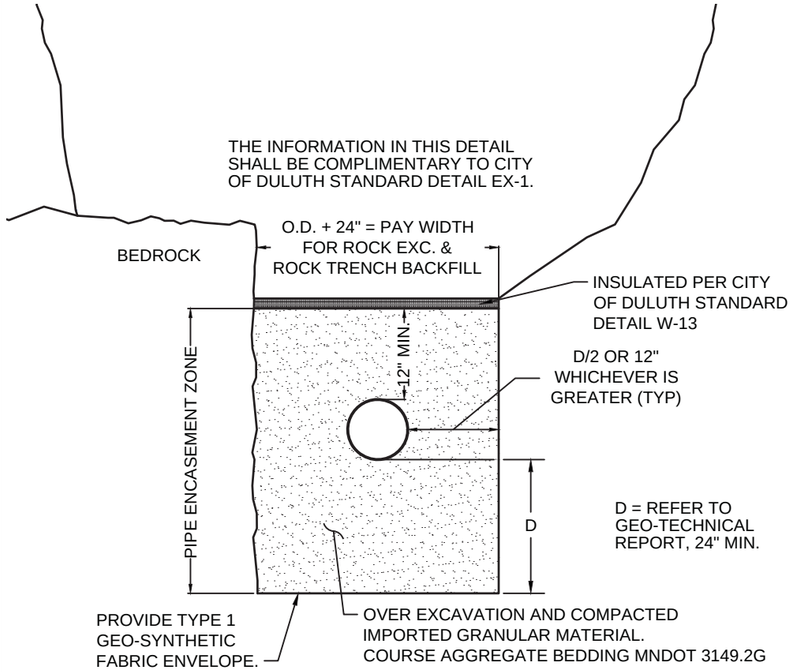

FORCEMAIN BEDDING & INSULATION DETAIL
NO SCALE

1. THE INFORMATION IN THIS DETAIL SHALL BE COMPLIMENTARY TO CITY OF DULUTH STANDARD DETAIL EX-1.
2. COARSE FILTER AGGRGATE THICKNESS VARIES AND SHALL FILL THE ENTIRE SPACE BETWEEN PIPE SPRINGLINE AND EXISTING TIMBERS.

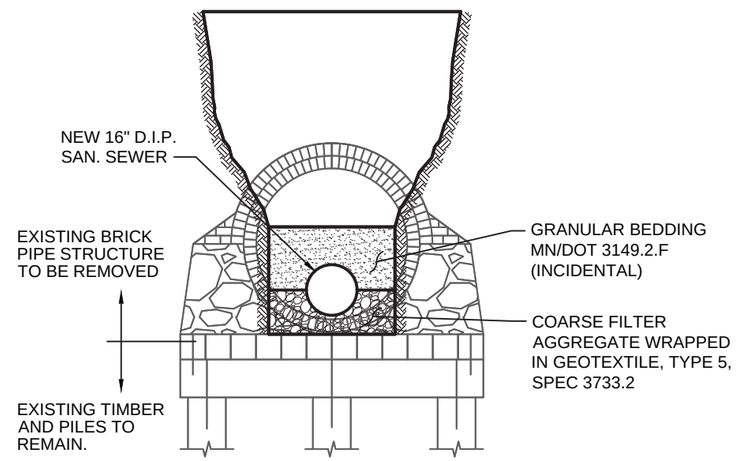

16" DIP SAN. SEWER BEDDING DETAIL
NO SCALE

NOT USED

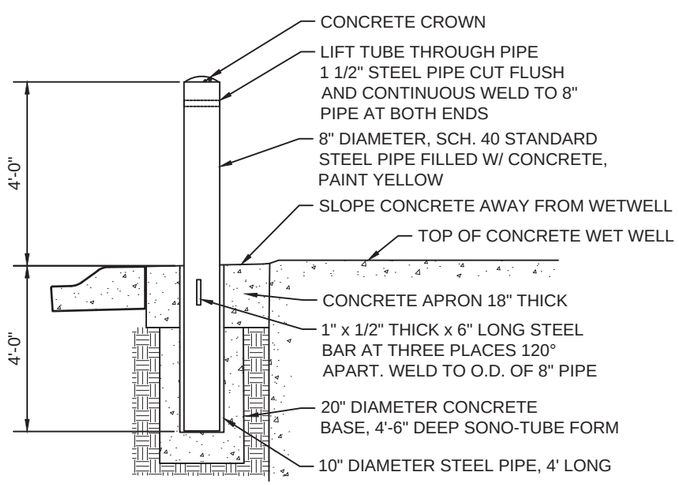

INTEGRATED REMOVABLE PIPE/CURB BOLLARD
NO SCALE

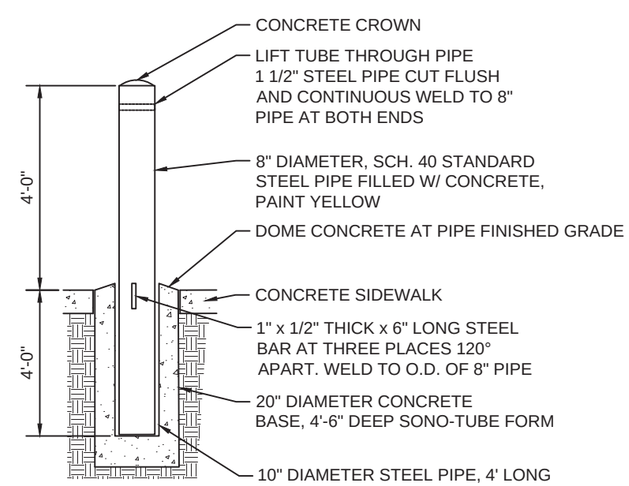

REMOVABLE PIPE BOLLARD
NO SCALE

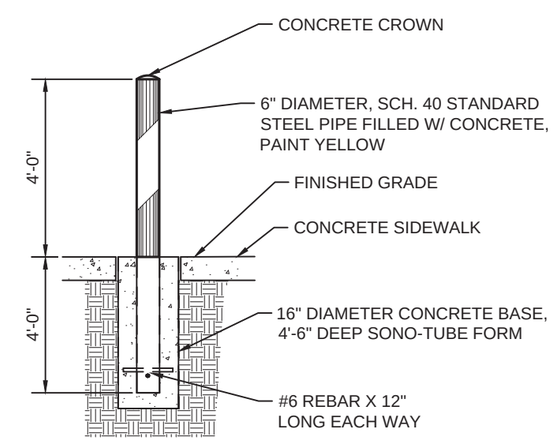

GUARD POST
NO SCALE

		NO.	DATE	REVISION	BY
PROJECT DATE: 1-10-2020	DRAWN BY: -	-	-	-	-
	DESIGNED BY: Init	-	-	-	-
	CHECKED BY: SCR	-	-	-	-

PLOT DATE: 1/14/2020 1:45 PM, P:\610s\616\00616135\CADD\Construction Drawings\2-Site Civil\00616135 Civil Details.dwg

I HEREBY CERTIFY THAT THIS PLAN, REPORT, OR SPECIFICATION WAS PREPARED BY ME OR UNDER MY DIRECT SUPERVISION AND THAT I AM A DULY LICENSED PROFESSIONAL ENGINEER UNDER THE LAWS OF THE STATE OF MINNESOTA.

1/10/2020 Date — 44287 License No.

SCOTT R CHILSON

MSA

ENGINEERING | ARCHITECTURE | SURVEYING
FUNDING | PLANNING | ENVIRONMENTAL
332 W Superior Street, Duluth MN 55802
(218) 722-3915 www.msa-ps.com

© MSA Professional Services, Inc.

LIFT STATION 15 RELOCATION
CITY OF DULUTH, MINNESOTA
2114 W MICHIGAN STREET

SITE CIVIL DETAILS

PROJECT NO. 00616135

SHEET C-12

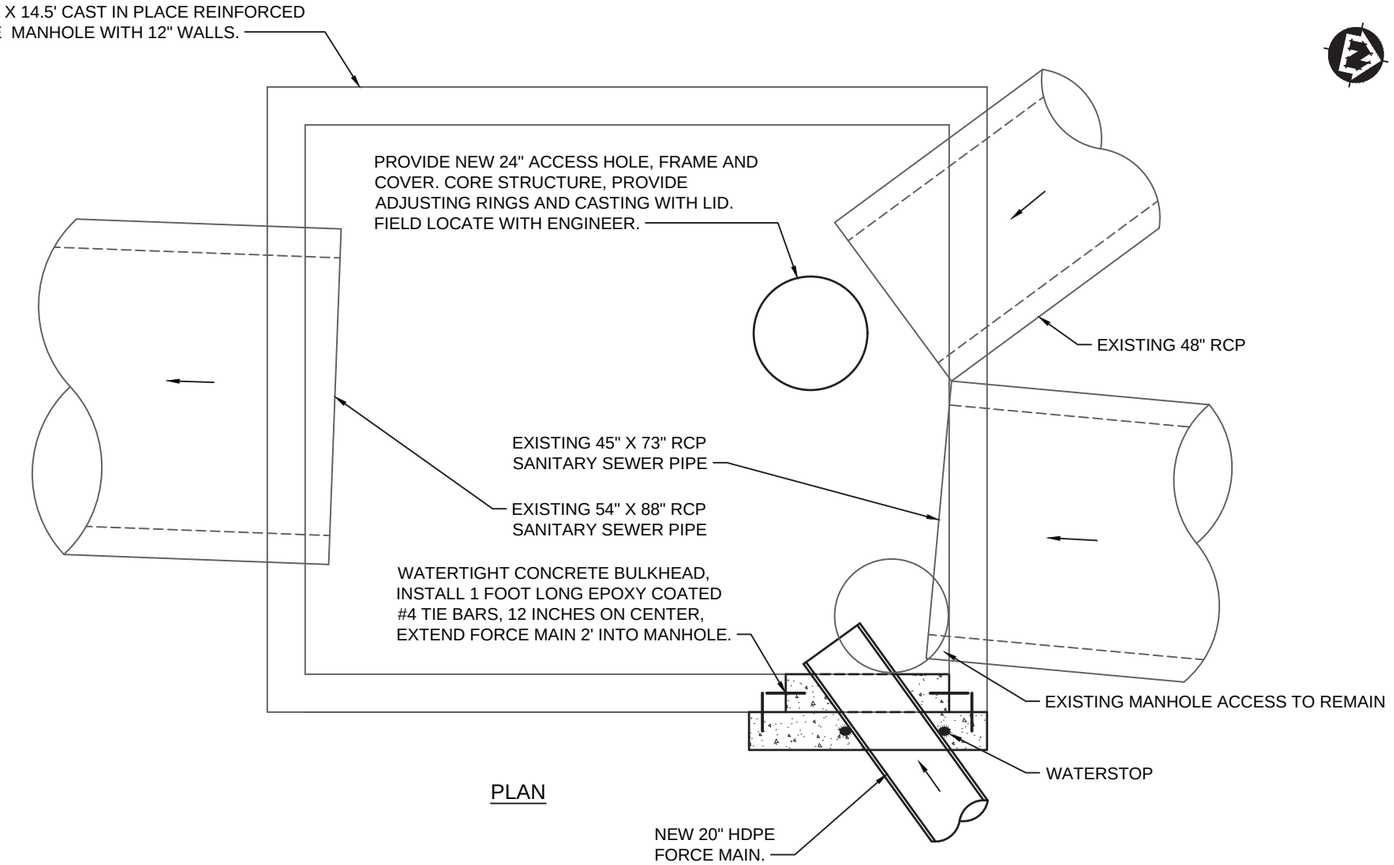

PLAN

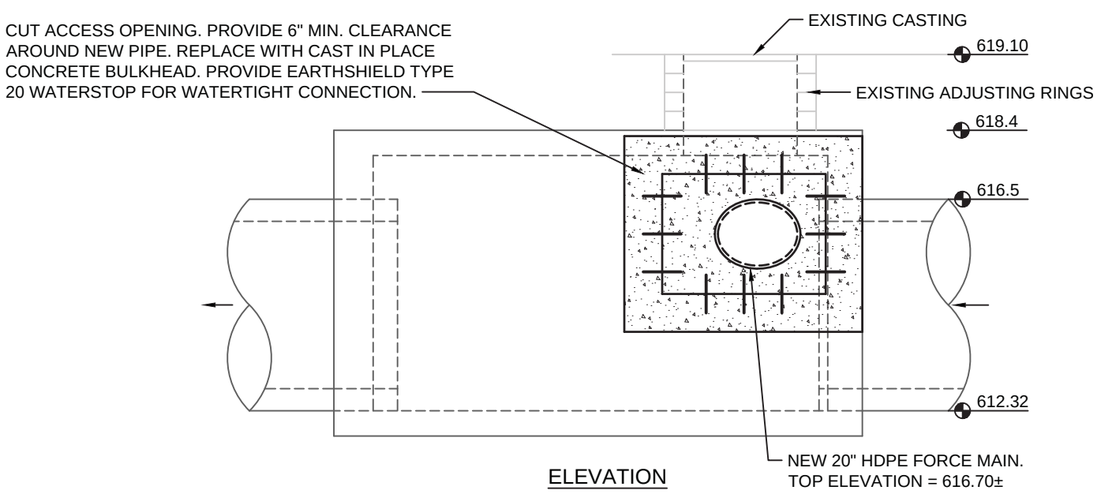

ELEVATION

SW0310038 FORCE MAIN CONNECTION DETAIL

WLSSD EA005 EXISTING MANHOLE
NO SCALE

GENERAL NOTES:

1. CONSTRUCTION ACTIVITIES SHALL BE COORDINATED WITH ENGINEER, CITY, WLSSD, AND THE PROJECT FOREMAN.
2. WORK SHALL BE COMPLETED UNDER LIVE FLOW CONDITIONS. REFER TO SPECIAL PROVISIONS.
3. WORK SHALL BE COMPLETED DURING DRY WEATHER. REFER TO SPECIAL PROVISIONS.

WLSSD MH SW 0310038 STREET VIEW

WLSSD MH SW 0310038 INTERIOR VIEW

		NO.	DATE	REVISION	BY
PROJECT DATE: 1-10-2020	DRAWN BY: -	.	.	.	.
	DESIGNED BY: INIT	.	.	.	.
	CHECKED BY: SCR	.	.	.	.

PLOT DATE: Tuesday, January 14, 2020 1:45:31 PM, P:\610s\616\00616135\CADD\Construction Drawings\2-Site Civil\00616135 Civil Details.dwg

I HEREBY CERTIFY THAT THIS PLAN, REPORT, OR SPECIFICATION WAS PREPARED BY ME OR UNDER MY DIRECT SUPERVISION AND THAT I AM A DULY LICENSED PROFESSIONAL ENGINEER UNDER THE LAWS OF THE STATE OF MINNESOTA.

1/10/2020 Date — 44287 License No.

SCOTT R CHILSON

MSA

ENGINEERING | ARCHITECTURE | SURVEYING
FUNDING | PLANNING | ENVIRONMENTAL
332 W Superior Street, Duluth MN 55802
(218) 722-3915 www.msa-ps.com

© MSA Professional Services, Inc.

LIFT STATION 15 RELOCATION
CITY OF DULUTH, MINNESOTA
2114 W MICHIGAN STREET

SITE CIVIL DETAILS

PROJECT NO. 00616135

SHEET C-13

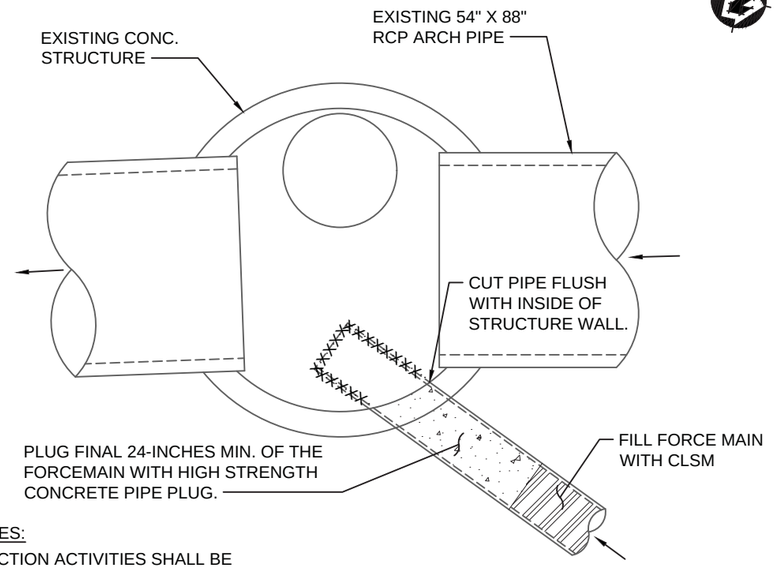

PLAN

GENERAL NOTES:

1. CONSTRUCTION ACTIVITIES SHALL BE COORDINATED WITH ENGINEER, CITY, WLSSD, AND THE PROJECT FOREMAN.
2. WORK SHALL BE COMPLETED UNDER LIVE FLOW CONDITIONS. REFER TO SPECIAL PROVISIONS.
3. WORK SHALL BE COMPLETED DURING DRY WEATHER. REFER TO SPECIAL PROVISIONS.
4. STRUCTURE CONFIGURATION IS UNKNOWN. THE CONTRACTOR SHALL DOCUMENT STRUCTURE DIMENSIONS AND PROVIDE TO ENGINEER.

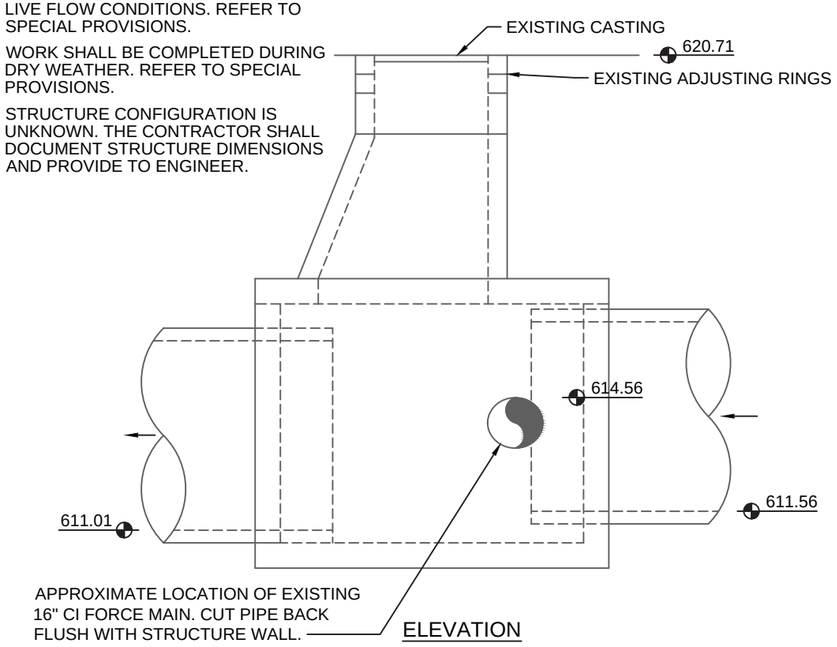

ELEVATION

MANHOLE 39 FORCE MAIN REMOVAL DETAIL

EXISTING MH SW 0310039 (WLSSD EA004)
NO SCALE

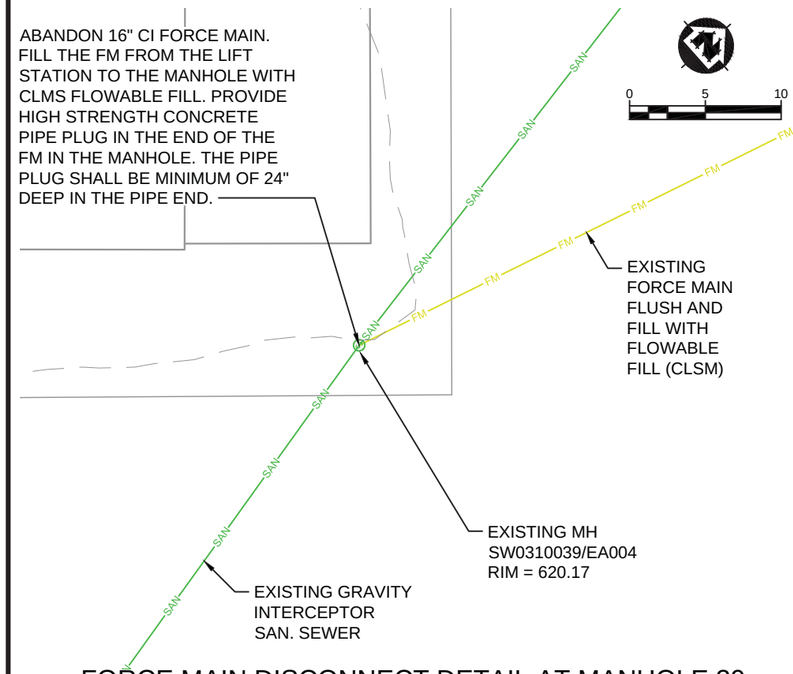

FORCE MAIN DISCONNECT DETAIL AT MANHOLE 39

MH SW0310039 (WLSSD EA004)
SCALE AS INDICATED

MH SW 0310039 (WLSSD EA004) INTERIOR VIEW OF EXISTING FM TO BE ABANDONED

MH SW 0310039 (WLSSD EA004) LOOKING UPSTREAM

		NO.	DATE	REVISION	BY
PROJECT DATE: 1-10-2020	DRAWN BY: -	.	.	.	.
	DESIGNED BY: INIT	.	.	.	.
	CHECKED BY: SCR	.	.	.	.

PLOT DATE: Tuesday, January 14, 2020 1:45:38 PM, P:\610s\616\00616135\CADD\Construction Drawings\2-Site Civil\00616135 Civil Details.dwg

I HEREBY CERTIFY THAT THIS PLAN, REPORT, OR SPECIFICATION WAS PREPARED BY ME OR UNDER MY DIRECT SUPERVISION AND THAT I AM A DULY LICENSED PROFESSIONAL ENGINEER UNDER THE LAWS OF THE STATE OF MINNESOTA.

1/10/2020 Date — 44287 License No.

SCOTT R CHILSON

MSA

ENGINEERING | ARCHITECTURE | SURVEYING
FUNDING | PLANNING | ENVIRONMENTAL
332 W Superior Street, Duluth MN 55802
(218) 722-3915 www.msa-ps.com

© MSA Professional Services, Inc.

LIFT STATION 15 RELOCATION
CITY OF DULUTH, MINNESOTA
2114 W MICHIGAN STREET

SITE CIVIL DETAILS

PROJECT NO. 00616135

SHEET C-14

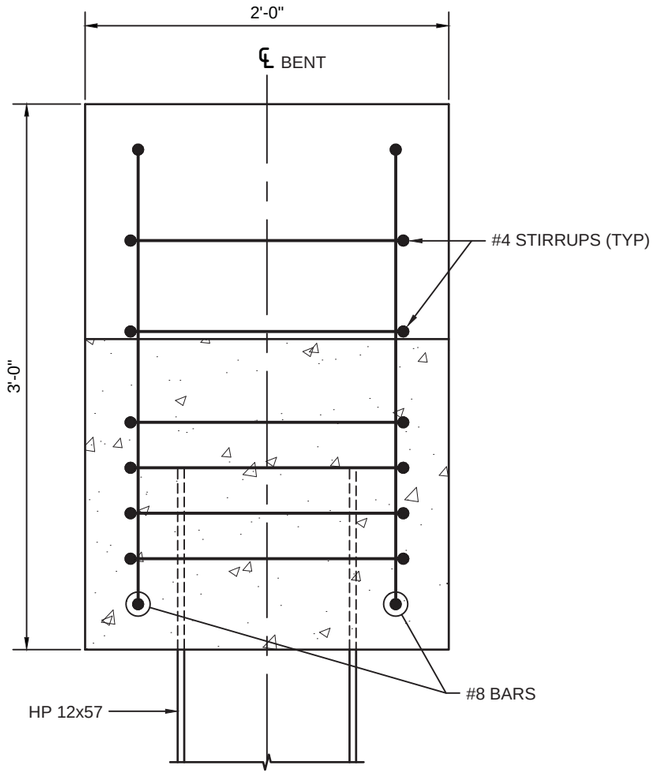

SECTION A-A
NO SCALE

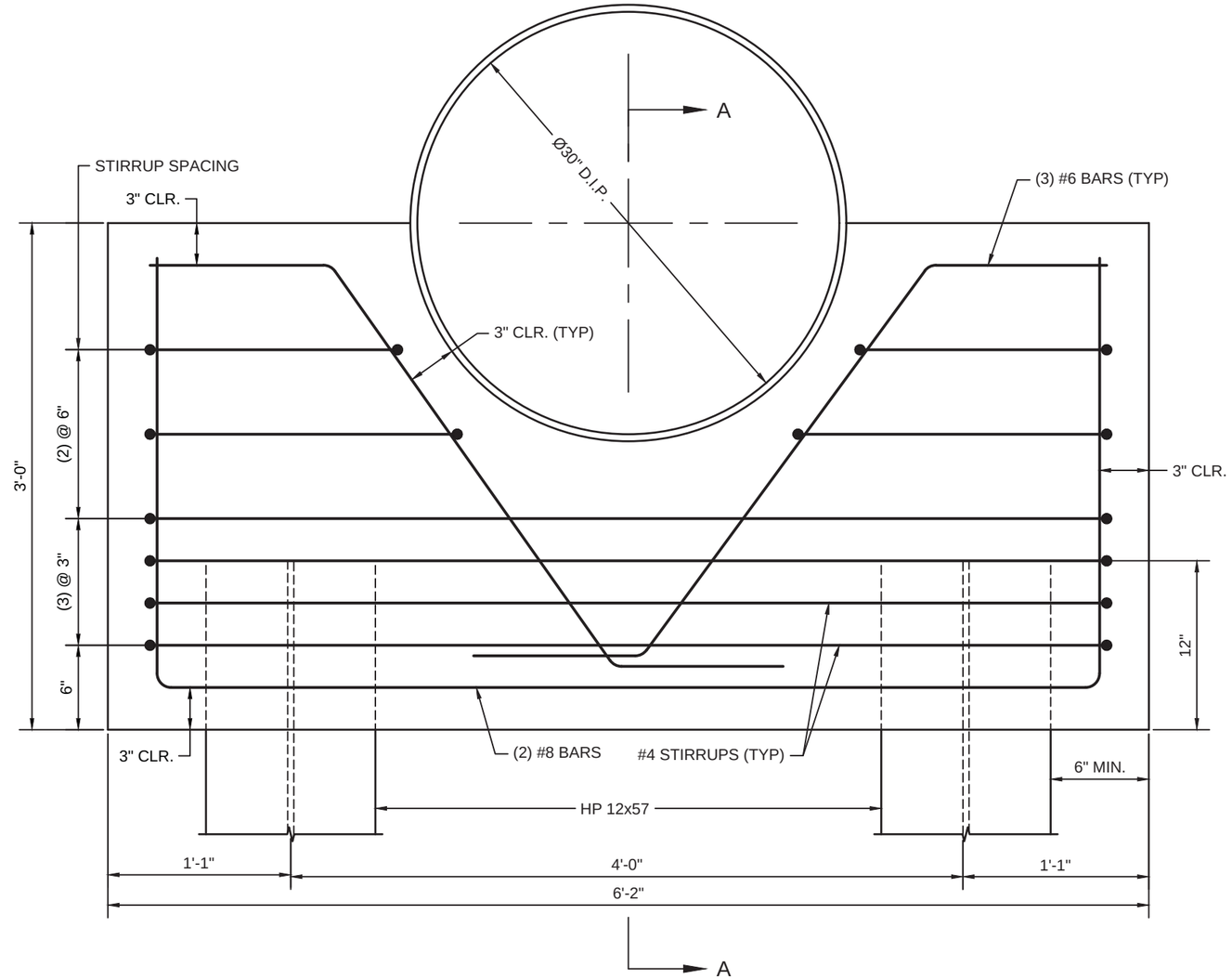

PILE CAP REINFORCEMENT DETAIL
NO SCALE

		NO.	DATE	REVISION	BY
PROJECT DATE: 1-10-2020	DRAWN BY: -	.	.	.	.
	DESIGNED BY: INIT	.	.	.	.
	CHECKED BY: SCR	.	.	.	.

PLOT DATE: Tuesday, January 14, 2020 1:45:41 PM, P:\610s\616\00616135\CADD\Construction Drawings\2-Site Civil\00616135 Civil Details.dwg

I HEREBY CERTIFY THAT THIS PLAN, REPORT, OR SPECIFICATION WAS PREPARED BY ME OR UNDER MY DIRECT SUPERVISION AND THAT I AM A DULY LICENSED PROFESSIONAL ENGINEER UNDER THE LAWS OF THE STATE OF MINNESOTA.

1/10/2020 Date — 44287 License No.

SCOTT R CHILSON

MSA

ENGINEERING | ARCHITECTURE | SURVEYING
FUNDING | PLANNING | ENVIRONMENTAL
332 W Superior Street, Duluth MN 55802
(218) 722-3915 www.msa-ps.com

© MSA Professional Services, Inc.

LIFT STATION 15 RELOCATION
CITY OF DULUTH, MINNESOTA
2114 W MICHIGAN STREET

SITE CIVIL DETAILS

PROJECT NO. 00616135

SHEET C-15

NOT USED

NOT USED

NOT USED

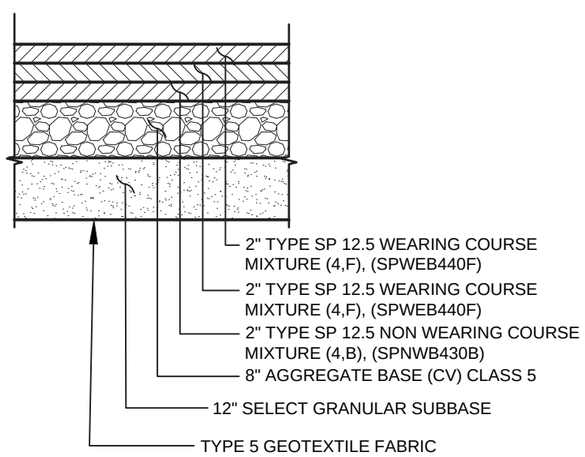

TYPE 1 PAVEMENT SECTION, PERMANENT RESTORATION

NO SCALE

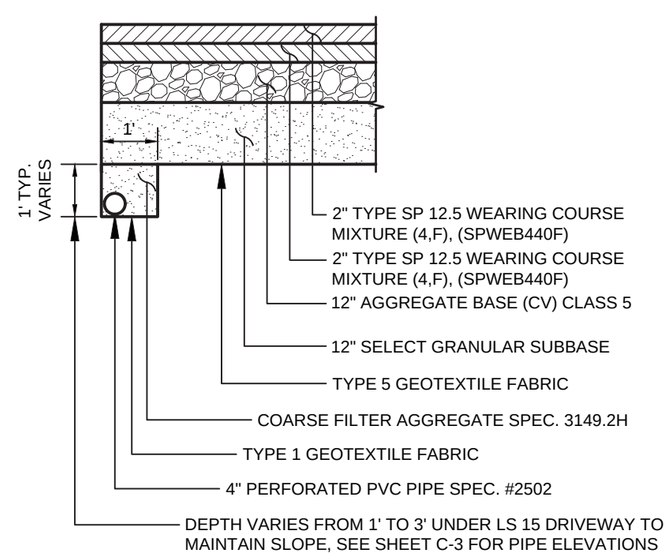

TYPE 2 PAVEMENT SECTION, LS 15 DRIVEWAY

NO SCALE

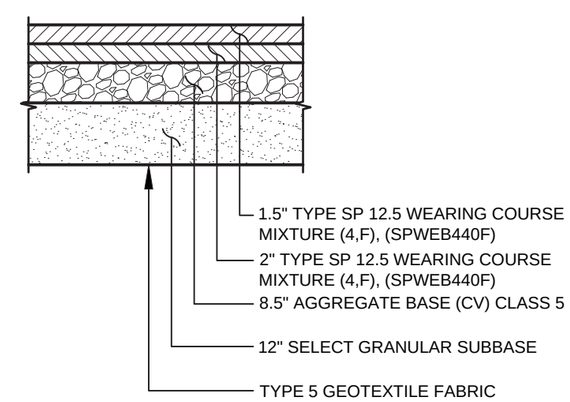

TYPE 3 PAVEMENT SECTION, TEMPORARY

NO SCALE

		NO.	DATE	REVISION	BY
PROJECT DATE: 1-10-2020	DRAWN BY: -	.	.	.	.
	DESIGNED BY: Init	.	.	.	.
	CHECKED BY: SCR	.	.	.	.

PLOT DATE: 1/14/2020 1:45 PM, P:\610s\616\00616135\CADD\Construction Drawings\2-Site Civil\00616135 Civil Details.dwg

I HEREBY CERTIFY THAT THIS PLAN, REPORT, OR SPECIFICATION WAS PREPARED BY ME OR UNDER MY DIRECT SUPERVISION AND THAT I AM A DULY LICENSED PROFESSIONAL ENGINEER UNDER THE LAWS OF THE STATE OF MINNESOTA.

1/10/2020 Date — 44287 License No.

SCOTT R CHILSON

MSA

ENGINEERING | ARCHITECTURE | SURVEYING
FUNDING | PLANNING | ENVIRONMENTAL
332 W Superior Street, Duluth MN 55802
(218) 722-3915 www.msa-ps.com

© MSA Professional Services, Inc.

LIFT STATION 15 RELOCATION
CITY OF DULUTH, MINNESOTA
2114 W MICHIGAN STREET

SITE CIVIL DETAILS

PROJECT NO. 00616135

SHEET C-16

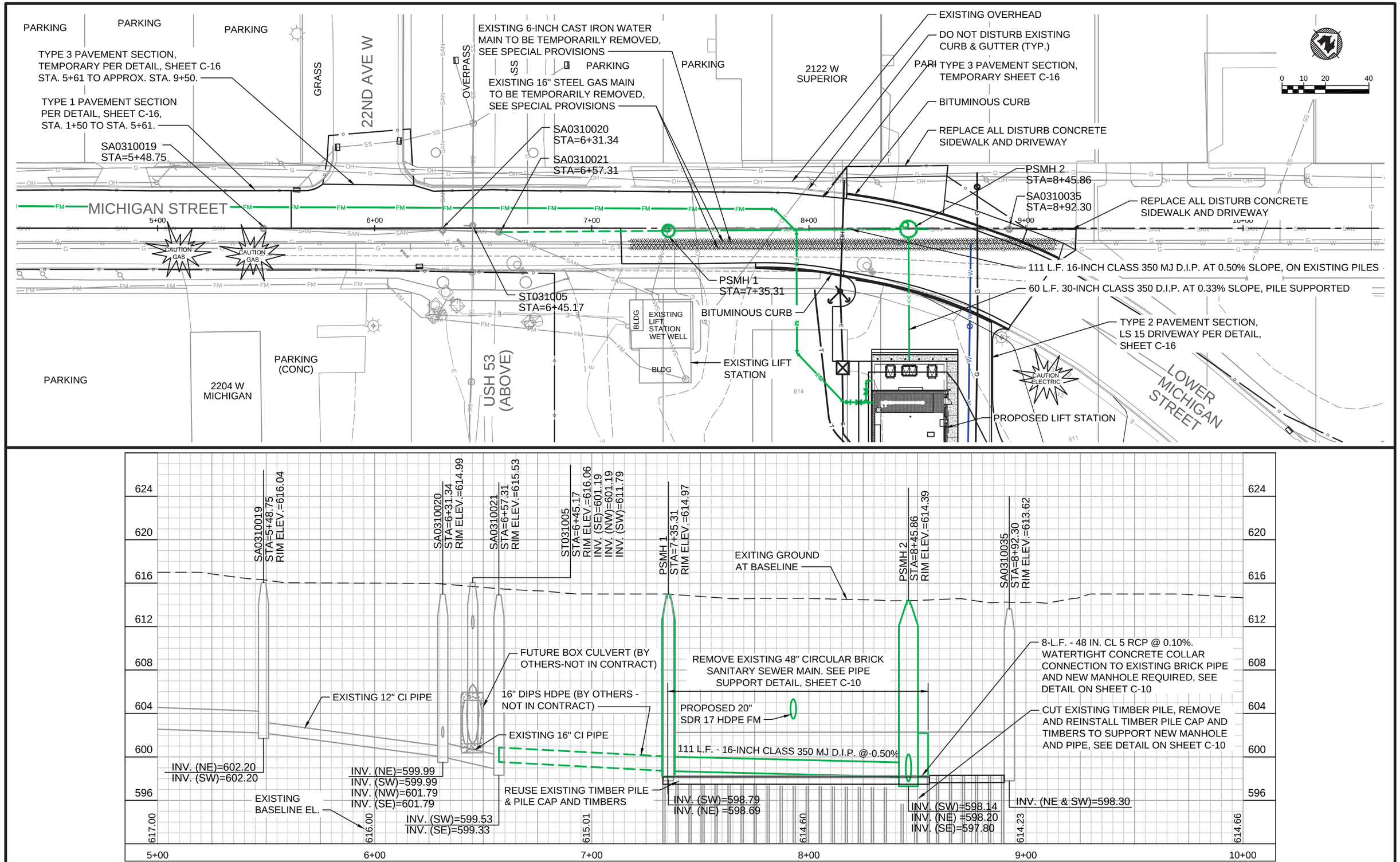

PROJECT NO.: 00616135	SCALE: AS SHOWN	NO.	DATE	REVISION	BY
PROJECT DATE: 1-10-2020	DRAWN BY: -	.	.	.	.
F.B.: .	CHECKED BY: SCR	.	.	.	.
.	.	.	.	.	.

PLOT DATE: 1/15/20, P:\610s\616\00616135\CADD\Construction Drawings\2-Site Civil\00616135 Sanitary Plan_Profile.dwg

I HEREBY CERTIFY THAT THIS PLAN, REPORT, OR SPECIFICATION WAS PREPARED BY ME OR UNDER MY DIRECT SUPERVISION AND THAT I AM A DULY LICENSED PROFESSIONAL ENGINEER UNDER THE LAWS OF THE STATE OF MINNESOTA.

1/10/2020 Date — 44287 License No.

SCOTT R CHILSON

MSA

ENGINEERING | ARCHITECTURE | SURVEYING
FUNDING | PLANNING | ENVIRONMENTAL
332 W Superior Street, Duluth MN 55802
(218) 722-3915 www.msa-ps.com

© MSA Professional Services, Inc.

LIFT STATION 15 RELOCATION
CITY OF DULUTH, MINNESOTA
2114 W MICHIGAN STREET

SANITARY PLAN & PROFILE

FILE NO. 00616135

SHEET PP-1

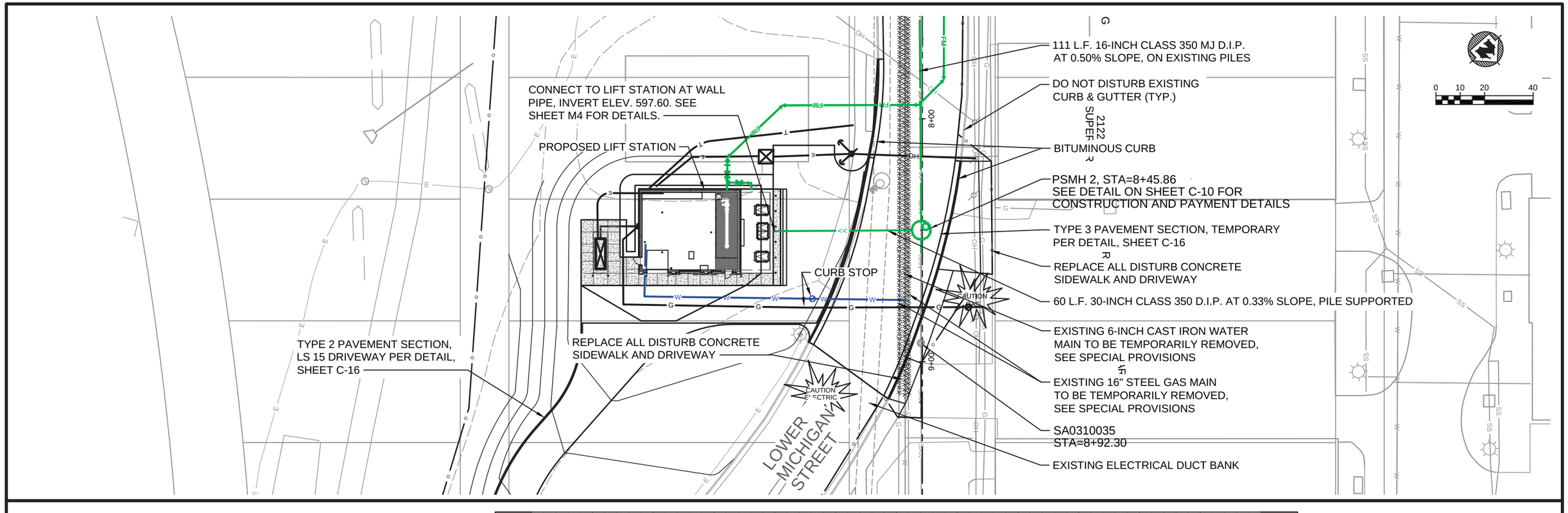

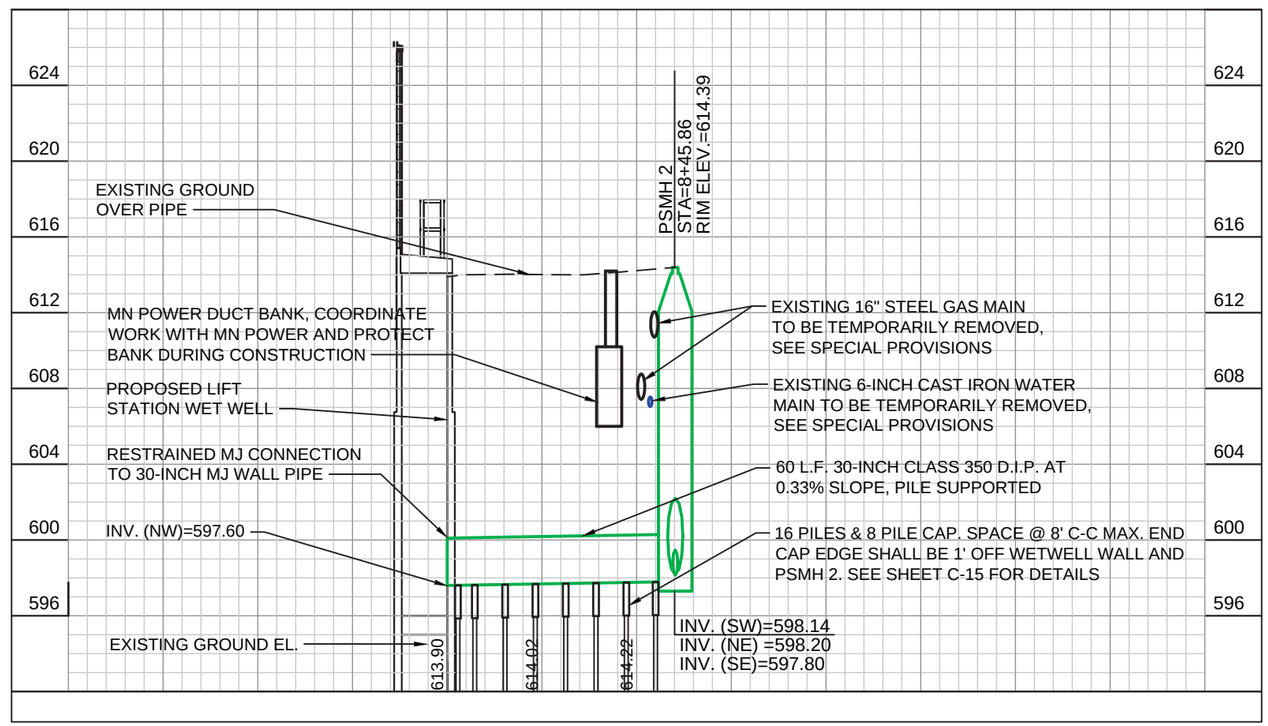

PROJECT NO.: 00616135	SCALE: AS SHOWN	NO.	DATE	REVISION	BY
PROJECT DATE: 1-10-2020	DRAWN BY: -	.	.	.	.
F.B. : .	CHECKED BY: SCR	.	.	.	.
.	.	.	.	.	.

PLOT DATE: 1/14/20, P:\610s\616\00616135\CADD\Construction Drawings\2-Site Civil\00616135 Sanitary Plan_Profile.dwg

I HEREBY CERTIFY THAT THIS PLAN, REPORT, OR SPECIFICATION WAS PREPARED BY ME OR UNDER MY DIRECT SUPERVISION AND THAT I AM A DULY LICENSED PROFESSIONAL ENGINEER UNDER THE LAWS OF THE STATE OF MINNESOTA.

1/10/2020 Date — 44287 License No.

SCOTT R CHILSON

MSA

ENGINEERING | ARCHITECTURE | SURVEYING
FUNDING | PLANNING | ENVIRONMENTAL
332 W Superior Street, Duluth MN 55802
(218) 722-3915 www.msa-ps.com

© MSA Professional Services, Inc.

LIFT STATION 15 RELOCATION
CITY OF DULUTH, MINNESOTA
2114 W MICHIGAN STREET

SANITARY PLAN & PROFILE

FILE NO. 00616135

SHEET PP-2

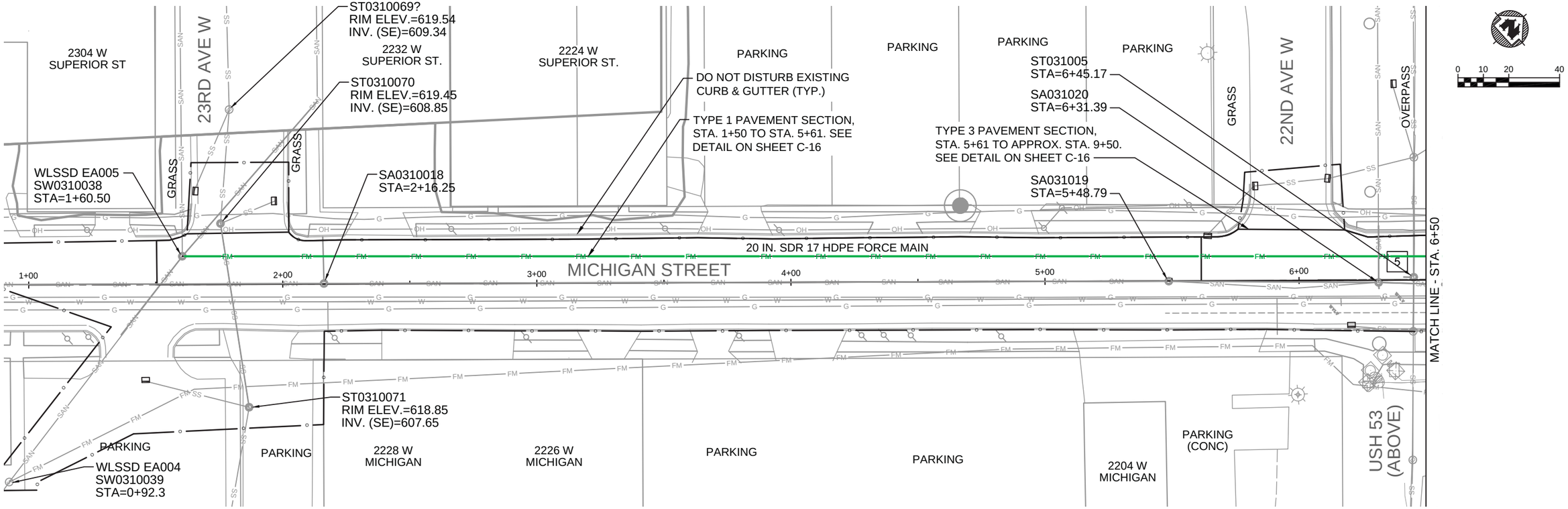

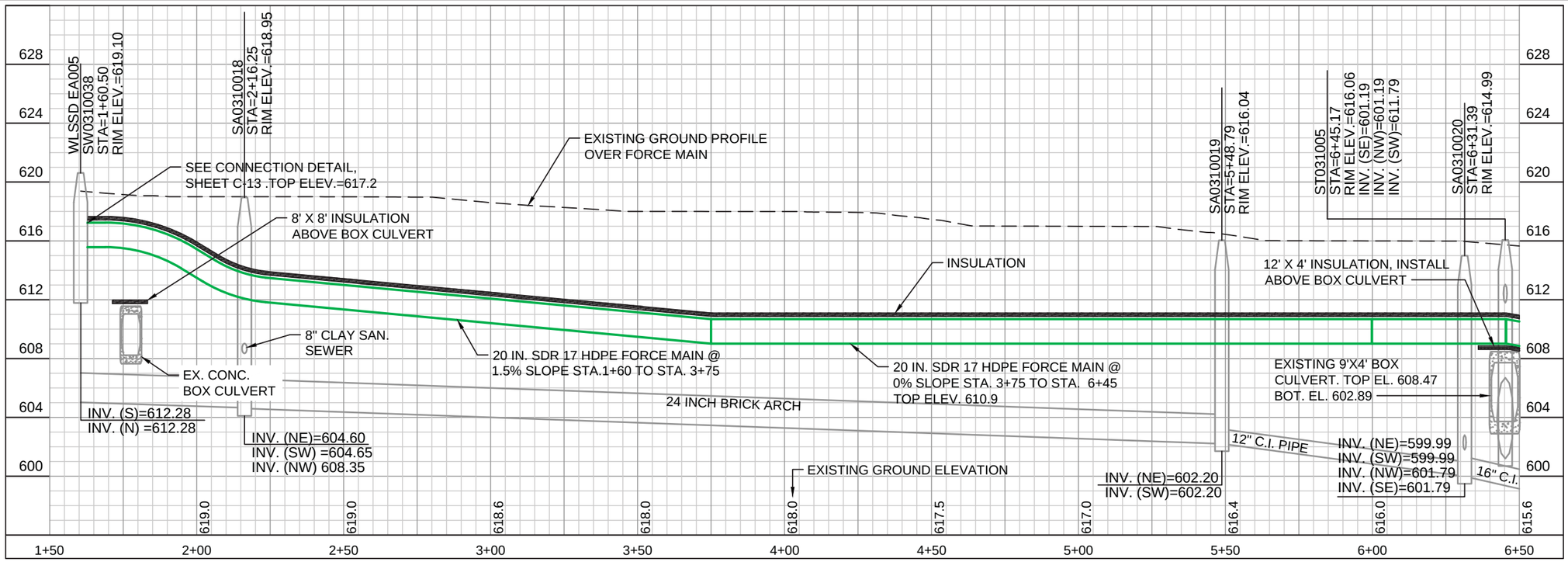

PROJECT NO.: 00616135	SCALE: AS SHOWN	NO.	DATE	REVISION	BY
PROJECT DATE: 1-10-2020	DRAWN BY: -	.	.	.	.
F.B. : .	CHECKED BY: SCR	.	.	.	.
.	.	.	.	.	.

PLOT DATE: 1/14/20, P:\610s\616\00616135\CADD\Construction Drawings\2-Site Civil\00616135 FM Plan_Profile.dwg

I HEREBY CERTIFY THAT THIS PLAN, REPORT, OR SPECIFICATION WAS PREPARED BY ME OR UNDER MY DIRECT SUPERVISION AND THAT I AM A DULY LICENSED PROFESSIONAL ENGINEER UNDER THE LAWS OF THE STATE OF MINNESOTA.

1/10/2020 Date — 44287 License No.

SCOTT R CHILSON

MSA

ENGINEERING | ARCHITECTURE | SURVEYING
FUNDING | PLANNING | ENVIRONMENTAL
332 W Superior Street, Duluth MN 55802
(218) 722-3915 www.msa-ps.com

© MSA Professional Services, Inc.

LIFT STATION 15 RELOCATION
CITY OF DULUTH, MINNESOTA
2114 W MICHIGAN STREET

FORCE MAIN PLAN & PROFILE

FILE NO. 00616135

SHEET PP-3

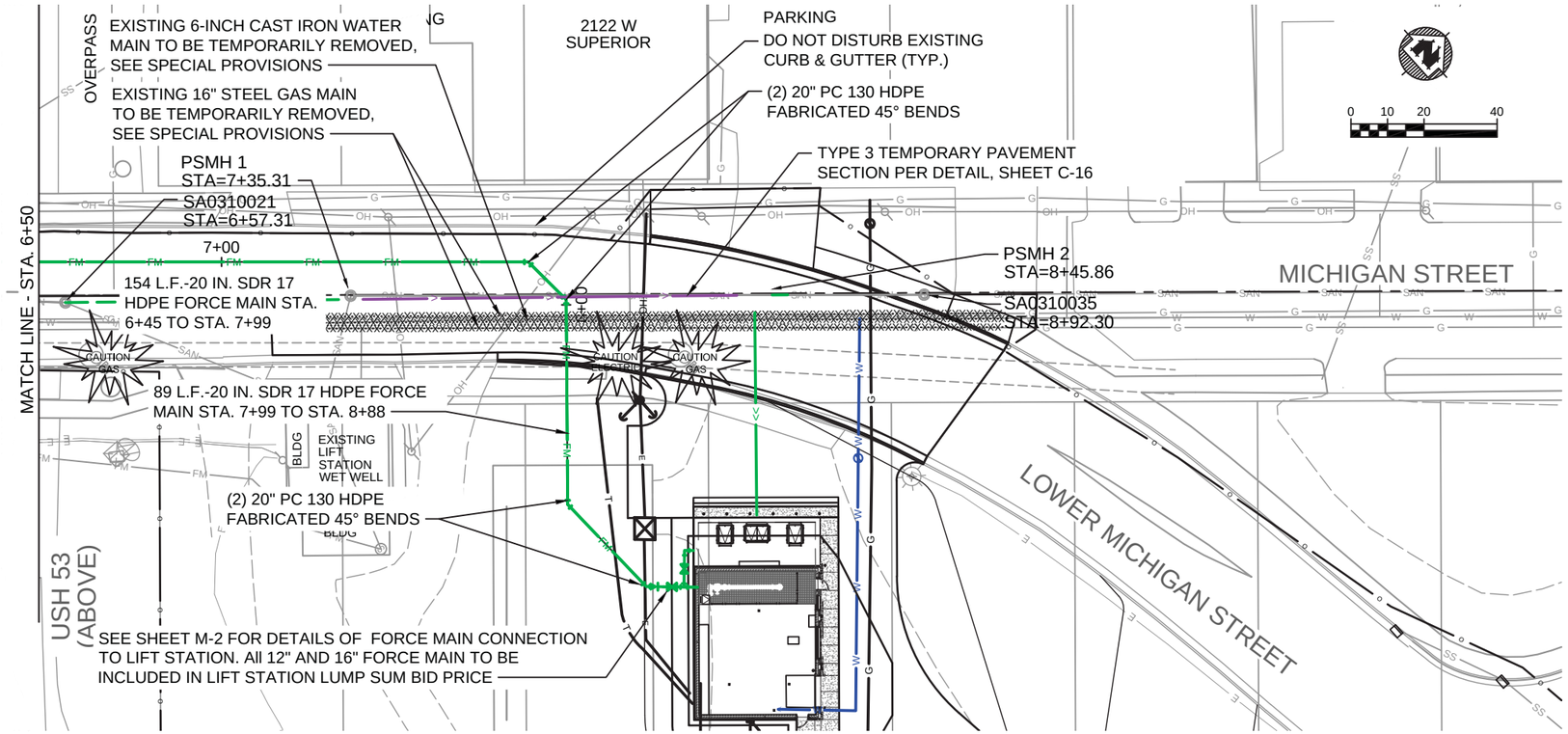

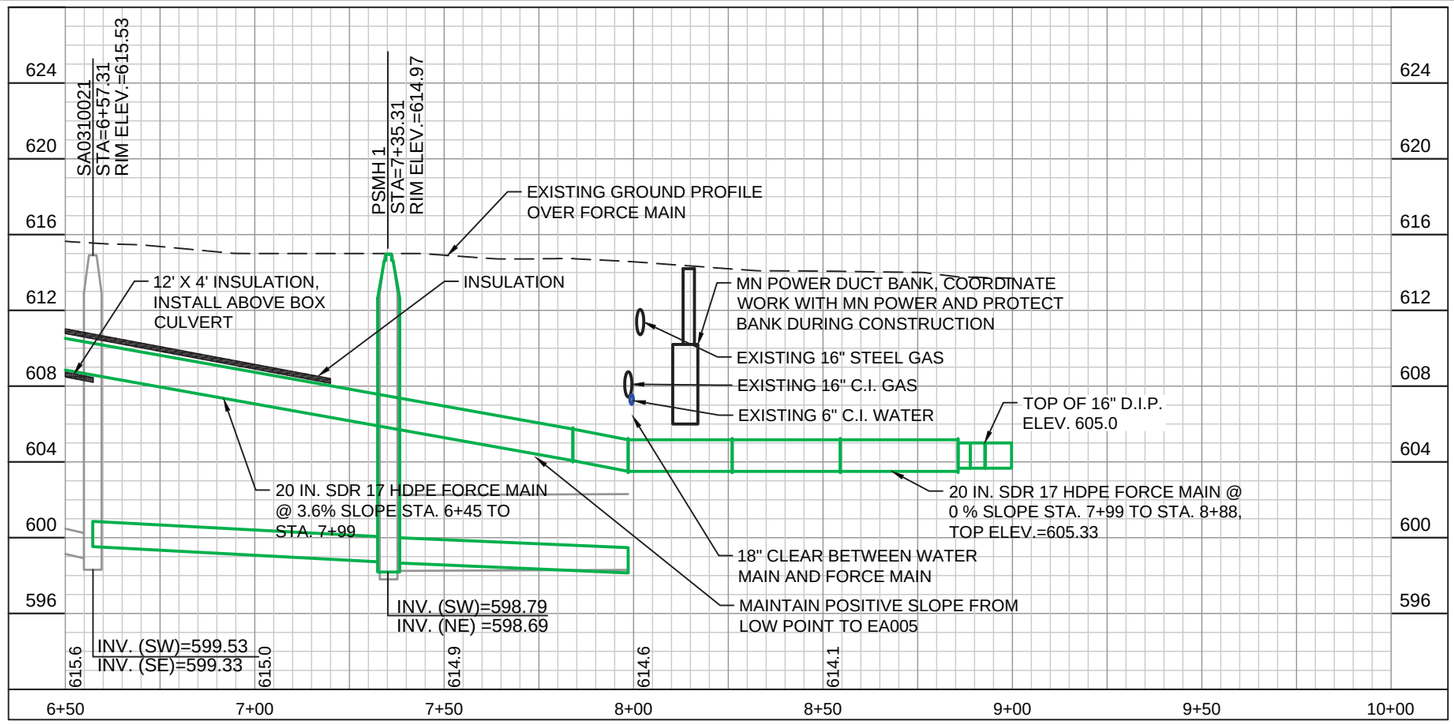

NOTE: PROFILE FOLLOWS SEWER FORCEMAIN ALIGNMENT

PROJECT NO.: 00616135	SCALE: AS SHOWN	NO.	DATE	REVISION	BY
PROJECT DATE: 1-10-2020	DRAWN BY: -	.	.	.	.
F.B. : .	CHECKED BY: SCR	.	.	.	.
.	.	.	.	.	.

PLOT DATE: 1/14/20, P:\610s\616\00616135\CADD\Construction Drawings\2-Site Civil\00616135 FM Plan_Profile.dwg

I HEREBY CERTIFY THAT THIS PLAN, REPORT, OR SPECIFICATION WAS PREPARED BY ME OR UNDER MY DIRECT SUPERVISION AND THAT I AM A DULY LICENSED PROFESSIONAL ENGINEER UNDER THE LAWS OF THE STATE OF MINNESOTA.

1/10/2020 Date — 44287 License No.

SCOTT R CHILSON

MSA

ENGINEERING | ARCHITECTURE | SURVEYING
FUNDING | PLANNING | ENVIRONMENTAL
332 W Superior Street, Duluth MN 55802
(218) 722-3915 www.msa-ps.com

© MSA Professional Services, Inc.

LIFT STATION 15 RELOCATION
CITY OF DULUTH, MINNESOTA
2114 W MICHIGAN STREET

FORCE MAIN PLAN & PROFILE

FILE NO. 00616135

SHEET PP-4

NOTES & GUIDELINES

GENERAL INFORMATION:

1. ALL TRAFFIC CONTROL DEVICES SHALL CONFORM TO THE LATEST EDITION OF THE MINNESOTA MANUAL ON UNIFORM TRAFFIC CONTROL DEVICES, INCLUDING THE LATEST FIELD MANUAL FOR TEMPORARY TRAFFIC CONTROL ZONE LAYOUTS.
2. THE CONTRACTOR SHALL FURNISH, INSTALL AND MAINTAIN THE DEVICES IN THIS TRAFFIC CONTROL PLAN UNLESS OTHERWISE NOTED.
3. FIELD CONDITIONS MAY REQUIRE MODIFICATIONS OF THIS LAYOUT AS DEEMED NECESSARY BY THE ENGINEER.
4. ALL DISTANCES ARE APPROXIMATE.
5. THE CONTRACTOR IS RESPONSIBLE FOR PROTECTING ANY WORK AREAS NEAR TRAFFIC IN ACCORDANCE WITH THE MN MUTCD.
6. IF THE CONTRACTOR DECIDES TO PERFORM THE CONSTRUCTION WORK IN A SEQUENCE OTHER THAN SHOWN IN THIS TRAFFIC CONTROL PLAN THE CONTRACTOR SHALL PROVIDE COMPLETE REVISED TRAFFIC CONTROL PLANS TO BE APPROVED BY THE ENGINEER.

SIGNING:

1. ALL TRAFFIC CONTROL DEVICES, INCLUDING OVERHEAD SIGNS ON ROADS OPEN TO TRAFFIC THAT ARE NOT CONSISTENT WITH TRAFFIC OPERATION SHALL BE COVERED, REMOVED OR REVISED AS DIRECTED BY THE ENGINEER.
2. WHEN SIGNS ARE PLACED, THEY SHALL BE MOUNTED ON POSTS DRIVEN INTO THE GROUND AT THE PROPER HEIGHT AND LATERAL OFFSET AS SHOWN IN THE TYPICAL TEMP SIGN FRAMING & INSTALLATION DETAILS IN THE PLAN. IF THIS IS NOT POSSIBLE THEY WILL BE MOUNTED ON PORTABLE SUPPORTS AS APPROVED BY THE ENGINEER. WHEN THE SIGNS ARE REMOVED THE SIGN POSTS SHALL ALSO BE REMOVED AS SOON AS POSSIBLE.
3. THE CONTRACTOR SHALL BE RESPONSIBLE FOR ANY EXTRA SIGNING NEEDED TO FACILITATE TRAFFIC SWITCHES OR FOR TRANSITIONING TRAFFIC FROM ONE STAGE TO ANOTHER.
4. ALL ORANGE WARNING AND ORANGE GUIDE SIGNS SHALL BE FABRICATED WITH SIGN SHEETING MATERIAL AS LISTED ON THE MNDOT APPROVED PRODUCT LIST FOR "SHEETING FOR RIGID TEMPORARY WORK ZONE SIGNS".
5. BARRICADES SHALL BE FABRICATED WITH SIGN SHEETING MATERIAL AS LISTED ON THE MnDOT APPROVED PRODUCT LIST FOR BARRICADE SHEETING.
6. LONGITUDINAL DROPOFFS SHALL BE SIGNED AS SHOWN IN THE "TEMPORARY TRAFFIC CONTROL ZONE LAYOUTS" FIELD MANUAL UNLESS OTHERWISE SPECIFIED IN THESE PLANS.
7. THE CONTRACTOR SHALL COORDINATE THE INSTALLATION OF THE FINAL SIGNS TO ASSURE THAT THE FINAL SIGNS ARE PLACED AS NEEDED, OR PROVIDE TEMPORARY SIGNING AT THEIR EXPENSE UNTIL THE FINAL SIGNING IS PLACED.

TRAFFIC CONTROL DEVICES & SYMBOLS LEGEND

SYMBOL DESCRIPTION

- AREA CLOSED TO TRAFFIC / WORK AREA
- TRAFFIC CONTROL SIGN
- TYPE III BARRICADE =
- DRUM-LIKE CHANNELIZER (TYPE B) =

INDEX

TRAFFIC CONTROL SHEET NO. DESCRIPTIONS

TC-1	TITLE SHEET & WORK ZONE OVERVIEW
TC-2	TRAFFIC CONTROL PLAN - STAGE 1
TC-3	TRAFFIC CONTROL PLAN - STAGE 2

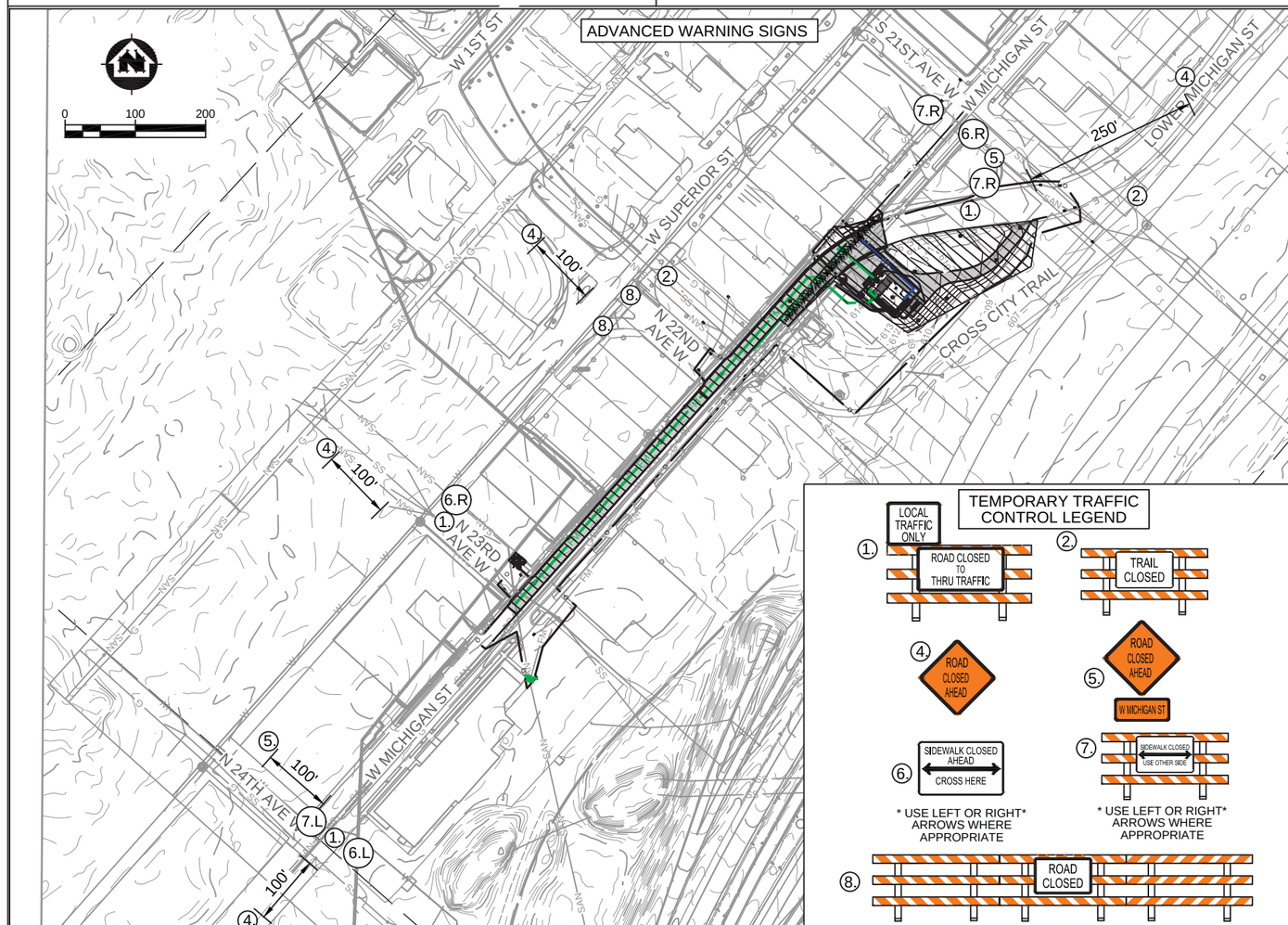

		NO.	DATE	REVISION	BY
PROJECT DATE: 1-10-2020	DRAWN BY: -	.	.	.	.
	DESIGNED BY: INIT	.	.	.	.
	CHECKED BY: SCR	.	.	.	.

PLOT DATE: Tuesday, January 14, 2020 1:51:04 PM, P:\610s\616\00616135\CADD\Construction Drawings\2-Site Civil\00616135 Traffic Control Plan.dwg

I HEREBY CERTIFY THAT THIS PLAN, REPORT, OR SPECIFICATION WAS PREPARED BY ME OR UNDER MY DIRECT SUPERVISION AND THAT I AM A DULY LICENSED PROFESSIONAL ENGINEER UNDER THE LAWS OF THE STATE OF MINNESOTA.

1/10/2020 Date

46075 License No.

JASON DIPIAZZA

MSA

ENGINEERING | ARCHITECTURE | SURVEYING
FUNDING | PLANNING | ENVIRONMENTAL
332 W Superior Street, Duluth MN 55802
(218) 722-3915 www.msa-ps.com

© MSA Professional Services, Inc.

LIFT STATION 15 RELOCATION
CITY OF DULUTH, MINNESOTA
2114 W MICHIGAN STREET

TITLE SHEET & ADVANCE SIGNING

PROJECT NO. 00616135

SHEET TC-1

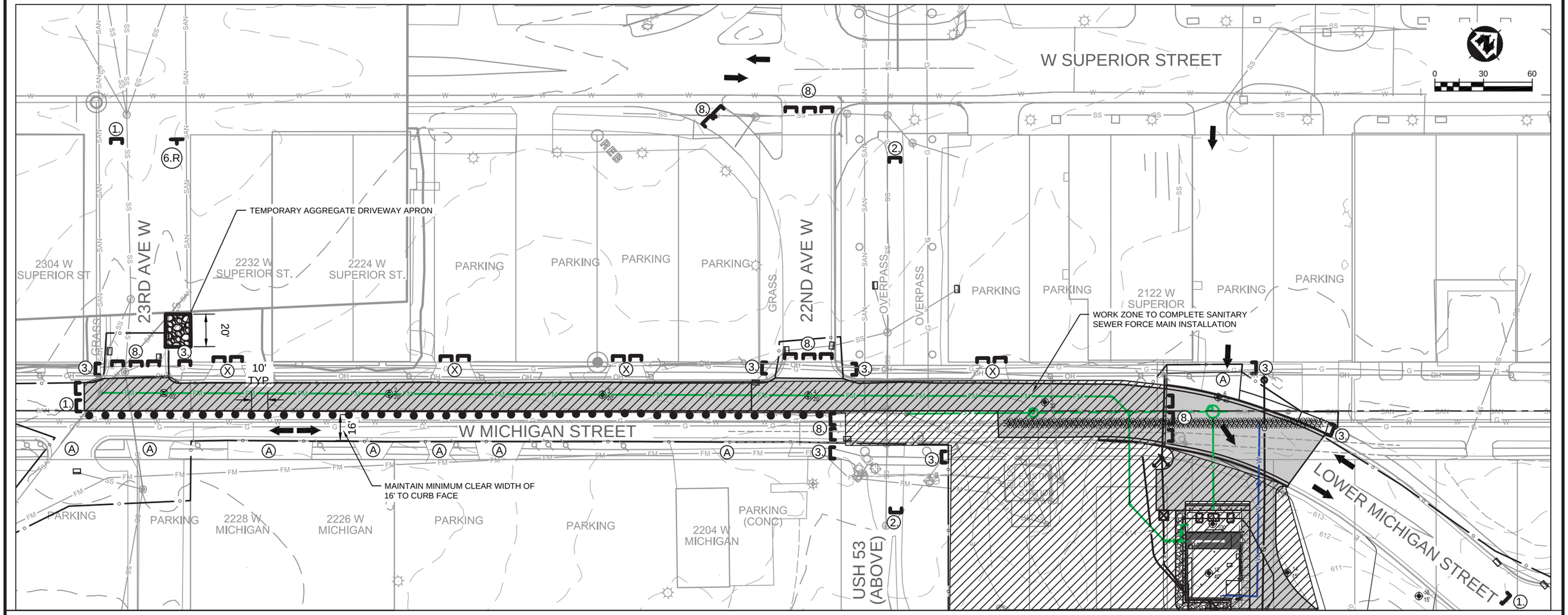

TEMPORARY TRAFFIC CONTROL LEGEND

SPECIAL
24" X 18"
LOCAL TRAFFIC ONLY

1. ROAD CLOSED TO THRU TRAFFIC
R11-3
60" X 30"

2. TRAIL CLOSED
R9-9a
24" X 18"

8. ROAD CLOSED
R11-2
48" X 30"

3. SIDEWALK CLOSED
R9-9
30" X 18"

6. SIDEWALK CLOSED AHEAD
CROSS HERE
* USE LEFT OR RIGHT* ARROWS WHERE APPROPRIATE
R9-11
24" X 12"

(X) CLOSE DRIVEWAY ACCESS
(A) MAINTAIN DRIVEWAY ACCESS AT ALL TIMES

PROJECT NO.:	00616135	SCALE: AS SHOWN	NO.	DATE	
PROJECT DATE:	1-10-2020	DRAWN BY:			
F.B.:		CHECKED BY: SCR			

PLOT DATE: 1/14/20, P:\610s\616\00616135\CADD\Construction Drawings\2-Site Civil\00616135 Traffic Control Plan.dwg

I HEREBY CERTIFY THAT THIS PLAN, REPORT, OR SPECIFICATION WAS PREPARED BY ME OR UNDER MY DIRECT SUPERVISION AND THAT I AM A DULY LICENSED PROFESSIONAL ENGINEER UNDER THE LAWS OF THE STATE OF MINNESOTA.

1/10/2020 Date
46075 License No.
SCOTT R CHILSON

MSA
ENGINEERING | ARCHITECTURE | SURVEYING
FUNDING | PLANNING | ENVIRONMENTAL
332 W Superior Street, Duluth MN 55802
(218) 722-3915 www.msa-ps.com
© MSA Professional Services, Inc.

LIFT STATION 15 RELOCATION
CITY OF DULUTH, MINNESOTA
2114 W MICHIGAN STREET

TRAFFIC CONTROL PLAN - STAGE 1

FILE NO. 00616135
SHEET TC-2

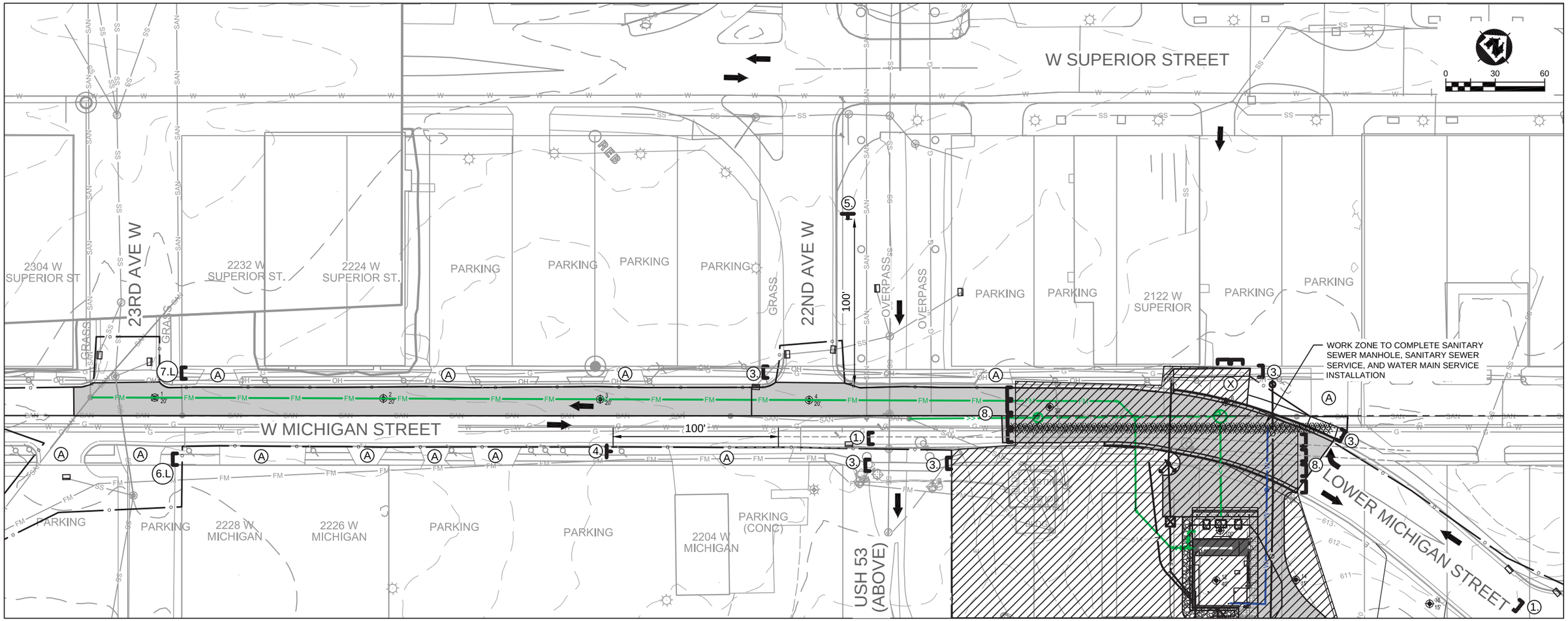

TEMPORARY TRAFFIC CONTROL LEGEND

SPECIAL
24" X 18"
1. LOCAL TRAFFIC ONLY / ROAD CLOSED TO THRU TRAFFIC
R11-3
60" X 30"

2. TRAIL CLOSED
R9-9a
24" X 18"

3. SIDEWALK CLOSED
R9-9
30" X 18"

4. ROAD CLOSED AHEAD
W20-3
30" X 18"

5. ROAD CLOSED AHEAD / W MICHIGAN ST
W20-3
30" X 18"
SPECIAL
VARIES X 12"

6. SIDEWALK CLOSED AHEAD / CROSS HERE
* USE LEFT OR RIGHT* ARROWS WHERE APPROPRIATE
R9-11
24" X 12"

7. SIDEWALK CLOSED / USE OTHER SIDE
* USE LEFT OR RIGHT* ARROWS WHERE APPROPRIATE
R9-10
48" X 24"

8. ROAD CLOSED
R11-2
48" X 30"

(X) CLOSE DRIVEWAY ACCESS
(A) MAINTAIN DRIVEWAY ACCESS AT ALL TIMES

		NO.	DATE	REVISION	BY
PROJECT DATE: 1-10-2020	DRAWN BY: -	.	.	.	.
	DESIGNED BY: INIT	.	.	.	.
	CHECKED BY: SCR	.	.	.	.

PLOT DATE: Tuesday, January 14, 2020 1:51:20 PM, P:\610s\616\00616135\CADD\Construction Drawings\2-Site Civil\00616135 Traffic Control Plan.dwg

I HEREBY CERTIFY THAT THIS PLAN, REPORT, OR SPECIFICATION WAS PREPARED BY ME OR UNDER MY DIRECT SUPERVISION AND THAT I AM A DULY LICENSED PROFESSIONAL ENGINEER UNDER THE LAWS OF THE STATE OF MINNESOTA.

1/10/2020 Date — 46075 License No.

SCOTT R CHILSON

MSA

ENGINEERING | ARCHITECTURE | SURVEYING
FUNDING | PLANNING | ENVIRONMENTAL
332 W Superior Street, Duluth MN 55802
(218) 722-3915 www.msa-ps.com

© MSA Professional Services, Inc.

LIFT STATION 15 RELOCATION
CITY OF DULUTH, MINNESOTA
2114 W MICHIGAN STREET

TRAFFIC CONTROL PLAN - STAGE 2

PROJECT NO. 00616135

SHEET TC-3

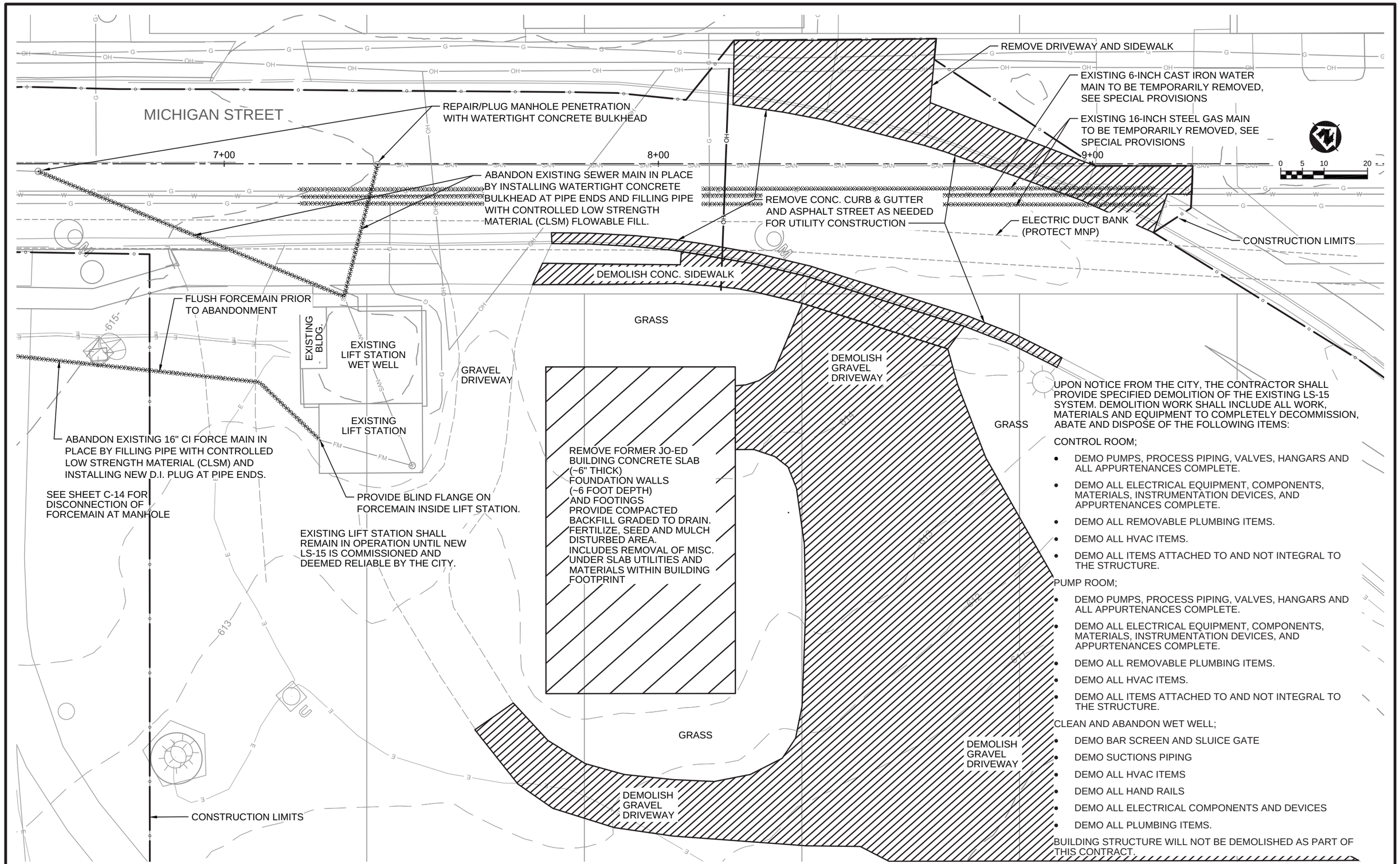

UPON NOTICE FROM THE CITY, THE CONTRACTOR SHALL PROVIDE SPECIFIED DEMOLITION OF THE EXISTING LS-15 SYSTEM. DEMOLITION WORK SHALL INCLUDE ALL WORK, MATERIALS AND EQUIPMENT TO COMPLETELY DECOMMISSION, ABATE AND DISPOSE OF THE FOLLOWING ITEMS:

CONTROL ROOM;

- DEMO PUMPS, PROCESS PIPING, VALVES, HANGARS AND ALL APPURTENANCES COMPLETE.
- DEMO ALL ELECTRICAL EQUIPMENT, COMPONENTS, MATERIALS, INSTRUMENTATION DEVICES, AND APPURTENANCES COMPLETE.
- DEMO ALL REMOVABLE PLUMBING ITEMS.
- DEMO ALL HVAC ITEMS.
- DEMO ALL ITEMS ATTACHED TO AND NOT INTEGRAL TO THE STRUCTURE.

PUMP ROOM;

- DEMO PUMPS, PROCESS PIPING, VALVES, HANGARS AND ALL APPURTENANCES COMPLETE.
- DEMO ALL ELECTRICAL EQUIPMENT, COMPONENTS, MATERIALS, INSTRUMENTATION DEVICES, AND APPURTENANCES COMPLETE.
- DEMO ALL REMOVABLE PLUMBING ITEMS.
- DEMO ALL HVAC ITEMS.
- DEMO ALL ITEMS ATTACHED TO AND NOT INTEGRAL TO THE STRUCTURE.

CLEAN AND ABANDON WET WELL;

- DEMO BAR SCREEN AND SLUICE GATE
- DEMO SUCTIONS PIPING
- DEMO ALL HVAC ITEMS
- DEMO ALL HAND RAILS
- DEMO ALL ELECTRICAL COMPONENTS AND DEVICES
- DEMO ALL PLUMBING ITEMS.

BUILDING STRUCTURE WILL NOT BE DEMOLISHED AS PART OF THIS CONTRACT.

PROJECT NO.: 00616135	SCALE: AS SHOWN	NO.	DATE	REVISION	BY
PROJECT DATE: 1-10-2020	DRAWN BY: -	.	.	.	.
F.B.: .	CHECKED BY: SCR	.	.	.	.
.	.	.	.	.	.

PLOT DATE: 1/14/20. P:\610s\616\00616135\CADD\Construction Drawings\2-Site Civil\00616135 Site Plan.dwg

I HEREBY CERTIFY THAT THIS PLAN, REPORT, OR SPECIFICATION WAS PREPARED BY ME OR UNDER MY DIRECT SUPERVISION AND THAT I AM A DULY LICENSED PROFESSIONAL ENGINEER UNDER THE LAWS OF THE STATE OF MINNESOTA.

1/10/2020 Date — 44287 License No.

SCOTT R CHILSON

MSA

ENGINEERING | ARCHITECTURE | SURVEYING
FUNDING | PLANNING | ENVIRONMENTAL
332 W Superior Street, Duluth MN 55802
(218) 722-3915 www.msa-ps.com

© MSA Professional Services, Inc.

LIFT STATION 15 RELOCATION
CITY OF DULUTH, MINNESOTA
2114 W MICHIGAN STREET

SITE CIVIL DEMOLITION

FILE NO. 00616135

SHEET RC-1

DEMOLITION GENERAL NOTES

1. THE GENERAL CONTRACTOR SHALL COORDINATE AND PROVIDE ALL DEMOLITION AND REMOVAL OF DEBRIS NECESSARY TO ACCOMMODATE NEW CONSTRUCTION.
2. DEMOLITION PLAN IS PROVIDED AS AN AID IN PLANNING AND DOES NOT RELIEVE CONTRACTORS RESPONSIBILITY TO FIELD VERIFY THE EXISTING JOB SITE.
3. DEMOLITION PLAN SHALL BE USED IN CONJUNCTION WITH THE REMAINDER OF THE SHEETS IN THIS SET.
4. REMOVE EXISTING CONCRETE SLABS AS REQUIRED FOR PROCESS MECHANICAL, HVAC, AND ELECTRICAL WORK.
5. ALL AREAS, FINISHED, AND ITEMS NOT REQUIRING DEMOLITION MUST BE PROTECTED DURING DEMOLITION AND CONSTRUCTION WORK.
6. REFERENCE HVAC AND ELECTRICAL SHEETS FOR ADDITIONAL ITEMS TO BE REMOVED AND OR RELOCATED.
7. PRIOR TO START OF DEMOLITION WORK, VERIFY WITH THE OWNER ALL ITEMS TO BE TURNED OVER TO THE OWNER. ALL OTHER ITEMS TO BE REMOVED SHALL BE RESPONSIBILITY OF THE GC.

DEMOLITION PHASE ELECTRICAL REQUIREMENTS

1. DEMOLISH HEATER
2. EXHAUST FAN TO REMAIN
3. GRAVITY VENT TO REMAIN
4. ACCESS HATCH TO REMAIN
5. SLUICE GATE OPERATOR TO REMAIN
6. MOTORIZED FRESH INTAKE W/ WEATHER PROOF LOUVERS TO REMAIN
7. DEMOLISH DEVICE
8. DEMOLISH RWW PUMP(S)
9. DEMOLISH VALVES
10. DEMOLISH TRASH RACK
11. DEMOLISH SLIDE GATE
12. DECOMMISSION, DISCONNECT, DEMOLISH AND DISPOSE ALL EXISTING EQUIPMENT, DEVICES AND MATERIALS. PATCH UNUSED PENETRATIONS.
13. PIPE TO REMAIN, ABANDON AND FILL. PROVIDE BLIND FLANGE.
14. DRAIN FM BACK INTO WETWELL. DISPOSE OF RWW, SCUM, SLUDGE, FOG, GRIT. CLEAN WETWELL (REFER TO SPECIFICATION)
15. DEMOLISH SUMP EQUIPMENT
16. PLUG AND ABANDON 48" GRAVITY SEWER LINE AND 24" RCP PRESSURE SEWER LINE WITH CONCRETE
17. EXISTING SERVICE POLE W/METER AND RED WARNING LIGHT

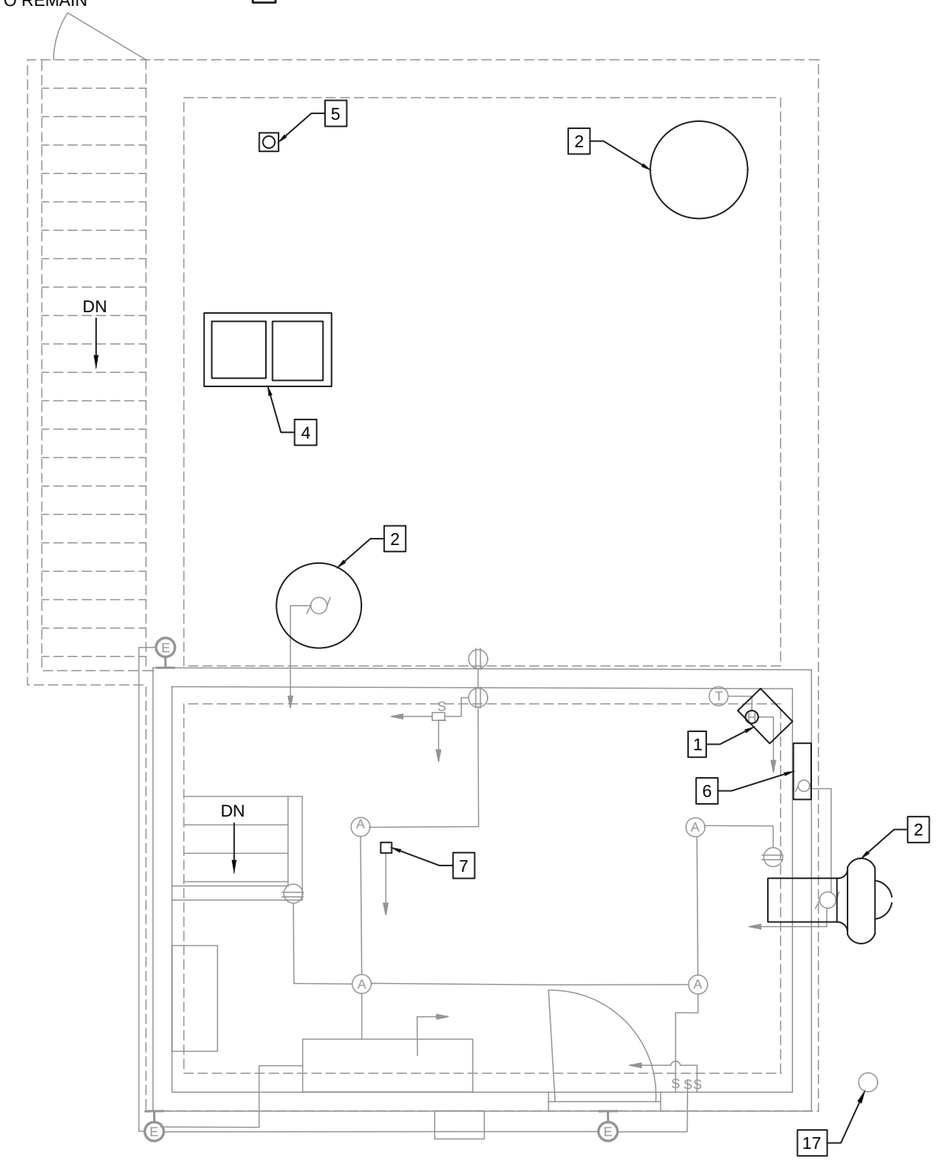

MECHANICAL PLAN - UPPER LEVEL
R-1
0 1 2 4 6
SCALE: 3/8" = 1'-0" (22X34)
SCALE: 3/16" = 1'-0" (11X17)

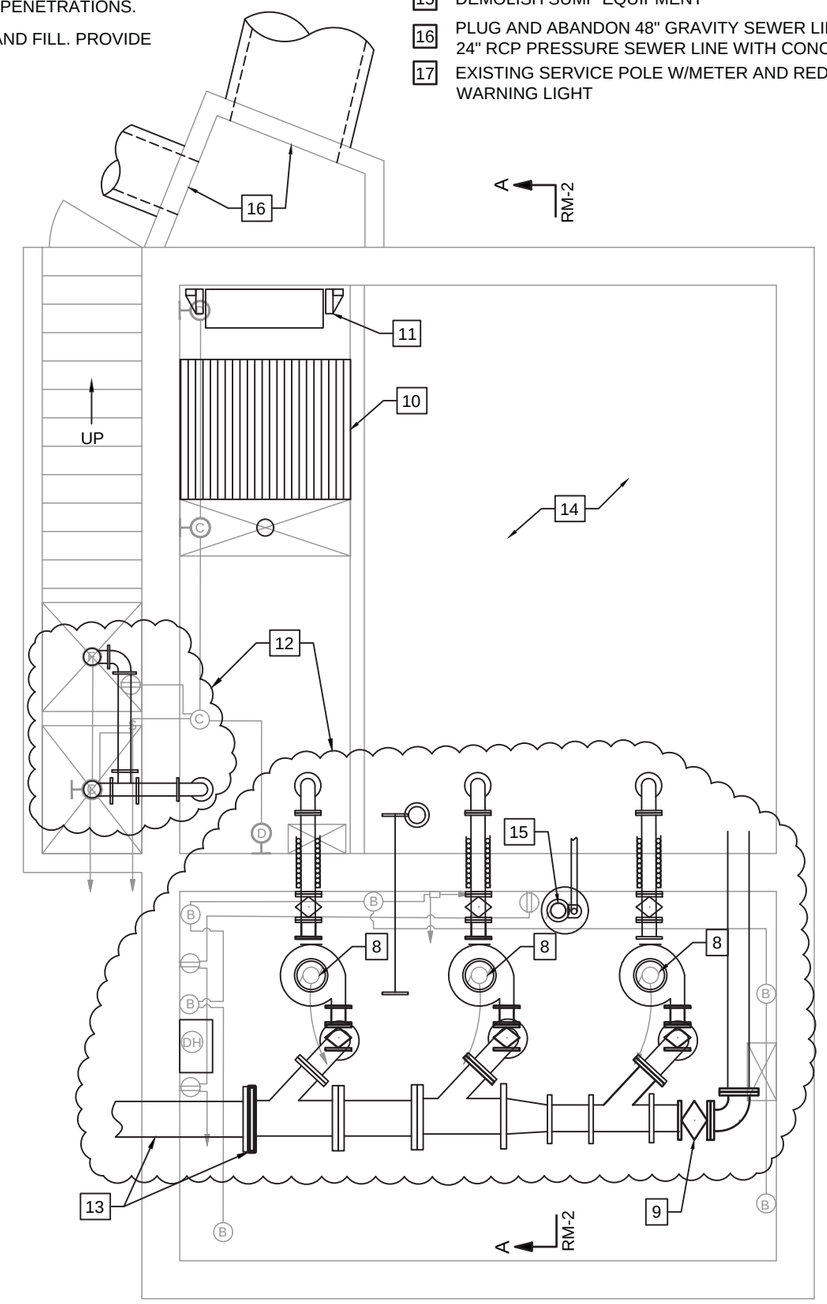

MECHANICAL PLAN - LOWER LEVEL
R-1
0 1 2 4 6
SCALE: 3/8" = 1'-0" (22X34)
SCALE: 3/16" = 1'-0" (11X17)

PROJECT NO.: 00616135	SCALE: AS SHOWN	NO.	DATE	REVISION	BY
PROJECT DATE: 1-10-2020	DRAWN BY: -	.	.	.	.
F.B. : .	CHECKED BY: SCR	.	.	.	.
.	.	.	.	.	.

PLOT DATE: 1/14/20, P:\610s\616\00616135\CADD\Construction Drawings\1-Removal-demo\00616135 RM-1 Mechanical Plan.dwg

I HEREBY CERTIFY THAT THIS PLAN, REPORT, OR SPECIFICATION WAS PREPARED BY ME OR UNDER MY DIRECT SUPERVISION AND THAT I AM A DULY LICENSED PROFESSIONAL ENGINEER UNDER THE LAWS OF THE STATE OF MINNESOTA.

1/10/2020 Date — 44287 License No.

SCOTT R CHILSON

MSA

ENGINEERING | ARCHITECTURE | SURVEYING
FUNDING | PLANNING | ENVIRONMENTAL
332 W Superior Street, Duluth MN 55802
(218) 722-3915 www.msa-ps.com

© MSA Professional Services, Inc.

LIFT STATION 15 RELOCATION
CITY OF DULUTH, MINNESOTA
2114 W MICHIGAN STREET

MECHANICAL DEMOLITION PLAN

FILE NO. 00616135
SHEET R-1

KEY NOTES - DEMOLITION

1. DEMOLISH EXISTING LVL CONTROL EQUIPMENT
2. EXISTING FAN TO REMAIN
3. NON-HAZARDOUS WHEN VENTILATED
4. EXISTING HATCH TO REMAIN
5. EXISTING FLOOR STAND TO REMAIN
6. DEMOLISH RWW PUMP, PIPING, AND APPURTENANCES
7. DEMOLISH PIPING, VALVE, AND FITTINGS
8. HAZARDOUS ENVIRONMENT
9. DEMOLISH EXISTING BAR SCREEN
10. DEMOLISH EXISTING GATE AND OPERATOR RODS AND MOUNTS
11. CLEAN WET WELL

BUILDING AND BELOW GRADE STRUCTURE TO BE DEMOLISHED BY OTHERS.

THIS CONTRACT SHALL PROVIDE SELECT DEMOLITION OF ALL NON-EMBEDDED / ATTACHED EQUIPMENT, MATERIALS, AND MISCELLANEOUS ITEMS THAT RELATE TO PROCESS MECHANICAL, PLUMBING, HVAC, AND ELECTRICAL.

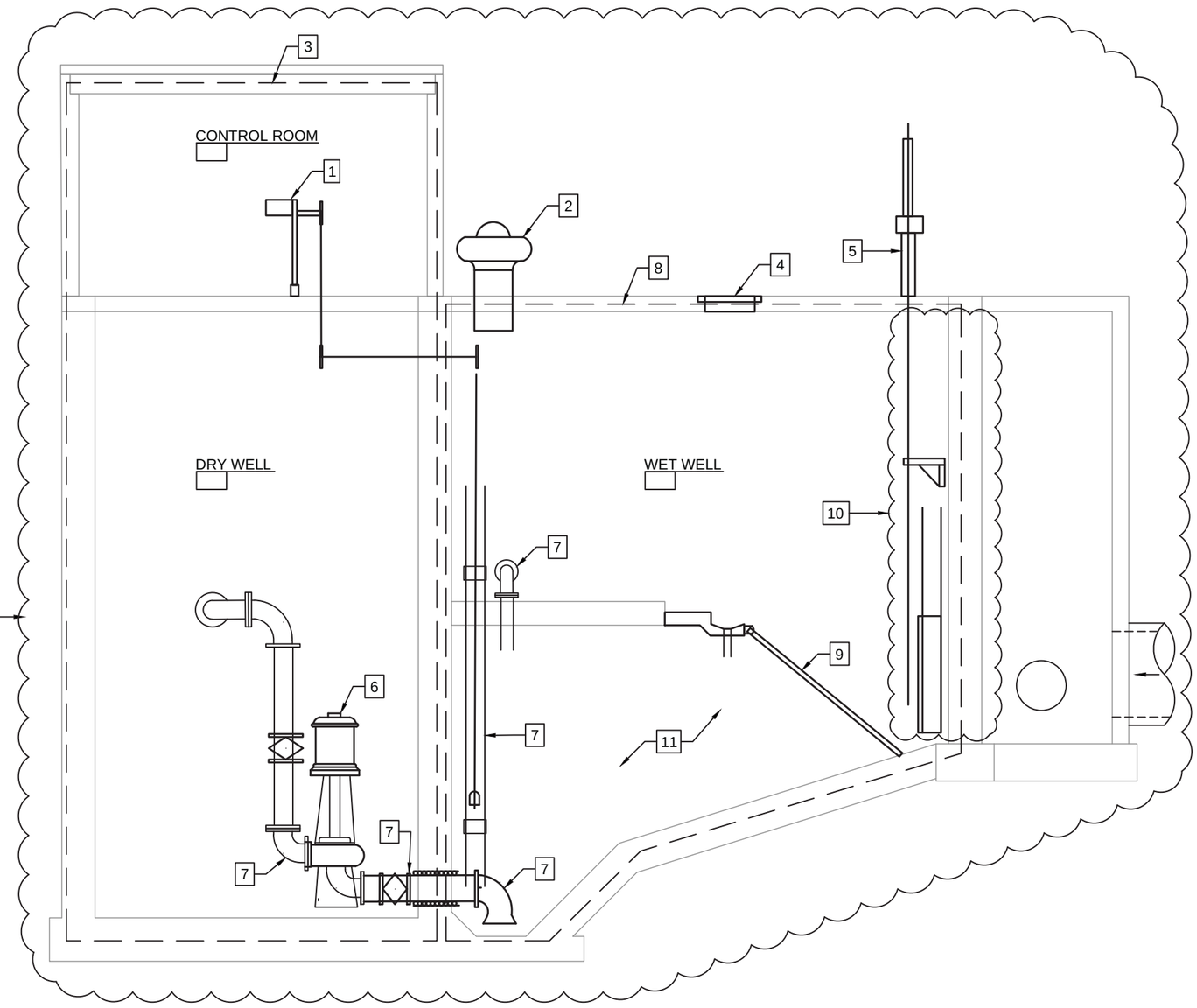

BUILDING SECTION A

R-2

0 1 2 4 6

SCALE: 3/8" = 1'-0" (22X34)
SCALE: 3/16" = 1'-0" (11X17)

PROJECT NO.: 00616135	SCALE: AS SHOWN	NO.	DATE	REVISION	BY
PROJECT DATE: 1-10-2020	DRAWN BY: -	.	.	.	.
F.B. : .	CHECKED BY: SCR	.	.	.	.
.	.	.	.	.	.

PLOT DATE: 1/14/20, P:\610s\616\00616135\CADD\Construction Drawings\1-Removal-demo\00616135 RM-2 Mechanical Plan.dwg

I HEREBY CERTIFY THAT THIS PLAN, REPORT, OR SPECIFICATION WAS PREPARED BY ME OR UNDER MY DIRECT SUPERVISION AND THAT I AM A DULY LICENSED PROFESSIONAL ENGINEER UNDER THE LAWS OF THE STATE OF MINNESOTA.

1/10/2020 Date

44287 License No.

SCOTT R CHILSON

MSA

ENGINEERING | ARCHITECTURE | SURVEYING
FUNDING | PLANNING | ENVIRONMENTAL
332 W Superior Street, Duluth MN 55802
(218) 722-3915 www.msa-ps.com

© MSA Professional Services, Inc.

LIFT STATION 15 RELOCATION
CITY OF DULUTH, MINNESOTA
2114 W MICHIGAN STREET

MECHANICAL
DEMOLITION PLAN

FILE NO. 00616135

SHEET R-2

DEMOLITION GENERAL NOTES

1. THE GENERAL CONTRACTOR SHALL COORDINATE AND PROVIDE ALL DEMOLITION AND REMOVAL OF DEBRIS NECESSARY TO ACCOMMODATE NEW CONSTRUCTION.
2. DEMOLITION PLAN IS PROVIDED AS AN AID IN PLANNING AND DOES NOT RELIEVE CONTRACTORS RESPONSIBILITY TO FIELD VERIFY THE EXISTING JOB SITE.
3. DEMOLITION PLAN SHALL BE USED IN CONJUNCTION WITH THE REMAINDER OF THE SHEETS IN THIS SET.
4. REMOVE EXISTING CONCRETE SLABS AS REQUIRED FOR PROCESS MECHANICAL, HVAC, AND ELECTRICAL WORK.
5. ALL AREAS, FINISHED, AND ITEMS NOT REQUIRING DEMOLITION MUST BE PROTECTED DURING DEMOLITION AND CONSTRUCTION WORK.
6. REFERENCE HVAC AND ELECTRICAL SHEETS FOR ADDITIONAL ITEMS TO BE REMOVED AND OR RELOCATED.
7. PRIOR TO START OF DEMOLITION WORK, VERIFY WITH THE OWNER ALL ITEMS TO BE TURNED OVER TO THE OWNER. ALL OTHER ITEMS TO BE REMOVED SHALL BE RESPONSIBILITY OF THE GC.

KEY NOTES - DEMOLITION

1. DEMOLISH CONTROL PANEL
2. DEMOLISH MCC
3. COORDINATE DISCONNECT OF ELECTRIC SERVICE WITH MINNESOTA POWER
4. DEMOLISH ALL ELECTRICAL EQUIPMENT, DEVICES, INSTRUMENTS, CONDUIT, SLEEVES, WIRE, CONDUCTORS, ETC.
5. CLASS1, DIVISION
6. UNCLASSIFIED WHEN VENTILATED

DEMOLITION PHASE ELECTRICAL FIXTURES

- (A) CONTROL BUILDING - CEILING FIXTURE
- (B) DRY WELL - WALL MOUNTED FIXTURE
- (C) WET WELL - WALL MOUNTED FIXTURE
- (D) WET WELL - WALL MOUNTED FIXTURE
- (E) EXTERIOR FLOODLIGHTS
- (F) WET WELL ENTRANCE - CEILING MOUNTED FIXTURE
- DUPLEX OUTLETS
- ELECTRICAL MOTOR
- $ P&S SWITCH
- (T) THERMOSTAT
- (H) HEATER - GAS FIRED
- (DH) DEHUMIDIFIER

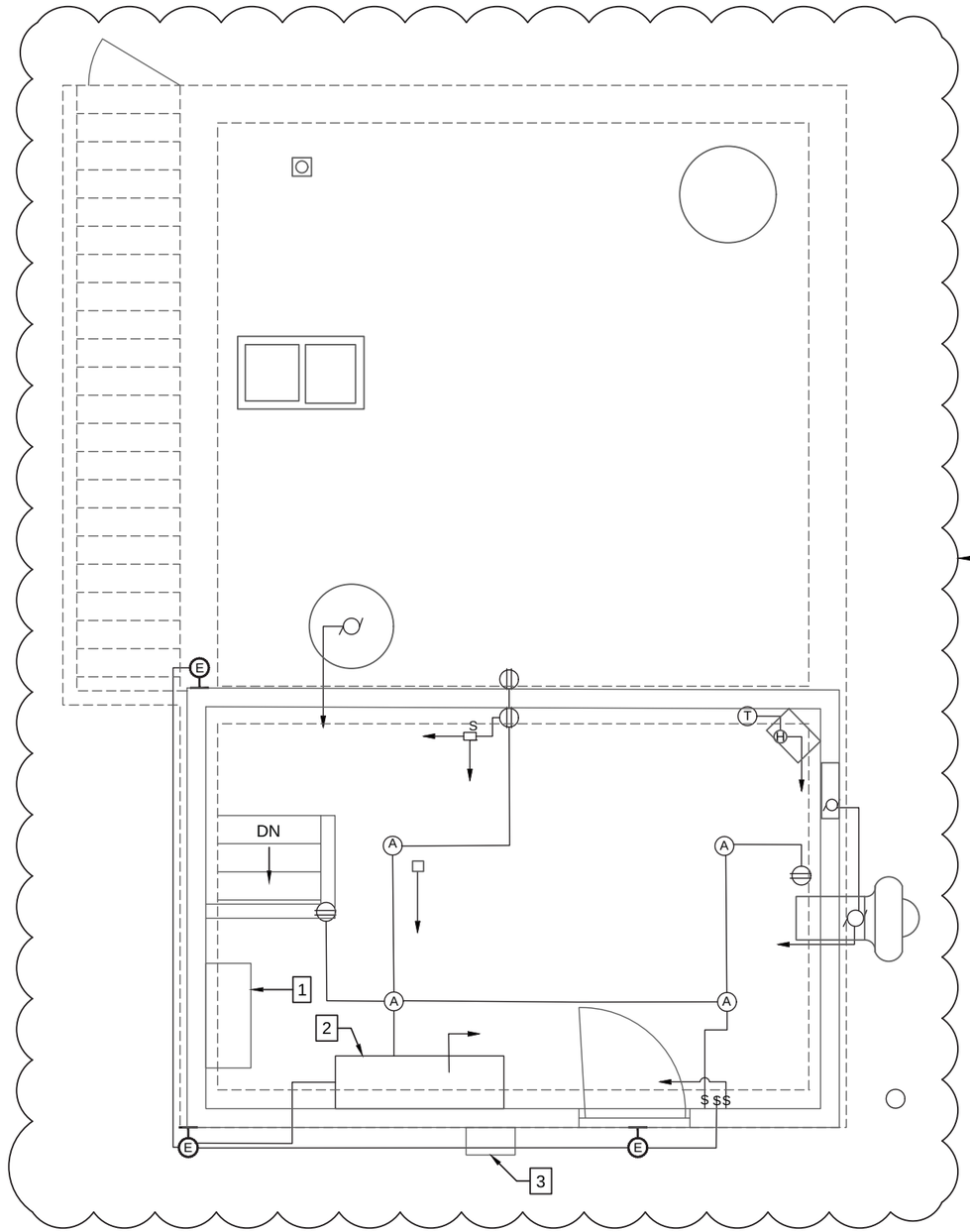

ELECTRICAL PLAN - UPPER LEVEL

0 1 2 4 6

SCALE: 3/8" = 1'-0" (22X34)
SCALE: 3/16" = 1'-0" (11X17)

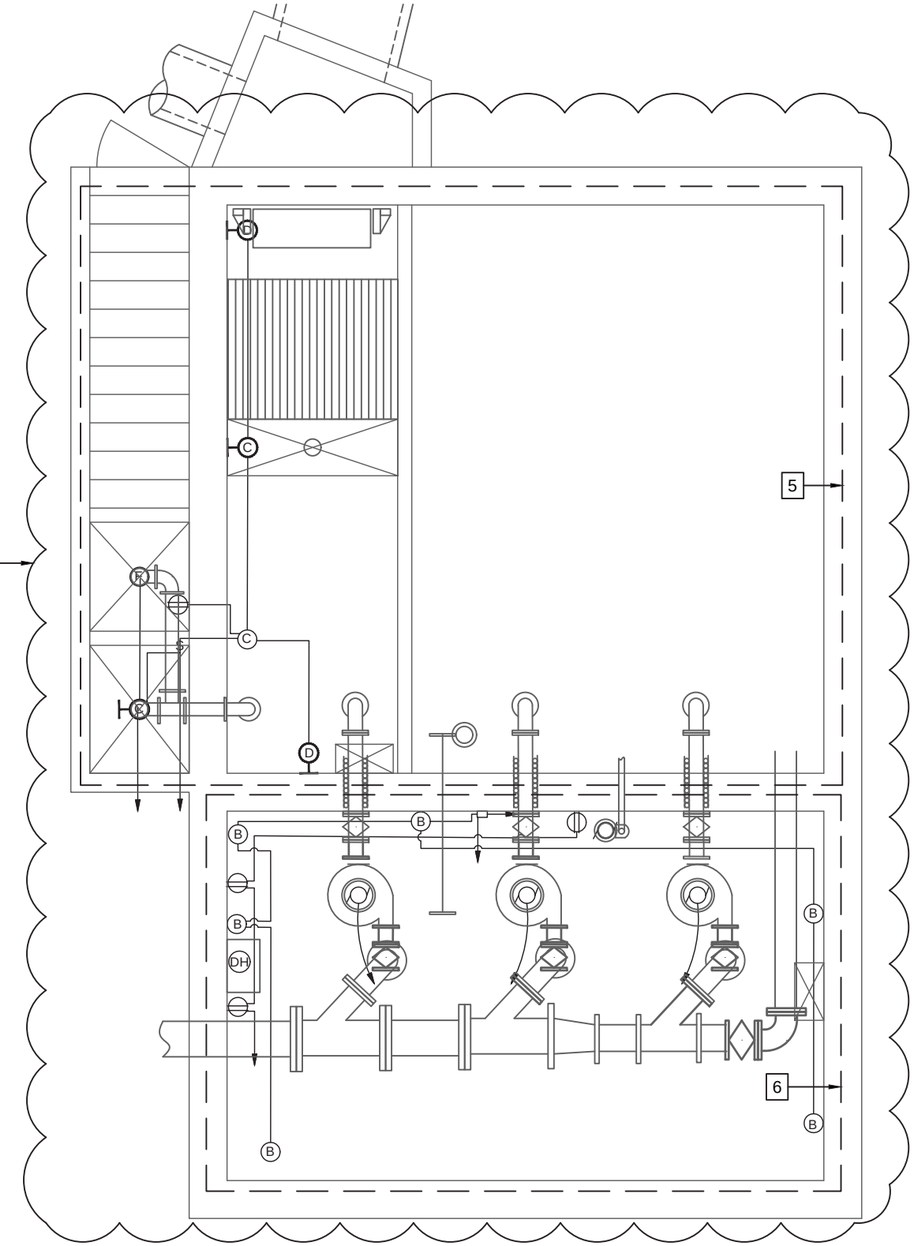

ELECTRICAL PLAN - LOWER LEVEL

0 1 2 4 6

SCALE: 3/8" = 1'-0" (22X34)
SCALE: 3/16" = 1'-0" (11X17)

PROJECT NO.:	00616135	SCALE: AS SHOWN	NO.	DATE	REVISION	BY
PROJECT DATE:	1-10-2020	DRAWN BY: -	.	.	.	.
F.B. :	.	CHECKED BY: SCR	.	.	.	.
.	.	.	.	.	.	.

PLOT DATE: 1/14/20, P:\610s\616\00616135\CADD\Construction Drawings\1-Removal-demo\00616135 RE-2 Electrical Plan - Upper level.dwg

I HEREBY CERTIFY THAT THIS PLAN, REPORT, OR SPECIFICATION WAS PREPARED BY ME OR UNDER MY DIRECT SUPERVISION AND THAT I AM A DULY LICENSED PROFESSIONAL ENGINEER UNDER THE LAWS OF THE STATE OF MINNESOTA.

1/10/2020 Date — 44287 License No.

SCOTT R CHILSON

MSA
ENGINEERING | ARCHITECTURE | SURVEYING
FUNDING | PLANNING | ENVIRONMENTAL
332 W Superior Street, Duluth MN 55802
(218) 722-3915 www.msa-ps.com

© MSA Professional Services, Inc.

LIFT STATION 15 RELOCATION
CITY OF DULUTH, MINNESOTA
2114 W MICHIGAN STREET

ELECTRICAL DEMOLITION PLAN

FILE NO. 00616135
SHEET R-3

BUILDING EXTERIOR

CAT WALK IN DRY WELL

DRYWELL PUMPS

EXHAUST DUCT IN DRYWELL

INTERIOR HEATER AND EXHAUST DUCTWORK

INTERIOR PIPING MANIFOLD

INTERIOR POWER AND CONTROL PANELS

INTERIOR STAIRWAY

POWER AND CONTROL PANELS

PUMPS AND WALL PENETRATIONS TO BE SEALED

PUMPS PIPE GALLERY AND CATWALK DRYWELL

PUMPS

PROJECT NO.:	00616135	SCALE: AS SHOWN	NO.	DATE	REVISION	BY
PROJECT DATE:	1-10-2020	DRAWN BY: -	.	.	.	.
F.B.:	.	CHECKED BY: SCR	.	.	.	.
.			.	.	.	.

PLOT DATE: 1/14/20, P:\610s\616\00616135\CADD\Construction Drawings\1-Removal-demo\00616135 RE-5 EXISTING FACILITY PHOTOS.dwg

I HEREBY CERTIFY THAT THIS PLAN, REPORT, OR SPECIFICATION WAS PREPARED BY ME OR UNDER MY DIRECT SUPERVISION AND THAT I AM A DULY LICENSED PROFESSIONAL ENGINEER UNDER THE LAWS OF THE STATE OF MINNESOTA.

1/10/2020 Date — 44287 License No.

SCOTT R CHILSON

MSA

ENGINEERING | ARCHITECTURE | SURVEYING
FUNDING | PLANNING | ENVIRONMENTAL
332 W Superior Street, Duluth MN 55802
(218) 722-3915 www.msa-ps.com

© MSA Professional Services, Inc.

LIFT STATION 15 RELOCATION
CITY OF DULUTH, MINNESOTA
2114 W MICHIGAN STREET

EXISTING FACILITY PHOTOS

FILE NO. 00616135

SHEET R-4

STAIRWELL

SUMP

NOT USED

NOT USED

NOT USED

NOT USED

NOT USED

NOT USED

NOT USED

NOT USED

NOT USED

NOT USED

NOT USED

PROJECT NO.: 00616135	SCALE: AS SHOWN	NO.	DATE	REVISION	BY
PROJECT DATE: 1-10-2020	DRAWN BY: -	.	.	.	.
F.B. : .	CHECKED BY: SCR	.	.	.	.
.	.	.	.	.	.

PLOT DATE: 1/14/20, P:\610s\616\00616135\CADD\Construction Drawings\1-Removal-demo\00616135 RE-5 EXISTING FACILITY PHOTOS.dwg

I HEREBY CERTIFY THAT THIS PLAN, REPORT, OR SPECIFICATION WAS PREPARED BY ME OR UNDER MY DIRECT SUPERVISION AND THAT I AM A DULY LICENSED PROFESSIONAL ENGINEER UNDER THE LAWS OF THE STATE OF MINNESOTA.

1/10/2020 Date

44287 License No.

SCOTT R CHILSON

MSA

ENGINEERING | ARCHITECTURE | SURVEYING
FUNDING | PLANNING | ENVIRONMENTAL
332 W Superior Street, Duluth MN 55802
(218) 722-3915 www.msa-ps.com

© MSA Professional Services, Inc.

LIFT STATION 15 RELOCATION
CITY OF DULUTH, MINNESOTA
2114 W MICHIGAN STREET

EXISTING FACILITY PHOTOS

FILE NO. 00616135

SHEET R-5

DESIGN LOADINGS

BUILDING CATEGORY	IV
LIVE LOADS	
FLOOR LIVE LOAD	250 psf
GRATING/PLATFORM LIVE LOAD	100 psf
ROOF LIVE LOAD	20 psf
SNOW LOAD	
GROUND SNOW LOAD, Pg	60 psf
FLAT-ROOF SNOW LOAD, Pf	55.44 psf
SLOPED-ROOF SNOW LOAD, Ps	55.44 psf
SNOW EXPOSURE FACTOR, Ce	1.00
SNOW LOAD FACTOR, I	1.20
THERMAL FACTOR, Ct	1.10
WIND LOAD	
BASIC WIND SPEED	120 mph
WIND IMPORTANCE FACTOR, Iw	1.00
WIND EXPOSURE	C
INTERNAL PRESSURE COEFFICIENT	+/- 0.18
MAIN WIND FORCE RESISTING SYSTEM	
WALL, HORIZONTAL PRESSURE	+/- 35 psf
VERTICAL PRESSURE	
WINDWARD HALF OF ROOF	-33 psf
WINDWARD OVERHANGS	-47 psf
LEEWARD HALF OF ROOF	-22 psf
ROOF, HORIZONTAL PRESSURE	+/- 12 psf
COMPONENTS AND CLADDING	
EXTERIOR WALLS, DOORS, WINDOWS AND LOUVERS	+/- 34 psf
ROOF UPLIFT	-50 psf
ROOF OVERHANG UPLIFT	-69 psf
SEISMIC DESIGN DATA	
SEISMIC IMPORTANCE FACTOR, Ie	1.5
MAPPED SPECTRAL RESPONSE ACCELERATIONS	
Ss	0.041
S1	0.016
SPECTURAL RESPONSE COEFFICIENTS	
Sds	0.044
Sd1	0.025
SEISMIC DESIGN CATAGORY	A
BASIC SEISMIC-FORCE-RESISTING SYSTEM	ORDINARY REINFORCED MASONRY SHEAR WALLS
SEISMIC RESPONSE COEFICIENT, Cs	0.01
RESPONSE MODIFICATION FACTOR	2
ADDITIONAL ROOF LOADS	
DEAD LOAD, TOTAL	20 psf
TOP CHORD	10 psf
BOTTOM CHORD	10 psf
LIVE LOAD (MINIMUM)	20 psf
TRUSS DEFLECTION, MAX	L/360

DESIGN STRESSES

CAST-IN-PLACE CONCRETE	SEE SPEC
STEEL	
REINFORCING	fy = 60 ksi
BOLTS	
ANCHOR	F1554, GRADE 36
EXPANSION	WEDGE TYPE
MASONRY	
CMU	f'm = 1900 ksi
SOIL BEARING PRESSURE CAPACITY	
PRESUMED	q = 1500 psf

STEEL REINFORCING

MIN CLEAR COVER, UNO	
FOUNDATION WALLS (FORMED)	
#5 BARS & SMALLER	1 1/2"
#6 BARS & LARGER	2"
NON-STRUCTURAL SLABS ON GRADE	
BOTTOM & SIDES	1 1/2"
TOP	3/4"
FOOTINGS AND STRUCTURAL SLABS ON GRADE	
BOTTOM & SIDES	3"
TOP	2"

NOTES

1. LAP BARS 36" AT SPLICES.

GENERAL FOUNDATION NOTES

A. SEE ARCHITECTURAL DRAWINGS FOR ADDITIONAL DIMENSIONS.

B. CONTRACTOR TO COORDINATE STRUCTURAL, ARCHITECTURAL, PLUMBING, PROCESS MECHANICAL, HVAC, AND ELECTRICAL PLANS FOR DETAILS, DIMENSIONS, ELEVATIONS, OPENINGS, ETC. NOTIFY ARCHITECT OF ANY VARIANCE BEFORE COMMENCING CONSTRUCTION.

C. IN NO CASE SHALL STRUCTURAL ALTERATIONS OR WORK AFFECTING A STRUCTURAL MEMBER BE MADE, UNLESS APPROVED BY ENGINEER.

D. SIMILAR PORTIONS OF THE BUILDING SHALL HAVE SIMILAR DETAILING, UNLESS NOTED OTHERWISE.

E. ALL WALL FORM TIES SHALL BE KNOCKED OFF FLUSH w/ THE FACE OF THE WALL AT INTERIOR AND EXTERIOR FACE OF WALLS. AT TIES BELOW THE FINISHED FLOOR AND/ OR FINISHED GRADE PROVIDE A LAYER OF DAMPPROOFING PRODUCT OVER THE REMOVED TIE AREA, TYPE.

F. BACKFILL AND COMPACT w/ ENGINEERED FILL ON BOTH SIDES OF FOUNDATION AT THE SAME TIME.

G. FOOTINGS SHALL BE CENTERED ABOUT THE WALLS, UNLESS NOTED OTHERWISE.

H. PROVIDE REINFORCEMENT IN FOUNDATION WALL AT WALL INTERSECTIONS - SEE DETAIL 10/S-6.

I. PROVIDE OPENING REINFORCING FOR ALL MISCELLANEOUS OPENINGS THROUGH FOOTING, FOUNDATION WALL OR FLOOR SLAB - SEE DETAIL 5/S-6.

J. SEE 'SLAB PLAN' ON SHEET S-2 FOR STOOP LOCATIONS.

GENERAL REINFORCING/CONCRETE NOTES

I. ALL LAPS SHALL BE CLASS-'B' PER ACI 350-06 AND ACI 318, UNLESS NOTED OTHERWISE ON THE DESIGN DRAWINGS, AND THE DETAILER TAKES SPECIAL CARE TO PROVIDE STAGGERED LAPS. USE TOP BAR LAP LENGTHS FOR ALL HORIZONTAL ALL BARS AND FOR BARS IN SLABS WITH MORE THAN 12" OF CONCRETE BELOW. SEE DETAIL 9/S-6 FOR REINFORCING SPLICE.

II. LAP LENGTH SHALL BE SPECIFICALLY NOTED ON PLACING DRAWINGS WHERE MORE THAN ONE BAR MAKES UP A CONTINUOUS STRING.

III. BAR PLACEMENT TOLERANCES SHALL BE AS SPECIFIED IN THE CONCRETE REINFORCING STEEL INSTITUTE (CRSI) MANUAL OF STANDARD PRACTICE, CURRENT EDITION.

IV. ALL REINFORCING BAR DIMENSIONS ARE FROM OUT-TO-OUT OF BAR. ALL BEND ANGLES ARE AT 45° AND 90°, UNLESS NOTED OTHERWISE.

V. SEE SPECIFICATION FOR CONCRETE CLASS AND FINISH SCHEDULES, UNO.

VI. SEE GENERAL FOUNDATION NOTES FOR ADDITIONAL REINFORCING REQUIREMENTS.

VII. ALL WATER-RETAINING STRUCTURE WALLS TO CONTAIN WATERSTOPS AT THE BOTTOM OF THE WALL AND AT ALL VERTICAL CONSTRUCTION JOINTS. SEE DETAIL 1/S-7 FOR TYPICAL JOINT DETAIL AND DETAIL 2/S-7 FOR RETROFIT DETAIL.

KEY NOTES

1. WALL INTERSECTION REINFORCING IN FOUNDATION WALL, TYP - SEE GENERAL FOUNDATION NOTES.
2. HORIZONTAL DOWEL AT CONNECTION BETWEEN UNDERGROUND TANK FOUNDATION WALL AND BUILDING FOUNDATION WALL - SEE DETAIL 11/S-6.
3. 19" THICK REINFORCED CONCRETE MAT SLAB FOUNDATION OVER MIN 10" COMPACTED GRAVEL FILL AND COMPACTED GRANULAR FILL.
4. HP12x57 PILE, TYP
5. FOUNDATION WALL CONTROL JOINT, TYP. JOINT TO ALIGN WITH CMU WALL CONTROL JOINT - SEE DETAIL 3/S-6.
6. CONCRETE SUMP PIT - SEE MECHANICAL DRAWINGS FOR SUMP
7. CORNER REINFORCING IN WETWELL WALLS SHALL BE #7@6" - SEE DETAIL 10/S-6 (TYP.)
8. FOR TYPICAL BASEMENT WALL REINFORCING SEE SECTION 1/S-4.
9. FLOOR DRAIN LOCATION - SEE PLUMBING. SLOPE FLOOR IN AREA SHOWN TOWARDS DRAIN. TOP OF GRATE AT 1" BELOW TOP OF SLAB AT PERIMETER, EL = 607.42'.

FOUNDATION LEGEND

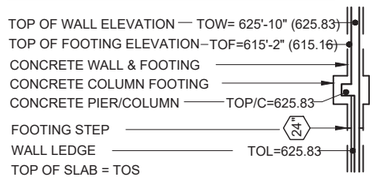

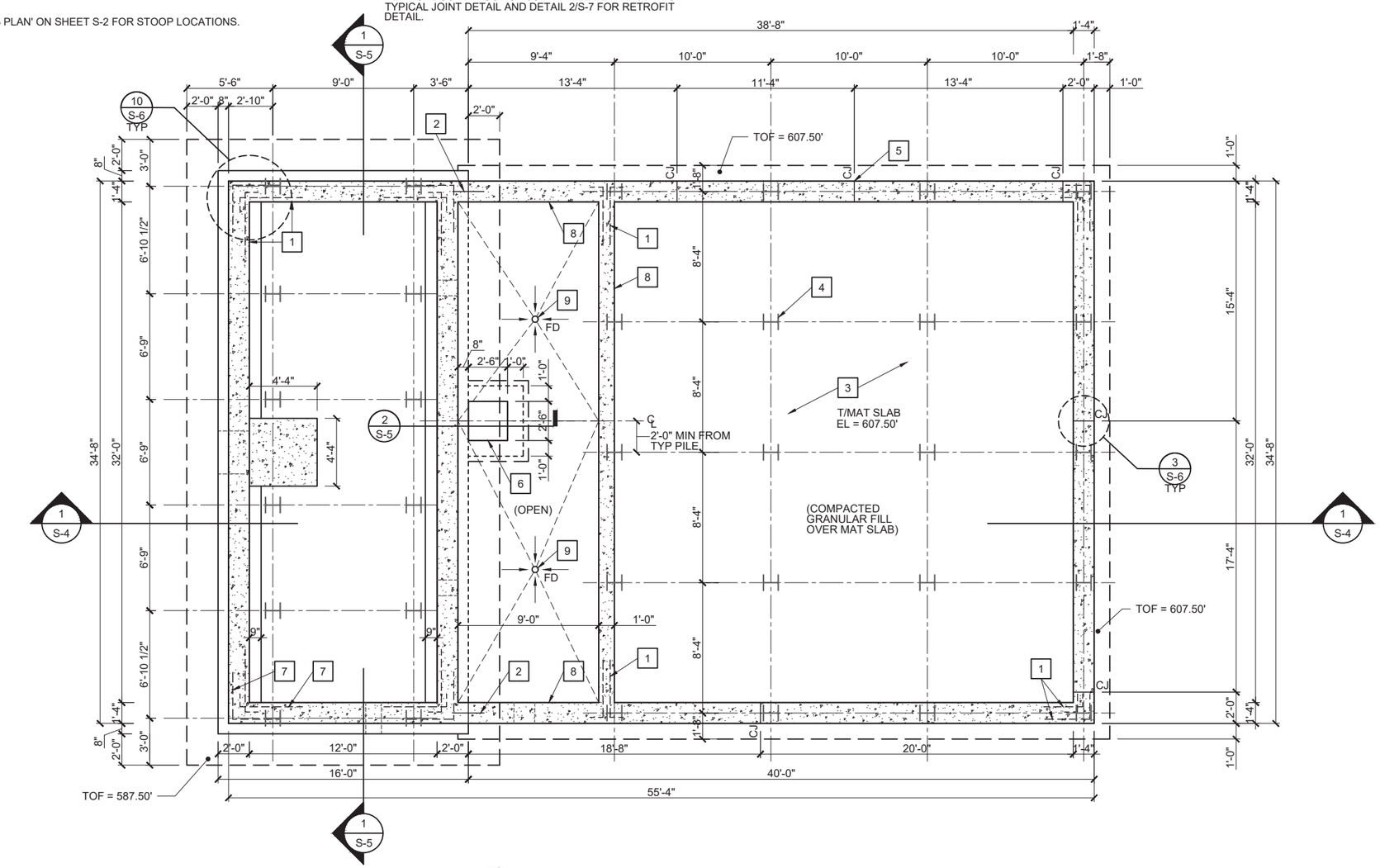

FOUNDATION PLAN

0 2 4 8

1/4" = 1'-0" (22x34)
1/8" = 1'-0" (11x17)

PROJECT NO.: 00616135	SCALE: AS SHOWN	NO.	DATE	REVISION	BY
PROJECT DATE: 1-10-2020	DRAWN BY: -	.	.	.	.
F.B. : .	CHECKED BY: SCR	.	.	.	.
.	.	.	.	.	.

PLOT DATE: 1/14/20, P:\610s\616\00616135\CADD\Construction Drawings\3-Structural\S1.0 Foundation Plan.dwg

I HEREBY CERTIFY THAT THIS PLAN, REPORT, OR SPECIFICATION WAS PREPARED BY ME OR UNDER MY DIRECT SUPERVISION AND THAT I AM A DULY LICENSED ARCHITECT AND PROFESSIONAL ENGINEER UNDER THE LAWS OF THE STATE OF MINNESOTA.

1/10/2020 — Date

53032 — License No.

KEITH M. SCHINKOETH

MSA

ENGINEERING | ARCHITECTURE | SURVEYING
FUNDING | PLANNING | ENVIRONMENTAL
332 W Superior Street, Duluth MN 55802
(218) 722-3915 www.msa-ps.com

© MSA Professional Services, Inc.

LIFT STATION 15 RELOCATION
CITY OF DULUTH, MINNESOTA
2114 W MICHIGAN STREET

FOUNDATION PLAN

FILE NO. 00616135

SHEET S-1

GENERAL FOUNDATION NOTES

A. SEE ARCHITECTURAL DRAWINGS FOR ADDITIONAL DIMENSIONS.

B. CONTRACTOR TO COORDINATE STRUCTURAL, ARCHITECTURAL, PLUMBING, PROCESS MECHANICAL, HVAC, AND ELECTRICAL PLANS FOR DETAILS, DIMENSIONS, ELEVATIONS, OPENINGS, ETC. NOTIFY ARCHITECT OF ANY VARIANCE BEFORE COMMENCING CONSTRUCTION.

C. IN NO CASE SHALL STRUCTURAL ALTERATIONS OR WORK AFFECTING A STRUCTURAL MEMBER BE MADE, UNLESS APPROVED BY ENGINEER.

D. SIMILAR PORTIONS OF THE BUILDING SHALL HAVE SIMILAR DETAILING, UNLESS NOTED OTHERWISE.

E. ALL WALL FORM TIES SHALL BE KNOCKED OFF FLUSH w/ THE FACE OF THE WALL AT INTERIOR AND EXTERIOR FACE OF WALLS. AT TIES BELOW THE FINISHED FLOOR AND/ OR FINISHED GRADE PROVIDE A LAYER OF DAMPPROOFING PRODUCT OVER THE REMOVED TIE AREA, TYPE.

F. BACKFILL AND COMPACT w/ ENGINEERED FILL ON BOTH SIDES OF FOUNDATION AT THE SAME TIME.

G. FOOTINGS SHALL BE CENTERED ABOUT THE WALLS, UNLESS NOTED OTHERWISE.

H. PROVIDE CORNER BARS IN FOUNDATION WALL AT CORNERS. BARS SHALL BE SAME SIZE AND LOCATION OF THE HORIZONTAL REINFORCING - SEE DETAIL 10/S-6.

I. PROVIDE OPENING REINFORCING FOR ALL MISCELLANEOUS OPENINGS THROUGH FOOTING, FOUNDATION WALL OR FLOOR SLAB - SEE DETAIL 5/S-6.

J. SEE 'SLAB PLAN' ON SHEET S-2 FOR STOOP LOCATIONS.

K. PORTABLE RAILING TYPES BY OWNER ARE LISTED ON PLAN AT MOUNTING POST/SOCKET LOCATIONS.

GENERAL REINFORCING/CONCRETE NOTES

I. ALL LAPS SHALL BE CLASS-'B' PER ACI 350-06 AND ACI 318, UNLESS NOTED OTHERWISE ON THE DESIGN DRAWINGS, AND THE DETAILER TAKES SPECIAL CARE TO PROVIDE STAGGERED LAPS. USE TOP BAR LAP LENGTHS FOR ALL HORIZONTAL ALL BARS AND FOR BARS IN SLABS WITH MORE THAN 12" OF CONCRETE BELOW. SEE DETAIL 9/S-6 FOR REINFORCING SPLICE.

II. LAP LENGTH SHALL BE SPECIFICALLY NOTED ON PLACING DRAWINGS WHERE MORE THAN ONE BAR MAKES UP A CONTINUOUS STRING.

III. BAR PLACEMENT TOLERANCES SHALL BE AS SPECIFIED IN THE CONCRETE REINFORCING STEEL INSTITUTE (CRSI) MANUAL OF STANDARD PRACTICE, CURRENT EDITION.

IV. ALL REINFORCING BAR DIMENSIONS ARE FROM OUT-TO-OUT OF BAR. ALL BEND ANGLES ARE AT 45° AND 90°, UNLESS NOTED OTHERWISE.

V. SEE SPECIFICATION FOR CONCRETE CLASS AND FINISH SCHEDULES, UNO.

VI. SEE GENERAL FOUNDATION NOTES FOR ADDITIONAL REINFORCING REQUIREMENTS.

VII. ALL WATER-RETAINING STRUCTURE WALLS TO CONTAIN WATERSTOPS AT THE BOTTOM OF THE WALL AND AT ALL VERTICAL CONSTRUCTION JOINTS. SEE DETAIL 1/S-7 FOR TYPICAL JOINT DETAIL AND DETAIL 6/99-S3 FOR RETROFIT DETAIL.

KEY NOTES

1. EXTERIOR SLAB-FOUNDATION WALL PERIMETER JOINT, TYP: 1/2" RIGID INSULATION (FULL DEPTH OF SLAB) w/ REMOVABLE CAP AND SELF-LEVELING SEALANT.
2. SLAB CONTROL/CONSTRUCTION JOINT (CJ) LOCATION, TYP - SEE DETAIL 2/S-6.
3. 6" THICK CONCRETE SLAB (SEVERE EXPOSURE) w/ 6x6-W2.9xW2.9 WWM ON REINFORCED VAPOR BARRIER OVER MIN 10" COMPACTED GRAVEL FILL AND COMPACTED GRANULAR FILL.
4. EMERGENCY GENERATOR PAD. 18" THICK MIN REINFORCED CONCRETE OVER COMPACTED GRAVEL FILL. PAD TO BE MINIMUM 3" LONGER AND WIDER THAN UNIT - VERIFY SIZE w/ MANUFACTURER. TOP OF PAD AT ELEVATION SHOWN ON SITE PLAN. SEE DETAIL 2/E-17
5. (1) #5 x 18" LONG BAR IN CENTER OF SLAB AT CORNER OF DOOR, TYP - SEE DETAIL 5/S-6 (SIM) - DO NOT INSTALL ACROSS CONTROL JOINT.
6. MASONRY DOWEL IN TOP OF FOUNDATION WALL, TYP - SEE DETAIL 4/S-6.
7. FOUNDATION WALL CONTROL JOINT, TYP. JOINT TO ALIGN WITH CMU WALL CONTROL JOINT - SEE DETAIL 3/S-6.
8. HOLD FOUNDATION WALL DOWN 8" AT DOORS AND OVERHEAD DOOR, TYP
9. DOWEL STOOP FOUNDATION TO BUILDING FOUNDATION WALL - SEE DETAIL 12/S-6.
10. HORIZONTAL DOWEL AT CONNECTION BETWEEN UNDERGROUND TANK FOUNDATION WALL AND BUILDING FOUNDATION WALL - SEE DETAIL 11/S-6
11. 2" RIGID INSULATION BY 4'-0" DEEP AT INSIDE FACE OF FOUNDATION WALL
12. THICKENED SLAB EDGE OVER WALL w/ TYPE-1 GRATING SUPPORT
13. 2" THICK ALUMINUM GRATING. SPAN DIRECTION INDICATED.
14. GRATING FRAMING AT PERIMETER OF OPENING IN GRATING FOR PROCESS MECHANICAL PIPING - COORDINATE SIZE AND LOCATION. FRAMING NEEDS TO MAINTAIN 1" CLEARANCE FROM OUTSIDE OF MECHANICAL PIPE FLANGE.
15. GRATING FRAMING AT PERIMETER OF OPENING IN GRATING FOR HVAC - COORDINATE SIZE AND LOCATION
16. SUPPORT BEAM FOR PROCESS PIPE STAND, MOUNT PIPE STAND TO TOP OF BEAM. CUT GRATING AROUND SUPPORT - SEE PROCESS MECHANICAL
17. BANDED SECTION OF GRATING, HINGE AT NORTH END. PROVIDE HANDLE AND SAFETY LATCH TO SECURE GRATE IN OPEN POSITION
18. ALUMINUM WALL MOUNTED LADDER - SEE DETAIL 7/S-7
19. GUARDRAIL MOUNTING POST AT CONCRETE, TYP - SEE DETAIL 8/S-5
20. GUARDRAIL MOUNTING POST TO BEAM, TYP - SEE DETAIL 10/S-7
21. SOCKET FOR FALL PROTECTION RAILING, TYP - SEE DETAIL 9/S-7. LOCATIONS NOT DIMENSIONED SHALL BE THE SAME ON THE OPPOSITE SIDE OF HATCH
22. PERMANENT ALUMINUM-FRAMED PLATFORM w/ 1/4" ALUMINUM RAISED PATTERN PLATE SCREWED TO FRAMING. CLIP ANGLE OR WELD TUBE SUPPORT BEAMS TO PERIMETER FRAMING. PROVIDE CONTINUOUS TUBE BEAM WELDED TO TOP OF PERIMETER SUPPORT FRAMING AT ENDS PARALLEL TO SPAN
23. STANCHION BASE FOR DAVIT CRANE - SEE DETAIL 3/S-5
24. BEAM-TO-BEAM CONNECTION, TYP - SEE DETAIL 6/S-7
25. FLOOR DRAIN LOCATION - SEE PLUMBING. SLOPE FLOOR IN AREA SHOWN TOWARDS DRAIN. TOP OF GRATE AT 1 3/4" BELOW TOP OF SLAB AT PERIMETER, EL = 615.35'.

FOUNDATION LEGEND

TOP OF WALL ELEVATION — TOW = 615.50'
TOP OF FOOTING ELEVATION — TOF = 611.50'
CONCRETE WALL & FOOTING
CONCRETE COLUMN FOOTING
CONCRETE PIER/COLUMN — TOP/C=615.50'
FOOTING STEP — 24"
TOP OF SLAB = TOS

BEAM SCHEDULE

B1	I8x6.18 ALUMINUM BEAM
B2	L4x4x1/4 ALUMINUM BEAM
B3	RT 1.75x1.75x0.125 ALUMINUM TUBE OVER I8x6.18 ALUMINUM BEAM
T1	TYPE-1 GRATING SUPPORT - SEE DETAIL 3/S-7
T2	TYPE-2 GRATING SUPPORT - SEE DETAIL 3/S-7

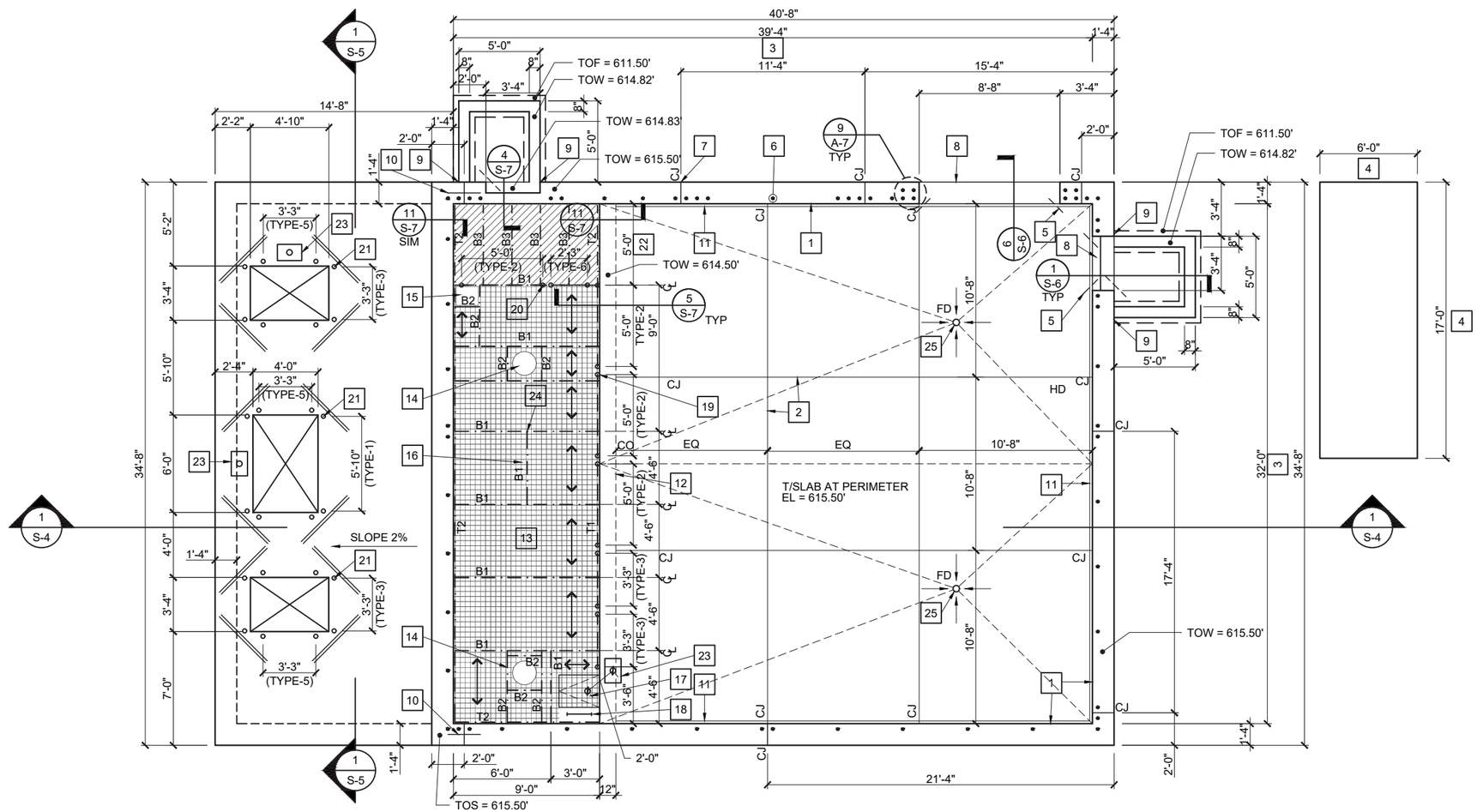

SLAB PLAN

0 2 4 8

1/4" = 1'-0" (22x34)
1/8" = 1'-0" (11x17)

PROJECT NO.: 00616135	SCALE: AS SHOWN	NO.	DATE	REVISION	BY
PROJECT DATE: 1-10-2020	DRAWN BY: -	.	.	.	.
F.B.: .	CHECKED BY: SCR	.	.	.	.
.		.	.	.	.

PLOT DATE: 1/14/20, P:\610s\616\00616135\CADD\Construction Drawings\3-Structural\S2.0 Structural Floor Plan.dwg

I HEREBY CERTIFY THAT THIS PLAN, REPORT, OR SPECIFICATION WAS PREPARED BY ME OR UNDER MY DIRECT SUPERVISION AND THAT I AM A DULY LICENSED ARCHITECT AND PROFESSIONAL ENGINEER UNDER THE LAWS OF THE STATE OF MINNESOTA.

1/10/2020 Date — 53032 License No.

KEITH M. SCHINKOETH

MSA
ENGINEERING | ARCHITECTURE | SURVEYING
FUNDING | PLANNING | ENVIRONMENTAL
332 W Superior Street, Duluth MN 55802
(218) 722-3915 www.msa-ps.com

© MSA Professional Services, Inc.

LIFT STATION 15 RELOCATION
CITY OF DULUTH, MINNESOTA
2114 W MICHIGAN STREET

STRUCTURAL FLOOR PLAN

FILE NO. 00616135
SHEET S-2

LINTEL SCHEDULE

MARK	SYMBOL	DESCRIPTION
L-1	FULL COURSE HALF COURSE 2 1/2" MAX 2 1/2" MAX	28" DEEP CMU LINTEL w/ (2) #5 BARS CONT IN TOP AND BOTTOM COURSE, SOLID GROUTED, #3 VERTICAL BAR AT 16" OC, AND BACK-TO-BACK CONT L5x3-1/2x5/16 (EXTERIOR FACE) AND L4x4x5/16 (INTERIOR FACE). MATCH TYPICAL WALL COURSING.
L-2	2 1/2" MAX 2 1/2" MAX	16" DEEP CMU LINTEL w/ (2) #5 BARS CONT IN EACH COURSE, SOLID GROUTED, AND BACK-TO-BACK CONT L5x3-1/2x5/16 (EXTERIOR FACE) AND L4x4x5/16 (INTERIOR FACE).
L-3	2 1/2" MAX	8" DEEP CMU LINTEL w/ (2) #5 BARS CONT IN EACH COURSE, SOLID GROUTED, AND BACK-TO-BACK CONT L5x3-1/2x5/16 (EXTERIOR FACE) AND L4x4x5/16 (INTERIOR FACE).

NOTES:
1. MASONRY LINTELS ARE 8" (NOMINAL) WIDE, TYP.
2. PROVIDE 8" MIN BEARING . GROUT SOLID LINTEL BEARING AREA FROM FOUNDATION WALL TO UNDERSIDE OF LINTEL.
3. CENTER LINTELS WHERE SHOWN IN BEARING WALL.
4. PROVIDE LINTELS FOR ALL WALL OPENINGS MORE THAN 8" WIDE.
   a. MISC OPENINGS IN EXTERIOR WALL: LESS THAN 42" WIDE: L-3
5. ALL STEEL LINTELS SHALL BE HOT-DIP GALVANIZED AFTER FABRICATION.

HEADER SCHEDULE

MARK	SYMBOL	DESCRIPTION
H-1		(2) 2x6's NAILED TOGETHER.

NOTES:
1. ALL HEADERS AT OPENING SHALL HAVE A MINIMUM OF 1 1/2" BEARING AT EACH END UNLESS NOTED OTHERWISE.
2. HEADER MATERIAL: SEE DETAIL STRESSES ON SHEET S-1
3. ALL BUILT-UP HEADERS SHALL INCLUDE (1) TOP AND (1) BOTTOM 2x (STUD WIDTH) PLATE AS PAST OF THE HEADER AND TO RUN FULL LENGTH OF HEADER.
4. INSTALL TWO FULL HEIGHT STUDS. ONE SHOULDER STUD AT EACH END OF HEADERS.
5. FOR OPENINGS NOT SHOWN ON FRAMING PLAN USE H-1 HEADER.

KEY NOTES

1. 2x8 LOOKOUTS AT 24" OC, TYP. BACK-SPAN FASTENED TO WOOD STUD END WALL WITH H10A TIE AND LUS28 HANGER AT FIRST FULL-DEPTH TRUSS. SEE SECTION 1/A-5
2. 2x8 FIELD FRAMING AT ROOF AND SOFFIT, TYP.
3. DROPPED TOP CHORD TRUSS
4. DOOR AND WINDOW OPENING REINFORCING, TYP: CENTER AND GROUT SOLID (1) #5 BAR IN CMU CORE FROM TOP OF FOUNDATION TO UNDERSIDE OF LINTEL IN CORE ADJACENT TO OPENING AND FULL HEIGHT IN NEXT ADJACENT CORE.
5. CONT FASCIA BOARD, TYP.
6. CORNER REINFORCING, TYP: (1) #5 BAR IN CENTER OF CORE FULL HEIGHT.
7. CONTROL JOINT REINFORCING, TYP: CENTER AND GROUT SOLID (1) #5 BAR FULL HEIGHT IN CORE ADJACENT TO CONTROL JOINT.
8. VERTICAL WALL REINFORCING TYP: CENTER AND GROUT SOLID (1) #5 BAR IN CMU CORE FULL HEIGHT AT 4'-0" OC MAX SPACING.
9. VERTICAL WALL REINFORCING ABOVE OPENING, TYP: CENTER AND GROUT SOLID (1) #5 BAR IN CMU FROM TOP OF LINTEL TO TOP OF WALL.
10. HEADER/LINTEL FOR LOUVER, SEE ARCH AND MECHANICAL DRAWINGS
11. 1.75"x7.25" LVL STRUCTURAL FASCIA. FASTEN NORTH AND SOUTH FASCIA MEMBERS TO EAST AND WEST FASCIA MEMBERS WITH LUS28 HANGER. FASTEN 2X8 LOOKOUTS TO EAST AND WEST FASCIA WITH LUS28 HANGER. FASTEN BUILT-UP (3)-1.75"x7.25" LVL LOOKOUTS TO EAST AND WEST FASCIA WITH HU68 HANGER. FASTEN (1)-1.75"x7.25" LVL LOOKOUTS TO EAST AND WEST FASCIA WITH HU7 HANGER.
12. BUILT-UP (3)-1.75"x7.25" LVL LOOKOUTS AT 24" OC, BACK-SPAN FASTENED TO ROOF END TRUSS WITH DROPPED TOP CHORD WITH (1) H10A TIE AND HU68 HANGER AT FIRST FULL-DEPTH TRUSS, SEE DETAIL 1/A5.0.
13. (1)-1.75"x7.25" LVL LOOKOUTS AT 24" OC, BACK-SPAN FASTENED TO ROOF END TRUSS WITH DROPPED TOP CHORD WITH (1) H10A TIE AND HU7 HANGER AT FIRST FULL-DEPTH TRUSS, SEE DETAIL 1/A5.0.
14. FASCIA REACTION ON TRUSS OVERHANG: D = 0.25k, Lr = 0.23k, S = 0.62k, W = -0.53k (ULT.) (UPLIFT)
15. 2x4 END WALL BRACING AT 48" OC, TYP - SEE SECTION 1/A-4

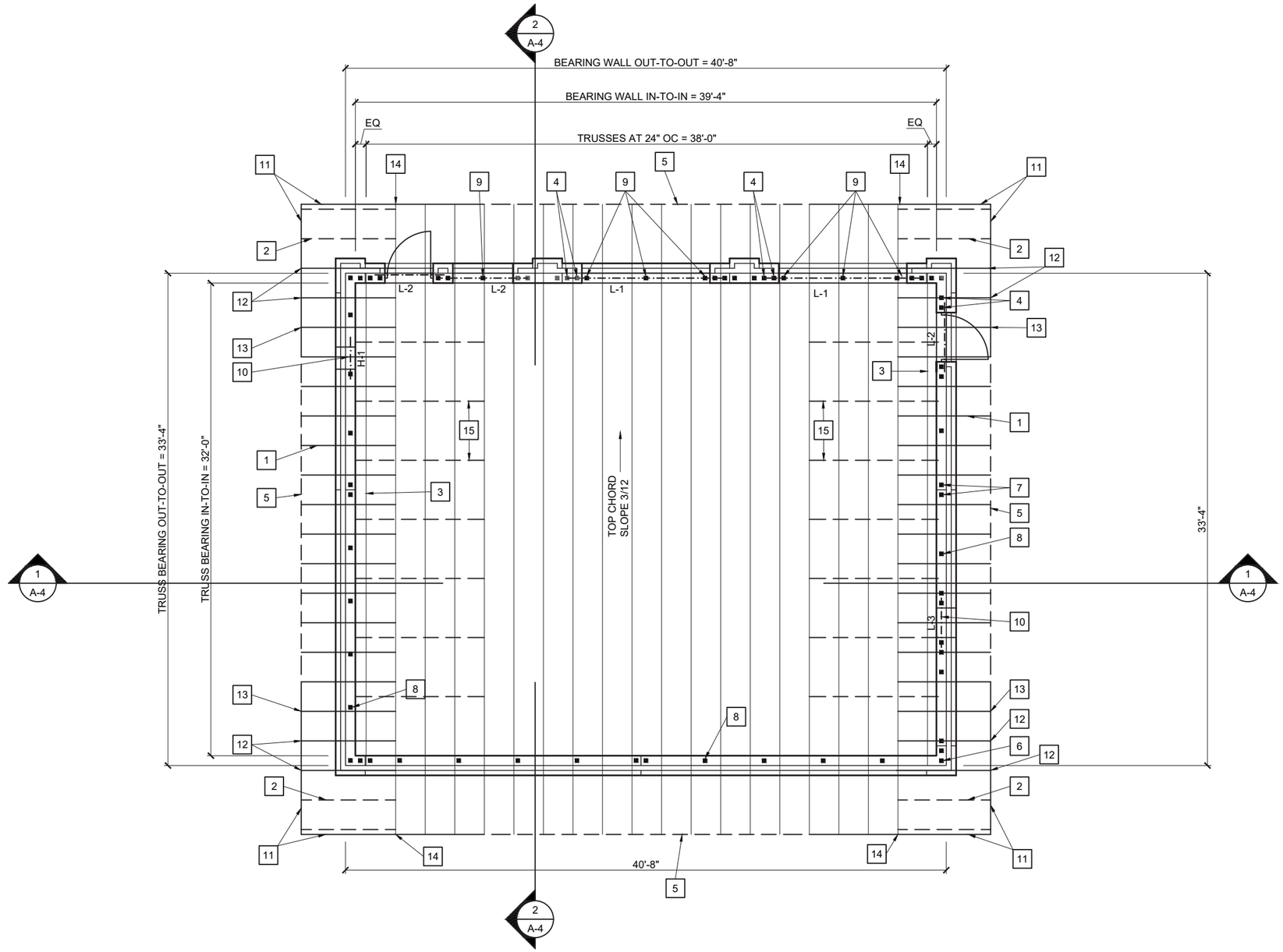

PLAN NORTH

ROOF FRAMING PLAN

0 2 4 8
1/4" = 1'-0" (22x34)
1/8" = 1'-0" (11x17)

PROJECT NO.: 00616135	SCALE: AS SHOWN	NO.	DATE	REVISION	BY
PROJECT DATE: 1-10-2020	DRAWN BY: MLB	.	.	.	.
F.B. : .	CHECKED BY: SCR	.	.	.	.
.		.	.	.	.

PLOT DATE: 1/14/20, P:\610s\616\00616135\CADD\Construction Drawings\3-Structural\S3.0 Roof Framing Plan.dwg

I HEREBY CERTIFY THAT THIS PLAN, REPORT, OR SPECIFICATION WAS PREPARED BY ME OR UNDER MY DIRECT SUPERVISION AND THAT I AM A DULY LICENSED ARCHITECT AND PROFESSIONAL ENGINEER UNDER THE LAWS OF THE STATE OF MINNESOTA.

1/10/2020 Date — 53032 License No.

KEITH M. SCHINKOETH

MSA
ENGINEERING | ARCHITECTURE | SURVEYING
FUNDING | PLANNING | ENVIRONMENTAL
332 W Superior Street, Duluth MN 55802
(218) 722-3915 www.msa-ps.com

© MSA Professional Services, Inc.

LIFT STATION 15 RELOCATION
CITY OF DULUTH, MINNESOTA
2114 W MICHIGAN STREET

ROOF FRAMING PLAN

FILE NO. 00616135
SHEET S-3

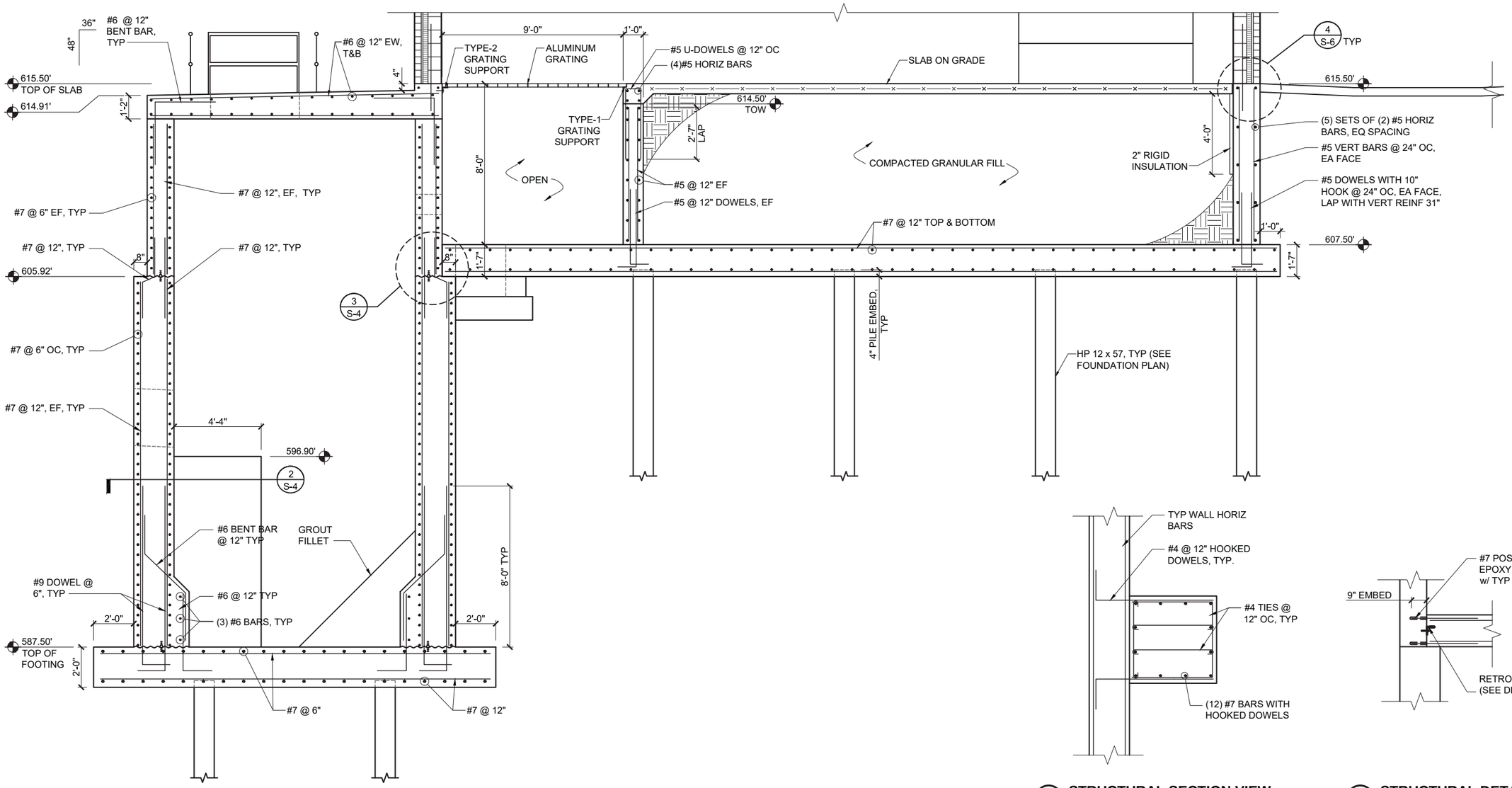

2 S-4 **STRUCTURAL SECTION VIEW**
0 1 2 4 6 3/8" = 1'-0" (22x34) 3/16" = 1'-0" (11x17)

3 S-4 **STRUCTURAL DETAIL**
0 1 2 4 6 3/8" = 1'-0" (22x34) 3/16" = 1'-0" (11x17)

1 S-4 **STRUCTURAL SECTION VIEW**
0 1 2 4 6 3/8" = 1'-0" (22x34) 3/16" = 1'-0" (11x17)

PROJECT NO.: 00616135	SCALE: AS SHOWN	NO.	DATE	REVISION	BY
PROJECT DATE: 1-10-2020	DRAWN BY: MLB	.	.	.	.
F.B. : .	CHECKED BY: SCR	.	.	.	.
.	.	.	.	.	.

PLOT DATE: 1/14/20, P:\610s\616\00616135\CADD\Construction Drawings\3-Structural\S4.0 Structural Section.dwg

I HEREBY CERTIFY THAT THIS PLAN, REPORT, OR SPECIFICATION WAS PREPARED BY ME OR UNDER MY DIRECT SUPERVISION AND THAT I AM A DULY LICENSED ARCHITECT AND PROFESSIONAL ENGINEER UNDER THE LAWS OF THE STATE OF MINNESOTA.

1/10/2020 Date — 53032 License No.

KEITH M. SCHINKOETH

MSA

ENGINEERING | ARCHITECTURE | SURVEYING
FUNDING | PLANNING | ENVIRONMENTAL
332 W Superior Street, Duluth MN 55802
(218) 722-3915 www.msa-ps.com

© MSA Professional Services, Inc.

LIFT STATION 15 RELOCATION
CITY OF DULUTH, MINNESOTA
2114 W MICHIGAN STREET

STRUCTURAL SECTION

FILE NO. 00616135

SHEET S-4

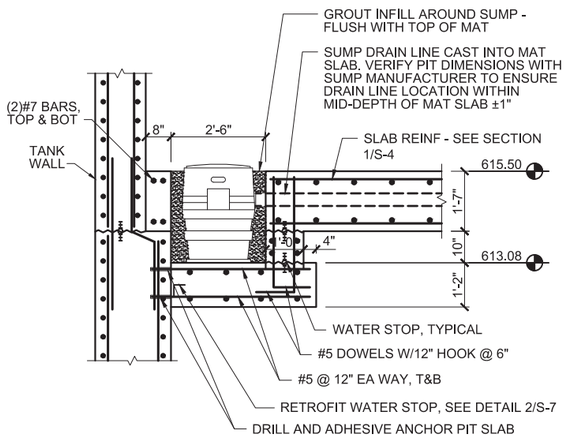

2/S-5 TYPICAL SUMP PIT DETAIL

NOT TO SCALE

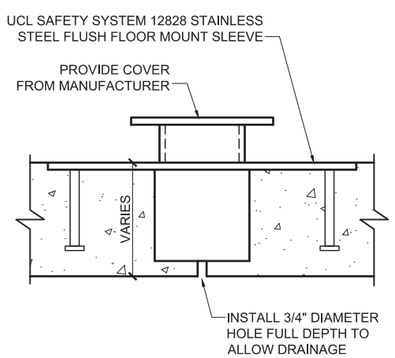

NOTE: STANCHION BASES CAN NOT BE FABRICATED BY THE CONTRACTOR.

3/S-5 FLUSH STANCHION BASE FOR NEW CONCRETE

NOT TO SCALE

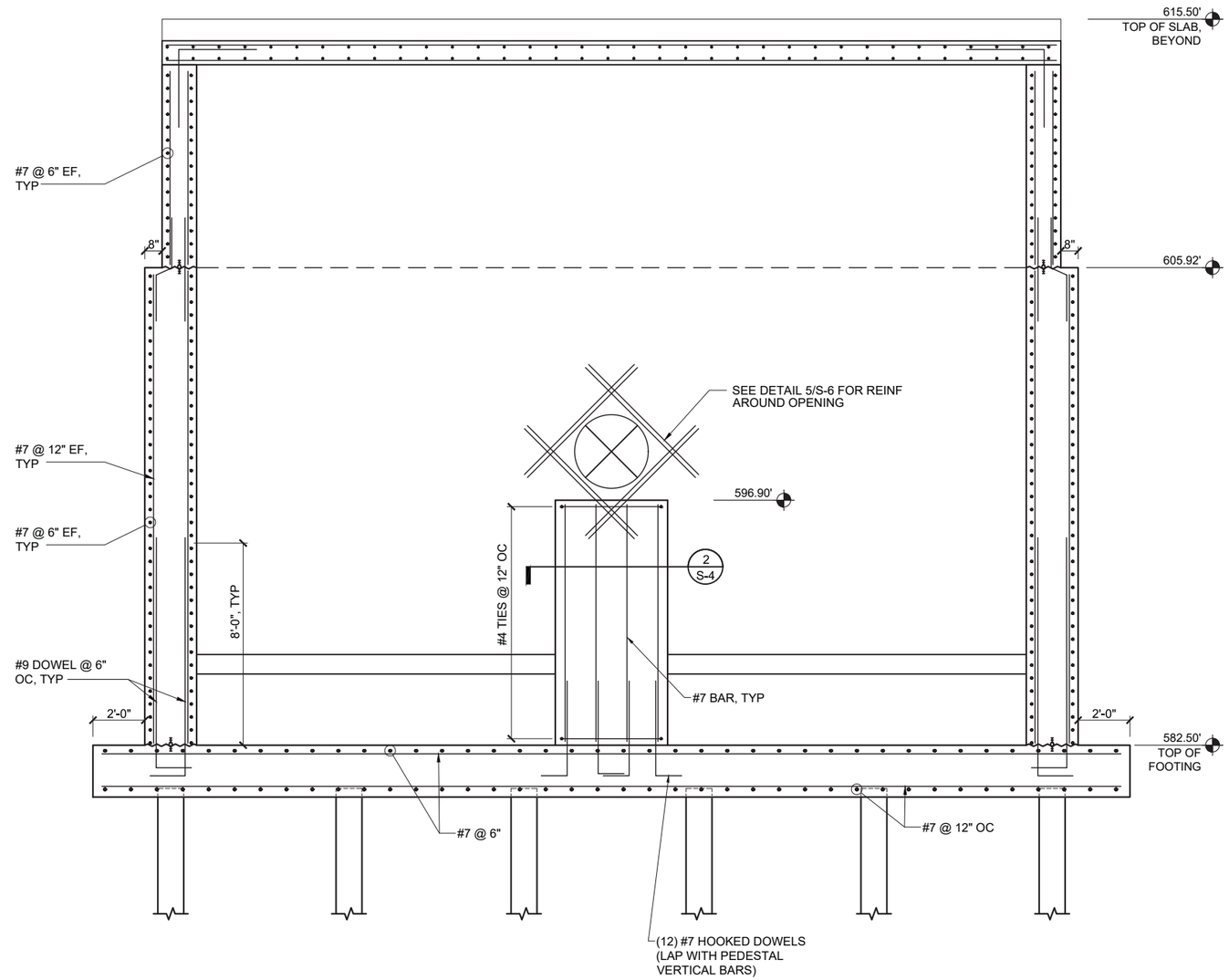

1/S-5 WET WELL WEST SECTION VIEW

NOT TO SCALE

PROJECT NO.: 00616135	SCALE: AS SHOWN	NO.	DATE	REVISION	BY
PROJECT DATE: 1-10-2020	DRAWN BY: MLB	.	.	.	.
F.B.: .	CHECKED BY: SCR	.	.	.	.
.	.	.	.	.	.

PLOT DATE: 1/14/20, P:\610s\616\00616135\CADD\Construction Drawings\3-Structural\S5.0 Wet Well Sections.dwg

I HEREBY CERTIFY THAT THIS PLAN, REPORT, OR SPECIFICATION WAS PREPARED BY ME OR UNDER MY DIRECT SUPERVISION AND THAT I AM A DULY LICENSED ARCHITECT AND PROFESSIONAL ENGINEER UNDER THE LAWS OF THE STATE OF MINNESOTA.

1/10/2020 Date — 53032 License No.

KEITH M. SCHINKOETH

MSA
ENGINEERING | ARCHITECTURE | SURVEYING
FUNDING | PLANNING | ENVIRONMENTAL
332 W Superior Street, Duluth MN 55802
(218) 722-3915 www.msa-ps.com
© MSA Professional Services, Inc.

LIFT STATION 15 RELOCATION
CITY OF DULUTH, MINNESOTA
2114 W MICHIGAN STREET

WET WELL SECTION

FILE NO: 00616135

SHEET S-5

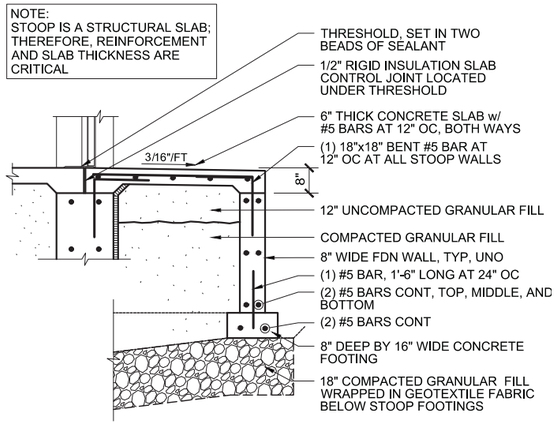

1 S-6 TYPICAL STOOP DETAIL
NOT TO SCALE

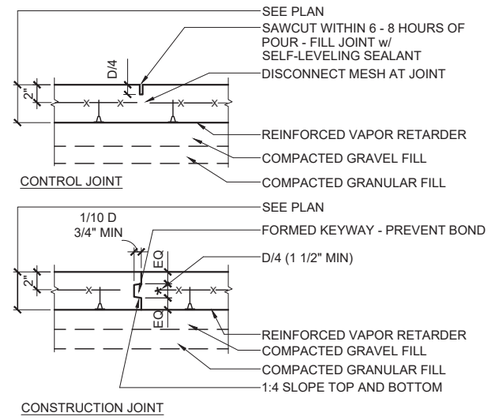

2 S-6 TYP SLAB ON GRADE JOINT (CJ) DETAIL
NOT TO SCALE

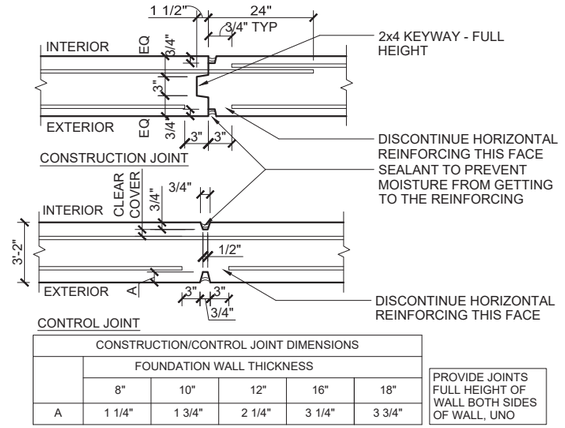

CONSTRUCTION/CONTROL JOINT DIMENSIONS					
	FOUNDATION WALL THICKNESS				
	8"	10"	12"	16"	18"
A	1 1/4"	1 3/4"	2 1/4"	3 1/4"	3 3/4"

PROVIDE JOINTS FULL HEIGHT OF WALL BOTH SIDES OF WALL, UNO

3 S-6 TYP FOUNDATION WALL JOINT (CJ) DETAIL
NOT TO SCALE

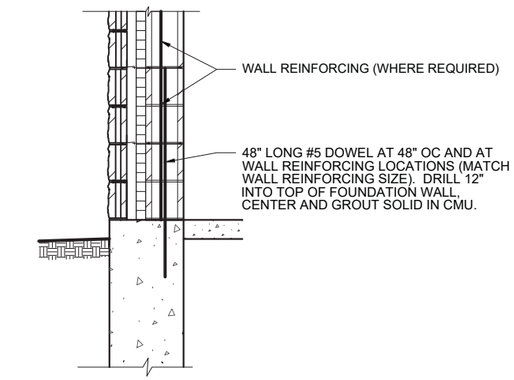

4 S-6 BASE OF WALL REINFORCING DETAIL
NOT TO SCALE

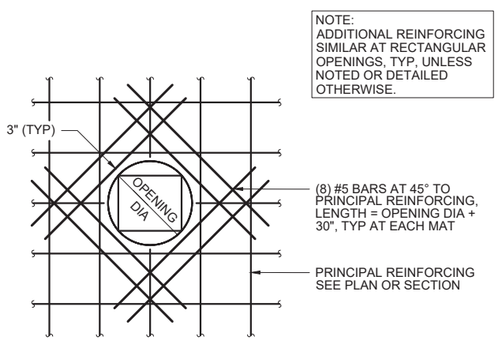

5 S-6 REINFORCING AT WALL AND SLAB OPENINGS
NOT TO SCALE

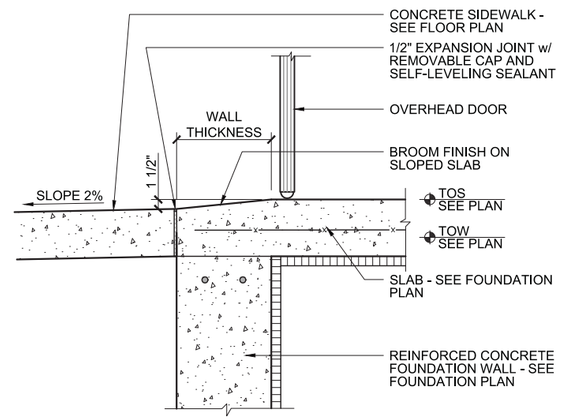

6 S-6 OVERHEAD DOOR SILL DETAIL
NOT TO SCALE

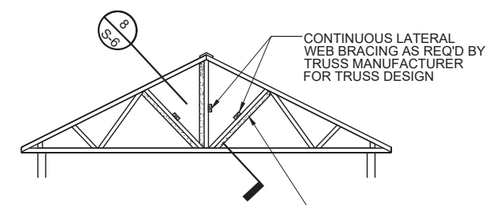

2x4 DIAGONAL BRACE AT EACH WEB MEMBER IS REQUIRED TO HAVE CONTINUOUS LATERAL BRACING. IF NO LATERAL BRACING IS REQUIRED, PLACE DIAGONAL BRACE NO GREATER THAN 16 FEET INTERVALS ALONG THE TRUSS LENGTH. ALWAYS LOCATE A DIAGONAL BRACE AS CLOSE AS POSSIBLE TO THE HIGH POINT OF THE TRUSS. THE SPACING BETWEEN SETS OF DIAGONAL BRACING SHALL BE TWICE THE HORIZONTAL RUN OF THE DIAGONAL BRACING OR 20 FEET MAXIMUM. A MINIMUM OF TWO SETS REQUIRED. INSTALL THE DIAGONAL BRACE AT A 45 DEGREE ANGLE TO THE LATERAL BRACE. ATTACH THE DIAGONAL BRACE TO THE OPPOSITE SIDE OF THE WEB MEMBER REQUIRING THE LATERAL BRACE. FASTEN THE DIAGONAL BRACE WITH (2) 16 d NAILS AT EVERY TRUSS WEB MEMBER IT CROSSES.

7 S-6 PERMANENT TRUSS BRACING DETAIL
NOT TO SCALE

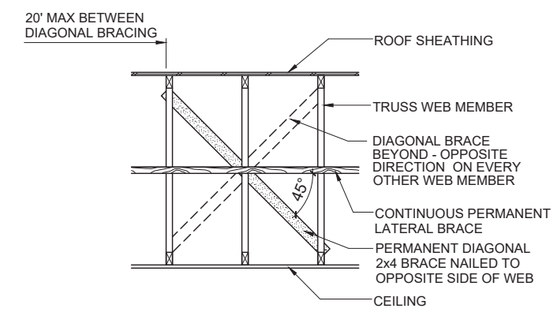

8 S-6 PERMANENT TRUSS DIAGONAL BRACE DETAIL
NOT TO SCALE

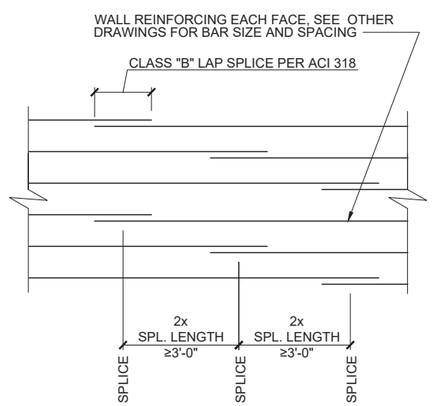

9 S-6 TYPICAL WALL STAGGERED REINFORCING SPLICE DETAIL
NOT TO SCALE

NOTES:
1. VERTICAL REINFORCING BARS NOT DEPICTED FOR CLARITY.
2. CORNER AND BENT BARS AT WALL INTERSECTIONS SHALL MATCH SIZE AND SPACING OF TYP. HORIZ. WALL REINFORCEMENT UNO.

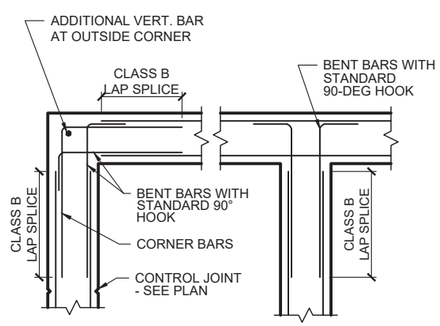

10 S-6 TYPICAL CORNER / INTERSECTION REINFORCING DETAIL
NOT TO SCALE

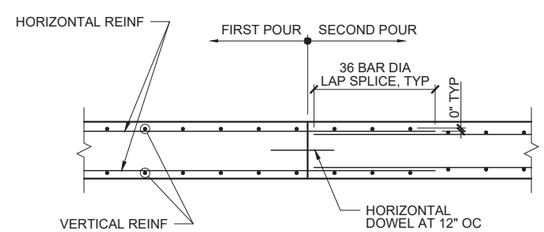

NOTES:
1. SEE ARCHITECTURAL DOCUMENTS FOR WATERSTOP REQUIREMENTS.
2. RECOMMENDED MAXIMUM JOINT SPACING IS 60'-0"

11 S-6 HORIZONTAL DOWEL REINFORCING DETAIL
NOT TO SCALE

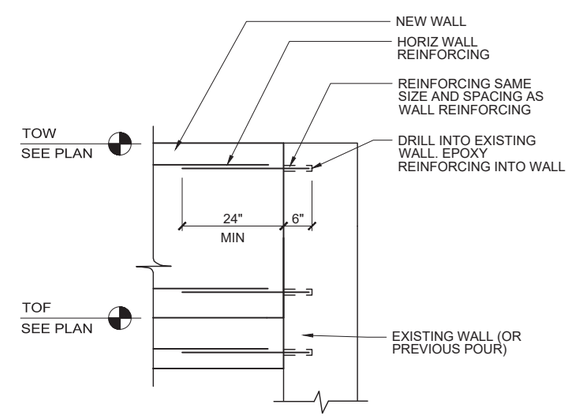

12 S-6 NEW TO EXISTING FOUNDATION DETAIL
NOT TO SCALE

PROJECT NO.: 00616135	SCALE: AS SHOWN	NO.	DATE	REVISION	BY
PROJECT DATE: 1-10-2020	DRAWN BY: MLB	.	.	.	.
F.B.: .	CHECKED BY: SCR	.	.	.	.
.		.	.	.	.
PLOT DATE: 1/14/20, P:\610s\616\00616135\CADD\Construction Drawings\3-Structural\S6.0 Structural Details.dwg					

I HEREBY CERTIFY THAT THIS PLAN, REPORT, OR SPECIFICATION WAS PREPARED BY ME OR UNDER MY DIRECT SUPERVISION AND THAT I AM A DULY LICENSED ARCHITECT AND PROFESSIONAL ENGINEER UNDER THE LAWS OF THE STATE OF MINNESOTA.

1/10/2020 Date — 53032 License No.

KEITH M. SCHINKOETH

MSA

ENGINEERING | ARCHITECTURE | SURVEYING
FUNDING | PLANNING | ENVIRONMENTAL
332 W Superior Street, Duluth MN 55802
(218) 722-3915 www.msa-ps.com

© MSA Professional Services, Inc.

LIFT STATION 15 RELOCATION
CITY OF DULUTH, MINNESOTA
2114 W MICHIGAN STREET

STRUCTURAL DETAILS

FILE NO. 00616135

SHEET S-6

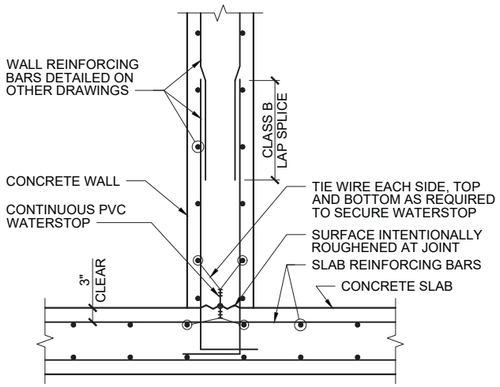

1 S-7 TYPICAL WATER RETAINING STRUCTURE CONSTRUCTION JOINT DETAIL

NOT TO SCALE

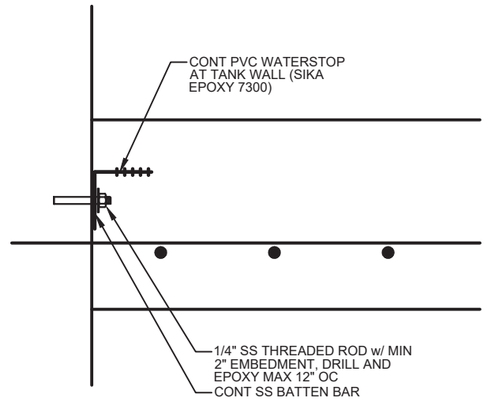

2 S-7 RETROFIT WATER STOP AT TANK WALL

NOT TO SCALE

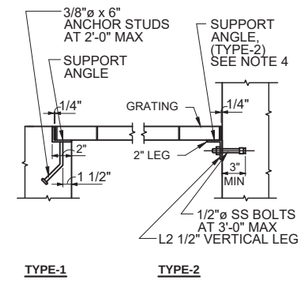

NOTES

1. SUBMIT SHOP DRAWINGS INDICATING PANEL LAYOUT. MAX GRATING PANEL SIZE SHALL BE 36". ANCHOR AND/OR FASTEN PANELS PER MANUFACTURERS RECOMMENDATIONS.
2. GENERAL CONTRACTOR SHALL CUT GRATING SUPPORT ANGLES WHERE NECESSARY FOR CLEARANCE w/ STOP PLATE GROOVES.
3. ALL ALUMINUM IN CONTACT WITH CONCRETE SHALL BE COATED w/ COAL TAR EPOXY.
4. GRATING/RAISED PATTERN PLATE SCHEDULE:

SIZE	SUPPORT ANGLE	MAX SPAN
2" x 3/16" GRATING	L2 1/2" x 2" x 3/8"	5'-0"
1/4" PLATE	L2 1/2" x 2" x 3/8"	2'-0"

5. ALL GRATING SUPPORT ANGLES SHALL BE ALUMINUM STANDARD SHAPES.
6. FOR GRATING SPANS LARGER THAN 5'-0" CONTRACTOR SHALL SELECT GRATING THAT WILL SATISFY LIVE LOADING REQUIREMENTS OF 100 PSF OR 300 LB CONCENTRATED LOAD.

3 S-7 TYPICAL GRATING/RAISED PATTERN PLATE DETAIL

NOT TO SCALE

LADDER SHALL BE DESIGNED BY MANUFACTURER TO MEET THE FOLLOWING:

- EACH RUNG SHALL BE CAPABLE OF SUPPORTING A SINGLE CONCENTRATED LOAD OF 250 POUNDS.
- CAPABLE OF SUPPORTING (2) LOADS OF 250 POUNDS EACH CONCENTRATED ON ANY (2) CONSECUTIVE ATTACHMENTS.
- LIMIT LIVE LOAD DEFLECTION TO L/480 OF COMPONENT SPAN.

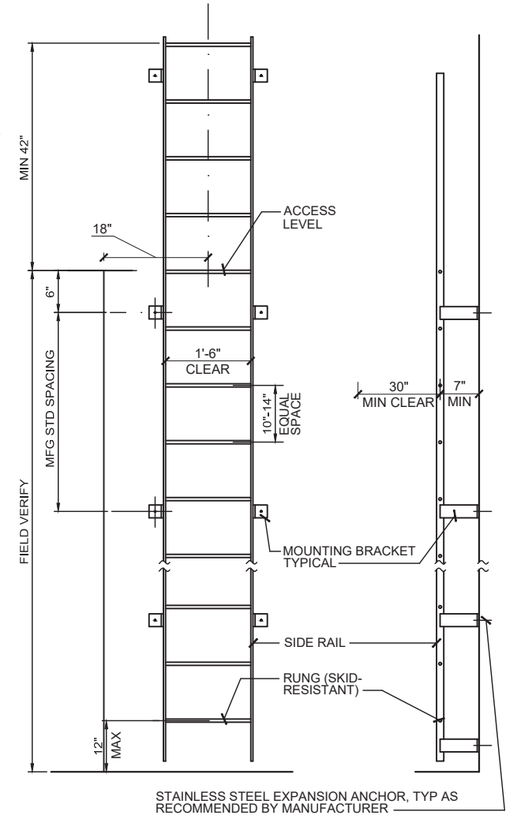

7 S-7 ALUMINUM ACCESS LADDER DETAIL

NOT TO SCALE

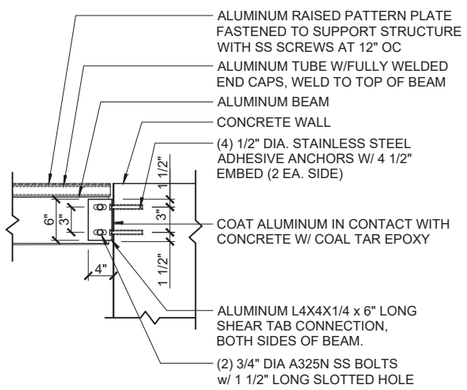

4 S-7 PLATFORM SUPPORT BEAM CONNECTION TO WALL

NOT TO SCALE

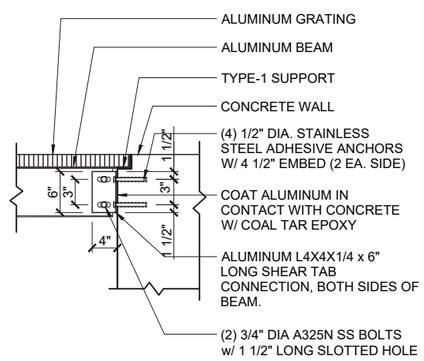

5 S-7 GRATING SUPPORT BEAM CONNECTION TO WALL

NOT TO SCALE

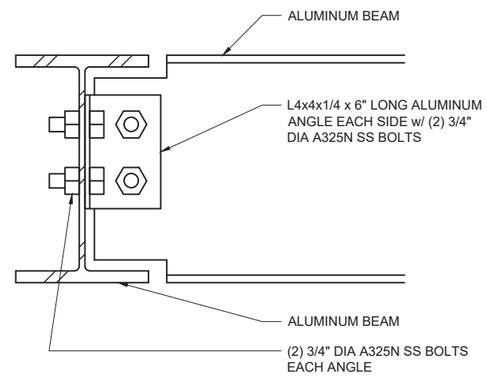

ALUMINUM SHALL BE 6061-T6 STANDARD SHAPES

6 S-7 BEAM TO BEAM CONNECTION DETAIL

NOT TO SCALE

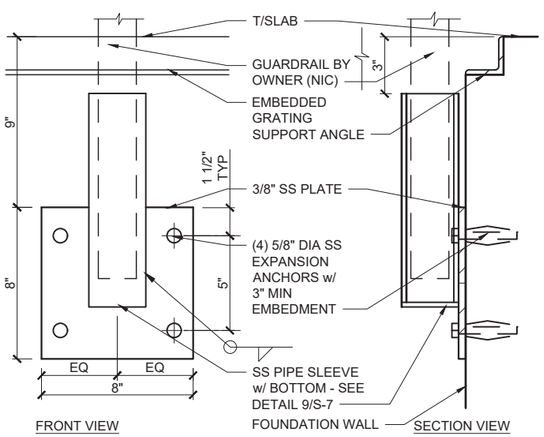

8 S-7 GUARDRAIL MOUNTING POST TO CONCRETE DETAIL

NOT TO SCALE

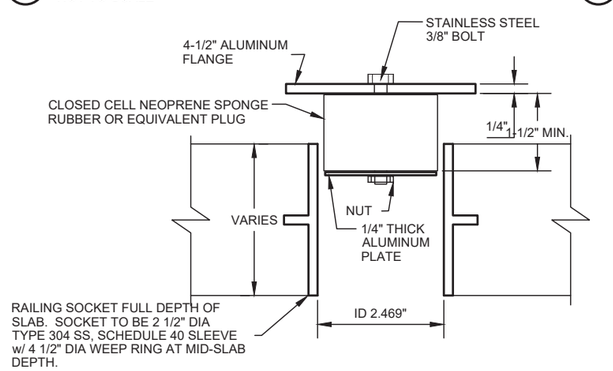

NOTES:

1. FALL PROTECTION REMOVABLE RAILING SYSTEM (1 1/2" DIA RAILING w/ TOE PLATE) TO BE PROVIDED BY OWNER (NIC).
2. PLUG TO BE COMPRESSIBLE TO FORM A TIGHT SEAL w/ SOCKET.
3. CONTRACTOR TO PROVIDE A COVER FOR EACH SOCKET.

9 S-7 FALL PROTECTION SOCKET AND COVER DETAIL

NOT TO SCALE

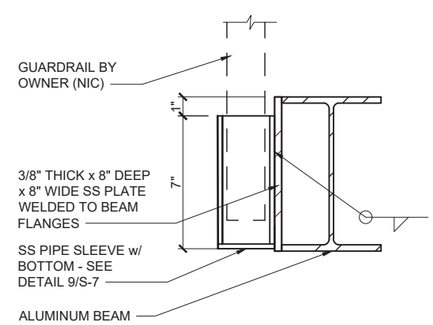

10 S-7 GUARDRAIL MOUNTING POST TO BEAM DETAIL

NOT TO SCALE

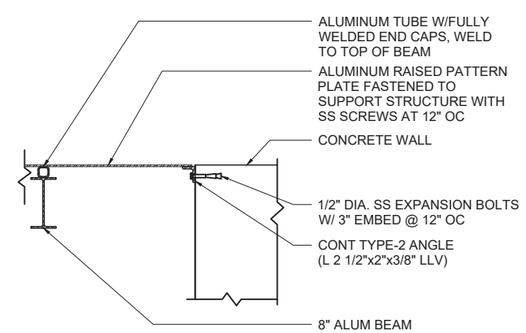

11 S-7 PLATFORM SUPPORT BEAM CONNECTION TO WALL

NOT TO SCALE

PROJECT NO.:	00616135	SCALE: AS SHOWN	NO.	DATE	REVISION	BY
PROJECT DATE:	1-10-2020	DRAWN BY: SKS	.	.	.	.
F.B.:	.	CHECKED BY: SCR	.	.	.	.
.	.	.	.	.	.	.

PLOT DATE: 1/14/20, P:\610s\616\00616135\CADD\Construction Drawings\3-Structural\S-7 Structural Details.dwg

I HEREBY CERTIFY THAT THIS PLAN, REPORT, OR SPECIFICATION WAS PREPARED BY ME OR UNDER MY DIRECT SUPERVISION AND THAT I AM A DULY LICENSED ARCHITECT AND PROFESSIONAL ENGINEER UNDER THE LAWS OF THE STATE OF MINNESOTA.

1/10/2020 Date — 53032 License No.

KEITH M. SCHINKOETH

MSA
ENGINEERING | ARCHITECTURE | SURVEYING
FUNDING | PLANNING | ENVIRONMENTAL
332 W Superior Street, Duluth MN 55802
(218) 722-3915 www.msa-ps.com
© MSA Professional Services, Inc.

LIFT STATION 15 RELOCATION
CITY OF DULUTH, MINNESOTA
2114 W MICHIGAN STREET

STRUCTURAL DETAILS

FILE NO. 00616135
SHEET S-7

NOTES:
1. THESES IMAGES ARE CONCEPTUAL AND FOR GENERAL REFERENCE - SEE DRAWINGS FOR ALL DESIGN AND DETAILING.
2. FINAL COLOR SELECTIONS TO BE DETERMINED.

PROJECT NO.:	00616135	SCALE: AS SHOWN	NO.	DATE	REVISION	BY
PROJECT DATE:	1-10-2020	DRAWN BY: JFB	.	.	.	.
F.B. :	.	CHECKED BY: AJS	.	.	.	.
.		.	.	.	.	.

PLOT DATE: 1/14/20, P:\610s\616\00616135\CADD\Construction Drawings\4-Architectural\A1.0 PERSPECTIVES.dwg

I HEREBY CERTIFY THAT THIS PLAN, REPORT, OR SPECIFICATION WAS PREPARED BY ME OR UNDER MY DIRECT SUPERVISION AND THAT I AM A DULY LICENSED ARCHITECT AND PROFESSIONAL ENGINEER UNDER THE LAWS OF THE STATE OF MINNESOTA.

1/10/2020 — Date

20405 — License No.

ALLEN J. SZYMANSKI

MSA

ENGINEERING | ARCHITECTURE | SURVEYING
FUNDING | PLANNING | ENVIRONMENTAL
332 W Superior Street, Duluth MN 55802
(218) 722-3915 www.msa-ps.com

© MSA Professional Services, Inc.

LIFT STATION 15 RELOCATION
CITY OF DULUTH, MINNESOTA
2114 W MICHIGAN STREET

PERSPECTIVES

FILE NO. 00616135

SHEET A-1

GENERAL NOTES

A. ALL DIMENSIONING IS TO FACE OF BRICK, CONCRETE MASONRY UNIT, OR CONCRETE, UNO.

B. DO NOT SCALE DRAWINGS. IF DIMENSIONS ARE IN QUESTION, THE CONTRACTOR SHALL BE RESPONSIBLE FOR OBTAINING CLARIFICATION FROM THE ARCHITECT BEFORE CONTINUING WITH CONSTRUCTION.

C. THE CONTRACT DOCUMENTS CONSIST OF THE SPECIFICATION MANUAL AND DRAWINGS WHICH ARE INTENDED TO BE COMPLEMENTARY AND TO BE USED IN CONJUNCTION WITH ONE ANOTHER.

D. IF DISCREPANCIES OCCUR BETWEEN THE SPECIFICATION MANUAL AND THE DRAWINGS, NOTIFY THE ARCHITECT FOR A RESOLUTION

E. ALL ROOFING PENETRATIONS SHALL BE FLASHED BY THE ROOFING CONTRACTOR.

F. OPENINGS FOR PLUMBING, PROCESS, VENTILATING, AND ELECTRICAL WORK IN WALLS, FLOORS, CEILING, AND ROOF SHALL BE PROVIDED BY THE GC. LOCATION AND SIZE SHALL BE THE RESPONSIBILITY OF THE RESPECTIVE CONTRACTORS. ALL PIPES THROUGH EXTERIOR WALLS SHALL BE INSTALLED BEFORE SPRAY FOAM INSULATION.

G. CONTRACTOR TO COORDINATE STRUCTURAL, ARCHITECTURAL, PLUMBING, PROCESS, AND HVAC PLANS FOR DETAILS, DIMENSIONS, ELEVATIONS, OPENINGS, ETC. NOTIFY ARCHITECT OF ANY VARIANCE BEFORE COMMENCING CONSTRUCTION.

H. IN NO CASE SHALL STRUCTURAL ALTERATIONS OR WORK AFFECTING A STRUCTURAL MEMBER BE MADE, UNLESS APPROVED BY THE ENGINEER

I. GENERAL CONTRACTOR SHALL PROVIDE ALL EQUIPMENT CONCRETE HOUSEKEEPING PADS INSIDE THE BUILDING AS INDICATED ON THE PLUMBING, PROCESS MECHANICAL, HVAC, AND ELECTRICAL DRAWINGS.

J. ALL OPENINGS THROUGH WALLS AND CEILING SHALL BE SEALED TO MAINTAIN INTEGRITY OF AIR/VAPOR RETARDER.

K. ALL EXPOSED ANCHORS, PIPING, CONDUIT, DUCTWORK, INSULATION (WITHOUT FINISHED JACKET), BRACKETS, FASTENERS, ETC, SHALL BE PAINTED, INTERIOR AND EXTERIOR, UNO.

KEY NOTES

1. FIRE EXTINGUISHER w/ BRACKET
2. PIPE BOLLARD - SEE DETAIL 6/A-7 AND CIVIL. PROVIDE BOND BREAKER AT SLAB PERIMETER.
3. ATTIC ACCESS HATCH - SEE DETAIL 10/A-7
4. 3 1/2" HIGH CONCRETE HOUSEKEEPING PAD BY GC FOR ELECTRICAL EQUIPMENT. PROVIDE 6x6-W2.9xW2.9 WWM AND CHAMFER EXPOSED EDGES. PAD TO BE 4" BEYOND FACE AND EXPOSED END OF ELECTRICAL EQUIPMENT, UNO. VERIFY FINAL SIZE REQUIRED w/ ELECTRICAL.
5. CONCRETE STOOP - SEE FOUNDATION PLAN
6. 1/2" EXPANSION JOINT MATERIALS w/ REMOVABLE CAP AND SELF-LEVELING SEALANT BETWEEN SIDEWALK, BUILDING AND STOOP FOUNDATION, TYP
7. 6" THICK CONCRETE SIDEWALK ON MIN 6" COMPACTED GRAVEL BASE AND COMPACTED GRANULAR FILL w/ BROOM FINISH AND TOOLED CONTROL JOINTS AS SHOWN. SLOPE AWAY FROM BUILDING, CROSS SLOPE MAX 1:50. RUNNING SLOPE MAX 1:20. SEE DETAIL 7/A-7.
8. STAND BY GENERATOR ON CONCRETE PAD - SEE STRUCTURAL AND ELECTRICAL
9. PIPE BOLLARD - SEE CIVIL
10. REMOVABLE ALUMINUM GRATING - SEE STRUCTURAL
11. REMOVABLE FALL PROTECTION GUARDRAIL WITH TOE KICK BY OWNER (NIC), TYP
12. MOUNT GUARDRAIL POST TO TOP OF GRATING SUPPORT BEAM - CUT GRATING AROUND POST
13. ACCESS HATCH - SEE PROCESS MECHANICAL AND STRUCTURAL. SEE SCHEDULE 3/M-7
14. WALL MOUNTED ALUMINUM LADDER - SEE DETAIL 7/S-7
15. EDGE OF PAVEMENT - SEE SITE PLAN
16. PROCESS EQUIPMENT OR PIPING, TYP - SEE PROCESS MECHANICAL
17. HINGED ALUMINUM ACCESS COVER - SEE STRUCTURAL
18. OPENING IN WALL FOR LOUVER - SEE DETAIL 2/A-8 AND HVAC
19. OPENING IN WALL FOR LOUVER ABOVE - SEE DETAIL 1/A-8 AND HVAC

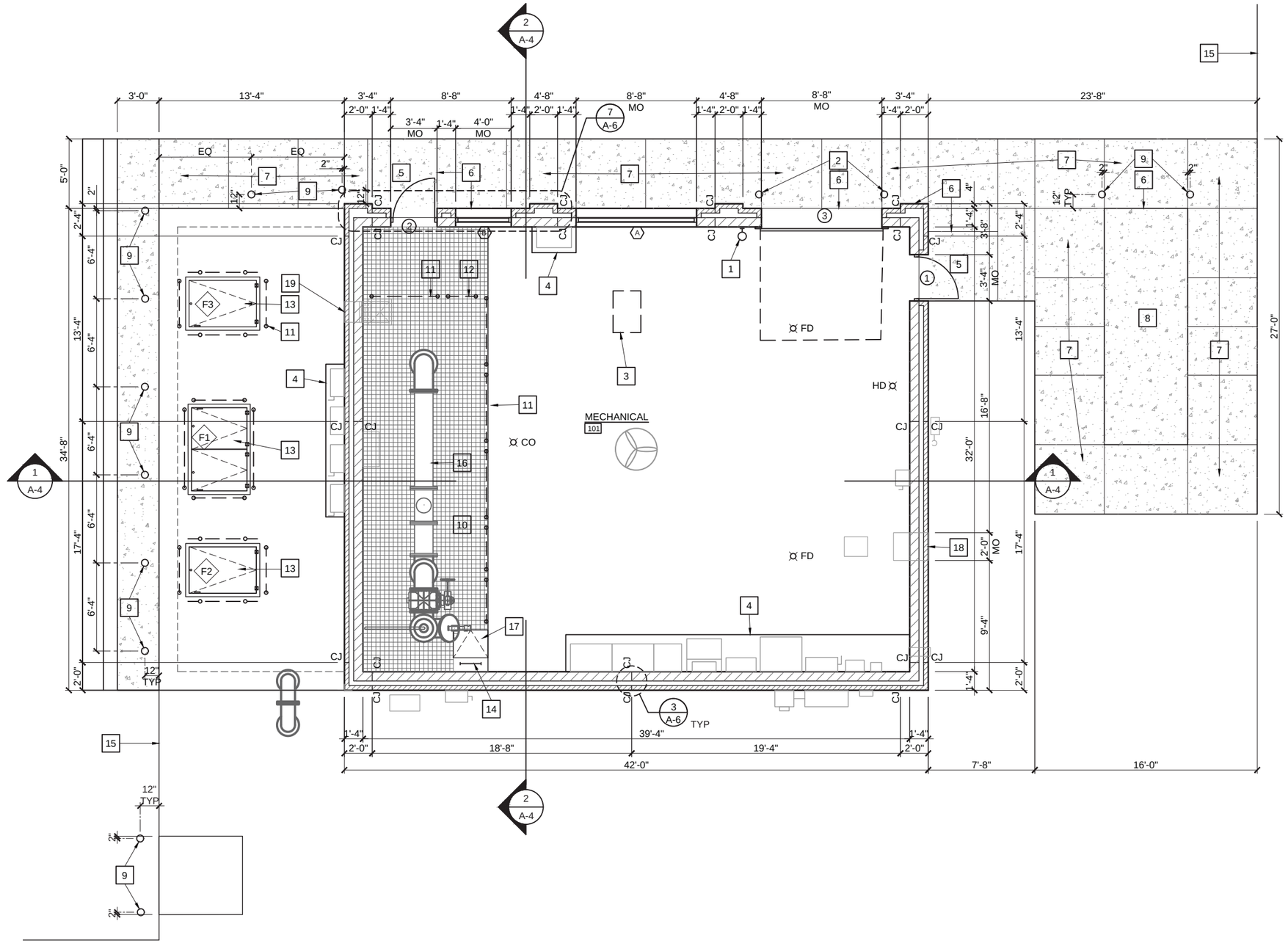

PLAN NORTH

FLOOR PLAN

0 2 4 8

1/4" = 1'-0" (22x34)
1/8" = 1'-0" (11x17)

PROJECT NO.:	00616135	SCALE: AS SHOWN	NO.	DATE	REVISION	BY
PROJECT DATE:	1-10-2020	DRAWN BY: JFB	.	.	.	.
F.B. :	.	CHECKED BY: AJS	.	.	.	.
.		.	.	.	.	.

PLOT DATE: 1/14/20, P:\610s\616\00616135\CADD\Construction Drawings\4-Architectural\A1.0 Floor Plan.dwg

I HEREBY CERTIFY THAT THIS PLAN, REPORT, OR SPECIFICATION WAS PREPARED BY ME OR UNDER MY DIRECT SUPERVISION AND THAT I AM A DULY LICENSED ARCHITECT AND PROFESSIONAL ENGINEER UNDER THE LAWS OF THE STATE OF MINNESOTA.

1/10/2020 Date

20405 License No.

ALLEN J. SZYMANSKI

332 W Superior Street, Duluth MN 55802
(218) 722-3915

LIFT STATION 15 RELOCATION
CITY OF DULUTH, MINNESOTA
2114 W MICHIGAN STREET

FLOOR PLAN

FILE NO. 00616135

SHEET A-2

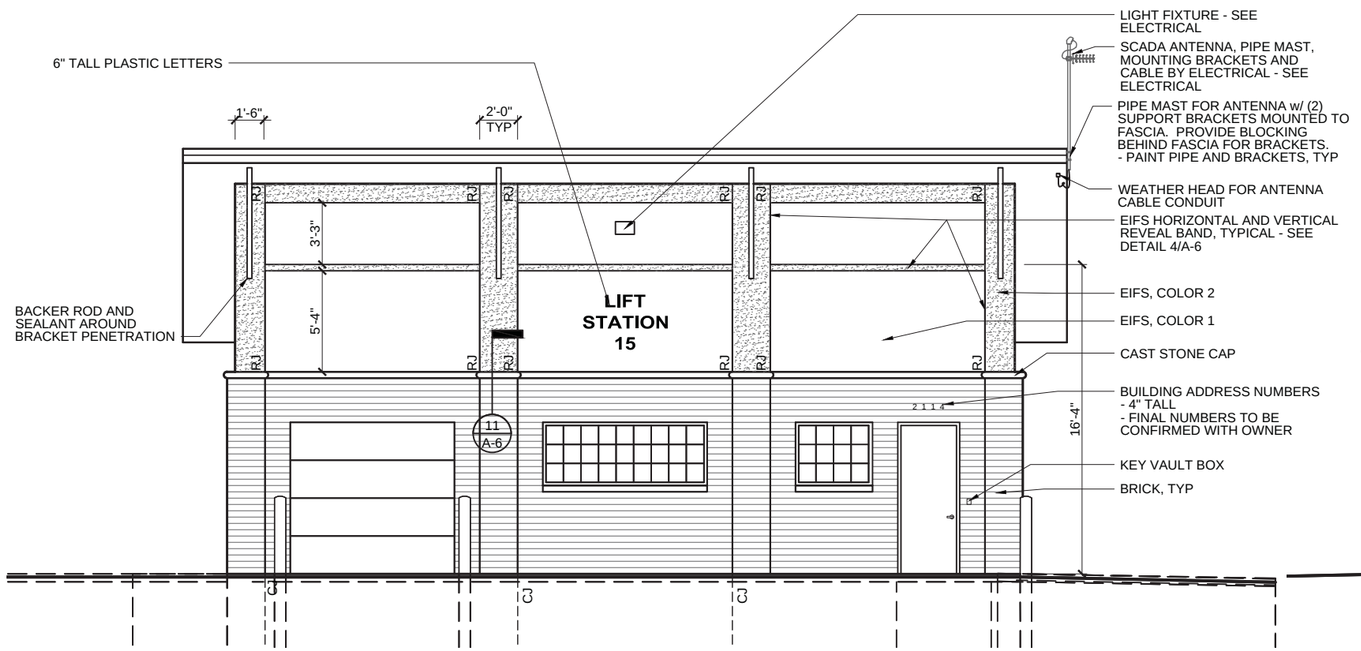

EAST ELEVATION

0 2 4 8 1/4" = 1'-0" (22x34) 1/8" = 1'-0" (11x17)

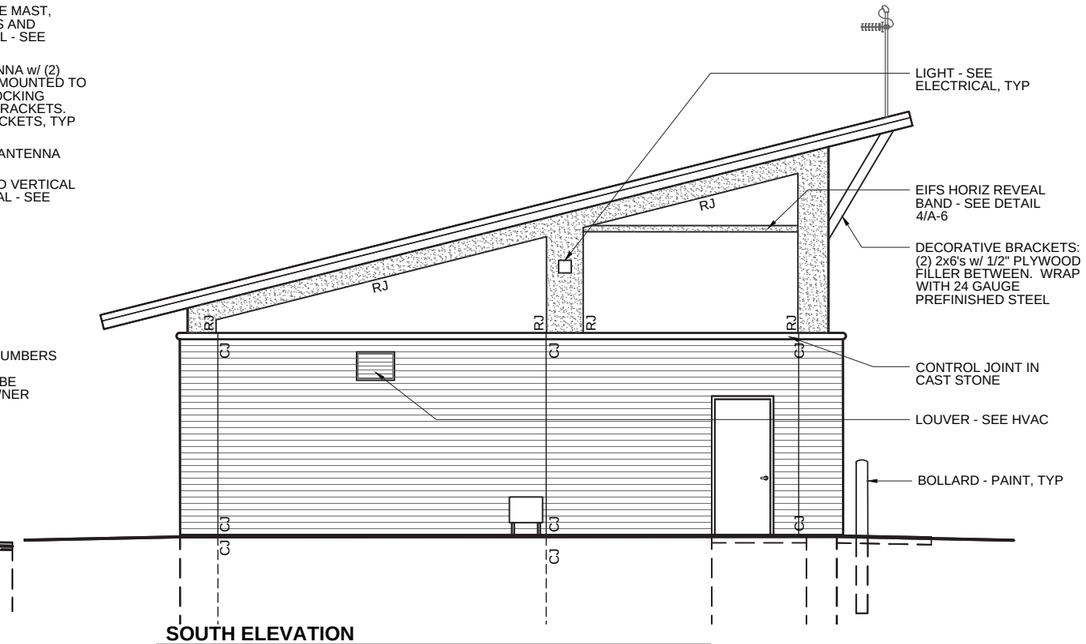

SOUTH ELEVATION

0 2 4 8 1/4" = 1'-0" (22x34) 1/8" = 1'-0" (11x17)

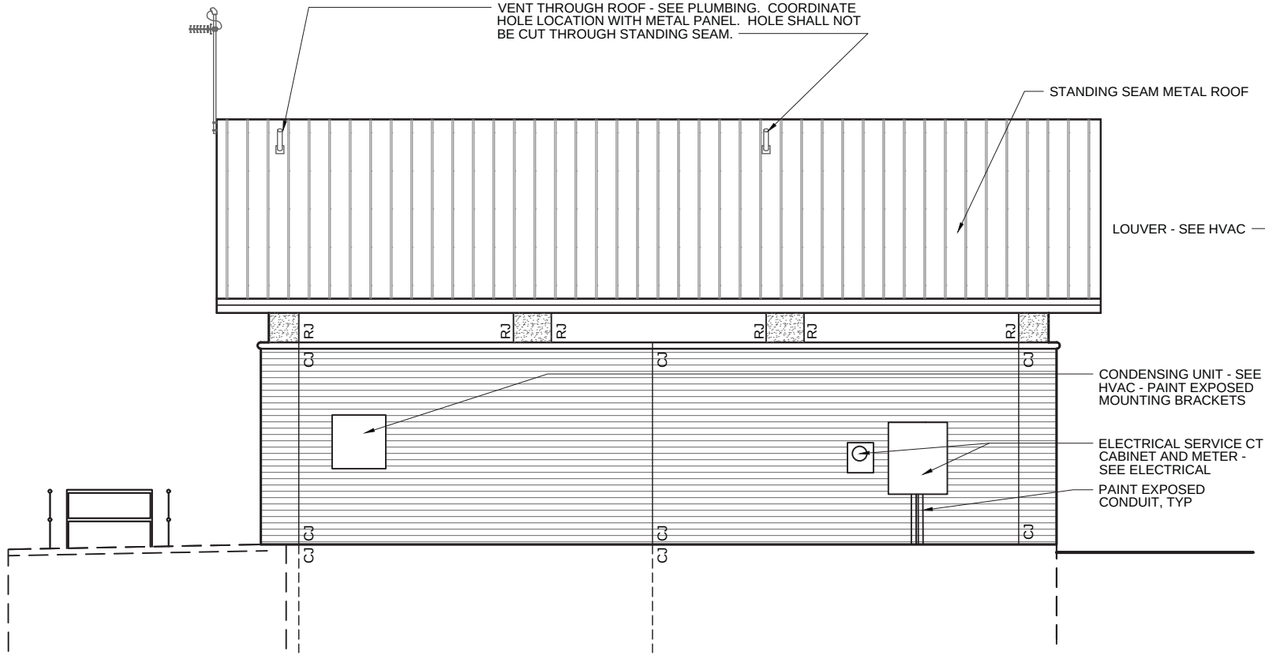

WEST ELEVATION

0 2 4 8 1/4" = 1'-0" (22x34) 1/8" = 1'-0" (11x17)

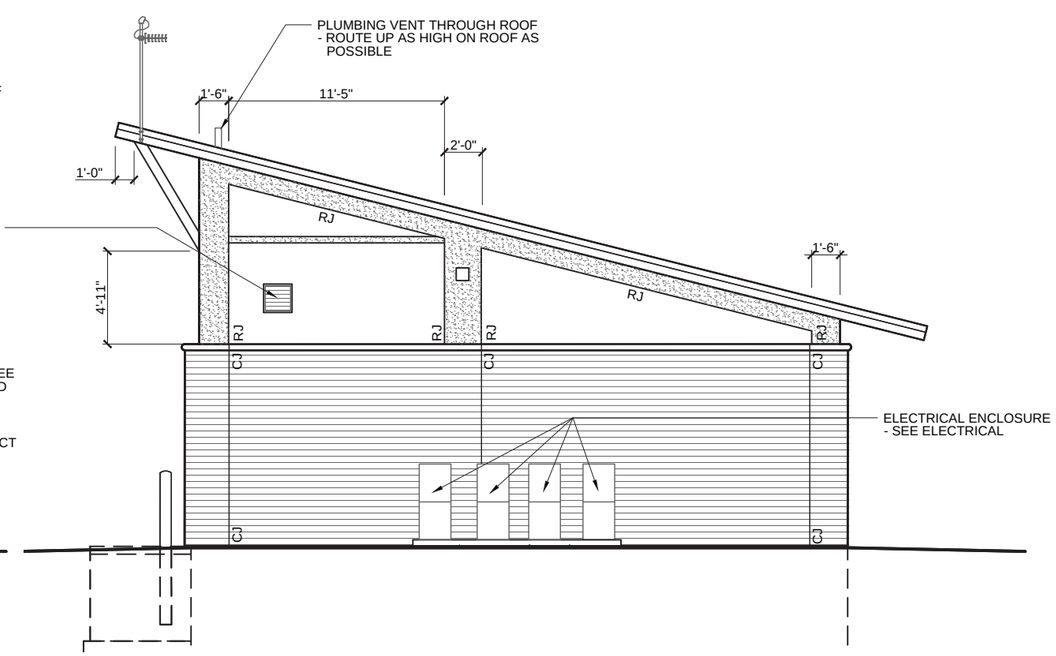

NORTH ELEVATION

0 2 4 8 1/4" = 1'-0" (22x34) 1/8" = 1'-0" (11x17)

PROJECT NO.:	00616135	SCALE: AS SHOWN	NO.	DATE	REVISION	BY
PROJECT DATE:	1-10-2020	DRAWN BY: JFB	.	.	.	.
F.B.:	.	CHECKED BY: AJS	.	.	.	.
.	.		.	.	.	.

PLOT DATE: 1/14/20, P:\610s\616\00616135\CADD\Construction Drawings\4-Architectural\A2.0 EXTERIOR ELEVATIONS.dwg

I HEREBY CERTIFY THAT THIS PLAN, REPORT, OR SPECIFICATION WAS PREPARED BY ME OR UNDER MY DIRECT SUPERVISION AND THAT I AM A DULY LICENSED ARCHITECT AND PROFESSIONAL ENGINEER UNDER THE LAWS OF THE STATE OF MINNESOTA.

1/10/2020 Date — 20405 License No.

ALLEN J. SZYMANSKI

MSA

ENGINEERING | ARCHITECTURE | SURVEYING
FUNDING | PLANNING | ENVIRONMENTAL
332 W Superior Street, Duluth MN 55802
(218) 722-3915 www.msa-ps.com

© MSA Professional Services, Inc.

LIFT STATION 15 RELOCATION
CITY OF DULUTH, MINNESOTA
2114 W MICHIGAN STREET

EXTERIOR ELEVATIONS

FILE NO. 00616135

SHEET A-3

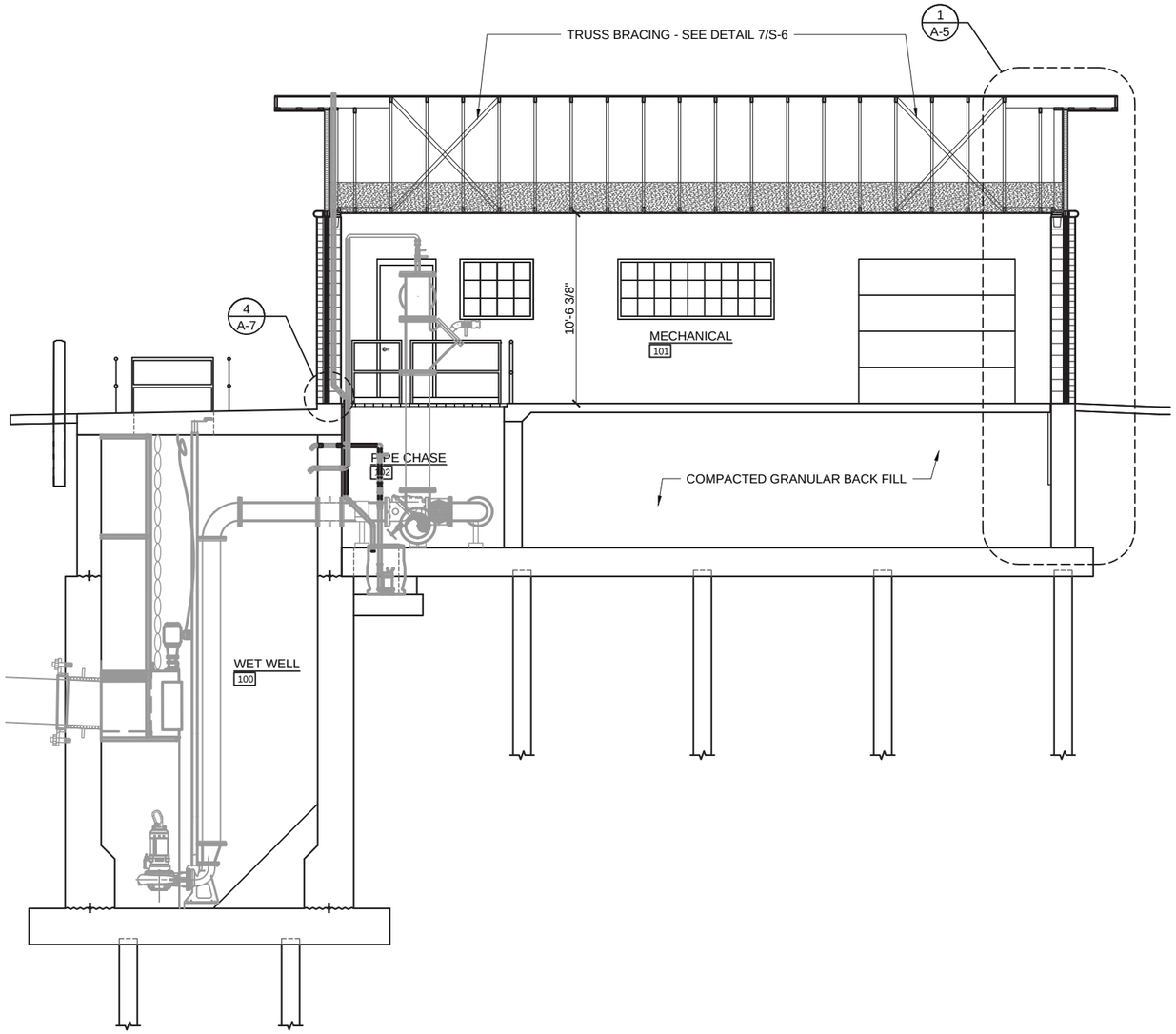

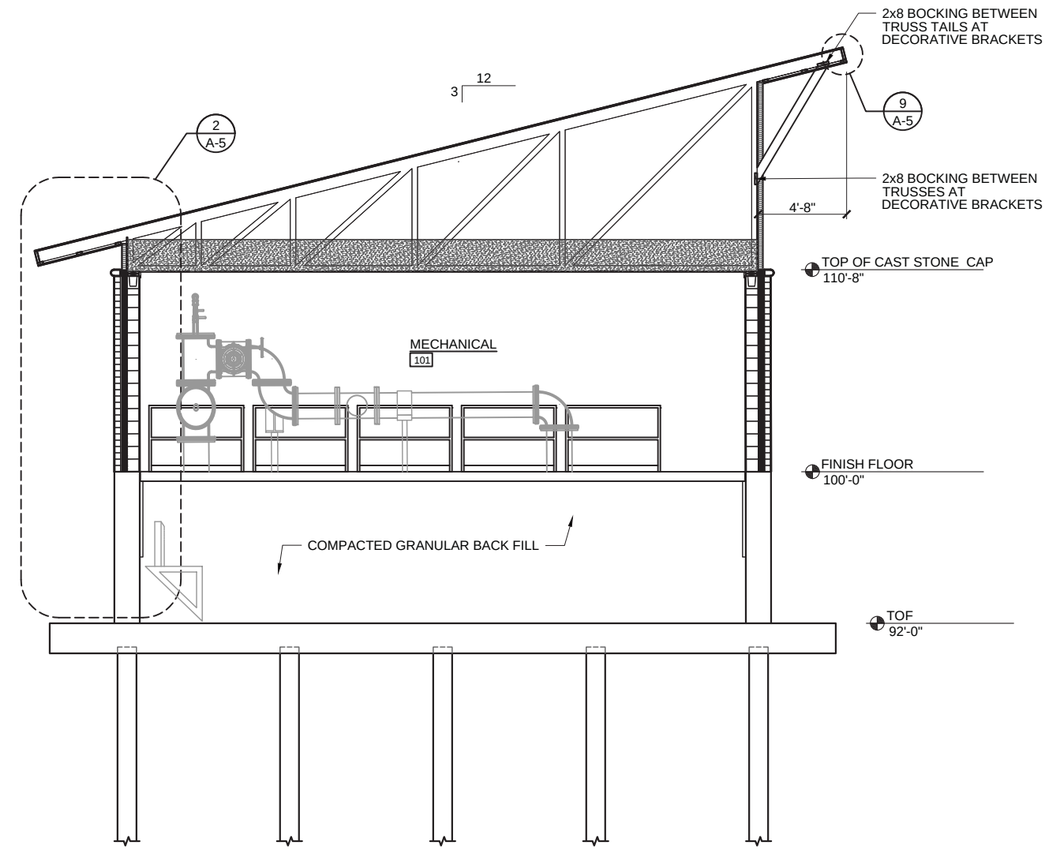

1 A-4 CROSS SECTION

0 2 4 8

1/4" = 1'-0" (22x34)
1/8" = 1'-0" (11x17)

2 A-4 CROSS SECTION

0 2 4 8

1/4" = 1'-0" (22x34)
1/8" = 1'-0" (11x17)

PROJECT NO.: 00616135	SCALE: AS SHOWN	NO.	DATE	REVISION	BY
PROJECT DATE: 1-10-2020	DRAWN BY: JFB	.	.	.	.
F.B. : .	CHECKED BY: AJS	.	.	.	.
.	.	.	.	.	.

PLOT DATE: 1/14/20. P:\610s\616\00616135\CADD\Construction Drawings\4-Architectural\A3.0 CROSS SECTIONS.dwg

I HEREBY CERTIFY THAT THIS PLAN, REPORT, OR SPECIFICATION WAS PREPARED BY ME OR UNDER MY DIRECT SUPERVISION AND THAT I AM A DULY LICENSED ARCHITECT AND PROFESSIONAL ENGINEER UNDER THE LAWS OF THE STATE OF MINNESOTA.

1/10/2020 Date — 20405 License No.

ALLEN J. SZYMANSKI

MSA

ENGINEERING | ARCHITECTURE | SURVEYING
FUNDING | PLANNING | ENVIRONMENTAL
332 W Superior Street, Duluth MN 55802
(218) 722-3915 www.msa-ps.com

© MSA Professional Services, Inc.

LIFT STATION 15 RELOCATION
CITY OF DULUTH, MINNESOTA
2114 W MICHIGAN STREET

CROSS SECTIONS

FILE NO. 00616135

SHEET A-4

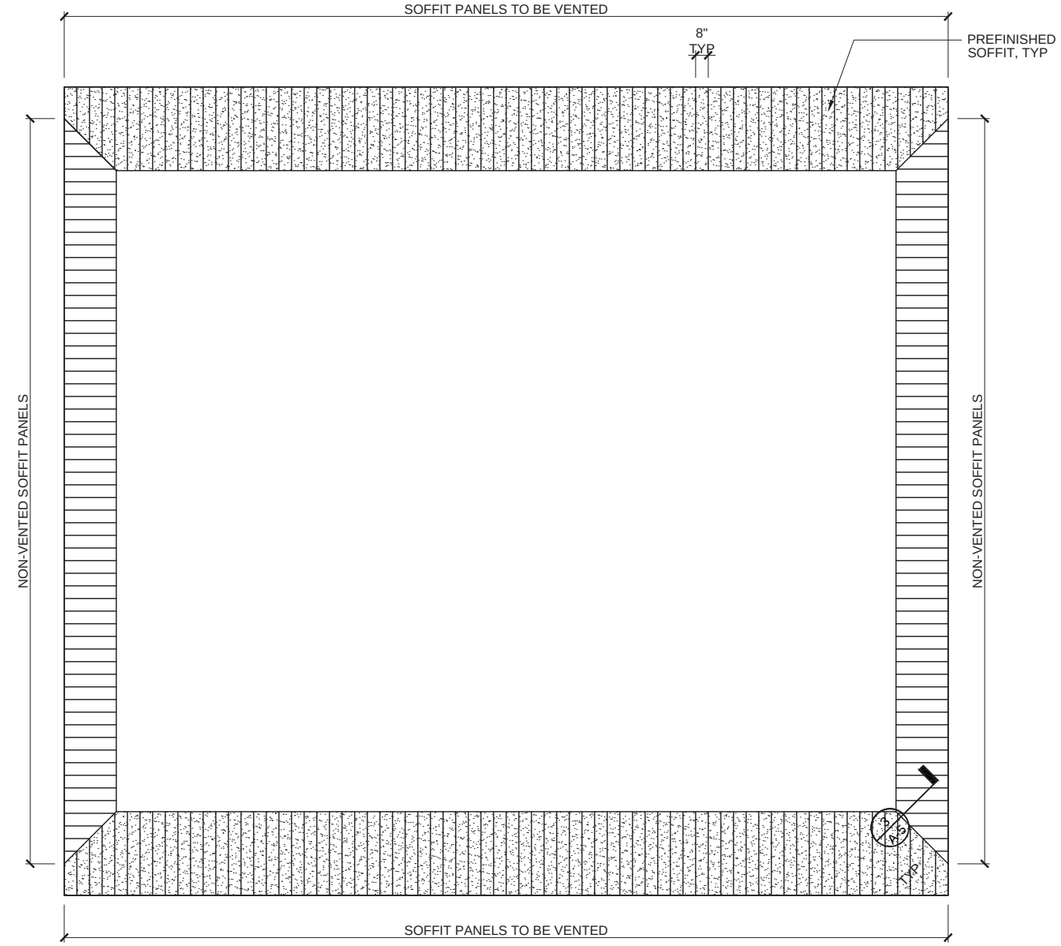

PLAN NORTH

SOFFIT PANEL PLAN

0 2 4 8 1/4" = 1'-0" (22x34)
1/8" = 1'-0" (11x17)

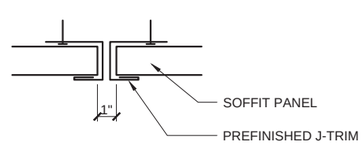

3 A-5 SOFFIT PANEL MITER DETAIL

NOT TO SCALE

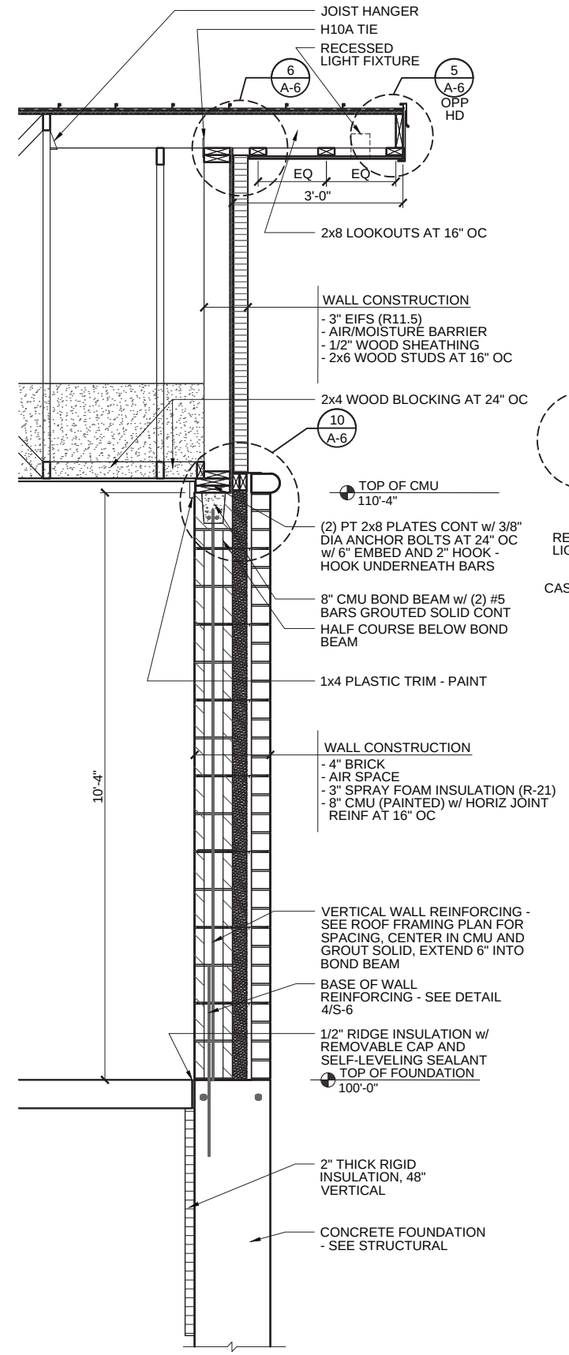

1 A-5 WALL SECTION AT SIDEWALL

0 6" 1' 2' 3' 3/4" = 1'-0" (22x34)
3/8" = 1'-0" (11x17)

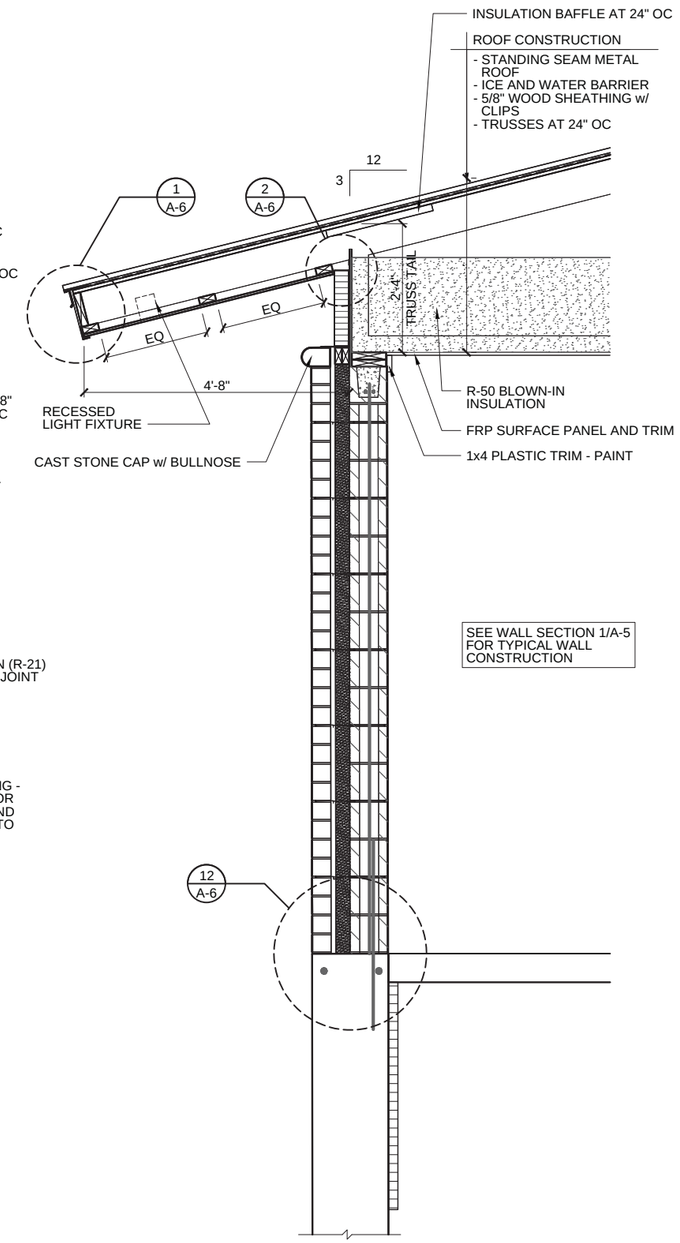

2 A-5 WALL SECTION AT EAVE

0 6" 1' 2' 3' 3/4" = 1'-0" (22x34)
3/8" = 1'-0" (11x17)

PROJECT NO.: 00616135	SCALE: AS SHOWN	NO.	DATE	REVISION	BY
PROJECT DATE: 1-10-2020	DRAWN BY: JFB	.	.	.	.
F.B. : .	CHECKED BY: AJS	.	.	.	.
.	.	.	.	.	.

PLOT DATE: 1/14/20, P:\610s\616\00616135\CADD\Construction Drawings\4-Architectural\A4.0 WALL SECTIONS.dwg

I HEREBY CERTIFY THAT THIS PLAN, REPORT, OR SPECIFICATION WAS PREPARED BY ME OR UNDER MY DIRECT SUPERVISION AND THAT I AM A DULY LICENSED ARCHITECT AND PROFESSIONAL ENGINEER UNDER THE LAWS OF THE STATE OF MINNESOTA.

1/10/2020 Date — 20405 License No.

ALLEN J. SZYMANSKI

MSA

ENGINEERING | ARCHITECTURE | SURVEYING
FUNDING | PLANNING | ENVIRONMENTAL
332 W Superior Street, Duluth MN 55802
(218) 722-3915 www.msa-ps.com

© MSA Professional Services, Inc.

LIFT STATION 15 RELOCATION
CITY OF DULUTH, MINNESOTA
2114 W MICHIGAN STREET

WALL SECTIONS

FILE NO. 00616135

SHEET A-5

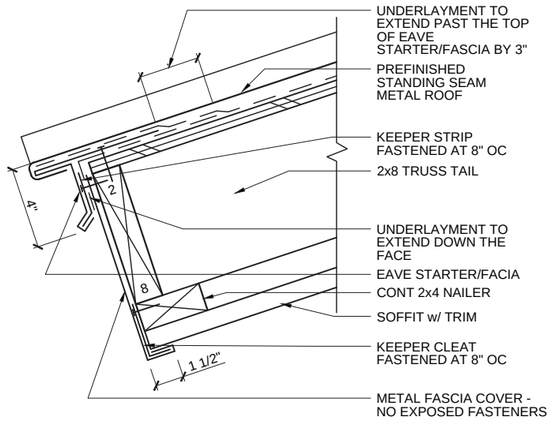

1 A-6 TYPICAL ROOF EDGE EAVE DETAIL

0 1½" 3" 6" 9" 3" = 1'-0" (22x34) 1 1/2" = 1'-0" (11x17)

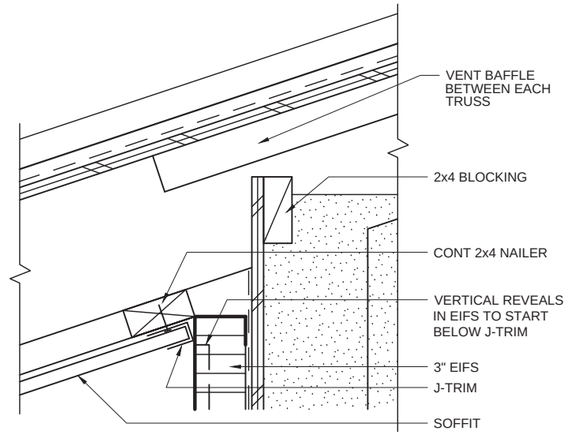

2 A-6 TYPICAL WALL/SOFFIT CONNECTION

0 1½" 3" 6" 9" 3" = 1'-0" (22x34) 1 1/2" = 1'-0" (11x17)

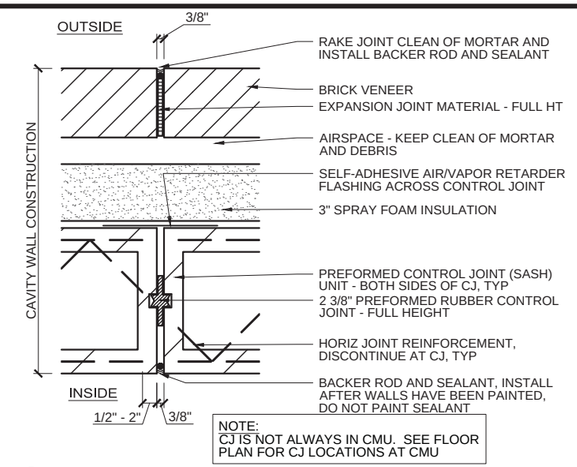

3 A-6 EXTERIOR WALL CMU JOINT (CJ) DETAIL

0 1½" 3" 6" 9" 3" = 1'-0" (22x34) 1 1/2" = 1'-0" (11x17)

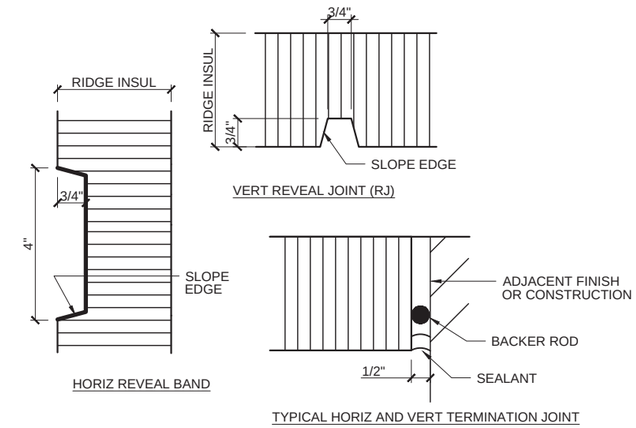

4 A-6 TYPICAL EIFS JOINT DETAILS

NOT TO SCALE

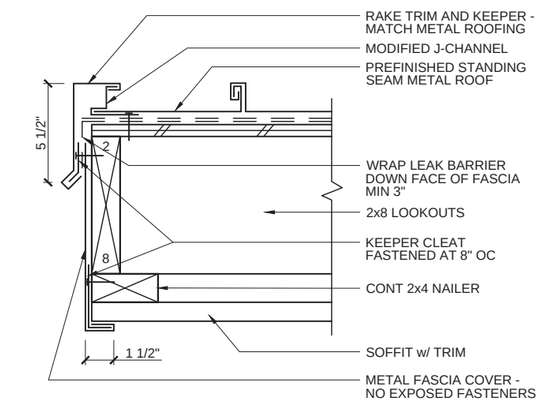

5 A-6 TYPICAL ROOF EDGE GABLE DETAIL

0 1½" 3" 6" 9" 3" = 1'-0" (22x34) 1 1/2" = 1'-0" (11x17)

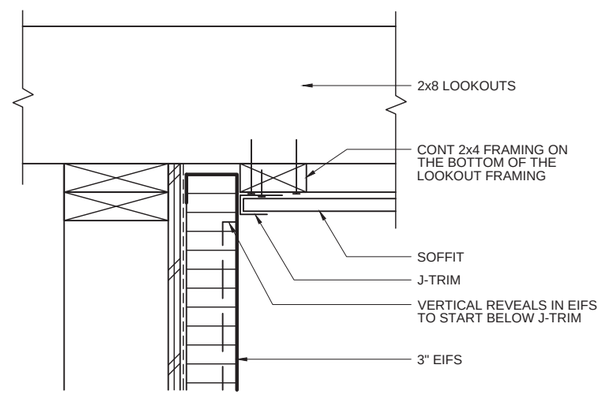

6 A-6 TYPICAL SOFFIT/WALL CONNECTION

0 1½" 3" 6" 9" 3" = 1'-0" (22x34) 1 1/2" = 1'-0" (11x17)

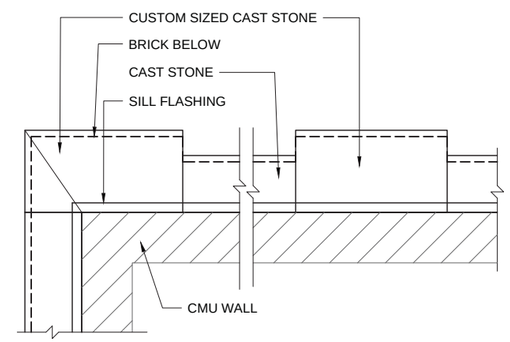

7 A-6 PLAN VIEW AT CAST STONE CAP/WALL DETAIL

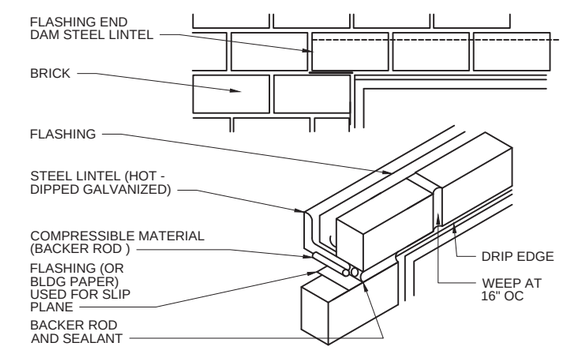

8 A-6 TYP EXTERIOR CAVITY WALL CJ AT DOOR HEAD AT VENEER

NOT TO SCALE

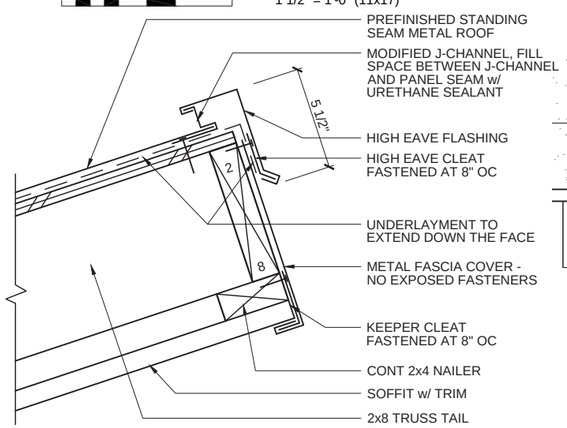

9 A-6 TYPICAL ROOF EDGE HIGH GABLE DETAIL

0 1½" 3" 6" 9" 3" = 1'-0" (22x34) 1 1/2" = 1'-0" (11x17)

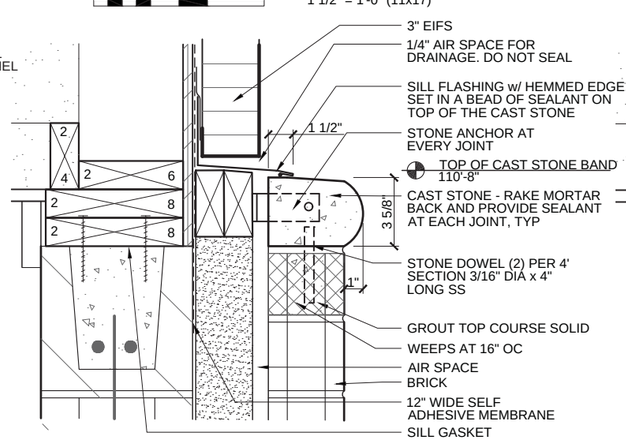

10 A-6 TYPICAL CAST STONE CAP/ WALL DETAIL

0 1½" 3" 6" 9" 3" = 1'-0" (22x34) 1 1/2" = 1'-0" (11x17)

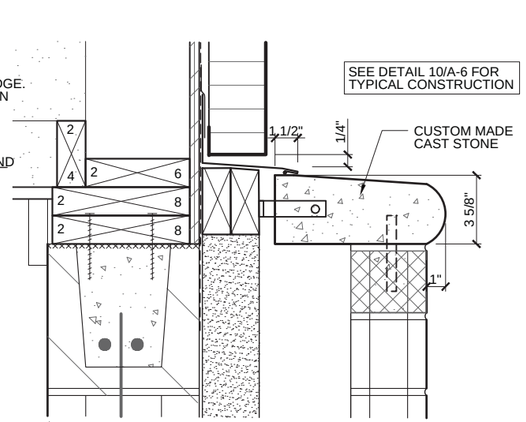

11 A-6 CAST STONE CAP/WALL DETAIL AT BRICK BUMP OUT

0 1½" 3" 6" 9" 3" = 1'-0" (22x34) 1 1/2" = 1'-0" (11x17)

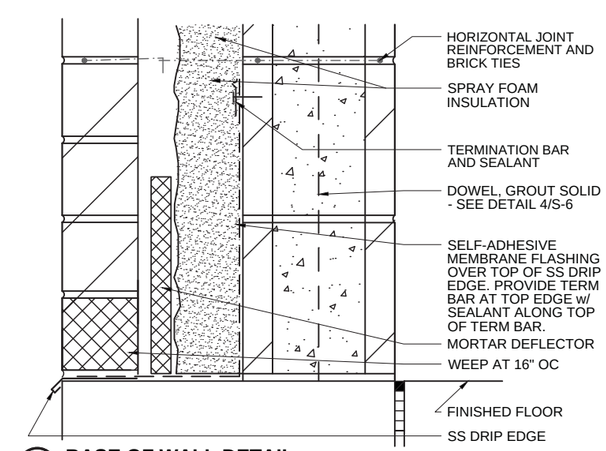

12 A-6 BASE OF WALL DETAIL

0 1½" 3" 6" 9" 3" = 1'-0" (22x34) 1 1/2" = 1'-0" (11x17)

PROJECT NO.: 00616135	SCALE: AS SHOWN	NO.	DATE	REVISION	BY
PROJECT DATE: 1-10-2020	DRAWN BY: JFB	.	.	.	.
F.B. : .	CHECKED BY: AJS	.	.	.	.
.	.	.	.	.	.

PLOT DATE: 1/14/20, P:\610s\616\00616135\CADD\Construction Drawings\4-Architectural\A5.0 DETAILS.dwg

I HEREBY CERTIFY THAT THIS PLAN, REPORT, OR SPECIFICATION WAS PREPARED BY ME OR UNDER MY DIRECT SUPERVISION AND THAT I AM A DULY LICENSED ARCHITECT AND PROFESSIONAL ENGINEER UNDER THE LAWS OF THE STATE OF MINNESOTA.

1/10/2020 Date — 20405 License No.

ALLEN J. SZYMANSKI

MSA

ENGINEERING | ARCHITECTURE | SURVEYING
FUNDING | PLANNING | ENVIRONMENTAL
332 W Superior Street, Duluth MN 55802
(218) 722-3915 www.msa-ps.com

© MSA Professional Services, Inc.

LIFT STATION 15 RELOCATION
CITY OF DULUTH, MINNESOTA
2114 W MICHIGAN STREET

DETAILS

FILE NO. 00616135

SHEET A-6

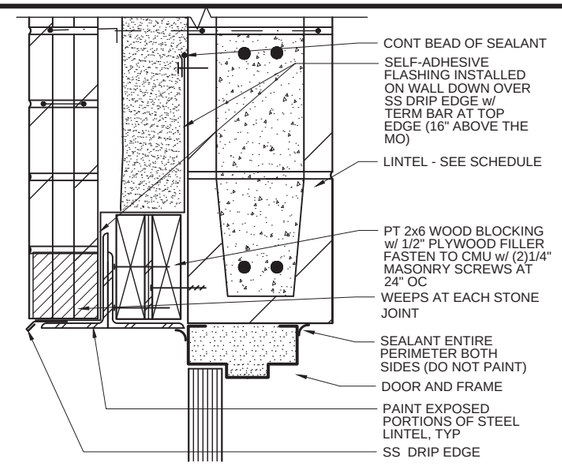

1 A-7 TYPICAL DOOR HEAD DETAIL (SIM AT WINDOW)

0 1½" 3" 6" 9" 3" = 1'-0" (22x34)
1 1/2" = 1'-0" (11x17)

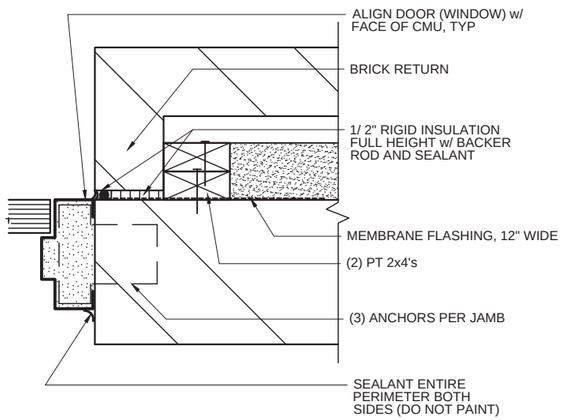

5 A-7 TYPICAL DOOR JAMB DETAIL (SIM AT WINDOW)

0 1½" 3" 6" 9" 3" = 1'-0" (22x34)
1 1/2" = 1'-0" (11x17)

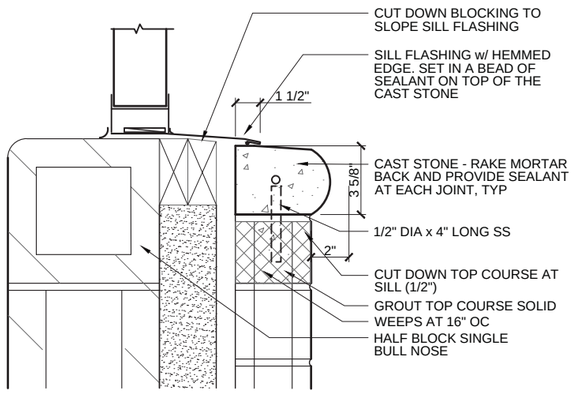

8 A-7 WINDOW SILL DETAIL

0 1½" 3" 6" 9" 3" = 1'-0" (22x34)
1 1/2" = 1'-0" (11x17)

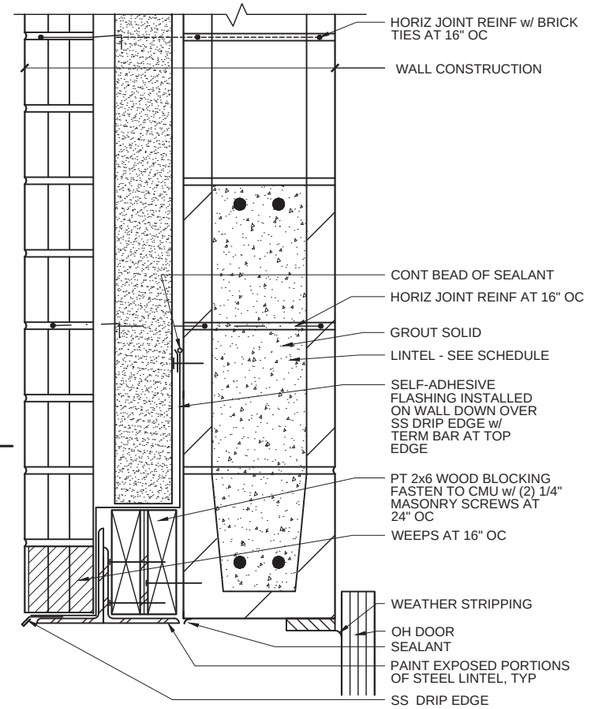

2 A-7 OH DOOR HEAD DETAIL

0 1½" 3" 6" 9" 3" = 1'-0" (22x34)
1 1/2" = 1'-0" (11x17)

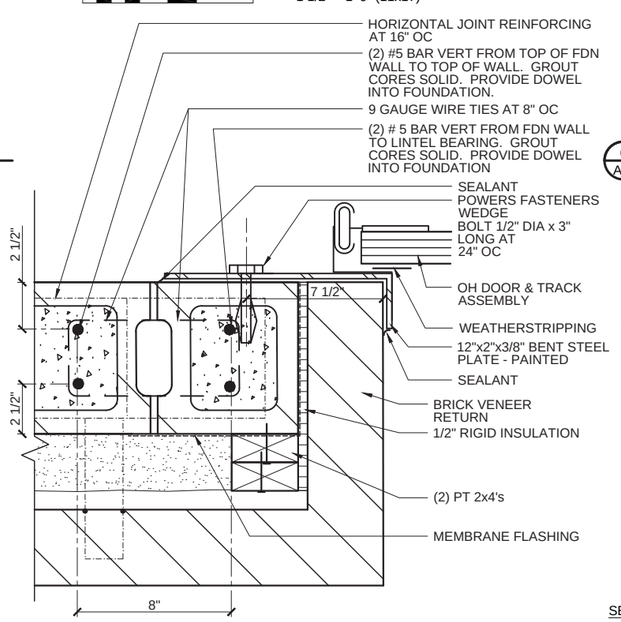

9 A-7 OH DOOR JAMB DETAIL

0 1½" 3" 6" 9" 3" = 1'-0" (22x34)
1 1/2" = 1'-0" (11x17)

3 A-7 NOT USED

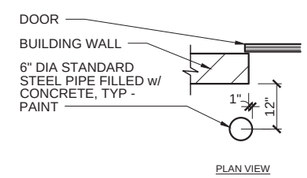

6 A-7 PIPE BOLLARD DETAIL

NOT TO SCALE

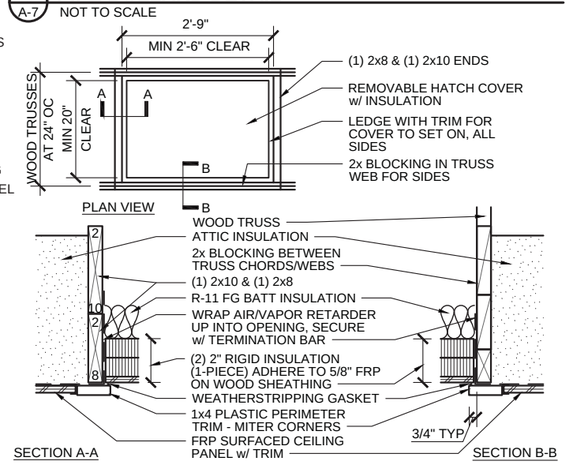

10 A-7 ATTIC ACCESS HATCH DETAIL

NOT TO SCALE

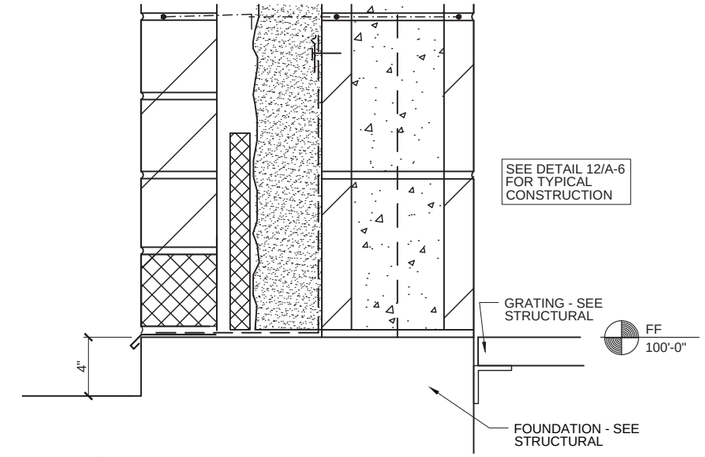

4 A-7 NORTH WALL - BASE OF WALL DETAIL

0 1½" 3" 6" 9" 3" = 1'-0" (22x34)
1 1/2" = 1'-0" (11x17)

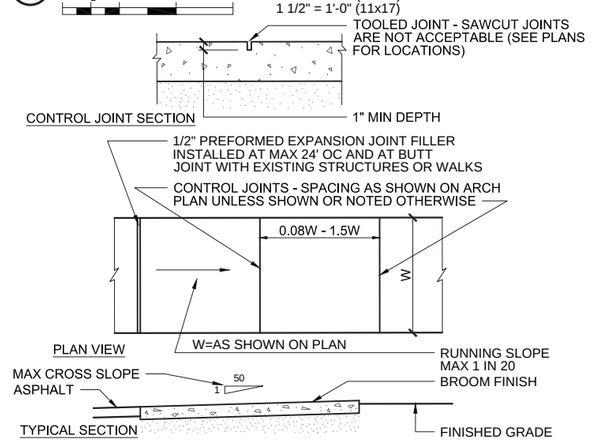

7 A-7 CONCRETE SIDEWALK DETAIL

NOT TO SCALE

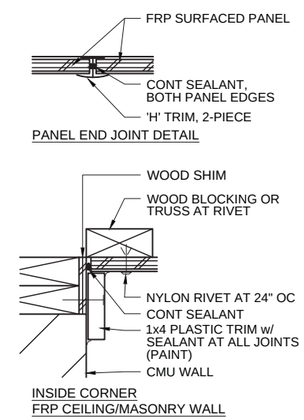

11 A-7 FIBERGLASS REINFORCED PLASTIC (FRP) SURFACE PANELS DETAILS

NOT TO SCALE

PROJECT NO.: 00616135	SCALE: AS SHOWN	NO.	DATE	REVISION	BY
PROJECT DATE: 1-10-2020	DRAWN BY: JFB	.	.	.	.
F.B. : .	CHECKED BY: AJS	.	.	.	.
.	.	.	.	.	.

PLOT DATE: 1/14/20, P:\610s\61\00616135\CADD\Construction Drawings\4-Architectural\A5.1 DETAILS.dwg

I HEREBY CERTIFY THAT THIS PLAN, REPORT, OR SPECIFICATION WAS PREPARED BY ME OR UNDER MY DIRECT SUPERVISION AND THAT I AM A DULY LICENSED ARCHITECT AND PROFESSIONAL ENGINEER UNDER THE LAWS OF THE STATE OF MINNESOTA.

1/10/2020 Date — 20405 License No.

ALLEN J. SZYMANSKI

MSA

ENGINEERING | ARCHITECTURE | SURVEYING
FUNDING | PLANNING | ENVIRONMENTAL
332 W Superior Street, Duluth MN 55802
(218) 722-3915 www.msa-ps.com

© MSA Professional Services, Inc.

LIFT STATION 15 RELOCATION
CITY OF DULUTH, MINNESOTA
2114 W MICHIGAN STREET

DETAILS

FILE NO. 00616135

SHEET A-7

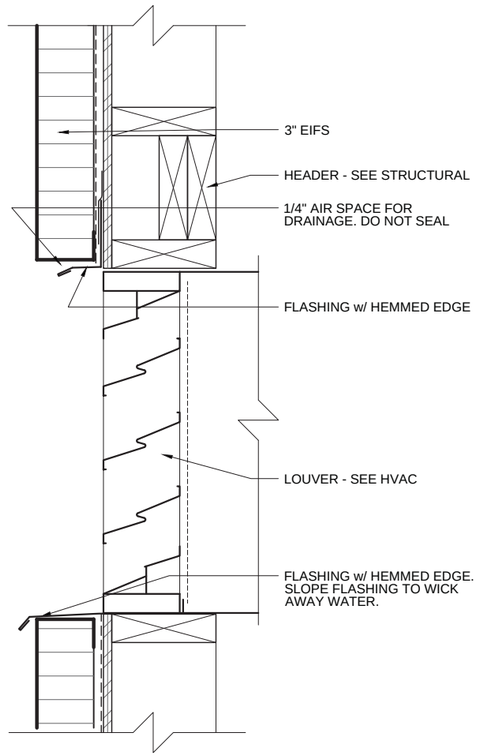

1 A-8 **LOUVER OPENING AT HEAD AND SILL DETAIL (AT EIF)**

0 1½" 3" 6" 9" 3" = 1'-0" (22x34)
1 1/2" = 1'-0" (11x17)

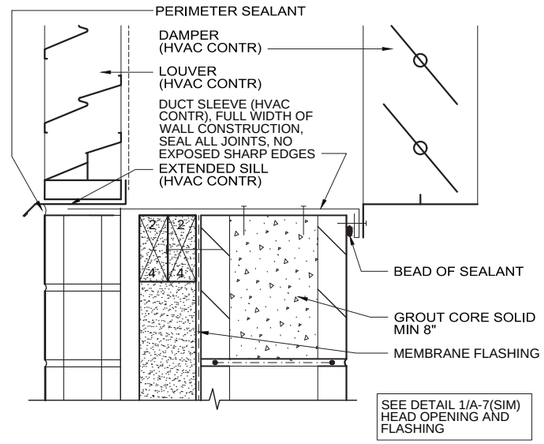

2 A-8 **LOUVER OPENING SILL DETAIL (JAMB SIM)**

0 1½" 3" 6" 9" 3" = 1'-0" (22x34)
1 1/2" = 1'-0" (11x17)

ROOM FINISH SCHEDULE

ROOM NO	ROOM NAME	FLOOR	BASE	WALLS				CEILING		REMARKS	ROOM NO
				NORTH	EAST	SOUTH	WEST	MAT'L	HEIGHT		
100	WET WELL	F2	B1	W3	W3	W3	W3	C2	26'-3"		101
101	MECHANICAL	F1	B1	W1	W1	W1	W1	C1	10'-7"	1.	101
102	PIPE CHASE	F1	B1	W2	W2	W2	W2	C3	8'-0"	1.	101

FLOOR:
F1. CONCRETE w/ SMOOTH STEEL-TROWELED FINISH w/ HEAVY DUTY FLOOR FINISH (MATTE APPEARANCE)
F2. CONCRETE - CURE AND SEAL

BASE:
B1. NONE

WALLS:
W1. CMU - PAINT
W2. CONCRETE - PAINT
W3. CONCRETE

CEILING:
C1. FRP SURFACED PANEL w/ PAINTED TRIM -SEE DETAIL 11/A-7
C2. CAST-IN-PLACE CONCRETE
C3. ALUMINUM GRATING

REMARKS
1. PAINT ALL EXPOSED DUCTWORK, PIPES, BRACKETS, CONDUITS, ETC.

DOOR & FRAME SCHEDULE

OPENING NO	DOOR					FRAME					HARDWARE SET	FIRE LABEL	GLASS TYPE	REMARKS	OPENING NO
	TYPE	MAT'L	NOMINAL SIZE			TYPE	MAT'L	DETAILS							
			WIDTH	HEIGHT	THICK			HEAD	JAMB	SILL					
1	A	FRP	3'-0"	7'-2	1 3/4"	F1	FRP	1/A-7	5/A-7	1/S-6	1	/	-	1. 2.	1
2	A	FRP	3'-0"	7'-10"	1 3/4"	F1	FRP	1/A-7	5/A-7	1/S-6	1	/	-	1. 2.	1
3	B	STL	8'-8"	8'-0"	2"	-	-	2/A-7	9/A-7	6/S-6	-	/	-	3.	2

REMARKS
1. SET THRESHOLD ON THRESHOLD GASKET (SEE HARDWARE SET)
2. PAINT DOOR AND FRAME
3. OH DOOR SIZE SCHEDULED IS MASONRY OPENING SIZE. ACTUAL OH DOOR SIZE SHALL BE 2" WIDER AND 1" TALLER

WINDOW SCHEDULE

OPENING NO	TYPE	MAT'L	NOMINAL SIZE		OPENING HEIGHT AFF	DETAILS			FIRE LABEL	GLASS TYPE	REMARKS	OPENING NO
			WIDTH	HEIGHT		HEAD	JAMB	SILL				
A	W1	FRP	8'-8"	3'-4"	8'-0"	1/A-7	5/A-7	8/A-7	/	/		A
B	W1	FRP	4'-0"	3'-4"	8'-0"	1/A-7	5/A-7	8/A-7	/	/		A

REMARKS
1. NONE

DOOR TYPES

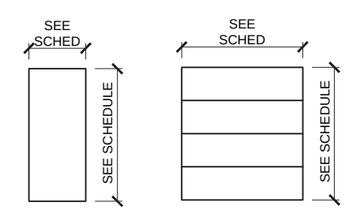

A
FLUSH

B
FLUSH

FRAME TYPES

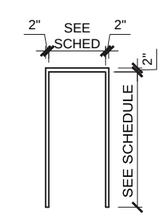

F1
2"x5 3/4"
DOUBLE RABBET

WINDOW TYPES

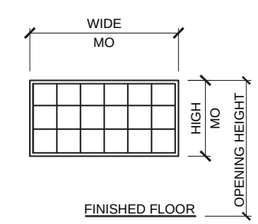

W1
TRANSLUCENT PANEL WINDOWS w/ PREFINISHED ALUMINUM FRAME

PROJECT NO.: 00616135	SCALE: AS SHOWN	NO.	DATE	REVISION	BY
PROJECT DATE: 1-10-2020	DRAWN BY: JFB	.	.	.	.
F.B. : .	CHECKED BY: AJS	.	.	.	.
.	.	.	.	.	.

PLOT DATE: 1/14/20, P:\610s\616\00616135\CADD\Construction Drawings\4-Architectural\A6.0 SCEDULES.dwg

I HEREBY CERTIFY THAT THIS PLAN, REPORT, OR SPECIFICATION WAS PREPARED BY ME OR UNDER MY DIRECT SUPERVISION AND THAT I AM A DULY LICENSED ARCHITECT AND PROFESSIONAL ENGINEER UNDER THE LAWS OF THE STATE OF MINNESOTA.

1/10/2020 Date | 20405 License No.

ALLEN J. SZYMANSKI

MSA
ENGINEERING | ARCHITECTURE | SURVEYING
FUNDING | PLANNING | ENVIRONMENTAL
332 W Superior Street, Duluth MN 55802
(218) 722-3915 www.msa-ps.com
© MSA Professional Services, Inc.

LIFT STATION 15 RELOCATION
CITY OF DULUTH, MINNESOTA
2114 W MICHIGAN STREET

DETAILS & SCHEDULES

FILE NO. 00616135
SHEET A-8

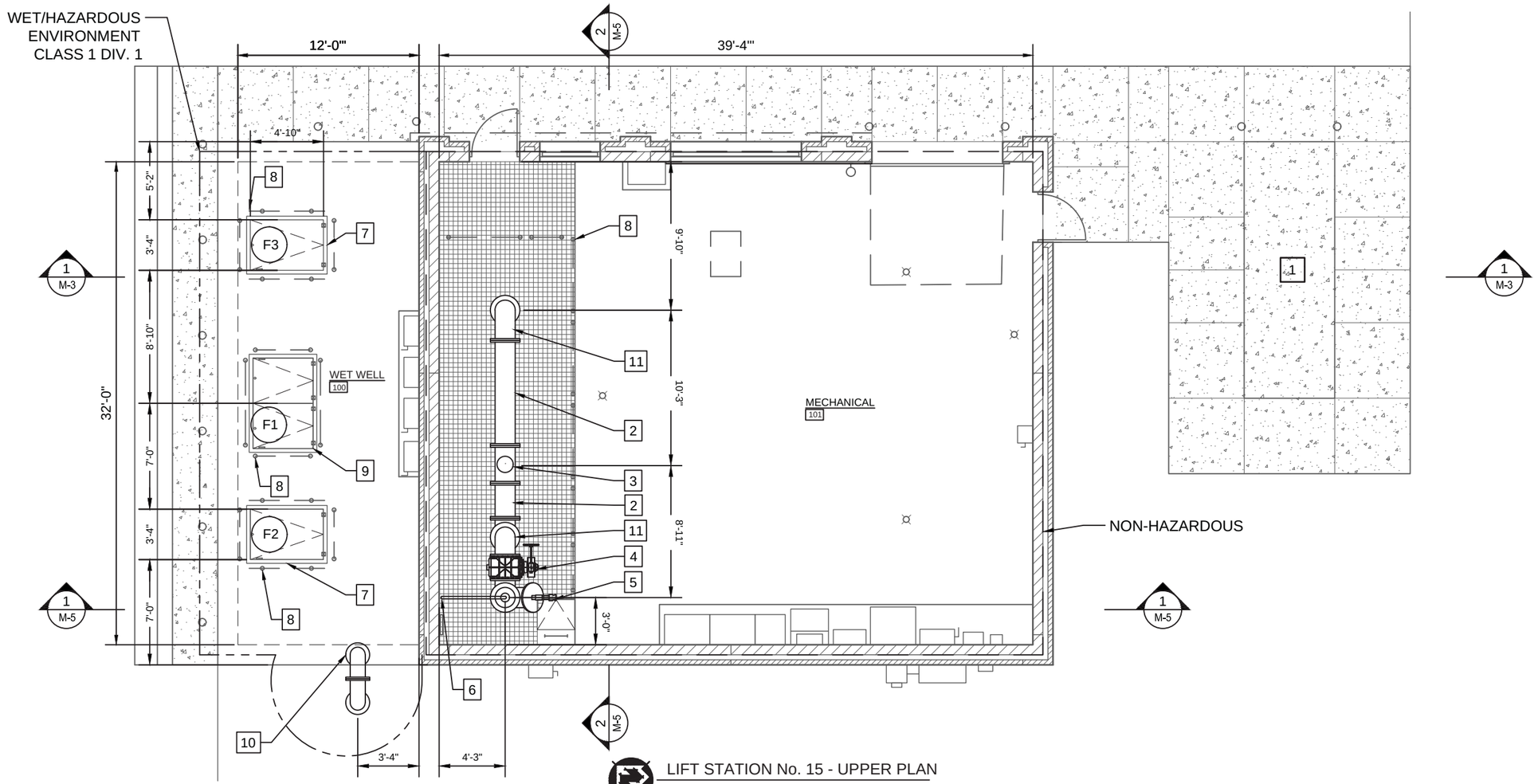

LIFT STATION No. 15 - UPPER PLAN

0 2 4 8

GENERAL NOTES

1. DIP PIPE BELOW GRADE IS TO BE ZINC COATED WITH V-BIO POLYETHYLENE ENCASEMENT PER DULUTH STANDARDS.
2. REFER TO 3/M-7 FOR HATCH AND OPENING SCHEDULE (F1, F2, AND F3).

KEYNOTES

1. INSTALL NG-FUELED STAND-BY GENERATOR FURNISHED BY OWNER (REFER TO DIV. 26)
2. PROVIDE 16" FL X FL DIP SPOOL
3. PROVIDE 16" FL MAGNETIC FLOW METER REFER TO DIV. 26
4. PROVIDE 16" FL PLUG VALVE WITH GEAR ACTUATOR AND HAND WHEEL
5. PROVIDE 16" BLIND FLANGE WITH 4" NPT, SS PIPE, 4" SS BALL VALVE, SS 45° BEND & QUICK COUPLE WITH CAP
6. PROVIDE 2" SS VENT PIPE THROUGH FLOOR TO WET WELL, SUPPORT TO WALL
7. PROVIDE HATCH WITH 40" W X 58" L CLEAR OPENING W/SAFETY GRATING FOR P1 & P2 (REFER 3/M-7)
8. REMOVABLE SAFETY HANDRAIL (PROVIDED BY OTHER NOT IN CONTRACT)
9. PROVIDE HATCH WITH 48" W X 72" L CLEAR OPENING, DOUBLE DOORS & SAFETY GRATING (REFER 3/M-7)
10. PROVIDE 12" PAINTED TANK VENT (REFER 3/M-8)
11. PROVIDE 16" FL 90°BENDS

PROJECT NO.: 616135	SCALE: AS SHOWN	NO.	DATE	REVISION	BY
PROJECT DATE: ---	DRAWN BY: AK	1	1/15	KICK OFF MEETING	SRC
F.B.: .	CHECKED BY: SRC	.	.	.	.
.	.	.	.	.	.

PLOT DATE: 1/14/20, P:\610s\616\00616135\CADD\Construction Drawings\5-Mechanical\00616135 Process Mechanical Upper Plan.dwg

I HEREBY CERTIFY THAT THIS PLAN, REPORT, OR SPECIFICATION WAS PREPARED BY ME OR UNDER MY DIRECT SUPERVISION AND THAT I AM A DULY LICENSED PROFESSIONAL ENGINEER UNDER THE LAWS OF THE STATE OF MINNESOTA.

1/10/2020 Date — 44287 License No.

SCOTT R CHILSON

MSA
ENGINEERING | ARCHITECTURE | SURVEYING
FUNDING | PLANNING | ENVIRONMENTAL
332 W Superior Street, Duluth MN 55802
(218) 722-3915 www.msa-ps.com
© MSA Professional Services, Inc.

LIFT STATION 15 RELOCATION
CITY OF DULUTH, MINNESOTA
2114 W MICHIGAN STREET

PROCESS MECHANICAL UPPER PLAN

FILE NO. 00616135

SHEET M-1

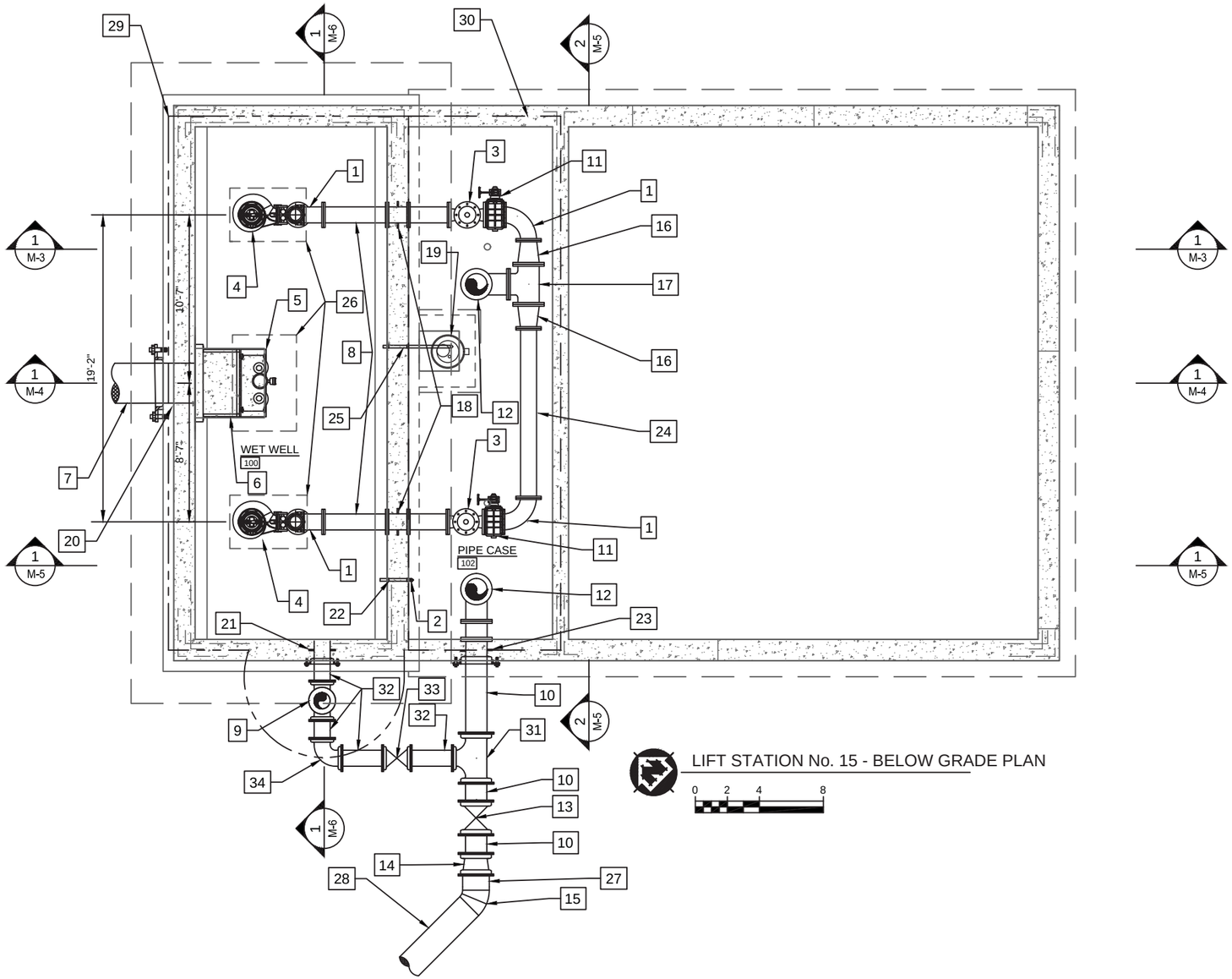

LIFT STATION No. 15 - BELOW GRADE PLAN

0 2 4 8

GENERAL NOTES

1. DIP PIPE BELOW GRADE IS TO BE ZINC COATED WITH V-BIO POLYETHYLENE ENCASEMENT PER DULUTH STANDARDS
2. PIPE SUPPORTS IN WET WELL ARE SS. PIPE SUPPORTS OUTSIDE OF WET WELL ARE TO BE PAINTED. REFER TO DIV.9.

KEYNOTES

1. PROVIDE 12" FL LONG RADIUS 90° BEND
2. PROVIDE 2" SS VENT TO WET WELL
3. PROVIDE 12" FL FLEX CHECK VALVE WITH SPRING ASSIST AND MANUAL ACTUATORS
4. INSTALL OWNER FURNISHED 8" SUBMERSIBLE PUMP, PROVIDE GUIDE RAIL SYSTEM AND LIFT CHAINS (REFER 1/M-7)
5. INSTALL RAW WASTEWATER GRINDER (REFER 2/M-4) FURNISHED BY OWNER
6. PROVIDE STAINLESS STEEL GRINDER GUIDE RAILS AND TRASH RACK (REFER 1/M-4)
7. PROVIDE INFLUENT SEWER, 30" PC 350 DIP REFER TO CIVIL DRAWINGS.
8. PROVIDE 12" FL DIP SPOOL PIPE
9. PROVIDE 12" MJ TEE W/ TANK VENT (REFER 3/M-8)
10. PROVIDE RESTRAINED 16" MJ PC 350 DIP
11. PROVIDE 12" FL PLUG VALVE WITH GEAR ACTUATOR AND HAND WHEEL
12. PROVIDE 16" FL LONG RADIUS 90° BASE BEND
13. PROVIDE RESTRAINED 16" MJ GATE VALVE WITH VALVE BOX
14. PROVIDE RESTRAINED 20" X 16" MJ DIP REDUCER
15. PROVIDE 20" FABRICATED HDPE 45° BEND, PC 130
16. PROVIDE 16" X 12" FL REDUCER
17. PROVIDE 16" FL TEE
18. PROVIDE 12" FL X FL WALL PIPE (REFER 4/M-8)
19. PROVIDE SEWAGE EJECTOR PUMP SYSTEM (REFER 4/M-7)
20. PROVIDE 30" PE X MJ WALL PIPE (REFER 5/M-8)
21. PROVIDE 12" MJ X PE WALL PIPE (REFER 5/M-8)
22. PROVIDE 2" NPT WALL PIPE (REFER 2/M-8)
23. PROVIDE 16" FL X MJ WALL PIPE (REFER 5/M-8)
24. PROVIDE 12" FL X FL DIP SPOOL PIPE
25. PROVIDE 2" NPT X NPT SS WALL PIPE
26. HATCH OPENING SHOWN
27. PROVIDE 20" HDPE X MJ ADAPTOR
28. PROVIDE 20" HDPE, PC 130, SDR 17
29. WET/HAZARDOUS ENVIRONMENT, CLASS 1, DIVISION 1
30. NON-HAZARDOUS ENVIRONMENT
31. PROVIDE 16" X 16" X 12" MJ TEE
32. PROVIDE RESTRAINED 12" MJ PC 350 DIP
33. PROVIDE RESTRAINED 12" MJ GATE VALVE W/ VALVE BOX
34. PROVIDE RESTRAINED 12" 90° MJ BEND

PROJECT NO.: 616135	SCALE: AS SHOWN	NO.	DATE	REVISION	BY
PROJECT DATE: ---	DRAWN BY: AK	1	1/15	KICK OFF MEETING	SRC
F.B.: .	CHECKED BY: SRC	.	.	.	.
.	.	.	.	.	.

PLOT DATE: 1/14/20, P:\610s\616\00616135\CADD\Construction Drawings\5-Mechanical\00616135 Process Mechanical Lower Plan.dwg

I HEREBY CERTIFY THAT THIS PLAN, REPORT, OR SPECIFICATION WAS PREPARED BY ME OR UNDER MY DIRECT SUPERVISION AND THAT I AM A DULY LICENSED PROFESSIONAL ENGINEER UNDER THE LAWS OF THE STATE OF MINNESOTA.

1/10/2020 Date — 44287 License No.

SCOTT R CHILSON

MSA

ENGINEERING | ARCHITECTURE | SURVEYING
FUNDING | PLANNING | ENVIRONMENTAL
332 W Superior Street, Duluth MN 55802
(218) 722-3915 www.msa-ps.com

© MSA Professional Services, Inc.

LIFT STATION 15 RELOCATION
CITY OF DULUTH, MINNESOTA
2114 W MICHIGAN STREET

PROCESS MECHANICAL LOWER PLAN

FILE NO. 00616135

SHEET M-2

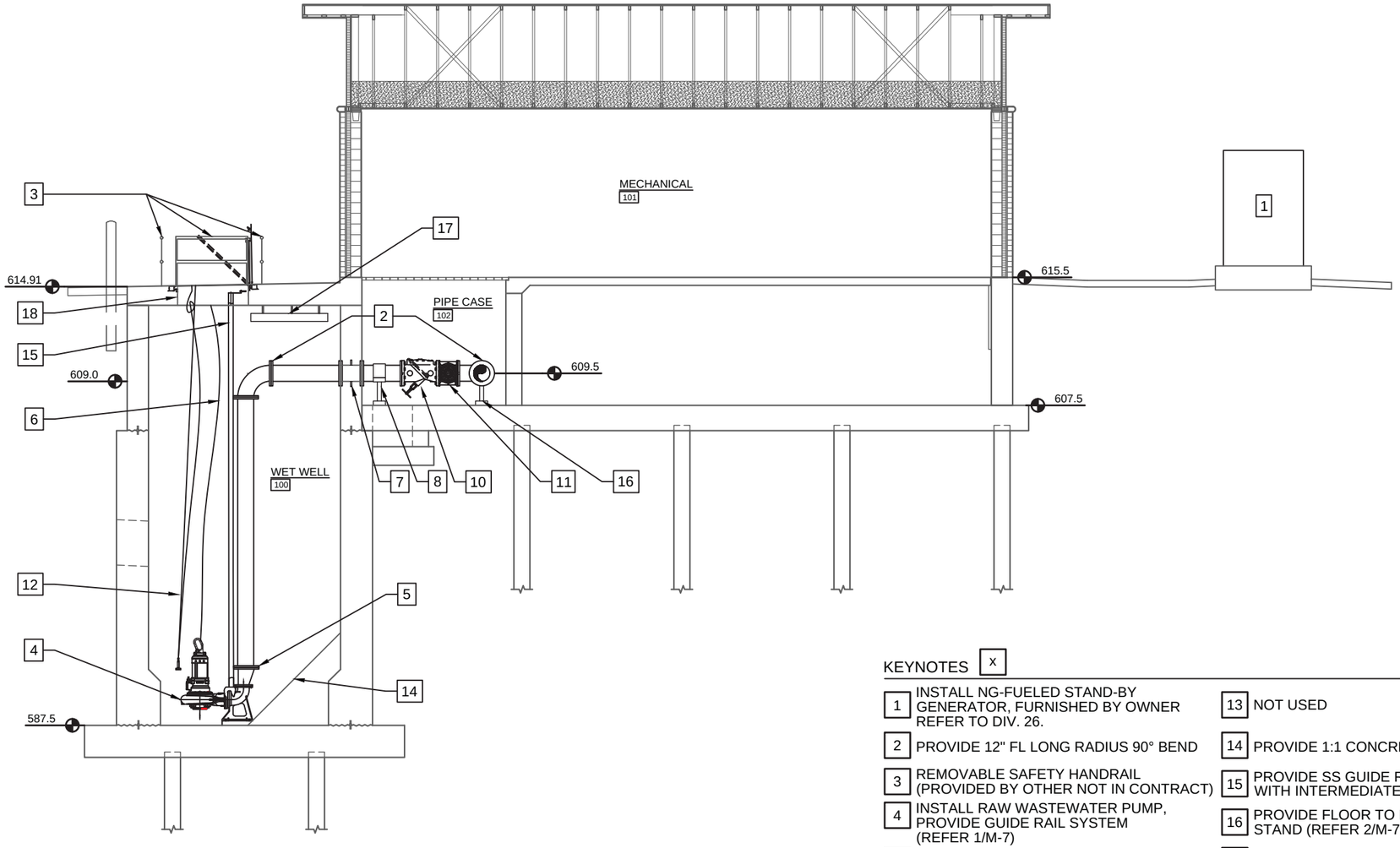

1 M-3 LIFT STATION No. 15 - SECTION

0 2 4 8

GENERAL NOTES

1. DIP PIPE BELOW GRADE IS TO BE ZINC COATED WITH V-BIO POLYETHYLENE ENCASEMENT PER DULUTH STANDARDS.
2. PIPE SUPPORTS IN WET WELL ARE SS. PIPE SUPPORTS OUTSIDE OF WET WELL ARE TO BE PAINTED. REFER TO DIV.9.

KEYNOTES X

1. INSTALL NG-FUELED STAND-BY GENERATOR, FURNISHED BY OWNER REFER TO DIV. 26.
2. PROVIDE 12" FL LONG RADIUS 90° BEND
3. REMOVABLE SAFETY HANDRAIL (PROVIDED BY OTHER NOT IN CONTRACT)
4. INSTALL RAW WASTEWATER PUMP, PROVIDE GUIDE RAIL SYSTEM (REFER 1/M-7)
5. PROVIDE 12" X 8" FL ECC REDUCER
6. INSTALL SUBMERSIBLE PUMP CABLES
7. PROVIDE 12" FL X FL WALL PIPE (REFER 4/M-8)
8. PROVIDE FLOOR TO SADDLE PIPE STAND (PER 2/M-7)
9. NOT USED
10. PROVIDE 12" FL FLEX CHECK VALVE WITH SPRING ASSIST AND MANUAL ACTUATORS
11. PROVIDE 12" FL PLUG VALVE WITH GEAR ACTUATOR AND HAND WHEEL
12. LEVEL TRANSDUCER - PROVIDE THE FOLLOWING SET POINTS
    HWL (PUMPS ON) = 597.0
    LAG PUMP ON = 596.5
    LEAD PUMP ON = 595.5
    LAG PUMP OFF = 593.0
    PUMPS OFF = 592.0
    LWL = 591.5
13. NOT USED
14. PROVIDE 1:1 CONCRETE FILLET
15. PROVIDE SS GUIDE RAIL SYSTEM WITH INTERMEDIATE SUPPORTS
16. PROVIDE FLOOR TO FLANGE PIPE STAND (REFER 2/M-7)
17. CABLE SLEEVE. REFER TO DIV. 26
18. PROVIDE SS BRACKET WITH HOOKS TO HANG CABLES

PROJECT NO.: 616135	SCALE: AS SHOWN	NO.	DATE	REVISION	BY
PROJECT DATE: ---	DRAWN BY: AK	1	1/15	KICK OFF MEETING	SRC
F.B. : .	CHECKED BY: SRC	.	.	.	.
.	.	.	.	.	.

PLOT DATE: 1/14/20. P:\610s\616\00616135\CADD\Construction Drawings\5-Mechanical\00616135 M-3 Mechanical Section.dwg

I HEREBY CERTIFY THAT THIS PLAN, REPORT, OR SPECIFICATION WAS PREPARED BY ME OR UNDER MY DIRECT SUPERVISION AND THAT I AM A DULY LICENSED PROFESSIONAL ENGINEER UNDER THE LAWS OF THE STATE OF MINNESOTA.

1/10/2020 Date — 44287 License No.

SCOTT R CHILSON

MSA

ENGINEERING | ARCHITECTURE | SURVEYING
FUNDING | PLANNING | ENVIRONMENTAL
332 W Superior Street, Duluth MN 55802
(218) 722-3915 www.msa-ps.com

© MSA Professional Services, Inc.

LIFT STATION 15 RELOCATION
CITY OF DULUTH, MINNESOTA
2114 W MICHIGAN STREET

MECHANICAL SECTION

FILE NO. 00616135

SHEET M-3

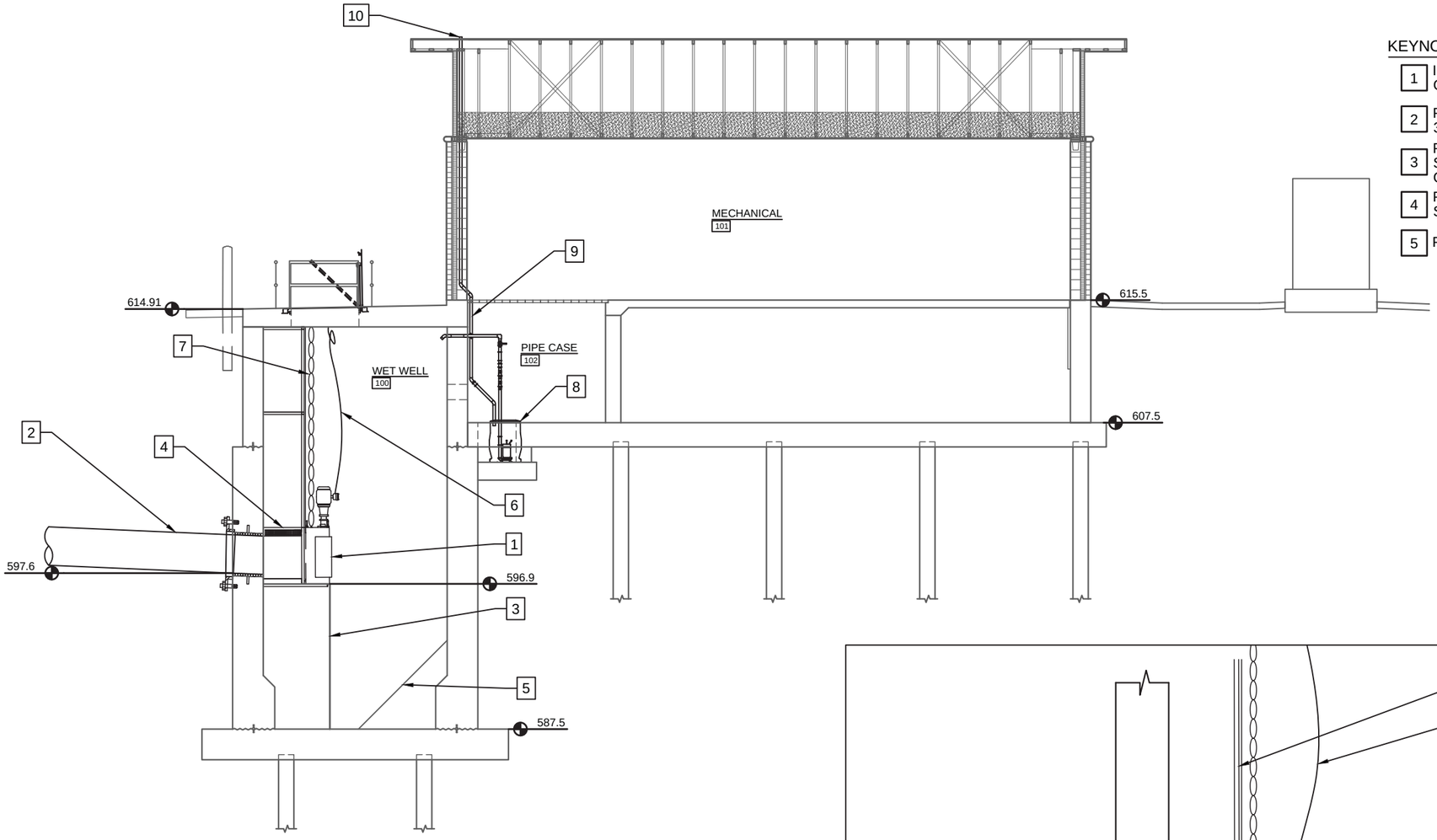

1 M-4 LIFT STATION No. 15 - SECTION

0 2 4 8

KEYNOTES x

1. INSTALL RAW WASTEWATER GRINDER, FURNISHED BY OWNER
2. PROVIDE INFLUENT SEWER, 30" PC 350 DIP
3. PROVIDE CONCRETE COLUMN SUPPORTING RAW WASTEWATER GRINDER
4. PROVIDE WASTEWATER GUIDE RAIL SYSTEM AND MOUNTING BRACKET
5. PROVIDE 1:1 CONCRETE FILLET
6. INSTALL OWNER FURNISHED GRINDER POWER CABLE
7. PROVIDE SS LIFTING CHAIN
8. SUMP PUMP SYSTEM (REFER 4/M-7)
9. SUMP PUMP VENT THROUGH ROOF (REFER 4/M-7)
10. VENT TO BE ROUTED TO HIGHEST POINT ON ROOF (REFER TO ARCHITECTURAL FOR ADDITIONAL INFORMATION)

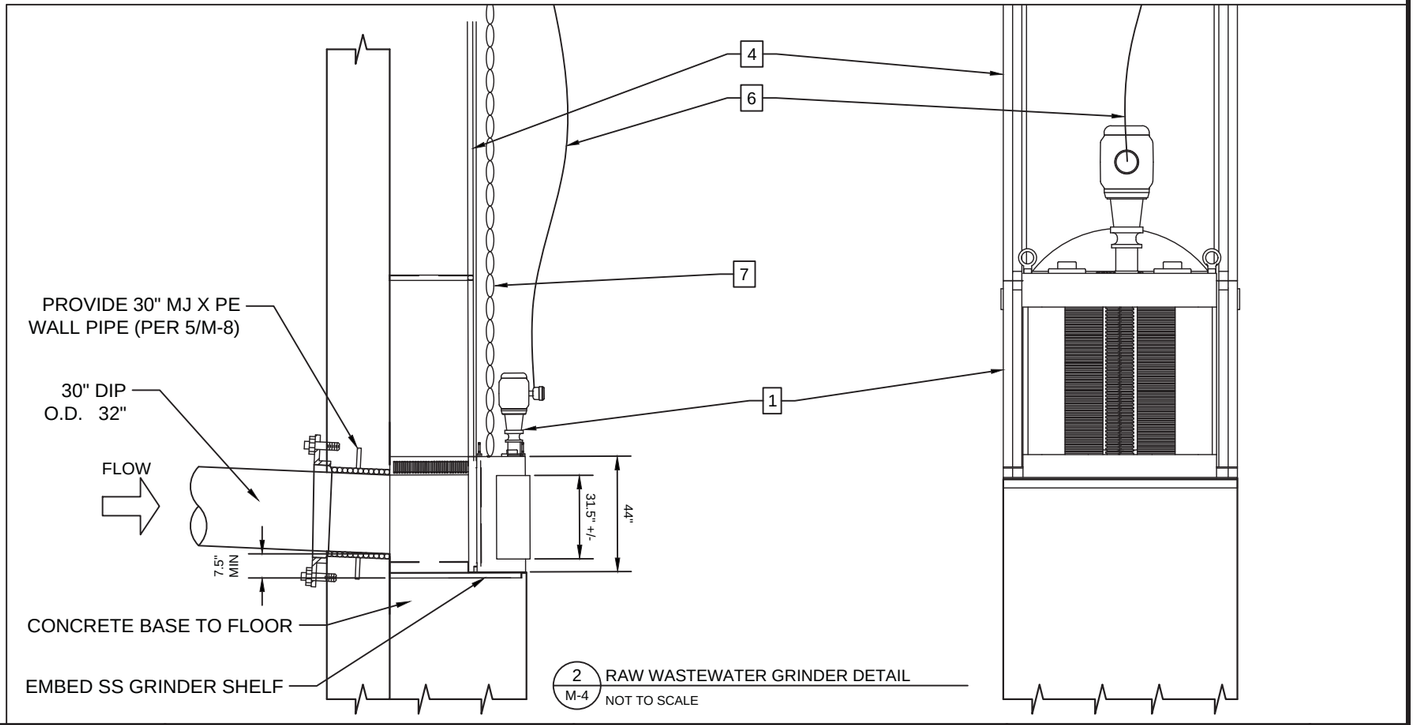

2 M-4 RAW WASTEWATER GRINDER DETAIL

NOT TO SCALE

GENERAL NOTES

1. DIP PIPE BELOW GRADE IS TO BE ZINC COATED WITH V-BIO POLYETHYLENE ENCASEMENT PER DULUTH STANDARDS.
2. PIPE SUPPORTS IN WET WELL ARE SS. PIPE SUPPORTS OUTSIDE OF WET WELL ARE TO BE PAINTED. REFER TO DIV.9.

PROJECT NO.: 616135	SCALE: AS SHOWN	NO.	DATE	REVISION	BY
PROJECT DATE: ---	DRAWN BY: AK	1	1/15	KICK OFF MEETING	SRC
F.B.: .	CHECKED BY: SRC	.	.	.	.
.	.	.	.	.	.

PLOT DATE: 1/14/20, P:\610s\616\00616135\CADD\Construction Drawings\5-Mechanical\00616135 M-4 Mechanical Section.dwg

I HEREBY CERTIFY THAT THIS PLAN, REPORT, OR SPECIFICATION WAS PREPARED BY ME OR UNDER MY DIRECT SUPERVISION AND THAT I AM A DULY LICENSED PROFESSIONAL ENGINEER UNDER THE LAWS OF THE STATE OF MINNESOTA.

1/10/2020 Date — 44287 License No.

SCOTT R CHILSON

MSA

ENGINEERING | ARCHITECTURE | SURVEYING
FUNDING | PLANNING | ENVIRONMENTAL
332 W Superior Street, Duluth MN 55802
(218) 722-3915 www.msa-ps.com

© MSA Professional Services, Inc.

LIFT STATION 15 RELOCATION
CITY OF DULUTH, MINNESOTA
2114 W MICHIGAN STREET

MECHANICAL SECTION

FILE NO. 00616135

SHEET M-4

GENERAL NOTES

1. DIP PIPE BELOW GRADE IS TO BE ZINC COATED WITH V-BIO POLYETHYLENE ENCASEMENT PER DULUTH STANDARDS.
2. PIPE SUPPORTS IN WET WELL ARE SS. PIPE SUPPORTS OUTSIDE OF WET WELL ARE TO BE PAINTED. REFER TO DIV.9.

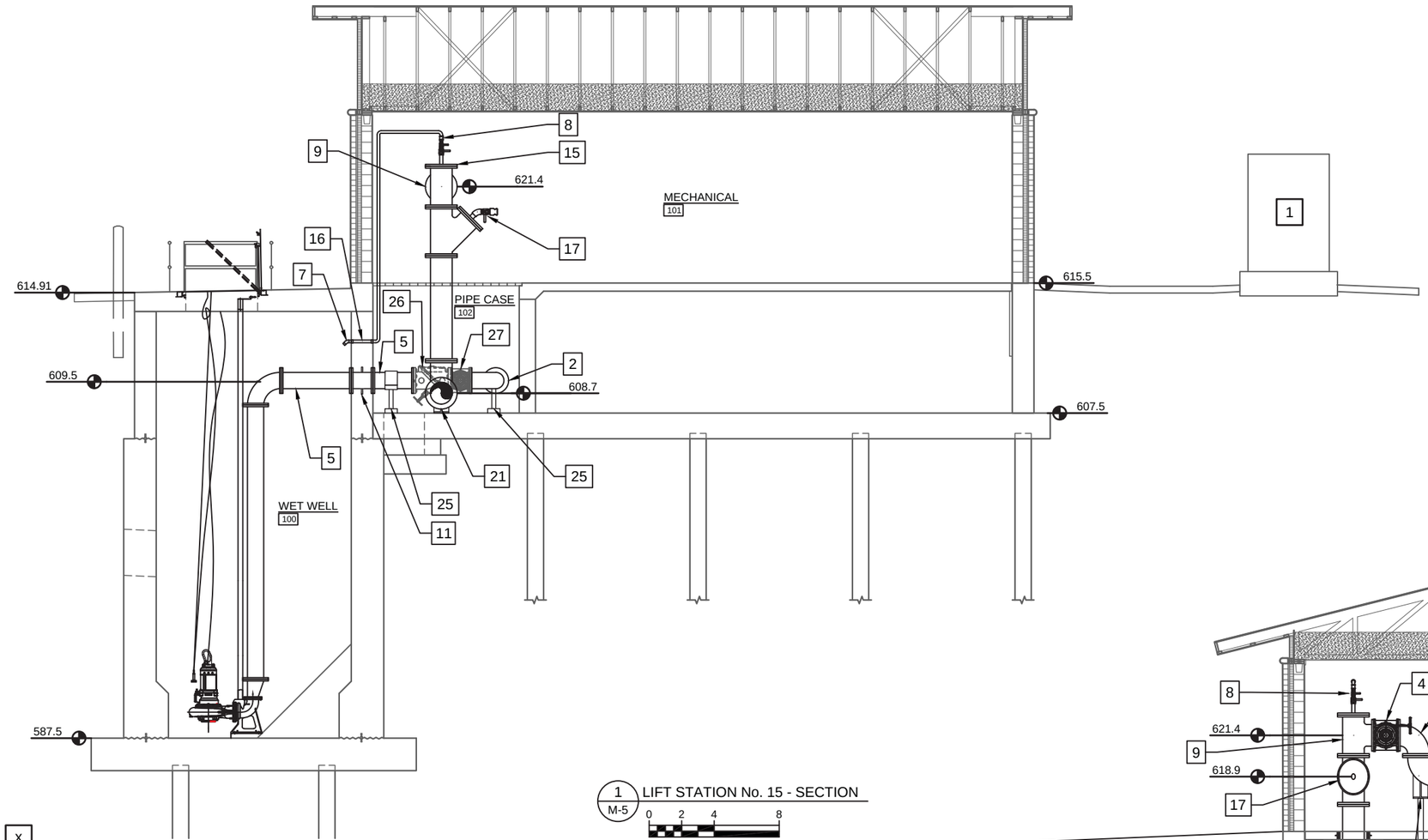

1 M-5 LIFT STATION No. 15 - SECTION

0 2 4 8

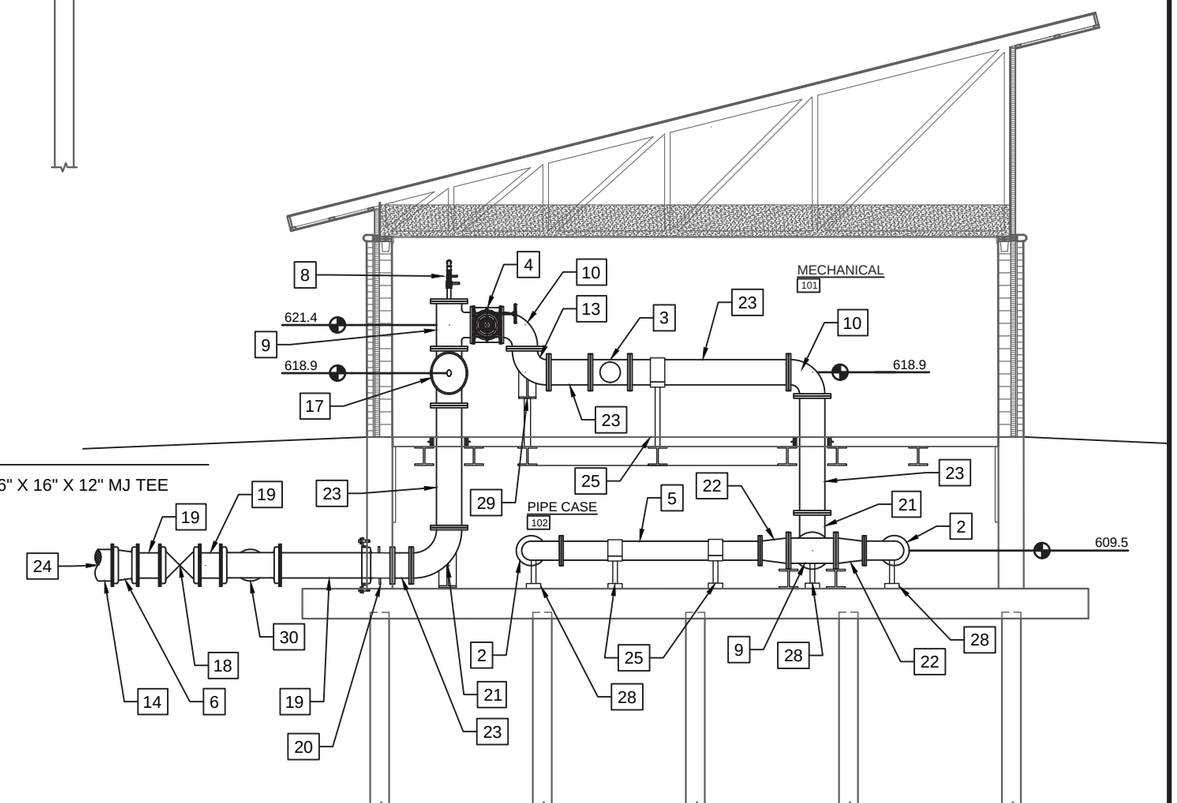

2 M-5 LIFT STATION No. 15 - SECTION

0 2 4 8

KEYNOTES X

1. INSTALL NG-FUELED STAND-BY GENERATOR. REFER TO DIV. 26
2. PROVIDE 12" FL LONG RADIUS 90° BEND
3. PROVIDE 16" FL MAGNETIC FLOW METER (REFER TO ELECTRICAL)
4. PROVIDE 16" FL PLUG VALVE
5. PROVIDE 12" FL X FL DIP SPOOL PIPE
6. PROVIDE 16" X 20" MJ DIP REDUCER
7. PROVIDE 2" SS 45° BEND
8. PROVIDE 2" SS PIPING TO WET WELL (REFER 1/M-8)
9. PROVIDE 16" X 16" X 16" FL TEE
10. PROVIDE 16" FL 90° BENDS
11. PROVIDE 12" FL X FL WALL PIPE (REFER 4/M-8)
12. NOT USED
13. PROVIDE 16" FL BASE ELBOW
14. PROVIDE 20" HDPE X MJ ADAPTER
15. PROVIDE 16" BLIND FLANGE TAPPED FOR 2" NPT.
16. PROVIDE 2" SS WALL PIPE PENETRATION (REFER 2/M-8)
17. PROVIDE 16" BLIND FLANGE TAPPED FOR 4" NPT, 4" SS PIPE, 4" SS 45° BEND, 4" SS BALL VALVE & QUICK COUPLE WITH CAP
18. PROVIDE 16" MJ GATE VALVE W/ VALVE AND BOX
19. PROVIDE RESTRAINED 16" DIP
20. PROVIDE 16" FL X MJ WALL PIPE (REFER 5/M-8)
21. PROVIDE 16" FL LONG RADIUS 90° BASE BEND
22. PROVIDE 16" X 12" FL REDUCER
23. PROVIDE 16" FL X FL DIP SPOOL PIPE
24. CONTINUE TO HDPE BEND AND PIPE (REFER 1/M-2)
25. PROVIDE FLOOR TO SADDLE PIPE STAND (REFER 2/M-7)
26. PROVIDE 12" FL FLEX CHECK VALVE WITH SPRING ASSIST AND MANUAL ACTUATORS
27. PROVIDE 12" FL PLUG VALVE WITH GEAR ACTUATORS AND HAND WHEEL
28. PROVIDE FLOOR TO FLANGE PIPE STAND (REFER 2/M-7)
29. PROVIDE BASE FITTING EXTENSION SUPPORT (REFER 5/M-7)
30. PROVIDE 16" X 16" X 12" MJ TEE FOR DRAIN

PROJECT NO.: 616135	SCALE: AS SHOWN	NO.	DATE	REVISION	BY
PROJECT DATE: ---	DRAWN BY: AK	1	1/15	KICK OFF MEETING	SRC
F.B. : .	CHECKED BY: SRC	.	.	.	.
.	.	.	.	.	.

PLOT DATE: 1/14/20, P:\610s\616\00616135\CADD\Construction Drawings\5-Mechanical\00616135 M-5 Mechanical Section.dwg

I HEREBY CERTIFY THAT THIS PLAN, REPORT, OR SPECIFICATION WAS PREPARED BY ME OR UNDER MY DIRECT SUPERVISION AND THAT I AM A DULY LICENSED PROFESSIONAL ENGINEER UNDER THE LAWS OF THE STATE OF MINNESOTA.

1/10/2020 Date — 44287 License No.

SCOTT R CHILSON

MSA

ENGINEERING | ARCHITECTURE | SURVEYING
FUNDING | PLANNING | ENVIRONMENTAL
332 W Superior Street, Duluth MN 55802
(218) 722-3915 www.msa-ps.com

© MSA Professional Services, Inc.

LIFT STATION 15 RELOCATION
CITY OF DULUTH, MINNESOTA
2114 W MICHIGAN STREET

MECHANICAL SECTION

FILE NO. 00616135

SHEET M-5

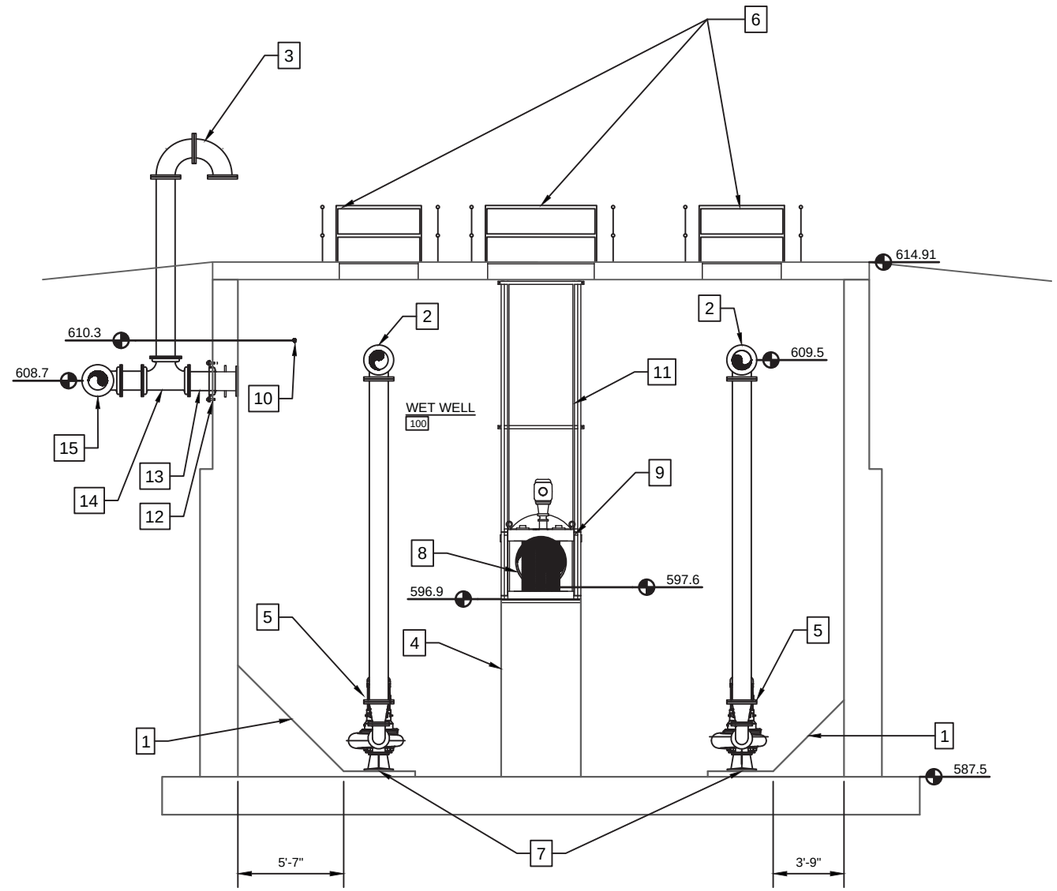

1 / M-6 LIFT STATION No. 15 - SECTION

0 2 4 8

KEYNOTES X

1. PROVIDE 1:1 CONCRETE FILLET
2. PROVIDE 12" FL LONG RADIUS 90° BEND
3. PROVIDE 12" PAINTED VENT (REFER 3/M-8)
4. INSTALL CONCRETE SLAB SUPPORTING RAW WASTEWATER GRINDER
5. PROVIDE 12" X 8" FL ECC REDUCER
6. REMOVABLE SAFETY HANDRAIL (PROVIDED BY OTHER NOT IN CONTRACT)
7. INSTALL RAW WASTEWATER PUMP (REFER 1/M-7) FURNISHED BY OWNER, PROVIDE GUIDE RAIL SYSTEM
8. INSTALL RAW WASTEWATER GRINDER (REFER 2/M-4). FURNISHED BY OWNER
9. PROVIDE INFLUENT SEWER, 30" RCP
10. 2" AIR RELEASE PIPING DISCHARGE INTO WET WELL
11. PROVIDE RAW WASTEWATER GRINDER GUIDE RAIL AND BRACKET
12. PROVIDE 12" MJ X PE WALL PIPE (REFER 5/M-8)
13. PROVIDE RESTRAINED 12" MJ PC 350 DIP
14. PROVIDE 12" MJ TEE W/ TANK VENT (REFER 3/M-8)
15. PROVIDE RESTRAINED 12" 90° MJ BEND

GENERAL NOTES

1. DIP PIPE BELOW GRADE IS TO BE ZINC COATED WITH V-BIO POLYETHYLENE ENCASEMENT PER DULUTH STANDARDS.
2. PIPE SUPPORTS IN WET WELL ARE SS. PIPE SUPPORTS OUTSIDE OF WET WELL ARE TO BE PAINTED. REFER TO DIV.9.

PROJECT NO.: 616135	SCALE: AS SHOWN	NO.	DATE	REVISION	BY
PROJECT DATE: ---	DRAWN BY: AK	1	1/15	KICK OFF MEETING	SRC
F.B.: .	CHECKED BY: SRC	.	.	.	.
.	.	.	.	.	.

PLOT DATE: 1/14/20. P:\610s\616\00616135\CADD\Construction Drawings\5-Mechanical\00616135 M-6 Mechanical Section.dwg

I HEREBY CERTIFY THAT THIS PLAN, REPORT, OR SPECIFICATION WAS PREPARED BY ME OR UNDER MY DIRECT SUPERVISION AND THAT I AM A DULY LICENSED PROFESSIONAL ENGINEER UNDER THE LAWS OF THE STATE OF MINNESOTA.

1/10/2020 Date — 44287 License No.

SCOTT R CHILSON

MSA
ENGINEERING | ARCHITECTURE | SURVEYING
FUNDING | PLANNING | ENVIRONMENTAL
332 W Superior Street, Duluth MN 55802
(218) 722-3915 www.msa-ps.com
© MSA Professional Services, Inc.

LIFT STATION 15 RELOCATION
CITY OF DULUTH, MINNESOTA
2114 W MICHIGAN STREET

MECHANICAL SECTION

FILE NO. 00616135

SHEET M-6

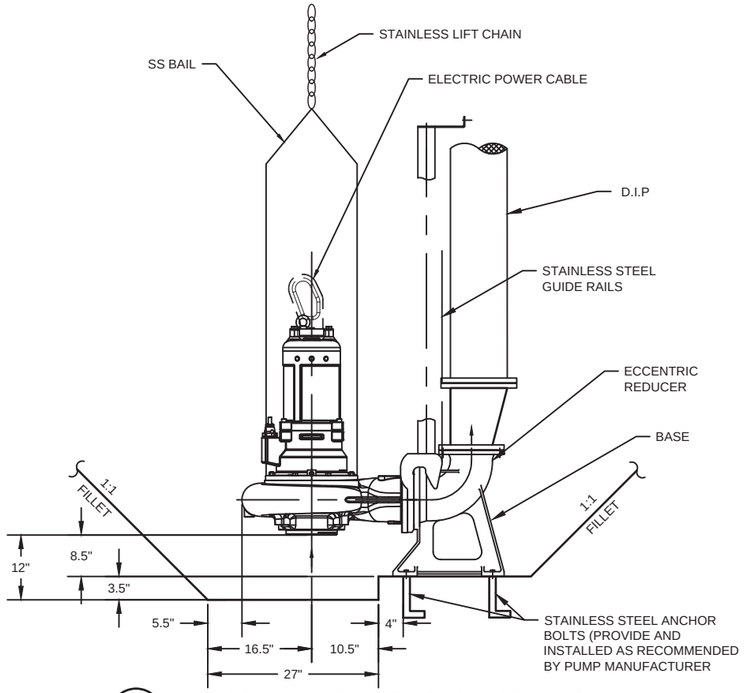

1 M-7 TYPICAL LIFT STATION SUBMERSIBLE PUMP

N.T.S

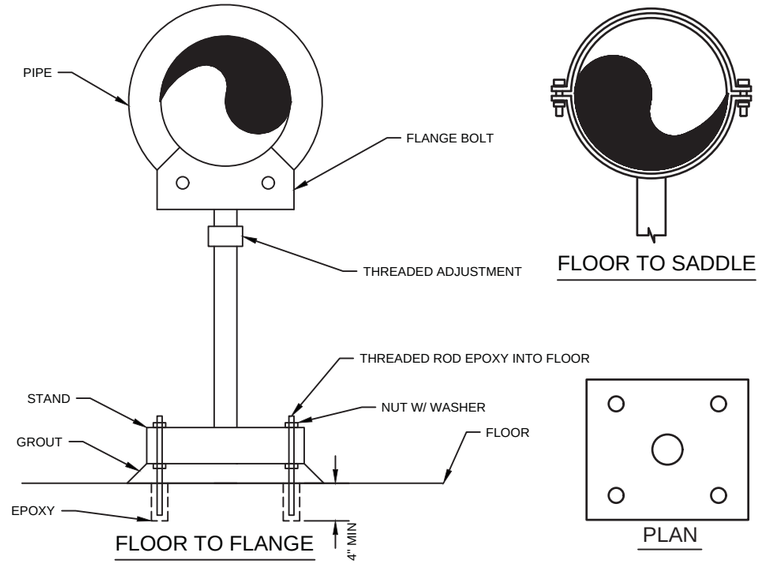

2 M-7 PIPE STAND - TYPICAL DETAIL

N.T.S

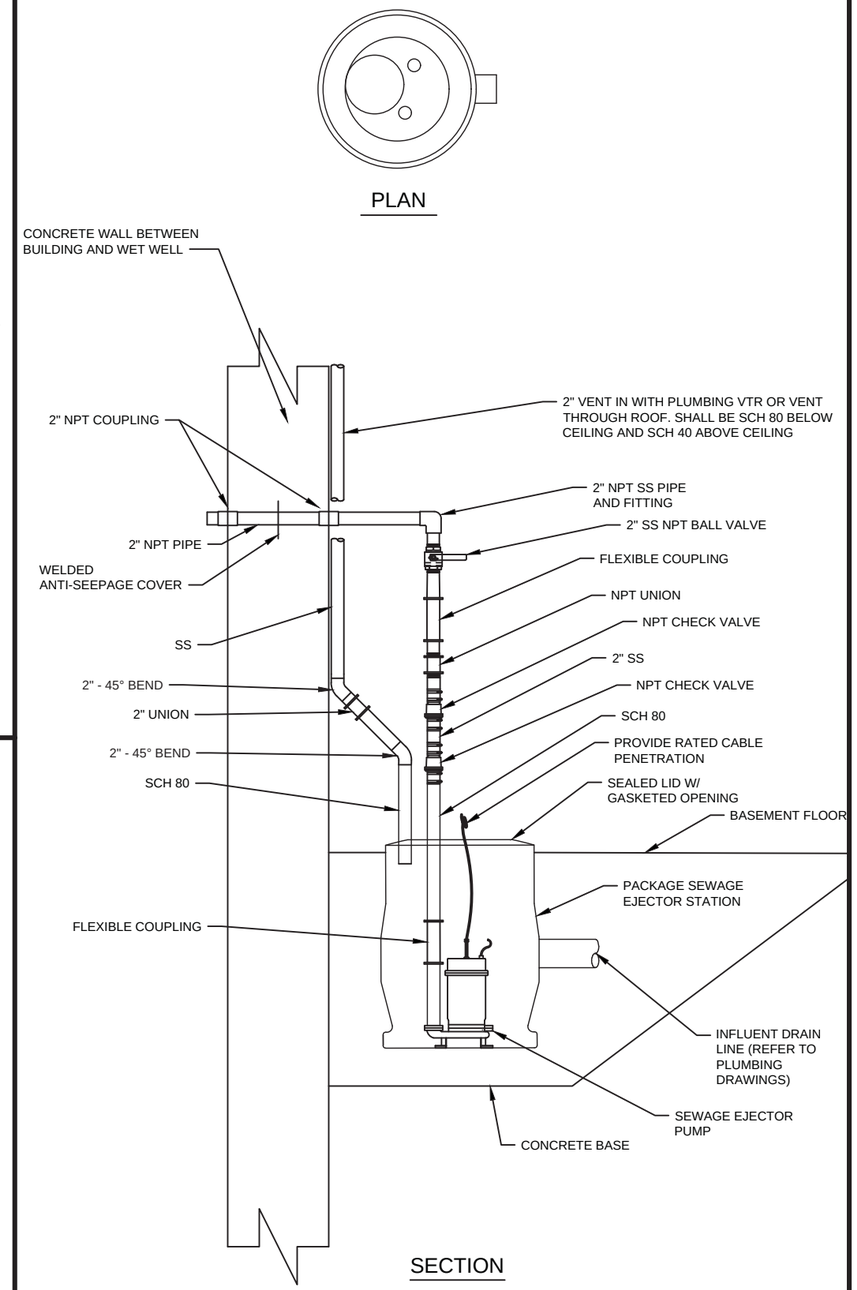

4 M-7 EJECTOR PUMP DETAIL

N.T.S

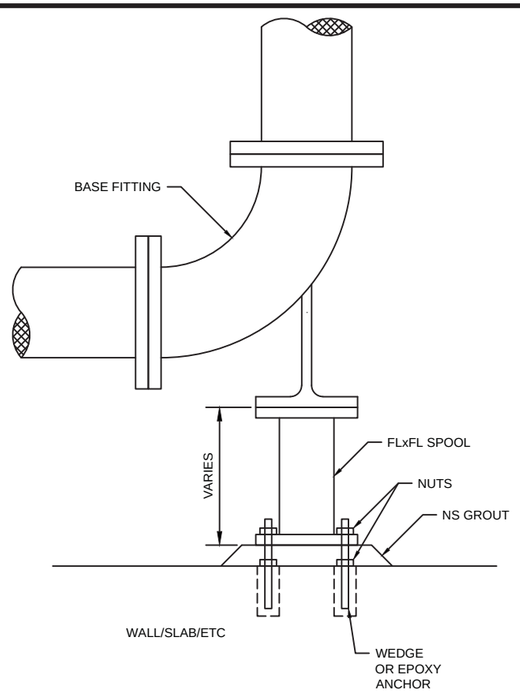

5 M-7 TYPICAL BASE FITTING EXTENSION SUPPORT DETAIL

N.T.S

ACCESS HATCH (VAULT DOORS) SCHEDULE

OPENING NO	LOCATION	MATERIAL	OPENING SIZE		LOCATION	FIRE LABEL	REMARKS	OPENING NO
			LENGTH	WIDTH				
F1	G1	AL	72"	48"	EXTERIOR		1. 2. 3.	F1
F2	P1	AL	58"	40"	EXTERIOR		1. 2. 3.	F2
F3	P2	AL	58"	40"	EXTERIOR		1. 2. 3.	F3

REMARKS:

1. SAFETY GRATING, HINGED SSIDE TO MATCH COVER HATCH, SEE BELOW.
2. CONCEALED PADLOCK HASP.
3. SHALL COMPLY WITH BUY AMERICAN. SEE SPEC.

ACCESS HATCH TYPES

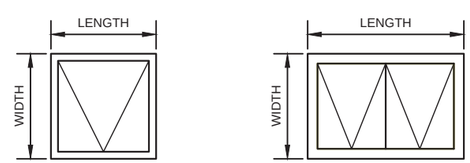

3 M-7 ACCESS HATCH (VAULT DOOR) SCHEDULE

N.T.S

PROJECT NO.: 00616135	SCALE: AS SHOWN	NO.	DATE	REVISION	BY
PROJECT DATE: 1-10-2020	DRAWN BY: -	.	.	.	.
F.B. : .	CHECKED BY: SCR	.	.	.	.
.	.	.	.	.	.

PLOT DATE: 1/14/20, P:\610s\616\00616135\CADD\Construction Drawings\5-Mechanical\00616135 Lift Station Details.dwg

I HEREBY CERTIFY THAT THIS PLAN, REPORT, OR SPECIFICATION WAS PREPARED BY ME OR UNDER MY DIRECT SUPERVISION AND THAT I AM A DULY LICENSED PROFESSIONAL ENGINEER UNDER THE LAWS OF THE STATE OF MINNESOTA.

1/10/2020 Date — 44287 License No.

SCOTT R CHILSON

MSA

ENGINEERING | ARCHITECTURE | SURVEYING
FUNDING | PLANNING | ENVIRONMENTAL
332 W Superior Street, Duluth MN 55802
(218) 722-3915 www.msa-ps.com

© MSA Professional Services, Inc.

LIFT STATION 15 RELOCATION
CITY OF DULUTH, MINNESOTA
2114 W MICHIGAN STREET

LIFT STATION DETAILS

FILE NO. 00616135

SHEET M-7

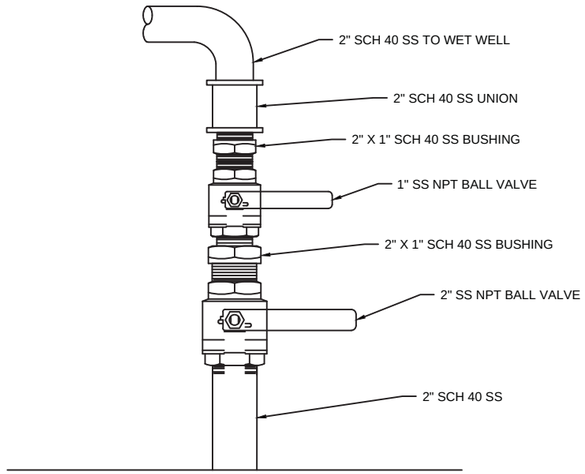

1 / M-8 2" SS SYSTEM VENT - TYPICAL DETAIL

NO SCALE

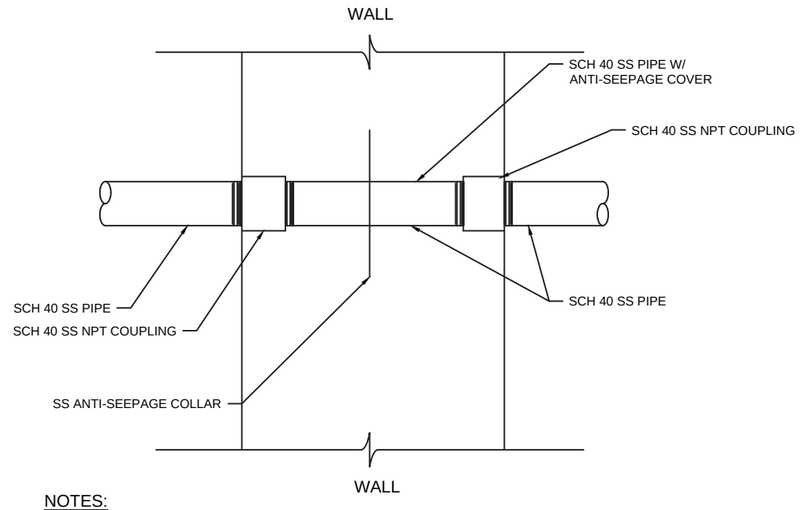

NOTES:

1) SIZE SHALL VARY PER PIPING AND LOCATION

2 / M-8 SS WALL PIPE PENETRATION - TYPICAL DETAIL

NO SCALE

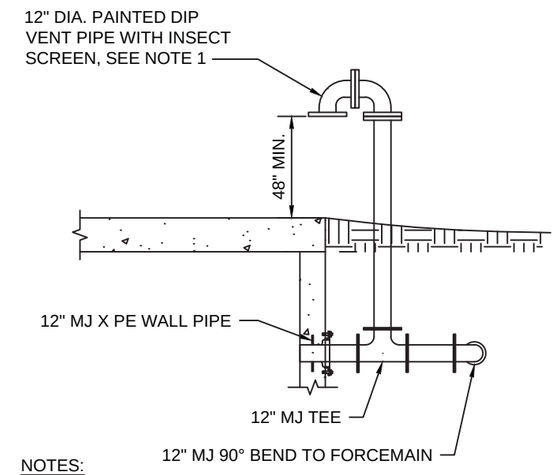

NOTES:

1) FLANGE ON VENT TUBE BASE SHALL BE BOLTED TO CONCRETE COVER WITH 5/8" STAINLESS STEEL EXP. BOLTS (TYP.) PROVIDE NEOPREM GASKET.

3 / M-8 TANK VENT - TYPICAL DETAIL

NO SCALE

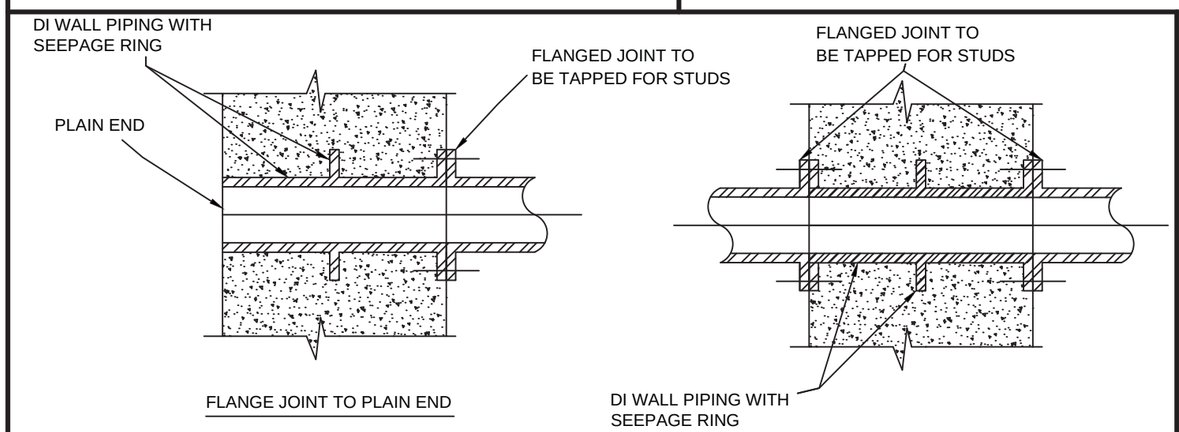

NOTES:
ALL ENDS SHALL BE FLANGED
UNLESS INDICATED ON PLANS.

4 / M-8 FLANGE JOINT PIPE PENETRATION - TYPICAL DETAIL

NO SCALE

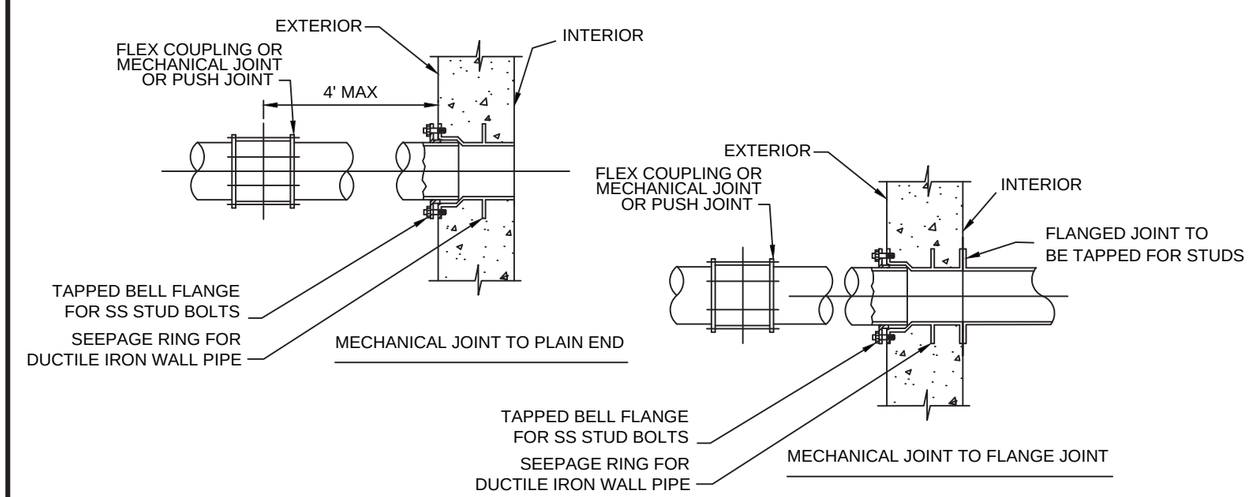

5 / M-8 MECHANICAL JOINT PIPE PENETRATION - TYPICAL DETAIL

NO SCALE

PROJECT NO.:	00616135	SCALE: AS SHOWN	NO.	DATE	REVISION	BY
PROJECT DATE:	1-10-2020	DRAWN BY: -	.	.	.	.
F.B. :	.	CHECKED BY: SCR	.	.	.	.
.		.	.	.	.	.

PLOT DATE: 1/14/20, P:\610s\616\00616135\CADD\Construction Drawings\S-Mechanical\00616135 Typical Details.dwg

I HEREBY CERTIFY THAT THIS PLAN, REPORT, OR SPECIFICATION WAS PREPARED BY ME OR UNDER MY DIRECT SUPERVISION AND THAT I AM A DULY LICENSED PROFESSIONAL ENGINEER UNDER THE LAWS OF THE STATE OF MINNESOTA.

1/10/2020 Date — 44287 License No.

SCOTT R CHILSON

MSA

ENGINEERING | ARCHITECTURE | SURVEYING
FUNDING | PLANNING | ENVIRONMENTAL
332 W Superior Street, Duluth MN 55802
(218) 722-3915 www.msa-ps.com

© MSA Professional Services, Inc.

LIFT STATION 15 RELOCATION
CITY OF DULUTH, MINNESOTA
2114 W MICHIGAN STREET

TYPICAL DETAILS

FILE NO. 00616135

SHEET M-8

ABBREVIATIONS

A/E	ARCHITECT / ENGINEER
AD	AREA DRAIN
ACW	AUTOMATIC CLOTHES WASHER
AFF	ABOVE FINISH FLOOR
AFG	ABOVE FINISH GRADE
AG	AIR GAP
AP	ACCESS PANEL
AS	AUTOMATIC SPRINKLER
ASD	ADJUSTABLE SPEED DRIVES
ASD	AUTOMATIC SPRINKLER DRAIN
ASME	AMERICAN SOCIETY MECHANICAL ENGINEERS
ASPE	AMERICAN SOCIETY PLUMBING ENGINEERS
ASR	AUTOMATIC SPRINKLER RISER
AV	ACID VENT
AW	ACID WASTE
BFP	REDUCED PRESSURE BACKFLOW PREVENTER
BHP	BREAK HORSEPOWER
BSP	BLACK STEEL PIPE
BT	BATHTUB
BTU	BRITISH THERMAL UNIT
BTUH	BRITISH THERMAL UNIT PER HOUR
C	CELSIUS
CB	CATCH BASIN
CGA	COMPRESSED GAS ASSOCIATION
CI	CAST IRON
CO	CLEANOUT
CP	HOT WATER CIRCULATING PUMP
CS	CLINICAL SINK
CV	CONTROL VALVE
DCW	DOMESTIC COLD WATER
DHW	DOMESTIC HOT WATER
DHWR	DOMESTIC HOT WATER RETURN
DHWR	DOMESTIC WATER RETURN
DHWS	DOMESTIC HOT WATER SUPPLY
DI	DEIONIZED WATER
DN	DOWN
DOE	DEPARTMENT OF ENERGY
DS	DOWNSPOUT
DW	DISHWASHER
DWG	DRAWING
DWH	DOMESTIC WATER HEATER
DWR	DRINKING WATER RETURN
DWS	DRINKING WATER SUPPLY
DWV	DRAIN WASTE VENT
EL	ELEVATION
EMCS	ENERGY MONOSERRAT AND CENTRAL SYSTEM
EPA	ENVIROMENTAL PROTECTION AGENCY
EPACT	ENERGY POLICY ACT
ESC	ESCUTCHEON
ESH	EMERGENCY SHOWER
ET	EXPANSION TANK
EWC	ELECTRIC WATER COOLER
EWC	ELECTRIC WATER COOLER
EWH	ELECTRIC WATER HEATER
EWS	EYE WASH STATION
EX	EXISTING
F	FAHRENHEIT
FCO	FLOOR CLEANOUT
FCW	FILTERED COLD WATER
FD	FLOOR DRAIN
FDC	FIRE DEPARTMENT (HOSE) CONNECTION
FM	FLOW METER
FOP	FUEL OIL PUMP
FOR	FUEL OIL RETURN
FOS	FUEL OIL SUPPLY
FOV	FUEL OIL VENT
FS	FLOOR SINK
FS	FLOW SWITCH
FU	FIXTURE UNITS
GAL	GALLON
GCO	GRADE CLEANOUTS
GPD	GALLONS PER DAY
GPH	GALLONS PER HOUR
GPM	GALLONS PER MINUTE
GPR	GAS PRESSURE REGULATOR
GRS	GAS REGULATOR STATION
GT	GREASE TRAP
GVTR	GAS VENT THROUGH ROOF
GWH	GAS FIRED WATER HEATER
H&CW	HOT AND COLD WATER
HB	HOSE BIBB
HD	HUB DRAIN
HEX	HEAT EXCHANGER
HP	HORSEPOWER
HS	HAND SINK
HST	HOT WATER STORAGE TANK (DOMESTIC)
HWB	HOT WATER BOILER
HWP	HOT WATER PUMP
HYD	HYDRANT
ICW	INDUSTRIAL COLD WATER
INV	INVERT
IPC	INTERNATIONAL PLUMBING CODE
IRW	IRRIGATION WATER
IW	INDIRECT WASTE
IWH	INSTANTANEOUS WATER HEATER
IWR	INDUSTRIAL WATER RETURN
IWS	INDUSTRIAL WATER SUPPLY
KW	KILOWATT
KWHR	KILOWATT-HOUR
L/S	LITER PER SECOND
LA	LABORATORY AIR
LAV	LAVATORY
LBS/HR	POUNDS PER HOUR
LCW	LABORATORY COLD WATER
LHW	LABORATORY HOT WATER
LNG	LIQUID NATURAL GAS
LOX	LIQUID OXYGEN
LV	LABORATORY VACUUM
LW	LOW WATER
M	METER
MA	MEDICAL AIR
MAV	MANUAL AIR VENT
MBH	1000 BTUH
MED	MEDICAL
MER	MECHANICAL EQUIPMENT ROOM
MH	MANHOLE
MOU	MEMORANDUM OF UNDERSTADING
MB	MOP SERVICE BASIN
MV	MEDICAL VACUUM
N2	NITROGEN
N20	NITROUS OXIDE
NC	NORMALLY CLOSED
NG	NATURAL GAS
NIC	NOT IN CONTRACT
NO	NORMALLY OPEN
NOM.	NOMINAL
NPW	NON POTABLE WATER
NTS	NOT TO SCALE
O2	OXYGEN
OC	ON CENTER
OD	OUTSIDE DIAMETER
OFD	OVERFLOW DRAIN
OR	OPERATING ROOM
OVFL	OVERFLOW
PA	PASCAL
PD	PRESSURE DROP OR DIFFERENCE
PDI	PLUMBING AND DRAINAGE INSTITUTE
PG	PRESSURE GAGE
PP	PLUMBING PUMP
PPM	PARTS PER MILLION
PRS	PRESSURE REDUCING STATION
PRV	PRESSURE REDUCING VALVE
PSI	POUNDS PER SQUARE INCH
PSIA	POUNDS PER SQUARE INCH ATMOSPHERE
PSIG	POUNDS PER SQUARE INCH GAUGE
PTRV	PRESSURE TEMPERATURE RELIEF VALVE
PW	POTABLE WATER
RD	ROOF DRAIN
RDL	ROOF DRAIN LEADER
RL	ROOF LEADER
RO	REVERSE OSMOSIS WATER
RWL	RAIN WATER LEADER
SAN	SANITARY SEWER
SCW	SOFTENED COLD WATER
SDMH	STORM DRAIN MANHOLE
SP	SUMP PUMP
SPR	SPRINKLER LINE
SQFT	SQUARE FEET
SS	STAINLESS STEEL
ST	STORAGE TANK
SW	STORM WATER
TCV	TEMPERATURE CONTROL VALVE
TD	TEMPERATURE DIFFERENCE
TD	TRENCH DRAIN
TDH	TOTAL DYNAMIC HEAD
TEMP	TEMPERATURE
TMV	THERMOSTATIC MIXING VALVE
TP	TRAP PRIMER
TSTAT	THERMOSTAT
TWR	TEMPERED WATER RETURN
TWS	TEMPERED WATER SUPPLY
TYP	TYPICAL
UPC	UNIFORM PLUMBING CODE
V	VENT
VAC	VACUUM
VB	VACUUM BREAKER
VCO	VACUUM CLEANER OUTLET
VP	VACUUM PUMP
VS	VENT STACK
VTR	VENT THROUGH ROOF
W	WASTE
WC	WATER CLOSET
WCO	WALL CLEANOUT
WG	WATER GAGE
WH	WALL HYDRANT
WH	WATER HEATER
WHA	WATER HAMMER ARRESTER
WL	WATER LINE
WM	WATER METER
WPD	WATER PRESSURE DROP
WS	WASTE STACK
YCO	YARD CLEANOUT
YH	YARD HYDRANT

KEYED NOTES:

1. REFER TO 4/M-7 FOR CONTINUATION.
2. REFER TO CIVIL PLANS FOR PIPING CONTINUATION OF WATER SERVICE.

GENERAL NOTES:

1. PLUMBING CONTRACTOR SHALL COORDINATE PIPE SLEEVES THRU LOAD BEARING WALLS WITH GENERAL CONTRACTOR PRIOR TO CONSTRUCTION.
2. PLUMBING CONTRACTOR SHALL COORDINATE WITH MASONRY CONTRACTOR WHERE PIPING IS SHOWN THRU WALL - ALL PIPE RUNOUTS TO FIXTURES SHALL BE SURFACE MOUNTED TO WALLS AND CEILING SHOWN AS SUCH ON PLANS.
3. MOUNT ALL HOSE BIBS AT 24" ABOVE TOP OF WET WELL UNLESS OTHERWISE NOTED.

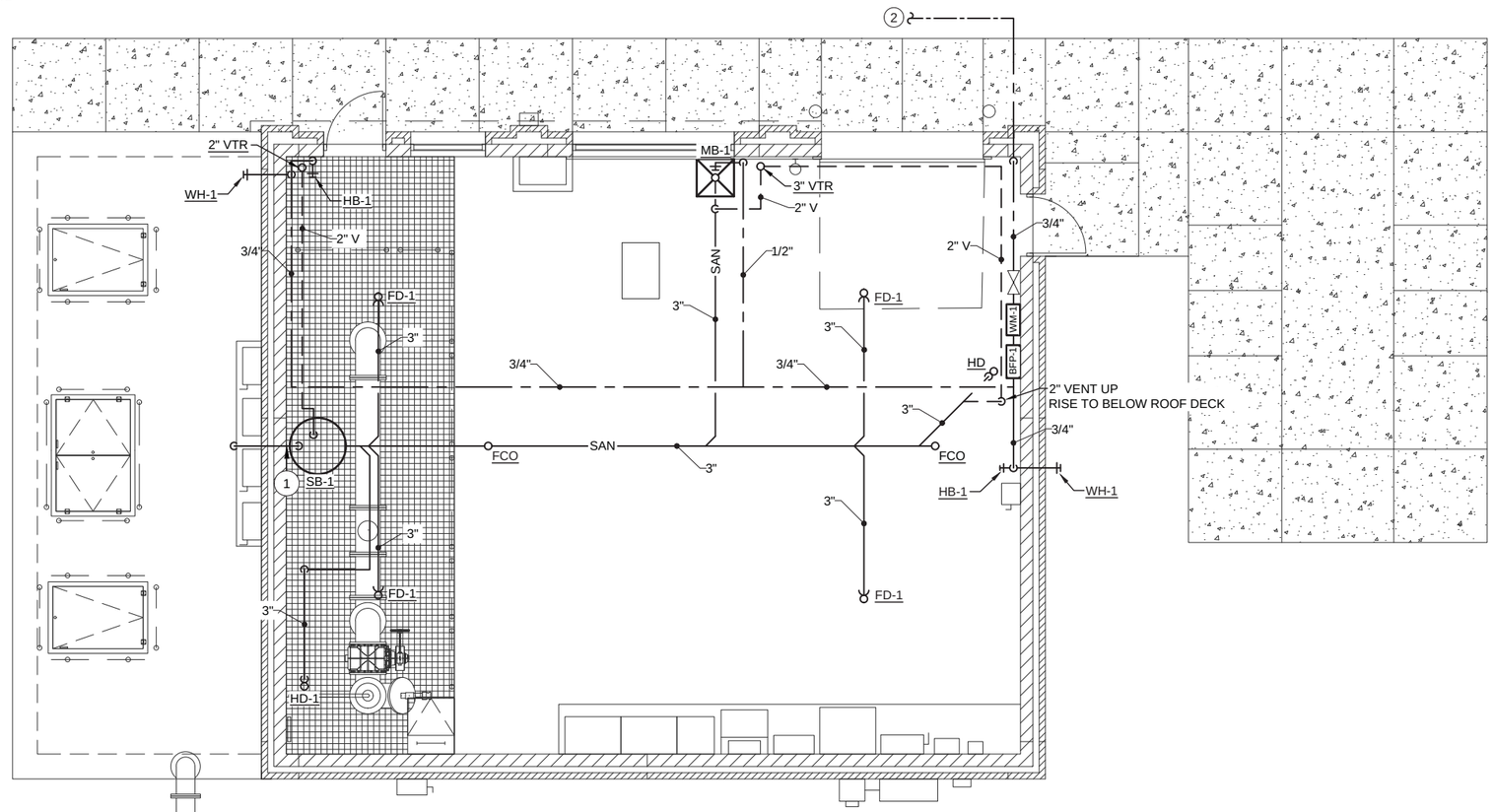

PLUMBING PIPING SYMBOLS

- TOP CONNECTION, 45° OR 90°
- BOTTOM CONNECTION, 45° OR 90°
- SIDE CONNECTION
- CAPPED OUTLET
- RISE OR DROP IN PIPE
- UNION
- PIPE UP
- PIPE DOWN
- DOMESTIC COLD WATER, COLD WATER
- SAN — SANITARY SEWER, BELOW GRADE
- VENT PIPING
- SHUT-OFF VALVE

PLUMBING FIXTURE SCHEDULE

MB-1	MOP BASIN, MOLDED STONE, 24" X 24" X 10", WHITE, STAINLESS STEEL DRAIN, 3" OUTLET, PROVIDE MOP HANGER, HOSE AND HOSE BRACKET. PROVIDE FRP PANELS TO TWO WALL SURFACES ABOVE MOP BASIN. PROVIDE STAINLESS STEEL BUMPERGUARDS ON EXPOSED SIDES.
	ACCEPTABLE MANUFACTURERS: FIAT MSB-2424, ZURN, WILLIAMS, MUSTEE 63M
	SERVICE FAUCET, TWO HANDLE MIXING FAUCET, CHROME PLATED, INTEGRAL VACUMM BREAKER, INTEGRAL STOPS, PAIL HOOK, 3/4" MALE HOSE THREAD SPOUT. PROVIDE HOSE END VACUUM BREAKER (WATTS BAC)
	ACCEPTABLE MANUFACTURERS: CHICAGO FAUCET 897, T&S BRASS, ZURN.
SB-1	SUMP BASIN, 36" DIAMETER, BASIN WITH ANTI-FLOATATION RING, AND SEALED COVER. PUMP AND CONTROLS BY OTHERS.
	ACCEPTABLE MANUFACTURERS: AK INDUSTRIES GB-36-100.

PLUMBING SPECIALTIES

BFP-1	2" REDUCED PRESSURE PRINCIPLE BACKFLOW PREVENTER, ASSE* LISTED 1013, SUPPLIED WITH FULL PORT BALL VALVES AND STRAINER. THE MAIN BODY AND ACCESS COVERS SHALL BE BRONZE (ASTM B 584), THE FIRST AND SECOND CHECKS SHALL BE ACCESSIBLE FOR MAINTENANCE WITHOUT REMOVING THE RELIEF VALVE OR THE ENTIRE DEVICE FROM THE LINE. PROVIDE WITH STRAINER.
	ACCEPTABLE MANUFACTURERS: WATTS LF919, ZURN
FCO-1	FLOOR CLEANOUT, ADJUSTABLE, ROUND, CAST IRON WITH DUCTILE IRON SOLID COVER.
	ACCEPTABLE MANUFACTURERS: SMITH 410-11 SERIES, ZURN, WADE.
FD-1	FLOOR DRAIN, 6" DIA, CAST-IRON BODY, THREADED FLASHING COLLAR, 3" OUTLET.
	ACCEPTABLE MANUFACTURERS: SMITH 2000, ZURN 2415, WADE W-1300.
HB-1	HOSE BIBB, INTERIOR, VACUUM BREAKER, BRASS BODY, CHROME FINISH, WALL CLAMP, 3/4" MALE HOSE THREAD, ROUND HANDLE OPERATOR.
	ACCEPTABLE MANUFACTURERS: WOODFORD 24, ZURN, WADE.
HD	HUB DRAIN, 6" DIA, CAST-IRON BODY, THREADED FLASHING COLLAR, 3" OUTLET, WITH MIDDLE BRONZE HUB ADAPTER.
WM-1	2" WATER METER WITH FULL-SIZED BYPASS. TO BE FURNISHED BY OTHERS.
WH-1	WALL HYDRANT, EXTERIOR, FREEZELESS, AUTODRAINING, VACUUM BREAKER, BRASS BODY, CHROME PLATED FACE, WALL CLAMP, 3/4" MALE HOSE THREAD, LOOSE-KEY OPERATOR.
	ACCEPTABLE MANUFACTURERS: WOODFORD 67, ZURN Z-1310, WADE-8620.

PLAN NORTH

1 PLUMBING FLOOR PLAN

SCALE: 1/8" = 1'-0"

0" 1/8" 1/4" 1/2" 3/4"

OTIE
An Oneida ESC Group Company
5100 Eastpark Blvd., Suite 300, Madison, WI 53718
ph. 608-241-6719 Job# 2019073

PROJECT NO.: 00616135	SCALE: AS SHOWN	NO.	DATE	REVISION	BY
PROJECT DATE: .	DRAWN BY: KLN	.	.	.	.
F.B. :	CHECKED BY: TTW	.	.	.	.
.	.	.	.	.	.

PLOT DATE: 1/13/20, Q:\2019 Projects\2019073 - MSA Duluth Lift Station\02 Design\02 Drawings\Mechanical\P1.dwg

I HEREBY CERTIFY THAT THIS PLAN, REPORT, OR SPECIFICATION WAS PREPARED BY ME OR UNDER MY DIRECT SUPERVISION AND THAT I AM A DULY LICENSED PROFESSIONAL ENGINEER UNDER THE LAWS OF THE STATE OF MINNESOTA.

1/10/2020 Date

43497 License No.

Timothy T. Wendt
ENGINEER

MSA
ENGINEERING | ARCHITECTURE | SURVEYING
FUNDING | PLANNING | ENVIRONMENTAL
www.msa-ps.com

© MSA Professional Services, Inc.

LIFT STATION 15 RELOCATION
CITY OF DULUTH, MINNESOTA
2114 W MICHIGAN STREET

PLUMBING FLOOR PLAN

FILE NO. 00616135

SHEET P1

ABBREVIATIONS

A/E	ARCHITECT / ENGINEER
ACCU	AIR-COOLED CONDENSING UNIT
AFF	ABOVE FINISHED FLOOR
AMP	AMPERGE
AP	ACCESS PANEL
APD	AIR PRESSURE DROP
ARI	AIR CONDITIONING AND REFRIGERATION INSTITUTE
ASHRAE	AMERICAN SOCIETY OF HEATING, REFRIGERATION, AND AIR CONDITIONING ENGINEERS
ASME	AMERICAN SOCIETY OF MECHANICAL ENGINEERS
BHP	BRAKE HORSEPOWER
BTU	BRITISH THERMAL UNIT
BTUH	BRITISH THERMAL UNIT PER HOUR
CCD	COOLING COIL CONDENSATE DRAIN
CENT	CENTRIFUGAL
CFH	CUBIC FEET PER HOUR
CFM	CUBIC FEET PER MINUTE
CFT	CUBIC FEET
COMP	COMPRESSOR
CP	CONDENSATE PUMP
CV	CONSTANT VOLUME
Db	DRY-BULB TEMPERATURE
DEG	DEGREE
DIA	DIAMETER
DN	DOWN
DX	DIRECT EXPANSION
EA	EXHAUST AIR
EAT	ENTERING AIR TEMPERATURE
EC	ELECTRICAL CONTRACTOR
EER	ENERGY EFFICIENCY RATIO
EF	EXHAUST FAN
ENT	ENTERING
ESP	EXTERNAL STATIC PRESSURE
EUH	ELECTRIC UNIT HEATER
EWH	ELECTRIC WALL HEATER
F	FAHRENHEIT OR FURNACE
FA	FREE AREA
FC	FLEXIBLE CONNECTION
FPM	FEET PER MINUTE
FPS	FEET PER SECOND
G	NATURAL GAS
GA	GAUGE
GAL	GALLONS
GC	GENERAL CONTRACTOR
GS	GALVANIZED STEEL
HC	HVAC CONTRACTOR
HP	HORSEPOWER
HZ	HERTZ
I/O	INPUT/OUTPUT
ID	INSIDE DIAMETER
IN	INCHES
IN HG	INCHES OF MERCURY
kW	KILOWATT
kWh	KILOWATT HOUR
L	LOUVER
LAT	LEAVING AIR TEMPERATURE
LBS/HR	POUNDS PER HOUR
LF	LINEAR FOOT (FEET)
MAX	MAXIMUM
MBH	1000 BTUH
MCA	MINIMUM BRANCH CIRCUIT AMPACITY
MD	MOTORIZED DAMPER
MERV	MINIMUM EFFICIENCY REPORTING VALUE
MIN	MINIMUM
MOP	MAX OVERCURRENT PROTECTION
NA	NOT APPLICABLE
NC	NOISE CRITERIA
NC	NORMALLY CLOSED
NO	NORMALLY OPEN
NTS	NOT TO SCALE
OA	OUTSIDE AIR
OED	OPEN ENDED DUCT
PCF	POUNDS PER CUBIC FOOT (FEET)
PD	PRESSURE DROP
PG	PRESSURE GAGE
PVC	POLYVINYL CHOLRIDE
RPM	REVOLUTIONS PER MINUTE
SA	SUPPLY AIR
SAT	SUPPLY AIR TEMPERATURE
SCFM	STANDARD CUBIC FEET PER MINUTE
SF	SUPPLY FAN
SI	SQUARE INCHES
SP	STATIC PRESSURE
SQ FT	SQUARE FOOT (FEET)
SS	STAINLESS STEEL
TAB	TESTING, ADJUSTING, BALANCE
TCP	TEMPERATURE CONTROL PANEL
TD	TEMPERATURE DIFFERENCE
TSP	TOTAL STATIC PRESSURE
TSTAT	THERMOSTAT

DUCTWORK SYMBOLS

UP / DN	SUPPLY DUCT (UP & DOWN)
UP / DN	RETURN DUCT (UP & DOWN)
UP / DN	EXHAUST DUCT (UP & DOWN)
	SUPPLY REGISTER OR GRILLE (WALL TYPE)
	EXHAUST OR RETURN REGISTER OR GRILLE (WALL TYPE)
FC	FLEXIBLE CONNECTION, EQUIPMENT, VIBRATION, OR SEISMIC
10/8	NEW DUCT (INSIDE DIMENSIONS: WIDTH/DEPTH)
	MANUAL VOLUME DAMPER
M	MOTORIZED CONTROL DAMPER
45°	STANDARD BRANCH SUPPLY OR RETURN, NO SPLITTER (45° TAP)

CONTROLS SYMBOLS

T	ROOM THERMOSTAT - WALL MOUNT
$	WALL MOUNTED FAN ON-OFF SWITCH
SC	SOLID STATE SPEED CONTROL

GENERAL PIPING SYMBOLS

	TOP CONNECTION, 45° OR 90°
	BOTTOM CONNECTION, 45° OR 90°
	SIDE CONNECTION
	CAPPED OUTLET
	RISE OR DROP IN PIPE
	PIPE UP
	PIPE DOWN
	PIPE CAP

GENERAL PIPING SYMBOLS

CA	COMBUSTION AIR PIPING
CD	CONDENSATE DRAIN PIPING
G	NATURAL GAS
R	REFRIGERANT PIPING
V	VENT PIPING

OTIE
An Oneida ESC Group Company
5100 Eastpark Blvd., Suite 300, Madison, WI 53718
ph. 608-241-6719 Job# 2019073

PROJECT NO.: 00616135	SCALE: AS SHOWN	NO.	DATE	REVISION	BY
PROJECT DATE: .	DRAWN BY: KLN	.	.	.	.
F.B. :	CHECKED BY: TTW	.	.	.	.
.	.	.	.	.	.

PLOT DATE: 1/13/20, Q:\2019 Projects\2019073 - MSA Duluth Lift Station\02 Design\02 Drawings\Mechanical\H1.dwg

I HEREBY CERTIFY THAT THIS PLAN, REPORT, OR SPECIFICATION WAS PREPARED BY ME OR UNDER MY DIRECT SUPERVISION AND THAT I AM A DULY LICENSED PROFESSIONAL ENGINEER UNDER THE LAWS OF THE STATE OF MINNESOTA.

1/10/2020
Date

43497
License No.

Timothy T. Wendt
ENGINEER

MSA
ENGINEERING | ARCHITECTURE | SURVEYING
FUNDING | PLANNING | ENVIRONMENTAL
www.msa-ps.com

© MSA Professional Services, Inc.

LIFT STATION 15 RELOCATION
CITY OF DULUTH, MINNESOTA
2114 W MICHIGAN STREET

MECHANICAL SYMBOLS AND ABBREVIATIONS

FILE NO. 00616135
SHEET H1

KEYED NOTES

1. INSTALL THE TOP OF LOUVER L-1 AT 9' 8" AFF. REFER TO DETAIL 1/H3.
2. INSTALL THE EXHAUST FAN EF-1 PER DETAIL 1/H3 (WITH SCREEN ON INLET).
3. EXTEND 1" NATURAL GAS UP EXTERIOR OF BUILDING AND PENETRATE INTO BUILDING AT 2'-0" BELOW ROOF DECK. SUPPORT PIPING WITH UNISTRUT AND PIPE CLAMP.
4. INSTALL THE GUH-1 AT 8'-0" TO BOTTOM OF UNIT. REFER TO DETAIL 3/H3.
5. INSTALL THE VENTING AND COMBUSTION AIR CONCENTRIC ADAPTER AND TERMINATION PER DETAIL 3/H3. COMBUSTION AIR SHALL BE INSULATED.
6. INSTALL THE TOP OF LOUVER L-2 AT 13' 10" AFF. REFER TO DETAIL 4/H3.
7. FREEZE STAT TO BE INTERLOCKED WITH SCADA SYSTEM.
8. PROVIDE WALL BRACKET FOR HP-1, MOUNT AT 4'-0" AFG MINIMUM.
9. AC-1 TO BE INSTALLED AT 8'-0" AFF.
10. AC-1 CONDENSATE DRAIN TO HUB DRAIN.

GENERAL NOTES

1. INSTALL THE INTERIOR GAS PIPING A MAXIMUM OF 1'-6" BELOW ROOF STRUCTURE. COORDINATE WITH ALL TRADES PRIOR TO INSTALLATION.
2. INSTALL ALL THERMOSTATS AND CONTROLS AT 48" AFF UNLESS NOTED OTHERWISE ON THE PLAN.
3. INSTALL THE GAS PRESSURE REGULATORS AT ALL GAS FIRED EQUIPMENT PER PLANS AND DETAILS. FOR INTERIOR MOUNTED REGULATORS EXTEND GAS VENTS TO BUILDING EXTERIOR AND TERMINATE WITH SCREENED VENT CAP. VENTING MAY BE ELIMINATED WHERE VENT LIMITING DEVICE ARE USED AND INSTALLED PER MANUFACTURER'S INSTALLATION INSTRUCTIONS.

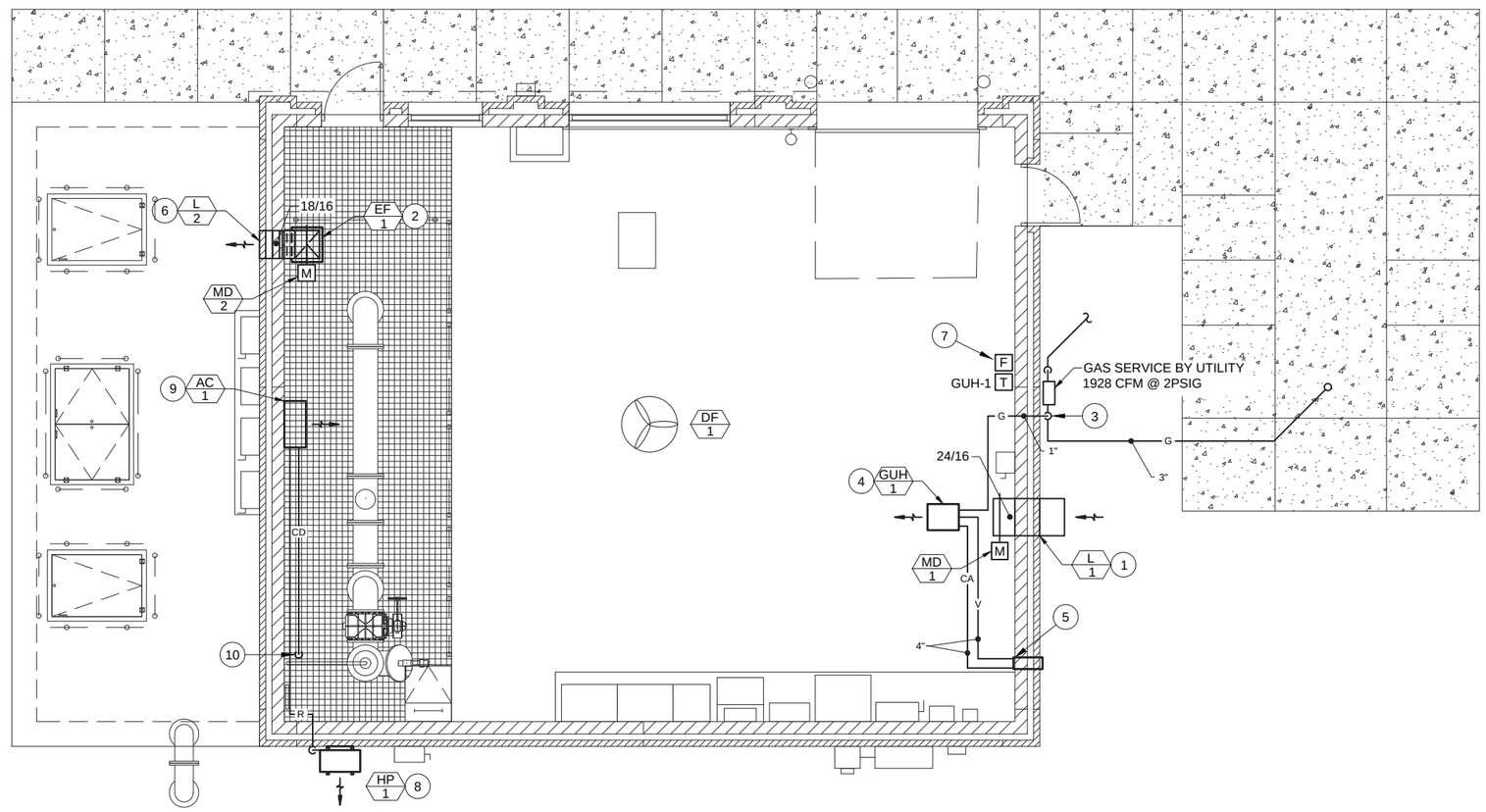

PLAN NORTH

1 HVAC FLOOR PLAN

SCALE: 1/8" = 1'-0"

0" 1/8" 1/4" 1/2" 3/4"

OTIE
An Oneida ESC Group Company
5100 Eastpark Blvd., Suite 300, Madison, WI 53718
ph. 608-241-6719 Job# 2019073

PROJECT NO.: 00616135	SCALE: AS SHOWN	NO.	DATE	REVISION	BY
PROJECT DATE: .	DRAWN BY: KLN	.	.	.	.
F.B. :	CHECKED BY: TTW	.	.	.	.
.	.	.	.	.	.

PLOT DATE: 1/13/20, Q:\2019 Projects\2019073 - MSA Duluth Lift Station\02 Design\02 Drawings\Mechanical\H2.dwg

I HEREBY CERTIFY THAT THIS PLAN, REPORT, OR SPECIFICATION WAS PREPARED BY ME OR UNDER MY DIRECT SUPERVISION AND THAT I AM A DULY LICENSED PROFESSIONAL ENGINEER UNDER THE LAWS OF THE STATE OF MINNESOTA.

1/10/2020 Date

43497 License No.

Timothy T. Wendt
ENGINEER

MSA

ENGINEERING | ARCHITECTURE | SURVEYING
FUNDING | PLANNING | ENVIRONMENTAL

www.msa-ps.com

© MSA Professional Services, Inc.

LIFT STATION 15 RELOCATION
CITY OF DULUTH, MINNESOTA
2114 W MICHIGAN STREET

HVAC FLOOR PLAN

FILE NO. 00616135

SHEET H2

SPLIT SYSTEM AIR-TO-AIR HEAT PUMP SCHEDULE

																	OUTDOOR UNIT										
	BASIS OF DESIGN		FAN DATA							COIL PERFORMANCE										ELECTRICAL				MINIMUM SYSTEM EFFICIENCY			
						ELECTRICAL				COOLING			HEATING														
MARK	MANUFACTURER	MODEL	SUPPLY AIRFLOW (CFM)	OUTSIDE AIRFLOW (CFM)	EXT. STATIC PRESS. (IN WG)	MOTOR OUTPUT (W)	VOLTAGE	PHASE	NEMA STARTER TYPE	SENSIBLE CAPACITY (MBH)	TOTAL CAPACITY (MBH)	E.A.T. (°F DB/ °F WB)	CAPACITY (MBH)	COMP. HEAT @ DESIGN (MBH)	SUPPLEMENTAL HEAT (KW)	E.A.T. (°F DB)	NOMINAL CAPACITY (TONS)	NO. OF COMPR	REFRIGERANT TYPE	MINIMUM CIRCUITING AMPS (MCA)	MAXIMUM OVERCURRENT PROTECTION (MOCP)	VOLTAGE	PHASE	C.O.P.	SEER	HSPF	NOTES
AC-1/HP-1	MITSUBISHI	MSZ-GL18NA	500	0	0	30	208	1	INTEGRAL	15660	18000	80	13800		-	60	1.5	1	410A	14	15	208	1	2.32	20.5	11.2	1
NOTES:	1. SINGLE POINT POWER FROM OUTDOOR UNIT. POWER FOR INDOOR UNIT FIELD WIRED FROM OUTDOOR UNIT.																										

FAN SCHEDULE

UNIT NO.	MANUFACTURER	MODEL	TYPE	CFM	E.S.P.	H.P.	DRIVE	R.P.M.	SONES	VOLTS	PHASE	REMARKS
EF-1	GREENHECK	SQ-140-VG	INLINE	700	0.375	3/4	DIRECT	959	7.2	115	1	1
NOTES:	1. PROVIDE SPEED CONTROLLER. E.C. TO MOUNT ON FAN HOUSING.											

GAS FIRED UNIT HEATER

UNIT NO.	MANUFACTURER	MODEL	INPUT MBH	OUTPUT MBH	CFM	ATR	ELECTRICAL DATA				FLUE SIZE	REMARKS
							H.P.	MOTOR AMPS	VOLTS	PHASE		
GUH-1	MODINE	BTS-150	150	123	1700	65	1/3	5	120	1	4	1, 2
NOTES:	1. PROVIDE UNIT HEATER WITH REMOTE LINE VOLTAGE THERMOSTAT TO E.C. FOR INSTALLATION.											
	2. PROVIDE CONCENTRIC VENT / INTAKE KIT.											

LOUVER SCHEDULE

UNIT NO.	MANUFACTURER	MODEL	SP	AIR FLOW (CFM)	WIDTH (IN)	HEIGHT (IN)	FREE AREA VEL.(FPM)	NOTES
L-1	GREENHECK	ESJ-401	<0.1	700	24	18	500	1
L-2	GREENHECK	ESJ-401	<0.1	700	18	18	700	1
NOTES:	1. KYNAR FINISH. STANDARD COLOR SELECTED BY ARCHITECT.							

DESTRATIFICATION FAN

UNIT NO.	MANUFACTURER	MODEL	CFM	E.S.P.	H.P.	DRIVE	R.P.M.	SONES	VOLTS	PHASE	NOTES
DF-1	LEADING EDGE	36201	12500	-	75 WATTS	DIRECT	395	-	120	1	1
NOTES:	1. PROVIDE LINE VOLTAGE SPEED CONTROLLER TO E.C. FOR INSTALLATION.										

MOTORIZED DAMPER SCHEDULE

UNIT NO.	LOCATION	SERVES	WIDTH (INCHES)	HEIGHT (IN)	ACTUATOR VOLTAGE	NOTES
MD-1	SCREEN ROOM	L-1	24	16	120	1,2,3
MD-2	SCREEN ROOM	L-2	18	16	120	1,2,3
NOTES:	1. DAMPER SIZE LISTED IS DUCT OPENING SIZE.					
	2. MD-2 VERIFY FAN OUTLET DIMENSIONS AND MATCH DUCT/DAMPER SIZE.					
	3. SHALL BE AN INSULATED DAMPER.					

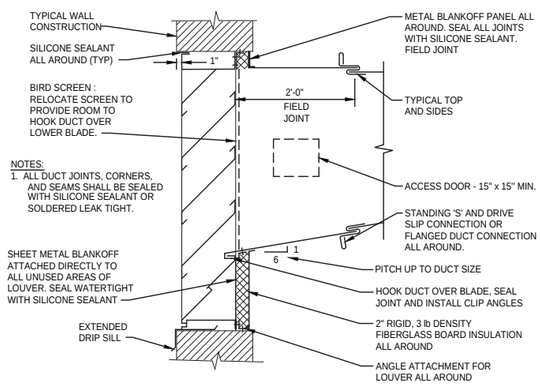

4 EXHAUST LOUVER INSTALLATION
SCALE: NONE

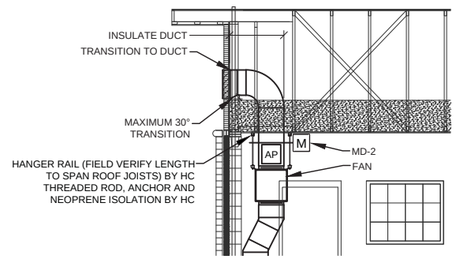

2 EXHAUST FAN EF-1 INSTALLATION
SCALE: NONE

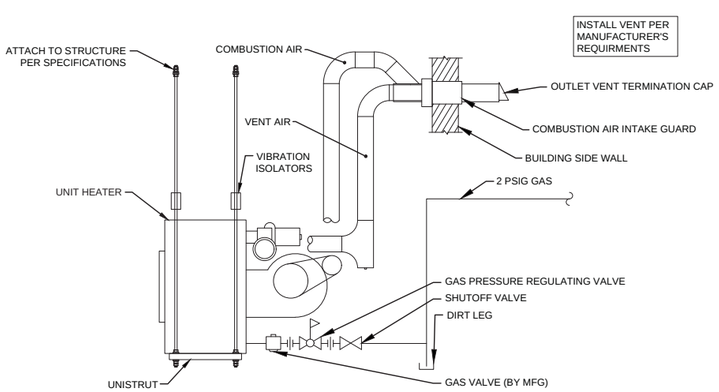

3 GAS FIRED UNIT HEATER DETAIL
SCALE: NONE

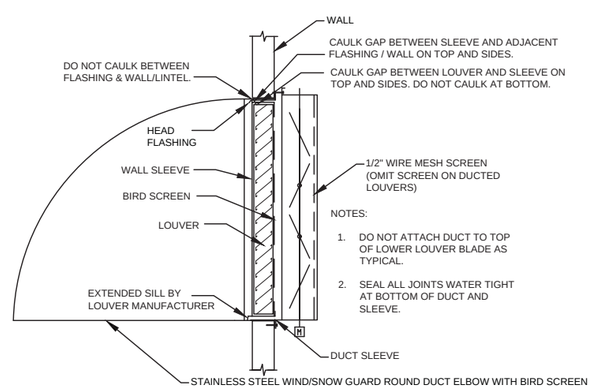

1 INTAKE LOUVER INSTALLATION
SCALE: NONE

OTIE
An Oneida ESC Group Company
5100 Eastpark Blvd., Suite 300, Madison, WI 53718
ph. 608-241-6719 Job# 2019073

PROJECT NO.: 00616135	SCALE: AS SHOWN	NO.	DATE	REVISION	BY
PROJECT DATE: .	DRAWN BY: KLN	.	.	.	.
F.B. :	CHECKED BY: TTW	.	.	.	.
.		.	.	.	.

PLOT DATE: 1/13/20, Q:\2019 Projects\2019073 - MSA Duluth Lift Station\02 Design\02 Drawings\Mechanical\H3.dwg

I HEREBY CERTIFY THAT THIS PLAN, REPORT, OR SPECIFICATION WAS PREPARED BY ME OR UNDER MY DIRECT SUPERVISION AND THAT I AM A DULY LICENSED PROFESSIONAL ENGINEER UNDER THE LAWS OF THE STATE OF MINNESOTA.

1/10/2020 — Date
43497 — License No.
Timothy T. Wendt
ENGINEER

MSA
ENGINEERING | ARCHITECTURE | SURVEYING
FUNDING | PLANNING | ENVIRONMENTAL
www.msa-ps.com
© MSA Professional Services, Inc.

LIFT STATION 15 RELOCATION
CITY OF DULUTH, MINNESOTA
2114 W MICHIGAN STREET

MECHANICAL SCHEDULES AND DETAILS

FILE NO. 00616135
SHEET H3

ABBREVIATIONS

@	AT
AE	ARCHITECT / ENGINEER
A	AMPERES (AMPS)
AC	ABOVE COUNTER APPROX 44" AFF
ACCU	AIR-COOLED CONDENSING UNIT
AD	AIR DEVICE
ADA	AMERICAN W/ DISABILITIES ACT
ADJ	USER-ADJUSTABLE
AFF	ABOVE FINISH FLOOR
AFUE	ANNUAL FUEL UTILIZATION EFFICIENCY
AHU	AIR HANDLING UNIT
AL	ALUMINUM
ANSI	AMERICAN NATIONAL STANDARDS INSTITUTE
APPROX	APPROXIMATELY
ARCH	ARCHITECT / ARCHITECTURAL
ARI	AMERICAN REFRIGERATION INSTITUTE
ASTM	AMERICAN SOCIETY FOR TESTING MATERIALS
BF	BACKFLOW PREVENTER
BLDG	BUILDING
BOB	BOTTOM OF BEAM
BOC	BOTTOM OF CONDUIT
BOD	BOTTOM OF DUCT
BOP	BOTTOM OF PIPE
BSMT	BASEMENT
BTU	BRITISH THERMAL UNIT
C	CONDUIT
COND	CONDUIT, CONDENSATE
CAP	CAPACITY
CB	CIRCUIT BREAKER
CFM	CUBIC FEET PER MINUTE
CHS, R	CHILLED WATER SUPPLY, RETURN
CKT	CIRCUIT
CLG	CEILING
CO	CLEAN OUT
CONT	CONTINUATION
CU	COPPER
CR	CONDENSER RETURN
CS	CONDENSER SUPPLY
D	CONDENSATE DRAIN
DC	DIRECT CURRENT
DCW	DOMESTIC COLD WATER
DEMO	DEMOLITION
DHW	DOMESTIC HOT WATER
DIA	DIAMETER
DWH	DOMESTIC WATER HEATER
ELEC	ELECTRICAL, ELECTRICIAN
EF	EXHAUST FAN
ESP	EXTERNAL STATIC PRESSURE
EM	LIGHTING FIXTURE W/INTEGRAL EMERGENCYBATTERY OPERATION
ETC	ETCETERA
EWH	ELECTRIC WALL HEATER
EXH	EXHAUST
FACP	FIRE ALARM CONTROL PANEL
FAS	FIRE ALARM SYSTEM
FCO	FLOOR CLEANOUT
FD	FLOOR DRAIN
FD	FIRE DAMPER
FLA	FULL LOAD AMPS
FLEX	FLEXIBLE
FLUOR	FLUORESCENT
FP	FIRE PROTECTION
FPM	FEET PER MINUTE
FPT	FEMALE PIPE THREAD
GA	GAUGE
GALV	GALVANIZED
GC	GENERAL CONTRACTOR
GFI	GROUND FAULT CIRCUIT INTERRUPTED
GSHP	GROUND SOURCE HEAT PUMP
GWB	GYPSUM WALL BOARD ("SHEET ROCK")
HACR	HEATING, AIR-CONDITIONING, REFRIGERATION
HB	HOSE BIB
HID	HIGH INTENSITY DISCHARGE
HOA	HAND/OFF/AUTO
HP	HORSEPOWER
HPS	HIGH PRESSURE SODIUM
HTW	HIGH TEMP WATER
HWR	HOT WATER RECIRCULATION (DOMESTIC)
HWS	HEATING HOT WATER SUPPLY
IAC	ILLINOIS ACCESSIBILITY CODE
IG	ISOLATED GROUND
INT'L	INTERLOCK/INTERLOCKED
JBOX	JUNCTION BOX
KTR	CONTRACTOR
KVA	KILO VOLT AMPERES
L	LAVATORY
LED	LIGHT EMITTING DIODE
LF	LINEAR FEET
LCR	LOW PRESSURE CONDENSATE RETURN
MAX	MAXIMUM
MBH	THOUSAND BTU PER HOUR
MCA	MINIMUM CIRCUIT AMPACITY
MECH	MECHANICAL
MFR	MANUFACTURER
MH	METAL HALIDE
MIN	MINIMUM
MOCP	MAXIMUM OVERCURRENT PROTECTION
MOD	MOTOR OPERATED DAMPER
MS	MOP SINK
NAIMA	NORTH AMERICAN INSULATION MFR'S ASSOCIATION
NC	NORMALLY CLOSED
NEMA	NATIONAL ELECTRICAL MANUFACTURER'S ASSOCIATION
NFPA	NATIONAL FIRE PROTECTION ASSOCIATION
NIC	NOT IN CONTRACT
NL	NIGHT LIGHT FIXTURE
NO	NORMALLY OPEN
NPT	NATIONAL PIPE THREAD
NTS	NOT TO SCALE
OA	OUTSIDE AIR
OC	ON CENTER
PC	PHOTO CELL
PLBG	PLUMBING
PR	PUMPED CONDENSATE RETURN
PREP	PREPARATION
PSI	POUNDS PER SQUARE INCH
PSIG	POUNDS PER SQUARE INCH, GAUGE
PVC	POLYVINYL CHLORIDE
QTY	QUANTITY
RA	RETURN AIR
REC	RECEPTACLE, RECOMMENDATION
REFR	REFRIGERATION/REFRIGERANT
RHG	REFRIGERANT HOT GAS LINE
RL	REFRIGERANT LIQUID LINE
RLA	RUNNING LOAD AMPS
RS	REFRIGERANT SUCTION LINE
S	SINK
SF	SQUARE FEET
SA	SUPPLY AIR
SAN	SANITARY
SAT	SUSPENDED ACOUSTIC TILE
SEER	SEASONAL ENERGY EFFICIENCY RATIO
SO	SCREENED OPENING
SMACNA	SHEET METAL AND AIR CONDITIONING CONTRACTORS NATIONAL ASSOCIATION
SPEC	PROJECT SPECIFICATIONS
SS	SERVICE SINK
STM	STORM
STRUCT	STRUCTURAL
T&P	TEMPERATURE & PRESSURE
TAB	TEST & BALANCE
TRANS	TRANSITION
TXV	THERMAL EXPANSION VALVE
TYP	TYPICAL
UC	UNDER COUNTER
UL	UNDERWRITERS LABORATORIES
UON	UNLESS OTHERWISE NOTED
V	VENT, VOLTS
VAC	VOLTS ALTERNATING CURRENT
VERT	VERTICAL
VD	VOLUME DAMPER (MANUAL, LOCKING TYPE)
VR	VACUUM (CONDENSATE) RETURN
VTR	VENT THRU ROOF
W	WATTS
W/	WITH
W/O	WITHOUT
WC	WATER COLUMN
WCO	WALL CLEAN OUT
WH	WALL HYDRANT
WP	WEATHERPROOF
YCO	YARD CLEAN OUT

PROJECT GENERAL NOTES

1. ONE-LINE DIAGRAM FOR POWER DISTRIBUTION, USE ANSI STANDARD SYMBOLS AND ABBREVIATIONS.
2. SEE INSTRUMENTATION DRAWINGS FOR INSTRUMENTATION SYMBOLS AND DETAILS.
3. OTHER ABBREVIATIONS PER ANSI Z32.13 AND ISA S5.1
4. ELEVATIONS ADJACENT TO SYMBOLS ARE BASED ON STATION DATUM. HEIGHTS ADJACENT TO SYMBOLS (+4.0) ARE REFERENCED TO FINISHED FLOOR GRADE.
5. SEE SPECIFICATIONS AND SCHEDULES FOR COMPONENT REQUIREMENTS FOR MOTOR CONTROLLERS AND FOR CONTRACTORS.
6. DO NOT SCALE DRAWINGS. IF DIMENSIONS ARE IN QUESTION, THE CONTRACTOR SHALL BE RESPONSIBLE FOR OBTAINING CLARIFICATION FROM ENGINEER PRIOR TO PROCEEDING WITH WORK.
7. EFFORT WAS MADE IN THE PREPARATION OF THE CONTRACT DOCUMENTATION TO COORDINATE CONNECTIONS WITH ALL DISCIPLINES, HOWEVER THE EC IS RESPONSIBLE TO REVIEW ENTIRE PLANS AND THE SPECIFICATIONS AND INCLUDE ALL WORK REQUIRED TO PROVIDE A COMPLETE PROJECT.
8. HOMERUN WIRING SHALL BE PER ONE-LINE DIAGRAM AND WIRE SCHEDULE. EC SHALL MODIFY WIRE AND CIRCUIT SIZES BASED ON ACTUAL EQUIPMENT AND CIRCUIT REQUIREMENTS. CONTRACTOR SHALL FIELD VERIFY FEEDER SIZING FOR VOLTAGE DROP PER ACTUAL WIRE RUNS.
9. MINIMUM CONDUIT SIZE 3/4", UNLESS OTHERWISE NOTED.
10. ALL BRANCH CIRCUIT HOMERUNS TO BE (2)#12 & #12G IN 3/4"C MINIMUM UNLESS OTHERWISE NOTED OR REQUIRED. MOTOR WIRING AS INDICATED ON ONE-LINE DIAGRAM.
11. ALL DEVICE SIGNAL CIRCUIT HOMERUNS TO BE (2)#14 IN 3/4"C.
12. PROVIDE ALL MOTOR AND SIGNAL CIRCUIT HOMERUNS RELATED TO PROCESS EQUIPMENT.
13. ALL CONDUITS/RACEWAYS AND BOXES SHALL BE CONCEALED IN WALLS AND CEILINGS. THE INSTALLATION SHALL MINIMIZE EXPOSED CONDUITS AND RACEWAYS. ONLY VERTICAL EXPOSED RACEWAYS SHALL BE ALLOWED. EC SHALL COORDINATE INSTALLATION OF RACEWAYS.
14. CONTRACTOR SHALL FIELD VERIFY THAT ALL LOADS AND BRANCH LOADS ARE BALANCED. THE CONTRACTOR SHALL ADJUST AND BALANCE LOADS (INCLUSIVE AND COMPLETE).
15. COORDINATE EXACT LOCATION OF ALL EQUIPMENT AND FIXTURES WITH GC, OWNER, AND ENGINEER PRIOR TO ROUGH-IN. ALL ITEMS AND DEVICES ARE SHOWN FOR GENERAL INTENT AND CLARITY. ACTUAL LAYOUT AND INSTALLATION MY VARY, BASED ON FIELD CONDITIONS. ALL CHANGES SHALL BE COORDINATED WITH OWNER AND FIELD ENGINEER.
16. CONTRACTOR SHALL REVIEW TYPICAL DETAILS AND ALL CONSTRUCTION SHALL COMPLY WITH ALL TYPICAL DRAWINGS AND DETAILS.
17. FUTURE EQUIPMENT AND DEVICES SHALL BE ROUGH IN CONDUIT FOR CONTROL AND POWER CABLES TO BOXES. ROUGH-IN CONDUIT AND MAKE PROVISION FOR FUTURE WIRING AND CABLING FOR POWER AND CONTROL. (TYP.)
18. CONTRACTOR SHALL ASSIST AND COORDINATE ALL SITE RELATED DEMOLITION (COMPLETE) WITH ALL OTHER TRADES.
19. EC SHALL REVIEW CONTRACT DOCUMENT AND PROVIDE ALL WORK, MATERIALS, AND EQUIPMENT FOR A COMPLETE AND OPERABLE PROJECT.
20. PROVIDE CONCRETE HOUSEKEEPING PAD FOR ALL FLOOR MOUNTED EQUIPMENT.
21. ALL EXTERIOR RACEWAYS THAT EXTEND FROM BELOW GRADE TO ABOVE GRADE SHALL BE INSTALLED WITH EXPANSION COLLAR SLEEVES.
22. ALL WALL SLEEVES SHALL BE LOCATED PER ACTUAL EQUIPMENT AND COORDINATED W/ GC AND BUILDING MANUFACTURER.
23. OBSERVE APPLICABLE CODE REQUIREMENTS FOR ELECTRICAL INSTALLATIONS WITHIN HAZARDOUS AREAS NOTED ON PLANS.
24. CONSTRUCTION SHALL BE PERFORMED IN A WORKMANSHIP MANNER AND COMPLY WITH ALL RELEVANT CODES, REGULATIONS, AND GUIDANCE.
25. ELECTRIC SERVICE SHALL BE INSTALLED COMPLETE AND IN COMPLIANCE TO THE UTILITY REQUIREMENTS. ONLY DIRECT FEES FROM THE UTILITY MAY BE APPLIED TO THE UTILITY ALLOWANCE. ALL OTHER WORK, LABOR, MATERIALS SHALL BE INCLUSIVE TO THE CONTRACT.
26. ALL EXTERIOR MATERIALS SHALL BE PAINTED TO MATCH BUILDING. COORDINATE WITH ENGINEER.

I HEREBY CERTIFY THAT THIS PLAN, REPORT, OR SPECIFICATION WAS PREPARED BY ME OR UNDER MY DIRECT SUPERVISION AND THAT I AM A DULY LICENSED PROFESSIONAL ENGINEER UNDER THE LAWS OF THE STATE OF MINNESOTA.

1/10/2020 Date — 44287 License No.

SCOTT R CHILSON

MSA

ENGINEERING | ARCHITECTURE | SURVEYING
FUNDING | PLANNING | ENVIRONMENTAL
332 W Superior Street, Duluth MN 55802
(218) 722-3915 www.msa-ps.com

© MSA Professional Services, Inc.

LIFT STATION 15 RELOCATION
CITY OF DULUTH, MINNESOTA
2114 W MICHIGAN STREET

ELECTRICAL SYMBOLS AND ABBREVIATIONS

FILE NO. 00616135

SHEET E-1

SYMBOLS

AHU-1 — EQUIPMENT MARKER
EQUIPMENT TAG

SECTION CUT MARKER
SHEET WHERE SECTION IS SHOWN
SHEET WHERE SECTION IS CUT

"P-1" 33 B-08
EQUIPMENT SERVED
CIRCUIT NUMBER
ELEC PANEL TAG

POINT OF CONNECTION:
NEW WORK TO EXISTING

EQUIPMENT TO BE DEMOLISHED
SHOWN W/THIN DOTTED LINES
AND/OR HATCH

EXISTING TO REMAIN
SHOWN W/THIN SOLID LINES

NEW WORK INSTALLED UNDER
THIS CONTRACT SHOWN
W/THICK SOLID LINES

T — THERMOSTAT

F — COMBINATION MAGNETIC MOTOR STARTER AND SAFETY SWITCH. PROVIDE WHERE SHOWN, SUFFICIENT FOR VOLTAGE AND MOCP SHOWN HEREIN. PROVIDE W/ HACR TYPE FUSES SIZED TO MOCP SHOWN HEREIN.
F- DENOTES FUSED SWITCH

F — SAFETY SWITCH. PROVIDE WHERE SHOWN, SUFFICIENT FOR VOLTAGE AND MOCP SHOWN HEREIN. PROVIDE AS NONFUSED SWITCH, UON. IF PROVIDING A FUSED SWITCH PROVIDE W/ HACR TYPE FUSES SIZED TO MOCP SHOWN HEREIN.
F- DENOTES FUSED SWITCH

T/F — TRANSFORMER FOR LOW VOLTAGE LIGHTING

F — FIRE ALARM MANUAL PULL STATION

F — FIRE ALARM AUDIO-VISUAL ALARM - 89DBA UON. 15 CD REFERS TO CANDELA RATING.

F 15 — FIRE ALARM VISUAL ONLY ALARM - 15 CD REFERS TO CANDELA RATING.

S — FIRE ALARM IONIZATION TYPE SMOKE DETECTOR

S CO — COMBINATION SMOKE/CARBON MONOXIDE DETECTOR

T — FIRE ALARM HEAT DETECTOR

ELECTRIC PANEL

WALL MOUNTED FIXTURE - AS SCHEDULED

WALL MOUNTED SCONCE FIXTURE - AS SCHEDULED

"CAN"-TYPE DOWNLIGHT MOUNTED IN CEILING - AS SCHEDULED

F3 25 a — FLUORESCENT LIGHTING FIXTURE - AS SCHEDULED.
"F3" FIXTURE TAG
"25" CIRCUIT NUMBER
"a" SWITCH

EMERGENCY LIGHT-AS SCHEDULED

WALL / CEILING MOUNTED EXIT SIGN FIXTURE SHADED AREA INDICATES FACE LOCATION. ARROW DENOTES DIRECTION OF EXIT. PUNCHOUT ARROW IN FIELD.

MOTOR CONNECTION (MOTOR BY OTHERS)

JUNCTION BOX - WALL, CEILING, OR FLOOR MOUNTED AS REQUIRED

G — EXPOSED CONDUIT WITH WIRING - LINE, NEUTRAL, SWITCH LEG AND GROUND INDICATED

CONDUIT TURN DOWN
GROUND
SWITCH LEG
NEUTRAL
LINE
CONDUIT TURN UP
} #12 AWG UON

TC — CONCEALED TELECOMM CONDUIT
T = TELEPHONE ONLY
TC = COMBINATION TELEPHONE/COMPUTER

C — CONCEALED COMPUTER/DATA SYSTEM CONDUIT

CONCEALED CONDUIT IN WALL OR CEILING CONSTRUCTION

CONDUIT UNDER FLOOR OR GRADE

FLEXIBLE CONDUIT CONNECTION

CENTER OF ALL SWITCHES IN NON-ADA AREAS = 54" AFF, UON.
CENTER OF ALL SWITCHES IN ADA AREAS = 48" AFF, UON.

SINGLE POLE SWITCH

3 — THREE WAY SWITCH

4 — FOUR WAY SWITCH

AS — AUTOMATIC WALL SWITCH W/ MANUAL OVERRIDE

OC — CEILING MOUNTED OCCUPANCY SENSOR.

PC — CEILING MOUNTED PHOTOCELL SENSOR.

T — MANUAL MOTOR STARTER (TT SWITCH)

CENTER OF REC = 18" AFF, UON. MINIMUM HEIGHT OF ALL REC'S SHALL BE 15" AFF IN ALL ADA DESIGNATED AREAS, UON.

12O VOLT DUPLEX RECEPTACLE

A — 12O VOLT RECEPTACLE PROTECTED BY ARC-FAULT CIRCUIT BREAKER IN PANEL

12O VOLT DOUBLE DUPLEX (QUADPLEX) RECEPTACLE

12O VOLT DUPLEX RECEPTACLE, MOUNTED FLUSH WITH FLOOR LEVEL.

GFI — 12O VOLT GFI TYPE DUPLEX RECEPTACLE

GFI — 12O VOLT GFI TYPE DUPLEX RECEPTACLE, MOUNTED FLUSH WITH FLOOR LEVEL.

WP GFI — 12O VOLT GFI TYPE DUPLEX RECEPTACLE WITH WEATHERPROOF COVER PLATE

IG — 12O VOLT, ISOLATED GROUND TYPE DUPLEX RECEPTACLE

SPECIAL USE RECEPTACLE, TYPE AS NOTED ON DRAWINGS

PROVIDE JBOX FOR TELECOMM OUTLETS SIZED AS NOTED & COVERED BY BLANKOFF. ROUTE 1" CONDUIT W/PULLSTRINGS FROM JBOX INSIDE WALL AND ABOVE CEILING, TO TERMINATE WITHIN 6LF OF THE ABOVE CEILING CABLE TRAY. PROVIDE BUSHING ON END OF CONDUIT.

TELEPHONE OUTLET, MOUNT AS NOTED

DATA OUTLET, MOUNT AS NOTED

COMBINATION DATA/TELEPHONE OUTLET, MOUNT AS NOTED.

TELEVISION OUTLET, MOUNT AS NOTED

FEEDER SCHEDULE (600 V)

FEEDER AMPACITY	CONDUCTOR SIZE (kcmil)		CONDUIT SIZE	
	Ø & N	GRD	3Ø & GRD.	3Ø & N & GRD.
20	#12	#12	3/4"	3/4"
30	#10	#10	3/4"	3/4"
40	#8	#10	3/4"	1"
50	#6	#8	1"	1"
70	#4	#8	1-1/4"	1-1/4"
80	#3	#8	1-1/4"	1-1/4"
100	#1	#8	1-1/2"	2"
110	#2	#6	1-1/2"	1-1/2"
125	#1	#6	1-1/2"	2"
150	#1/0	#6	1-1/2"	2"
175	#2/0	#6	2"	2"
200	#3/0	#6	2"	2-1/2"
225	#4/0	#4	2"	2-1/2"
250	#250	#4	2-1/2"	3"
300	#250	#4	3"	3"
350	#500	#3	3"	3-1/2"
380	#500	#3	3"	3-1/2"
400	(2) #3/0	(2) #3	(2) 2"	(2) 2-1/2"
450	(2) #4/0	(2) #2	(2) 2"	(2) 2-1/2"
500	(2) #250	(2) #2	(2) 2-1/2"	(2) 3"
600	(2) #350	(2) #1	(2) 3"	(2) 3"
700	(2) #500	(2) #1/0	(2) 3"	(2) 3-1/2"
800	(2) #600	(2) #1/0	(2) 3-1/2"	(2) 4"
1000	(3) #400	(3) #2/0	(3) 3"	(3) 3-1/2"
1200	(3) #600	(3) #3/0	(3) 3-1/2"	(3) 4"
1600	(4) #600	(4) #4/0	(4) 3-1/2"	(5) 4"
2000	(5) #600	(5) #250	(5) 3-1/2"	(5) 4"

GENERAL NOTES:

A. THE ABOVE FEEDER SCHEDULE IS A SCHEDULE OF TYPICAL FEEDS AND SOME SIZES MAY NOT BE UTILIZED.
B. CONDUIT FOR FEEDERS UTILIZING MULTI-CONDUCTOR CABLING (SUCH AS SHIELDED AFD CABLE) SHALL BE SIZED BASED ON ACTUAL CABLE SPECIFICATIONS.
C. ALL CONDUCTOR AMPACITIES ARE BASED ON TABLE 310-16 OF THE NEC FOR COPPER CONDUCTOR TYPE THW/THWN.
D. FEEDER SIZES SHOWN ON THE RISER DIAGRAM INDICATE FEEDER AMPACITIES AND DO NOT NECESSARILY CORRESPOND TO CIRCUIT BREAKER AMPACITIES. CERTAIN FEEDERS MAY BE SIZED FOR THE DURATION FACTORS REQUIRED BY CODE AND/ OR ARE OVERSIZED FOR VOLTAGE DROP.
E. WHERE MULTIPLE CONDUITS ARE INDICATED FOR A SINGLE FEEDER EACH CONDUIT SHALL CONTAIN AN AØ, BØ, CØ, GROUND CONDUCTOR, AND NEUTRAL CONDUCTOR.

200-4G
FEEDER DESIGNATION
SYSTEM DESCRIPTION
(2G) 1Ø, 2W + GRD
(3G) 3Ø, 3W + GRD
(4G) 3Ø, 4W + GRD
CONDUCTOR AMPACITY
(SEE FEEDERS SCHEDULE)

PROJECT NO.: 00616135	SCALE: AS SHOWN	NO.	DATE	REVISION	BY
PROJECT DATE: 1-10-2020	DRAWN BY: -	.	.	.	.
F.B.: .	CHECKED BY: SCR	.	.	.	.
.	.	.	.	.	.

PLOT DATE: 1/14/20, P:\610s\616\00616135\CADD\Construction Drawings\8-Electrical\00616135 Electrical Symbols and Abbrev 1_2.dwg

I HEREBY CERTIFY THAT THIS PLAN, REPORT, OR SPECIFICATION WAS PREPARED BY ME OR UNDER MY DIRECT SUPERVISION AND THAT I AM A DULY LICENSED PROFESSIONAL ENGINEER UNDER THE LAWS OF THE STATE OF MINNESOTA.

1/10/2020 Date — 44287 License No.
SCOTT R CHILSON

MSA
ENGINEERING | ARCHITECTURE | SURVEYING
FUNDING | PLANNING | ENVIRONMENTAL
332 W Superior Street, Duluth MN 55802
(218) 722-3915 www.msa-ps.com
© MSA Professional Services, Inc.

LIFT STATION 15 RELOCATION
CITY OF DULUTH, MINNESOTA
2114 W MICHIGAN STREET

ELECTRICAL SYMBOLS AND ABBREVIATIONS

FILE NO. 00616135
SHEET E-2

INSTRUMENT SOCIETY OF AMERICA INSTRUMENT IDENTIFICATION

	FIRST LETTER(S)		SUCCEEDING LETTERS		
	PROCESS OR INITIATING VARIABLE	MODIFIER	READOUT OR PASSOUT FUNCTION	OUTPUT FUNCTION	MODIFIER
A	ANALYSIS		ALARM		
B	BURNER, COMBUSTION		USER'S CHOICE	USER'S CHOICE	USER'S CHOICE
C	USER'S CHOICE			CONTROL	
D	USER'S CHOICE	DIFFERENTIAL			
E	VOLTAGE		SENSOR (PRIMARY ELEMENT)		
F	FLOW RATE	RATIO(FRACTION)			
G	USER'S CHOICE		GLASS, VIEWING		
H	HAND		DEVICE		HIGH
I	CURRENT		!NDICATE		
J	POWER	SCAN			
K	TIME OR SCHEDULE	TIME RATE OF CHANGE		CONTROL STATION	
L	LEVEL		LIGHT		LOW
M	MOISTURE				
N	TORQUE		USER'S CHOICE	USER'S CHOICE	USER'S CHOICE
O	USER'S CHOICE		ORIFICE, RESTRICTION		
P	PRESSURE (OR VACUUM)		POINT, TEST		
Q	QUANTITY	INTEGRATE	CONNECTION		
R	RADIATION		RECORD		
S	SPEED, FREQUENCY	SAFETY		SWITCH	
T	TEMPERATURE			TRANSMIT	
U	MULTIVARIABLE		MULTIFUNCTION	MULTIFUNCTION	MULTIFUNCTION
V	VIBRATION				
W	WEIGHT, FORCE		WELL		
X	UNCLASSIFIED	X AXIS	UNCLASSIFIED	UNCLASSIFIED	UNCLASSIFIED
Y	EVENT, STATE	Y AXIS		RELAY OR COMPUTE	
Z	POSITION, DIMENSION	Z AXIS		DRIVE ACTUATE OR UNCLASSIFIED FINAL CONTROL ELEMENT	

MOTOR CONTROL CENTER (MCC) SYMBOLS

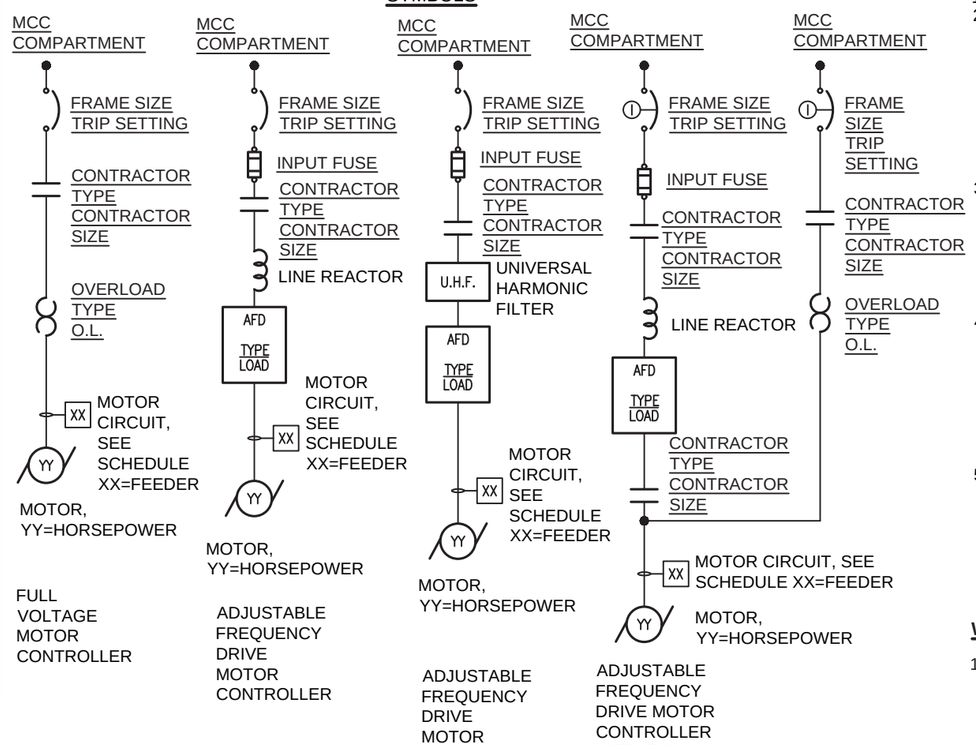

PROCESS NOTES:

1. SIZE CONDUIT PER NEC. MINIMUM SIZE 3/4".
2. PROVIDE SEPARATE CONDUITS FOR THE FOLLOWING:
   a. 4-20mADC
   b. 120 VOLT CONTROL
   c. 120 VOLT POWER
   d. 480 VOLT POWER
   e. LOW VOLTAGE INSTRUMENTATION
   f. COMMUNICATION
3. REFER TO SPECIFICATION 16900 FOR DETAILS ON VARIOUS LOOP FUNCTIONS AS WELL AS DETAILS REGARDING OPERATOR INTERFACE FUNCTIONS.
4. REFER TO DIVISION 11000, 13000, 15000 FOR ADDITIONAL DETAILS REGARDING INSTRUMENTATION AND CONTROL EQUIPMENT FURNISHED UNDER THOSE SPECIFICATIONS.
5. (1) 1-1/2"C REFERS TO NUMBER OF WIRES AND SIZE OF WIRE REQUIRED, WHERE AS:
   (1) = ONE WIRE
   1-1/2"C = THE SIZE OF WIRE REQUIRED

WIRING & CONDUIT (TYPICAL)

1. (X) #12 & #12G
   REFERS TO NUMBER OF WIRE(S) AND SIZE OF WIRE(S) REQUIRED, WHERE AS:
   (1) = ONE WIRE
   #12 = THE SIZE OF WIRE REQUIRED
   G = GROUND WIRE
2. (X) 1-1/2"C
   REFERS TO NUMBER OF CONDUIT(S) AND SIZE OF CONDUIT(S) REQUIRED, WHERE AS:
   (1) = ONE CONDUIT
   1-1/2"C = THE SIZE OF CONDUIT REQUIRED

P&ID SYMBOLS (TYPICAL)

A: DESCRIPTION, TOP LINE
B: DESCRIPTION, BOTTOM LINE
TRS: FIRST LETTER(S) AND SUCCEEDING LETTERS OF INSTRUMENT IDENTIFICATION, REFER TO ISA TABLE
W: UNIT PROCESS NUMBER
X: LOOP NUMBER
Y: UNIT NUMBER, USED FOR MULTIPLE SETS WITH THE SAME X-Y DESIGNATION
Z: SET NUMBER, USED FOR MULTIPLE SETS OF UNITS WITH THE SAME W-X-Y DESIGNATION

N: NUMBER OF UNITS
C: INSTALLATION REQUIREMENT:
XP: CLASS I, DIVISION 1 HAZARDOUS LOCATION
i.s.: INTRINSICALLY SAFE, INSTALLED IN CLASS I, DIVISION 1 HAZARDOUS LOCATION

Q: PROVISION REQUIREMENT:
* : EXISTING, RE-USED EQUIPMENT
** : EQUIPMENT SPECIFIED UNDER DIVISION OTHER THAN 26
*** : FUTURE EQUIPMENT
BLANK : EQUIPMENT SPECIFIED UNDER DIVISION 26

FIELD DEVICE
CONTROL PANEL DEVICE, FRONT-OF-PANEL, NORMALLY ACCESSIBLE
CONTROL PANEL DEVICE, BACK-OF-PANEL, NOT NORMALLY ACCESSIBLE
MCC DEVICE, FRONT-OF-PANEL, NORMALLY ACCESSIBLE
MCC DEVICE, BACK-OF-PANEL, NOT NORMALLY ACCESSIBLE
SOFTWARE DEVICE OR FUNCTION, NORMALLY ACCESSIBLE
SOFTWARE DEVICE OR FUNCTION, NOT NORMALLY ACCESSIBLE
SOFTWARE ALARM FUNCTION, NORMALLY ACCESSIBLE
INTERLOCK FUNCTION, REFER TO SPECIFICATIONS

MS XX — FULL VOLTAGE MOTOR CONTROLLER, XX INDICATES LOCATION

XX (Y) — NETWORK (DEVICENET, ETC) CONTROL SYSTEM INPUT/OUTPUT POINT WHERE Y=QUANTITY AND XX
DI: DIGITAL INPUT
DI: DIGITAL OUTPUT
AI: ANALOG INPUT
AO: ANALOG OUTPUT

XX YY — MOTOR CONTROLLER, XX INDICATES TYPE OF CONTROLLER AND YY INDICATES LOCATION

XX (Y) — PROGRAMMABLE LOGIC CONTROLLER INPUT/OUTPUT POINT WHERE Y=QUANTITY AND XX
DI: DIGITAL INPUT
DI: DIGITAL OUTPUT
AI: ANALOG INPUT
AO: ANALOG OUTPUT

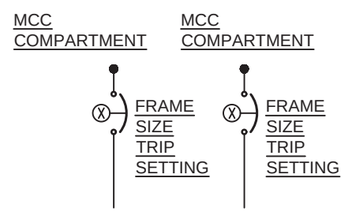

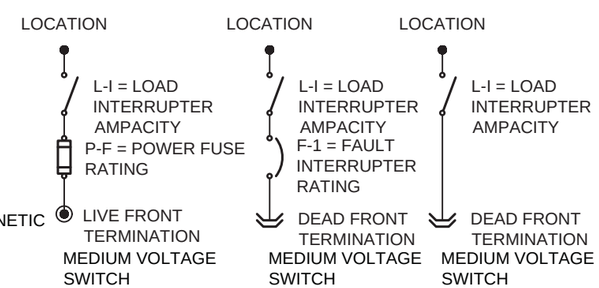

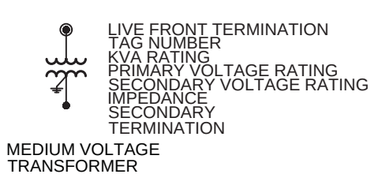

NON-CONNECTING LINES
CONNECTING LINES
(2) — PARALLEL LINES (PARENTHETICAL NUMBER INDICATES THE NUMBER OF SIGNALS REPRESENTED)

SOFTWARE SIGNAL/FUNCTION
A — ANALOG SIGNAL, 4-20mADC OR PULSE FREQUENCY
PF — PULSE FREQUENCY
DISCRETE SIGNAL, DRY CONTACT
M — MANUFACTURER'S SIGNAL
PNEUMATIC SIGNAL
MAJOR PROCESS
MINOR PROCESS

LINETYPE LEGEND

Ax = 2C#16 SHIELDED, TWISTED PAIR CABLE
Dx = #14 THHN WIRE (x = NUMBER OF WIRES)
Mx = 1" CONDUIT FOR CABLE SUPPLIED BY MANUFACTURER BY MFG. (x=NUMBER OF CONDUITS)
Ex = 3/4" CONDUIT AND CAT5e(x) CABLE(S) (x = NUMBER OF CABLES)
FO = CONDUIT AND FIBER OPTIC CABLE

PROJECT NO.: 00616135	SCALE: AS SHOWN	NO.	DATE	REVISION	BY
PROJECT DATE: 1-10-2020	DRAWN BY: -	.	.	.	.
F.B. : .	CHECKED BY: SCR	.	.	.	.
.	.	.	.	.	.

PLOT DATE: 1/14/20, P:\610s\616\00616135\CADD\Construction Drawings\8-Electrical\00616135 Electrical Symbols and Abbrev 3.dwg

I HEREBY CERTIFY THAT THIS PLAN, REPORT, OR SPECIFICATION WAS PREPARED BY ME OR UNDER MY DIRECT SUPERVISION AND THAT I AM A DULY LICENSED PROFESSIONAL ENGINEER UNDER THE LAWS OF THE STATE OF MINNESOTA.

1/10/2020 — Date
44287 — License No.
SCOTT R CHILSON

MSA
ENGINEERING | ARCHITECTURE | SURVEYING
FUNDING | PLANNING | ENVIRONMENTAL
332 W Superior Street, Duluth MN 55802
(218) 722-3915 www.msa-ps.com
© MSA Professional Services, Inc.

LIFT STATION 15 RELOCATION
CITY OF DULUTH, MINNESOTA
2114 W MICHIGAN STREET

ELECTRICAL SYMBOLS AND ABBREVIATIONS

FILE NO. 00616135
SHEET E-3

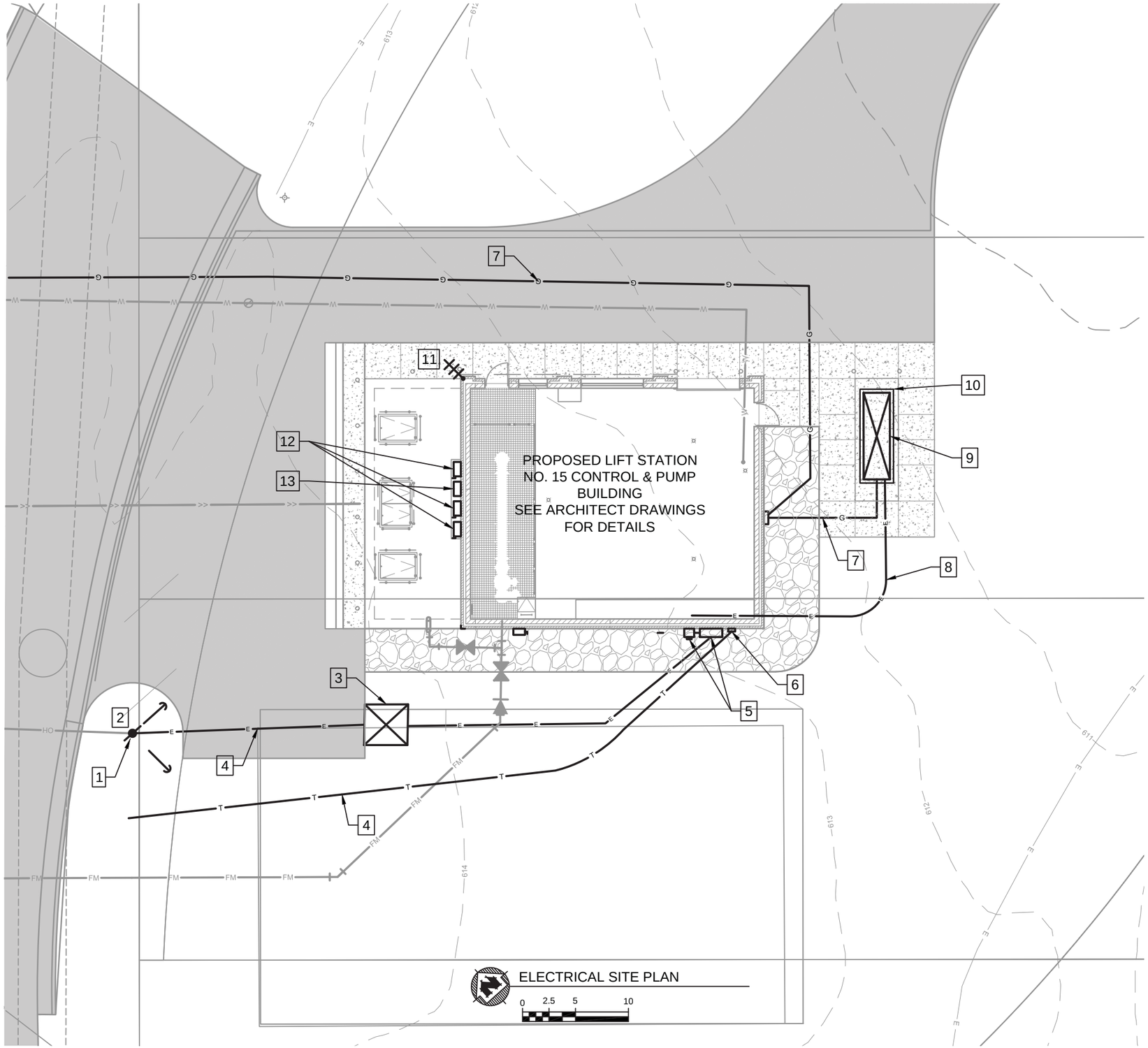

KEYNOTES: X

1. APPROXIMATE LOCATION OF UTILITY POLE. COORDINATE FINAL LAYOUT AND LOCATION WITH UTILITY.
2. PROVIDE SERVICE DROP PER UTILITY REQUIREMENTS
3. PROVIDE UTILITY APPROVED CONCRETE TRANSFORMER PAD. FURNISH PER UTILITY REQUIREMENTS. CONFIRM LOCATION/LAYOUT W/UTILITY (TYP).
4. PROPOSED BURIED SERVICE PER UTILITY REQUIREMENTS AND UTILITY ALLOWANCE. REFER TO ONE-LINE DIAGRAM.
5. CUSTOM PAINTED UTILITY APPROVED CT CABINET AND METER SOCKET.
6. TELCO NID
7. FURNISH AND COORDINATE NG SERVICE AND SUPPLY TO GENERATOR. PROVIDE NG SUPPLY TO GENERATOR 3" MIN. COORDINATE WITH VENDOR AND DIV. 22.
8. APPROXIMATE LOCATION OF GENERATOR FEEDERS
9. INSTALL OWNER SUPPLIED STAND-BY NATURAL GAS FUELED ENGINE GENERATOR. CONNECT LS15-GCP-1, BLOCK HEATER, BATTERY CHARGER, BATTERY HEATER, CONVENIENCE REC, ENCLOSURE LIGHTS, AND OTHER MFR OR SYSTEM REQUIRED DEVICES (TYP).
10. FURNISH CONCRETE BASE (TYP). COORDINATE WITH STRUCTURAL.
11. ANTENNA FOR INTEGRATION INTO CITY SCADA SYSTEM. COORDINATE MOUNTING WITH ARCHITECTURE (TYP).
12. PROVIDE MOTOR DISCONNECT ENCLOSURE (TYP). PROVIDE A MINIMUM OF 42" OF WORKING SPACE IN FRONT OF THE ENCLOSURE.
13. PROVIDE INSTRUMENT JUNCTION BOX - LS15-INS-1 (TYP)

GENERAL NOTES:
(SEE PROJECT GENERAL NOTES)

PROJECT NO.: 00616135	SCALE: AS SHOWN	NO.	DATE	REVISION	BY
PROJECT DATE: 1-10-2020	DRAWN BY:				
F.B.:	CHECKED BY: SCR				
PLOT DATE: 1/14/20, P:\610s\616\00616135\CADD\Construction Drawings\8-Electrical\00616135 Electrical Site Plan.dwg					

I HEREBY CERTIFY THAT THIS PLAN, REPORT, OR SPECIFICATION WAS PREPARED BY ME OR UNDER MY DIRECT SUPERVISION AND THAT I AM A DULY LICENSED PROFESSIONAL ENGINEER UNDER THE LAWS OF THE STATE OF MINNESOTA.

1/10/2020 Date — 44287 License No.

SCOTT R CHILSON

MSA
ENGINEERING | ARCHITECTURE | SURVEYING
FUNDING | PLANNING | ENVIRONMENTAL
332 W Superior Street, Duluth MN 55802
(218) 722-3915 www.msa-ps.com
© MSA Professional Services, Inc.

LIFT STATION 15 RELOCATION
CITY OF DULUTH, MINNESOTA
2114 W MICHIGAN STREET

ELECTRICAL SITE PLAN

FILE NO. 00616135
SHEET E-4

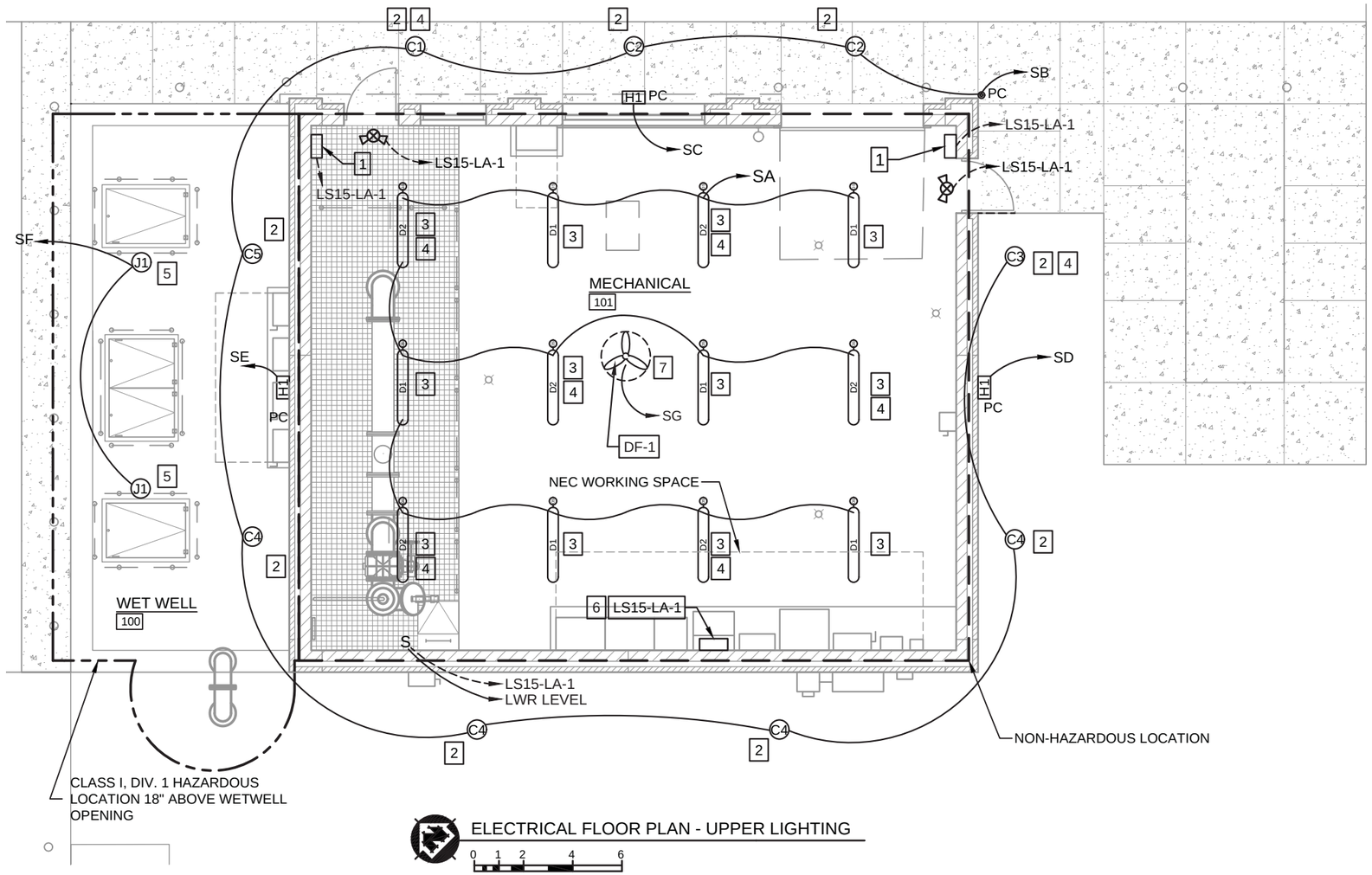

ELECTRICAL FLOOR PLAN - UPPER LIGHTING

0 1 2 4 6

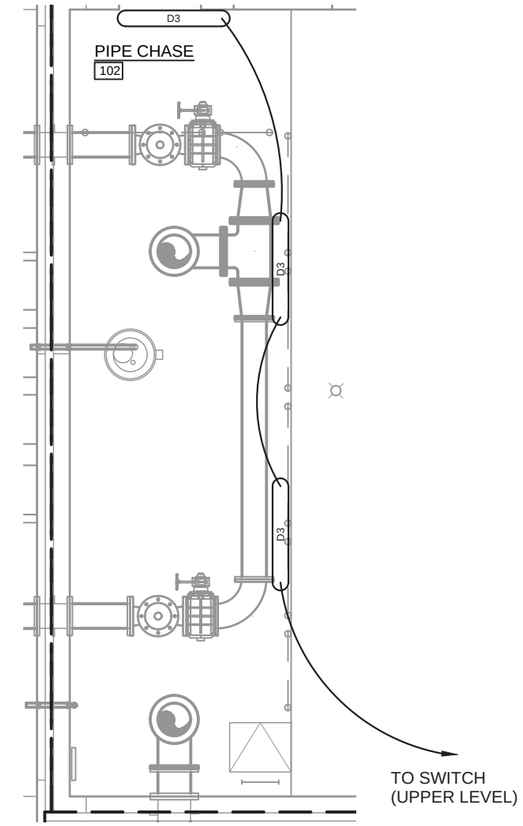

ELECTRICAL FLOOR PLAN - LOWER LIGHTING

0 1 2 4 6

KEYNOTES:

1. PROVIDE SWITCH BOX FOR LIGHT & FAN SWITCHES:
   - S_3A - INTERIOR LIGHTS
   - S_3B - EXTERIOR SOFFIT LIGHTS
   - S_3C - N.E. EXTERIOR WALLPACK
   - S_3D - S.E. EXTERIOR WALLPACK
   - S_3E - N.W. EXTERIOR WALLPACK
   - S_3F - WETWELL LIGHTS
   - S_3G - FAN DF-1
2. MOUNT IN SOFFIT
3. SURFACE MOUNT (TYP)
4. PROVIDE BATTERY BACKUP
5. MOUNT TO BOTTOM OF WETWELL DECK
6. LIGHTING PANEL BOARD, LS15-LA-1
7. PROVIDE SUFFICIENT CLEARANCE BETWEEN LIGHT FIXTURES AND FAN

GENERAL NOTES:

A. EXTERIOR LUMINARIES AND FIXTURE SHALL BE WIRED IN SERIES WITH SWITCH AND PHOTOCELL.

B. INTERIOR LED FIXTURES SHALL BE WIRED IN PARALLEL WITH SWITCH AND OCCUPANCY SENSORS IN ORDER TO OVERRIDE THE OCCUPANCY SENSORS WHEN DESIRED.

C. INTERIOR LIGHT SWITCHES SHALL BE INSTALLED 42" AFF, UNLESS OTHERWISE NOTED.

D. CONTRACTOR SHALL COORDINATE INSTALLATION OF LIGHTING FIXTURE SO TO AVOID OBSTRUCTION OF HVAC AND PROCESS EQUIPMENT.

E. REFER TO ARCHITECTURAL ELEVATION FOR LOCATION OF EXTERIOR FIXTURES.

(ALSO SEE PROJECT GENERAL NOTES)

LEGEND:

S	WALL SWITCH
C	6" RECESSED LED LIGHT
J1	XP LED FIXTURE
H1	EXTERIOR LED WALL PACK
PC	PHOTO CELL
D1	INTERIOR LED W/OCCUPANCY SENSOR
D2	INTERIOR LED W/OCCUPANCY SENSOR AND BATTERY BACKUP
D3	INTERIOR LED W/ BATTERY BACKUP, WALL MOUNTED
	EXIT SIGN WITH LIGHTS

NOTE: REFER TO SCHEDULES AND DETAILS FOR MORE INFORMATION

PROJECT NO.:	00616135	SCALE: AS SHOWN	NO.	DATE	REVISION	BY
PROJECT DATE:	1-10-2020	DRAWN BY: -	.	.	.	.
F.B. :	.	CHECKED BY: SCR	.	.	.	.
.		.	.	.	.	.

PLOT DATE: 1/14/20, P:\610s\616\00616135\CADD\Construction Drawings\8-Electrical\00616135 Electrical Floor Plan.dwg

I HEREBY CERTIFY THAT THIS PLAN, REPORT, OR SPECIFICATION WAS PREPARED BY ME OR UNDER MY DIRECT SUPERVISION AND THAT I AM A DULY LICENSED PROFESSIONAL ENGINEER UNDER THE LAWS OF THE STATE OF MINNESOTA.

1/10/2020 Date — 44287 License No.

SCOTT R CHILSON

MSA

ENGINEERING | ARCHITECTURE | SURVEYING
FUNDING | PLANNING | ENVIRONMENTAL
332 W Superior Street, Duluth MN 55802
(218) 722-3915 www.msa-ps.com

© MSA Professional Services, Inc.

LIFT STATION 15 RELOCATION
CITY OF DULUTH, MINNESOTA
2114 W MICHIGAN STREET

LIGHTING PLAN

FILE NO. 00616135

SHEET E-5

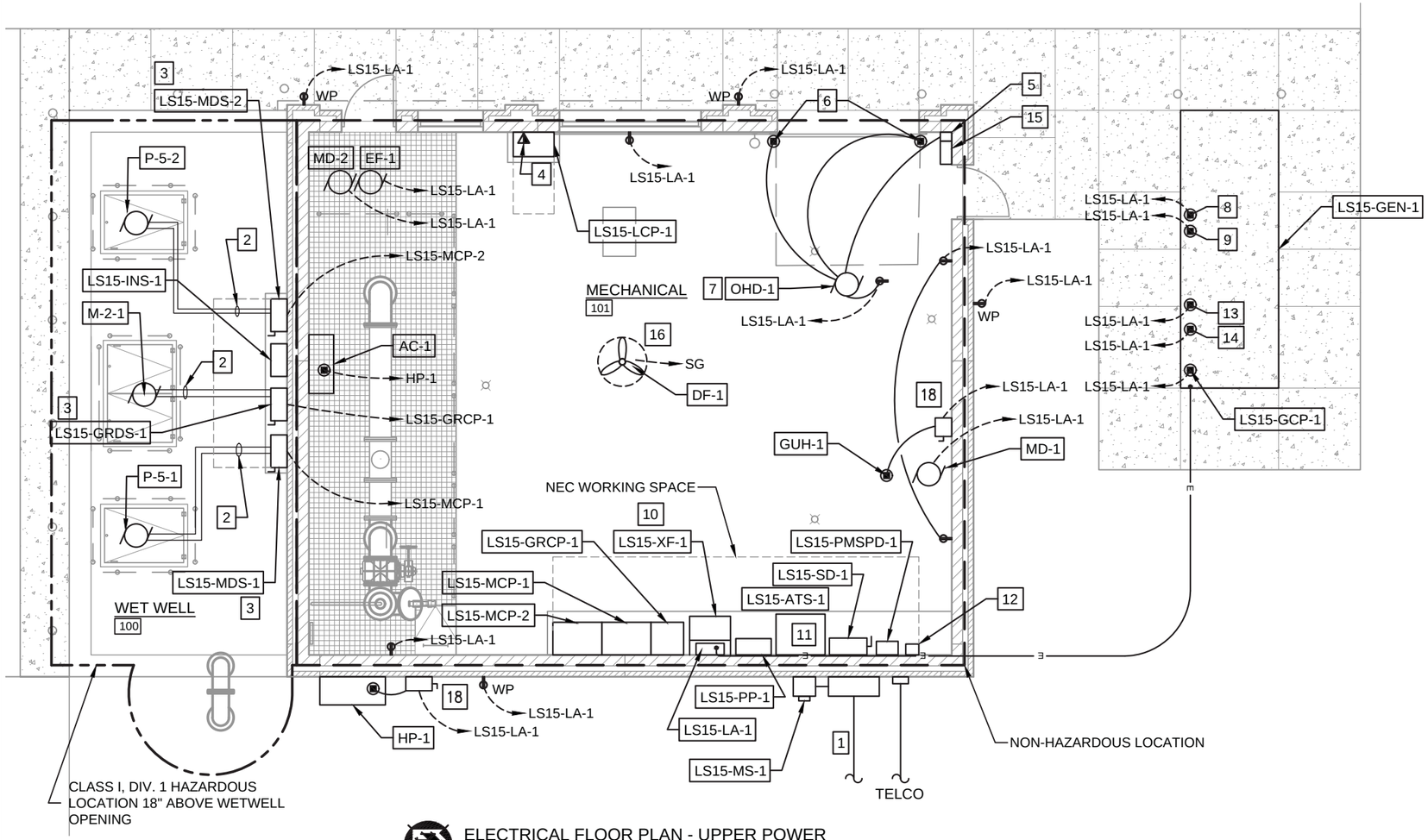

ELECTRICAL FLOOR PLAN - UPPER POWER

0 1 2 4 6

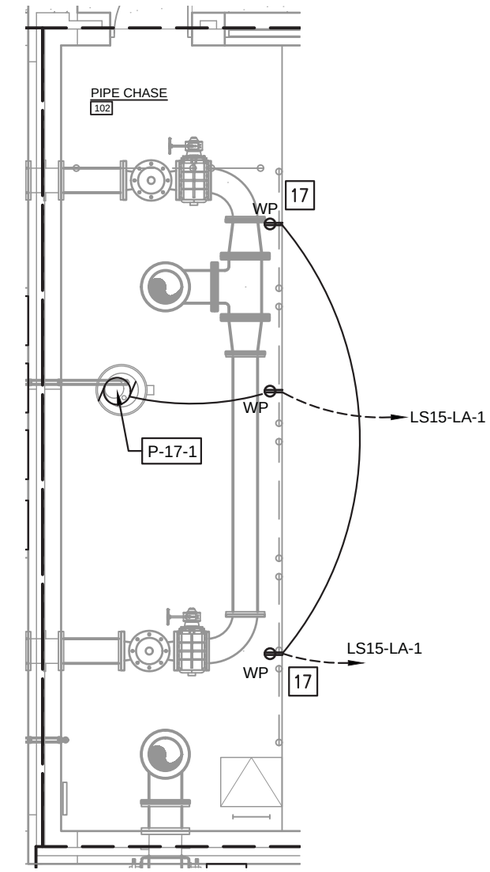

ELECTRICAL FLOOR PLAN - LOWER POWER

0 1 2 4 6

KEYNOTES:

1. APPROXIMATE LOCATION OF DUCT BANK. COORDINATE WITH SITE CONTRACTOR.
2. PROVIDE AND MOUNT PUMP CABLE SLEEVES TO THE BOTTOM OF THE WETWELL DECK (TYP).
3. PROVIDE MOTOR DISCONNECT ENCLOSURE (TYP). ALLOW A MINIMUM OF 42" WORKING SPACE IN FRONT OF THE ENCLOSURE.
4. HOME RUN (2) CAT6E CABLES TO PUNCH DOWN DATA PANEL.
5. PROVIDE CONTROL STATION
6. PROVIDE DOOR SENSORS
7. FLUSH MOUNT IN CEILING
8. GENERATOR BLOCK HEATER
9. GENERATOR BATTERY CHARGER
10. PROVIDE AND MOUNT TRANSFORMER W/ WALL BRACKET.
11. PROVIDE ATS IN A 2ND ENCLOSURE AS SPECIFIED AND SCHEDULED.
12. PROVIDE 110 PUNCH DOWN BLOCK IN NEMA 1 ENCLOSURE
13. GENERATOR RECEPTACLE
14. GENERATOR ENCLOSURE LIGHT
15. PROVIDE SWITCH BOX FOR SWITCHES AND FAN (SEE LIGHTING PLAN, SHEET E-5)
16. PROVIDE SUFFICIENT CLEARANCE BETWEEN LIGHT FIXTURES AND FAN
17. MOUNT LOWER LEVEL RECEPTACLES AT 48"AFF
18. INSTALL DISCONNECT FURNISHED BY HVAC CONTRACTOR

GENERAL NOTES:

A. DISCONNECTS RELATED TO HVAC AND PLUMBING SHALL BE INSTALLED BY THE EC.

B. ALL RECEPTACLES TO BE GFCI TYPE, UNLESS OTHERWISE NOTED. RECEPTACLES MARKED "WP" SHALL HAVE METALLIC WEATHER AND WATER RESISTANT EXTERIOR COVERS.

C. ALL RECEPTACLES SHALL BE MOUNTED AT 18" AFF. UNLESS OTHERWISE NOTED.

D. DATA AND VOICE JACKS SHALL BE MOUNTED AT 54" AFF.

E. CONTRACTOR SHALL COORDINATE INSTALLATION OF POWER AND INSTRUMENTATION EQUIPMENT SO TO AVOID OBSTRUCTION OF HVAC AND PROCESS EQUIPMENT.

F. PENETRATIONS THROUGH THE LOWER WALL TO THE WETWELL SHOULD BE AVOIDED. ALL PENETRATIONS TO BE GAS TIGHT.

(ALSO SEE PROJECT GENERAL NOTES)

LEGEND:

- GFI RECEPTACLE (SEE NOTE B)
- WP WEATHERPROOF/GFI RECEPTACLE (SEE NOTE B)
- DATA JACK
- CONNECTION POINT FOR ELECTRICAL DEVICE
- MOTOR

PROJECT NO.: 00616135	SCALE: AS SHOWN	NO.	DATE	REVISION	BY
PROJECT DATE: 1-10-2020	DRAWN BY: -	-	-	-	-
F.B.: -	CHECKED BY: SCR	-	-	-	-
-	-	-	-	-	-
PLOT DATE: 1/14/20, P:\610s\616\00616135\CADD\Construction Drawings\8-Electrical\00616135 Electrical Floor Plan.dwg					

I HEREBY CERTIFY THAT THIS PLAN, REPORT, OR SPECIFICATION WAS PREPARED BY ME OR UNDER MY DIRECT SUPERVISION AND THAT I AM A DULY LICENSED PROFESSIONAL ENGINEER UNDER THE LAWS OF THE STATE OF MINNESOTA.

1/10/2020 Date — 44287 License No.

SCOTT R CHILSON

MSA

ENGINEERING | ARCHITECTURE | SURVEYING
FUNDING | PLANNING | ENVIRONMENTAL
332 W Superior Street, Duluth MN 55802
(218) 722-3915 www.msa-ps.com

© MSA Professional Services, Inc.

LIFT STATION 15 RELOCATION
CITY OF DULUTH, MINNESOTA
2114 W MICHIGAN STREET

POWER PLAN

FILE NO. 00616135

SHEET E-6

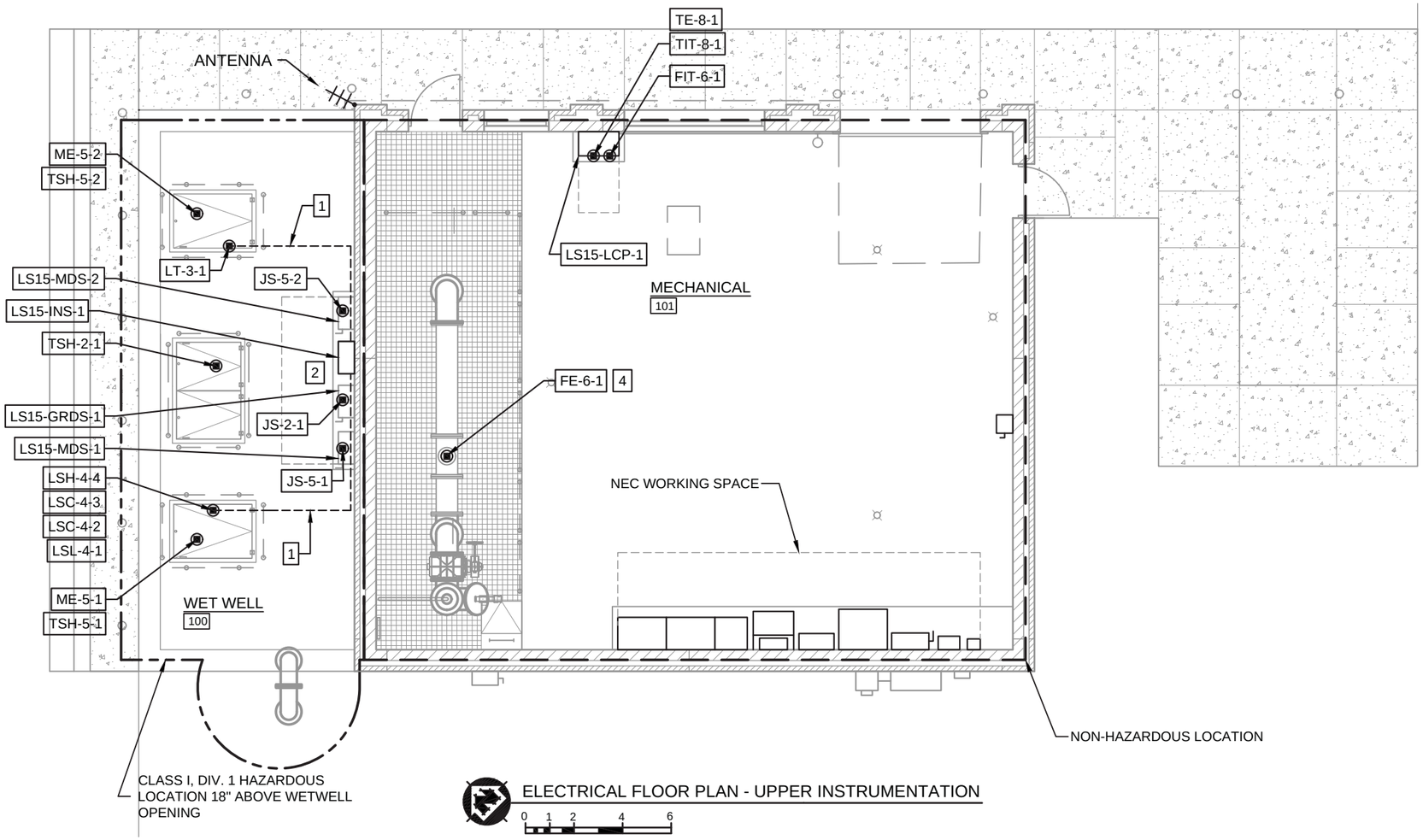

ELECTRICAL FLOOR PLAN - UPPER INSTRUMENTATION

0 1 2 4 6

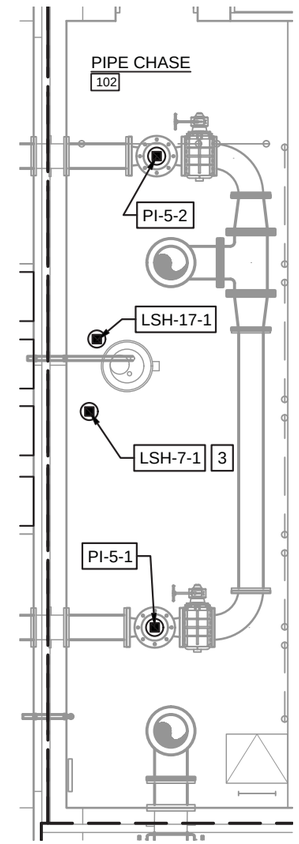

ELECTRICAL FLOOR PLAN - LOWER INSTRUMENTATION

0 1 2 4 6

KEYNOTES:

1. SIGNAL AND POWER CONNECTIONS TO INSTRUMENTS. PROVIDE AND MOUNT INSTRUMENT SLEEVE TO THE BOTTOM OF THE WETWELL DECK (TYP).
2. PROVIDE ENCLOSURE FOR SIGNAL AND POWER CONNECTIONS TO INSTRUMENTS (TYP)
3. DRY WELL FLOAT SWITCH (TYP)
4. PROVIDE ELECTROMAGNETIC FLOW METER (TYP)

GENERAL NOTES:

A. REFER TO INSTRUMENTATION DEVICE SCHEDULE ON SCHEDULE SHEET FOR WIRING REQUIREMENTS.

B. CONTRACTOR SHALL COORDINATE INSTALLATION OF POWER AND INSTRUMENTATION EQUIPMENT SO TO AVOID OBSTRUCTION OF HVAC AND PROCESS EQUIPMENT.

C. PENETRATIONS THROUGH THE LOWER WALL TO THE WETWELL SHOULD BE AVOIDED. ALL PENETRATIONS TO BE GAS TIGHT.

(ALSO SEE PROJECT GENERAL NOTES)

PROJECT NO.: 00616135	SCALE: AS SHOWN	NO.	DATE	REVISION	BY
PROJECT DATE: 1-10-2020	DRAWN BY: -	.	.	.	.
F.B.: .	CHECKED BY: SCR	.	.	.	.
.	.	.	.	.	.

PLOT DATE: 1/14/20, P:\610s\616\00616135\CADD\Construction Drawings\8-Electrical\00616135 Electrical Floor Plan.dwg

I HEREBY CERTIFY THAT THIS PLAN, REPORT, OR SPECIFICATION WAS PREPARED BY ME OR UNDER MY DIRECT SUPERVISION AND THAT I AM A DULY LICENSED PROFESSIONAL ENGINEER UNDER THE LAWS OF THE STATE OF MINNESOTA.

1/10/2020 Date — 44287 License No.

SCOTT R CHILSON

MSA

ENGINEERING | ARCHITECTURE | SURVEYING
FUNDING | PLANNING | ENVIRONMENTAL
332 W Superior Street, Duluth MN 55802
(218) 722-3915 www.msa-ps.com

© MSA Professional Services, Inc.

LIFT STATION 15 RELOCATION
CITY OF DULUTH, MINNESOTA
2114 W MICHIGAN STREET

INSTRUMENTATION PLAN

FILE NO. 00616135

SHEET E-7

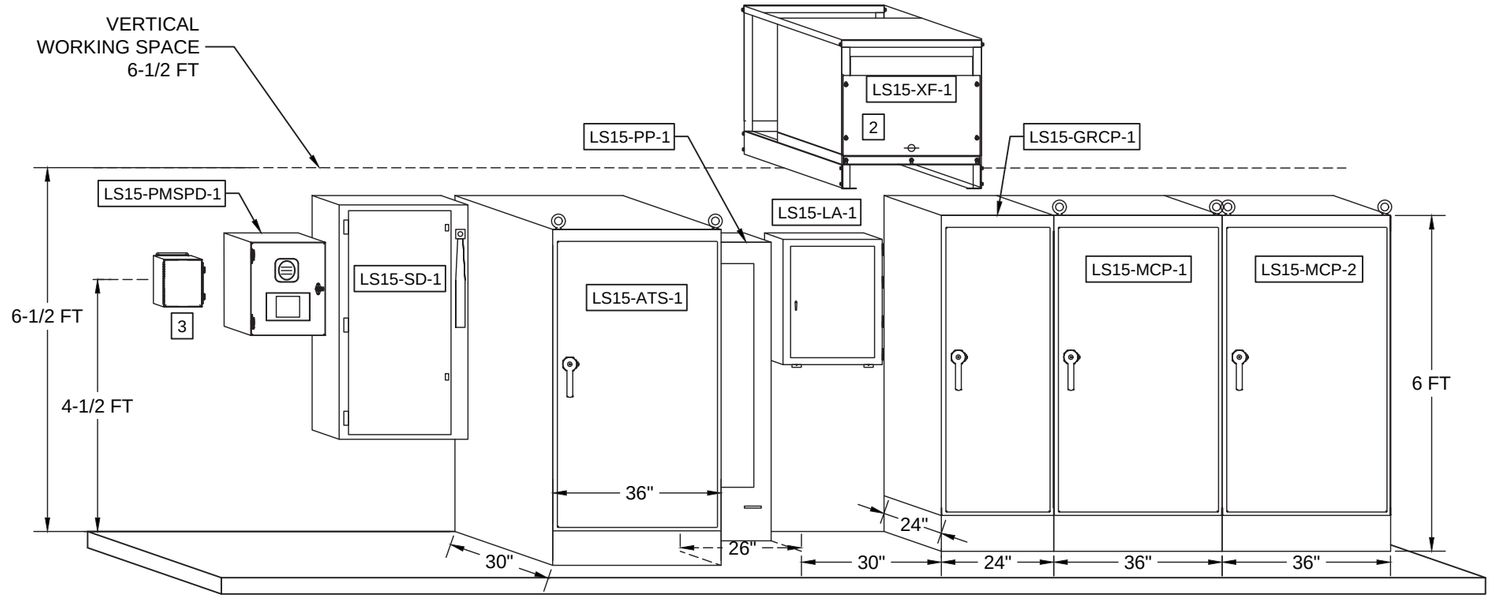

1 E-8 ELECTRICAL EQUIPMENT PANEL LAYOUT (TYPICAL) 1

N.T.S

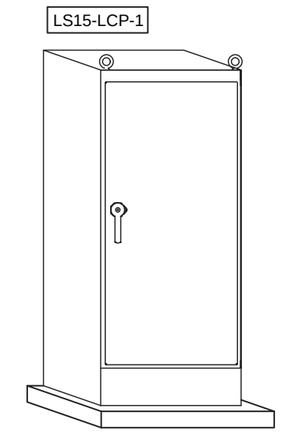

2 E-8 LOCAL CONTROL PANEL LAYOUT (TYPICAL) 1

N.T.S

KEYNOTES:

1. SPECIFIED SIZE INDICATES THE PHYSICAL SIZE ANTICIPATED BY THE ENGINEER. CONTRACTOR SHALL VERIFY ACTUAL SIZE WITH SYSTEM INTEGRATOR AND ADJUST INSTALLATION ACCORDINGLY. LAYOUTS ARE TYPICAL.
2. INSTALL TRANSFORMER ABOVE 6.5FT VERTICAL WORKING SPACE. PROVIDE AND MOUNT TRANSFORMER WITH WALL BRACKET SO THAT CONDUITS CAN RUN DOWN THE WALL TO THE PANEL BOARD.
3. PROVIDE 110 PUNCHDOWN BLOCK IN NEMA 1 ENCLOSURE

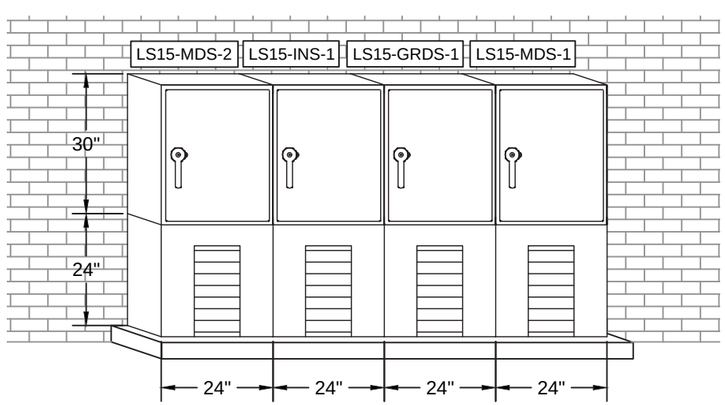

3 E-8 MOTOR & INSTRUMENT J-BOX LAYOUT (TYPICAL) 1

N.T.S

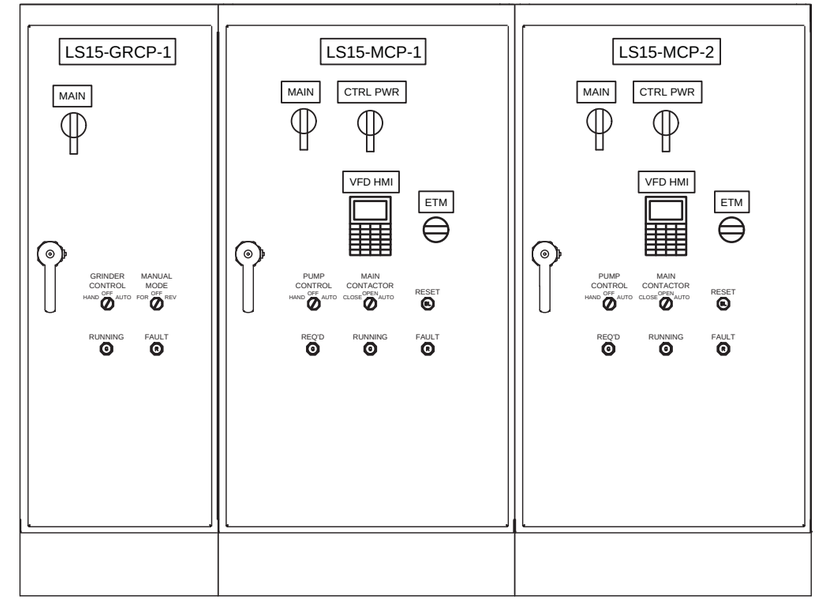

4 E-8 MOTOR CONTROL FRONT PANEL LAYOUT (TYPICAL) 1

N.T.S

PROJECT NO.: 00616135	SCALE: AS SHOWN	NO.	DATE	REVISION	BY
PROJECT DATE: 1-10-2020	DRAWN BY: -	.	.	.	.
F.B. : .	CHECKED BY: SCR	.	.	.	.
.	.	.	.	.	.

PLOT DATE: 1/14/20. P:\610s\616\00616135\CADD\Construction Drawings\8-Electrical\00616135 PANEL ELEVATION.dwg

I HEREBY CERTIFY THAT THIS PLAN, REPORT, OR SPECIFICATION WAS PREPARED BY ME OR UNDER MY DIRECT SUPERVISION AND THAT I AM A DULY LICENSED PROFESSIONAL ENGINEER UNDER THE LAWS OF THE STATE OF MINNESOTA.

1/10/2020 Date — 44287 License No.

SCOTT R CHILSON

MSA

ENGINEERING | ARCHITECTURE | SURVEYING
FUNDING | PLANNING | ENVIRONMENTAL
332 W Superior Street, Duluth MN 55802
(218) 722-3915 www.msa-ps.com

© MSA Professional Services, Inc.

LIFT STATION 15 RELOCATION
CITY OF DULUTH, MINNESOTA
2114 W MICHIGAN STREET

PANEL ELEVATION

FILE NO. 00616135

SHEET E-8

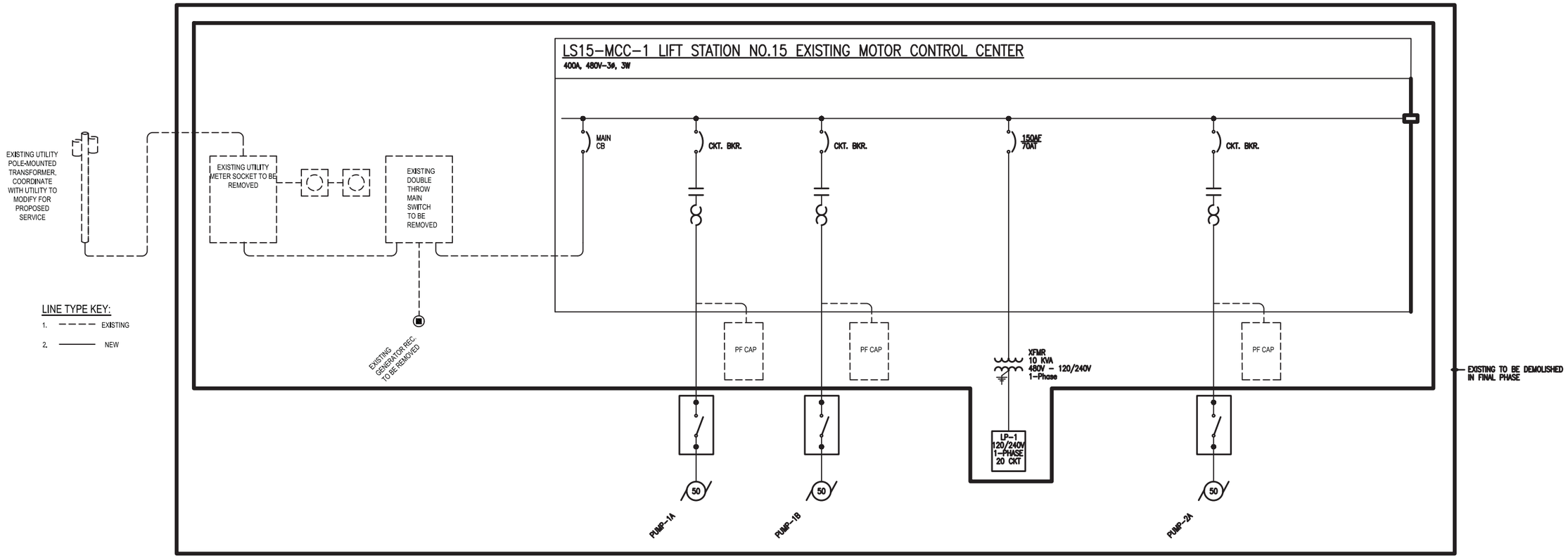

LIFT STATION NO.15 EXISTING ONE-LINE DIAGRAM

NTS

LIFT STATION ELECTRICAL REQUIREMENTS:

1. UTILITY POLE-MOUNTED TRANSFORMER: SERVICE IMPROVEMENTS TO BE COORDINATED BY THIS CONTRACT. ALL WORK SHALL COMPLY TO UTILITY REQUIREMENTS FOR UTILITY. UTILITY TRANSFORMERS SHALL REPLACED AS SCHEDULED.
2. OVERHEAD UTILITY SERVICE: TO BE ABANDONED AND REPLACED WITH UNDERGROUND FEEDER TO PROPOSED UTILITY SERVICE. PROVIDE CONDUITS FOR UTILITY INSTALLATION OF SERVICE LATERAL CONDUCTORS AS SCHEDULED.
3. EXISTING METER SOCKET: TO REMOVED COMPLETE PER UTILITY REQUIREMENTS.
4. EXISTING SERVICE ENTRANCE CIRCUIT: DOUBLE THROW SWITCH TO BE REMOVED AND ABANDONED.
5. GENERATOR CIRCUIT: TO BE REMOVED, REC. TO TURNED OVER TO OWNER.
6. LIFT STATION CONTROL PANEL COMPONENTS: PROVIDE LIFT STATION CONTROL PANEL INTERNAL COMPONENTS AS SCHEDULED.
7. EXISTING PUMP MOTOR CONTROLLER: TO BE REMOVED.
8. EXISTING LOAD CENTER AND POWER SYSTEM: TO BE REMOVED.
9. EXISTING LEVEL CONTROL DEVICES: TO BE REMOVED.
10. EXISTING PUMP RTM PANEL: TO BE REMOVED AND TURNED OVER TO OWNER.
11. EXISTING PUMP CONTROLLER AND RTU: TO BE REMOVED AND TURNED OVER TO THE OWNER.
12. TELEPHONE SERVICE: TO BE RELOCATED TO PROPOSED PANEL.
13. EXISTING LOWER LEVEL FLOOD SWITCH: TO BE REPLACED.
14. EXISTING PUMP CIRCUITS: TO BE REMOVED.
15. EXISTING EJECTOR PUMP: TO BE REPLACED.
16. EXISTING UPPER AND LOWER LEVEL LIGHTS: EXISTING CIRCUITS TO REMOVED, LIGHT TO REMAIN AND TO BE REWIRED TO PROPOSED PANEL.

GENERAL NOTES:

A. EFFORT WAS MADE IN THE PREPARATION OF THE CONTRACT DOCUMENTATION TO COORDINATE CONNECTIONS WITH ALL DISCIPLINES, HOWEVER THE EC IS RESPONSIBLE TO REVIEW ENTIRE PLANS AND THE SPECIFICATIONS AND INCLUDE ALL WORK REQUIRED TO PROVIDE A COMPLETE PROJECT.

B. COORDINATE EXACT LOCATION OF ALL EQUIPMENT WITH GC, OWNER, AND ENGINEER PRIOR TO ROUGH-IN. ALL ITEMS AND DEVICES SHOWN ARE FOR GENERAL INTENT AND CLARITY. ACTUAL LAYOUT AND INSTALLATION MAY VARY, BASED ON FIELD CONDITIONS. ALL CHANGES SHALL BE COORDINATED WITH OWNER AND FIELD ENGINEER.

C. CONTRACTOR SHALL ASSIST AND COORDINATE ALL SITE RELATED DEMOLITION (COMPLETE).

D. FURNISH AND INSTALL CONDUIT AND BOXES RELATED TO FUTURE EQUIPMENT AND DEVICES.

E. CONSTRUCTION SHALL BE PERFORMED IN A WORKMANSHIP MANNER AND COMPLY WITH ALL RELEVANT CODES, REGULATIONS, AND GUIDANCE.

F. THE CONTRACTOR AND SCADA CONTRACTOR SHALL FIELD VERIFY EQUIPMENT REQUIREMENTS AND RELOCATE AND REFEED ESSENTIAL EQUIPMENT FOR INTERMEDIATE PUMP SYSTEM.

G. THE CONTRACTOR SHALL DECOMMISSION AND DEMOLISH ALL ITEMS FOLLOWING COMMISSIONING OF THE NEW SYSTEMS. OWNER RESERVED FIRST RIGHT OF REFUSAL FOR ALL EQUIPMENT AND MATERIALS. THE SHALL DISPOSE OF EQUIPMENT AND MATERIALS AT THE END OF THE PROJECT.

PROJECT NO.: 00616135	SCALE: AS SHOWN	NO.	DATE	REVISION	BY
PROJECT DATE: 1-10-2020	DRAWN BY: -	.	.	.	.
F.B.: .	CHECKED BY: SCR	.	.	.	.
.		.	.	.	.

PLOT DATE: 1/14/20, P:\610s\616\00616135\CADD\Construction Drawings\8-Electrical\00616135 ONE LINE DIAGRAM 1.dwg

I HEREBY CERTIFY THAT THIS PLAN, REPORT, OR SPECIFICATION WAS PREPARED BY ME OR UNDER MY DIRECT SUPERVISION AND THAT I AM A DULY LICENSED PROFESSIONAL ENGINEER UNDER THE LAWS OF THE STATE OF MINNESOTA.

1/10/2020 Date

44287 License No.

SCOTT R CHILSON

MSA
ENGINEERING | ARCHITECTURE | SURVEYING
FUNDING | PLANNING | ENVIRONMENTAL
332 W Superior Street, Duluth MN 55802
(218) 722-3915 www.msa-ps.com
© MSA Professional Services, Inc.

LIFT STATION 15 RELOCATION
CITY OF DULUTH, MINNESOTA
2114 W MICHIGAN STREET

ONE-LINE DIAGRAM NO.1

FILE NO. 00616135

SHEET E-9

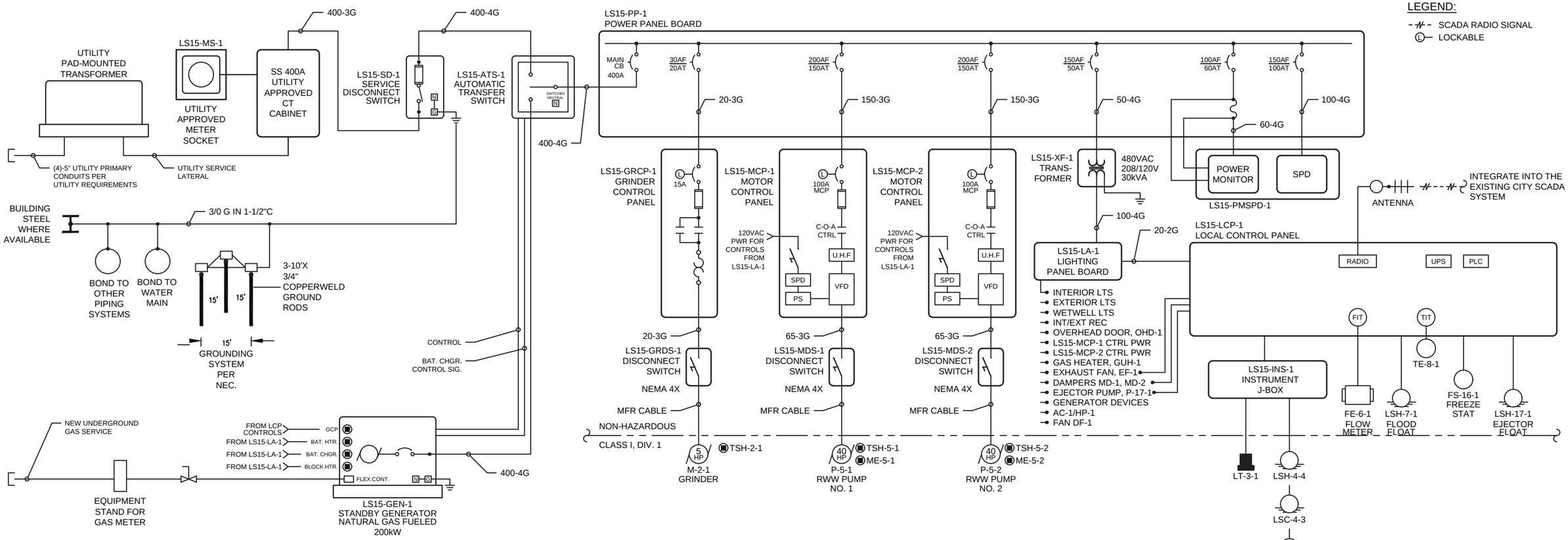

1 E-10 LIFT STATION ONE-LINE DIAGRAM

N.T.S

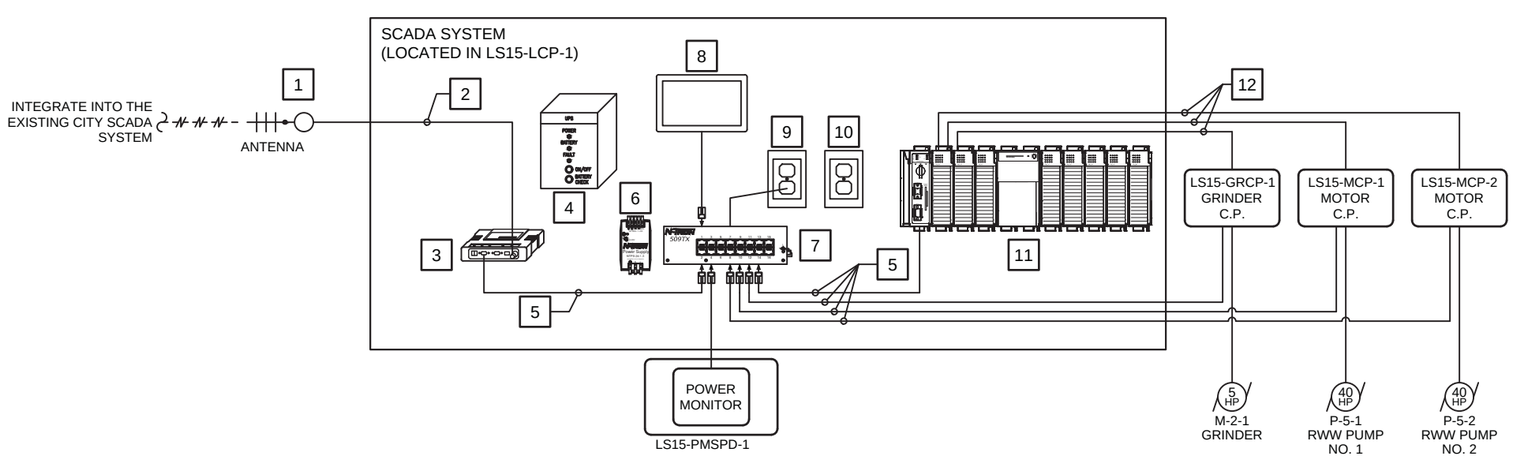

2 E-10 LIFT STATION SCADA OVERVIEW

N.T.S

KEYNOTES:

1. ANTENNA FOR INTEGRATION INTO CITY SCADA SYSTEM
2. 1/2" HELIAX CABLE
3. SCADA RADIO
4. UPS
5. ETHERNET CABLE
6. 24VDC POWER SUPPLY
7. ETHERNET SWITCH
8. AB PANELVIEW 1000+
9. DATA RECEPTACLE
10. RECEPTACLE
11. AB COMPACT LOGIX PLC WITH IO
12. CONTROL SIGNALS

PROJECT NO.:	00616135	SCALE: AS SHOWN	NO.	DATE	REVISION	BY
PROJECT DATE:	1-10-2020	DRAWN BY: -	.	.	.	.
F.B. :	.	CHECKED BY: SCR	.	.	.	.
.	.	.	.	.	.	.

PLOT DATE: 1/14/20, P:\610s\616\00616135\CADD\Construction Drawings\8-Electrical\00616135 ONE LINE.dwg

I HEREBY CERTIFY THAT THIS PLAN, REPORT, OR SPECIFICATION WAS PREPARED BY ME OR UNDER MY DIRECT SUPERVISION AND THAT I AM A DULY LICENSED PROFESSIONAL ENGINEER UNDER THE LAWS OF THE STATE OF MINNESOTA.

1/10/2020 Date — 44287 License No.

SCOTT R CHILSON

MSA

ENGINEERING | ARCHITECTURE | SURVEYING
FUNDING | PLANNING | ENVIRONMENTAL
332 W Superior Street, Duluth MN 55802
(218) 722-3915 www.msa-ps.com

© MSA Professional Services, Inc.

LIFT STATION 15 RELOCATION
CITY OF DULUTH, MINNESOTA
2114 W MICHIGAN STREET

ONE-LINE DIAGRAM NO.2

FILE NO. 00616135

SHEET E-10

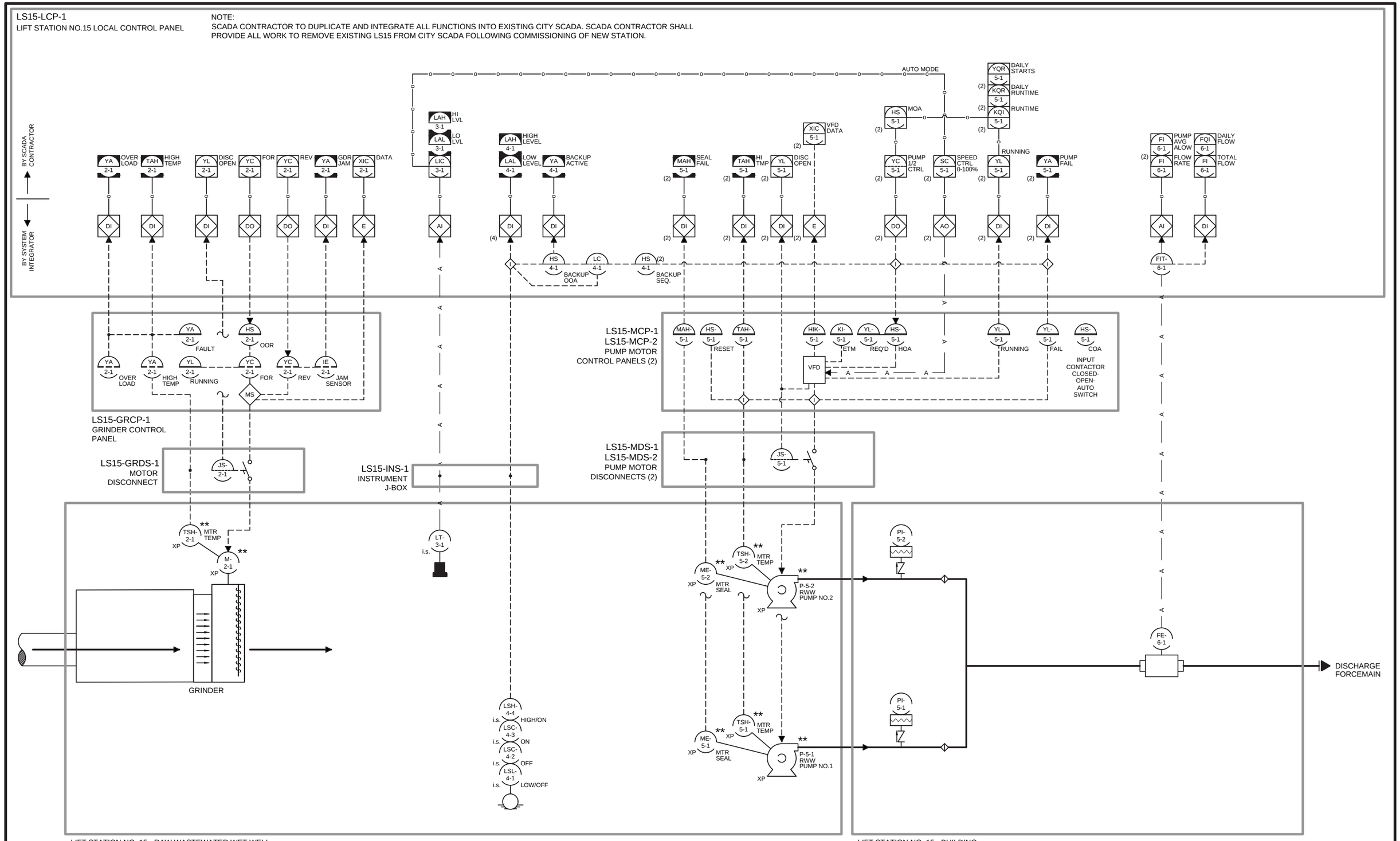

PROJECT NO.: 00616135	SCALE: AS SHOWN	NO.	DATE	REVISION	BY
PROJECT DATE: 1-10-2020	DRAWN BY:				
F.B.:	CHECKED BY: SCR				

PLOT DATE: 1/14/20, P:\610s\616\00616135\CADD\Construction Drawings\8-Electrical\00616135 P&ID 1.dwg

I HEREBY CERTIFY THAT THIS PLAN, REPORT, OR SPECIFICATION WAS PREPARED BY ME OR UNDER MY DIRECT SUPERVISION AND THAT I AM A DULY LICENSED PROFESSIONAL ENGINEER UNDER THE LAWS OF THE STATE OF MINNESOTA.

1/10/2020 Date — 44287 License No.

SCOTT R CHILSON

MSA

ENGINEERING | ARCHITECTURE | SURVEYING
FUNDING | PLANNING | ENVIRONMENTAL
332 W Superior Street, Duluth MN 55802
(218) 722-3915 www.msa-ps.com

© MSA Professional Services, Inc.

LIFT STATION 15 RELOCATION
CITY OF DULUTH, MINNESOTA
2114 W MICHIGAN STREET

P&ID - NO.1

FILE NO. 00616135

SHEET E-11

LS15-LCP-1
LIFT STATION NO.15 LOCAL CONTROL PANEL

NOTE:
SCADA CONTRACTOR TO DUPLICATE AND INTEGRATE ALL FUNCTIONS INTO EXISTING CITY SCADA. SCADA CONTRACTOR SHALL PROVIDE ALL WORK TO REMOVE EXISTING LS15 FROM CITY SCADA FOLLOWING COMMISSIONING OF NEW STATION.

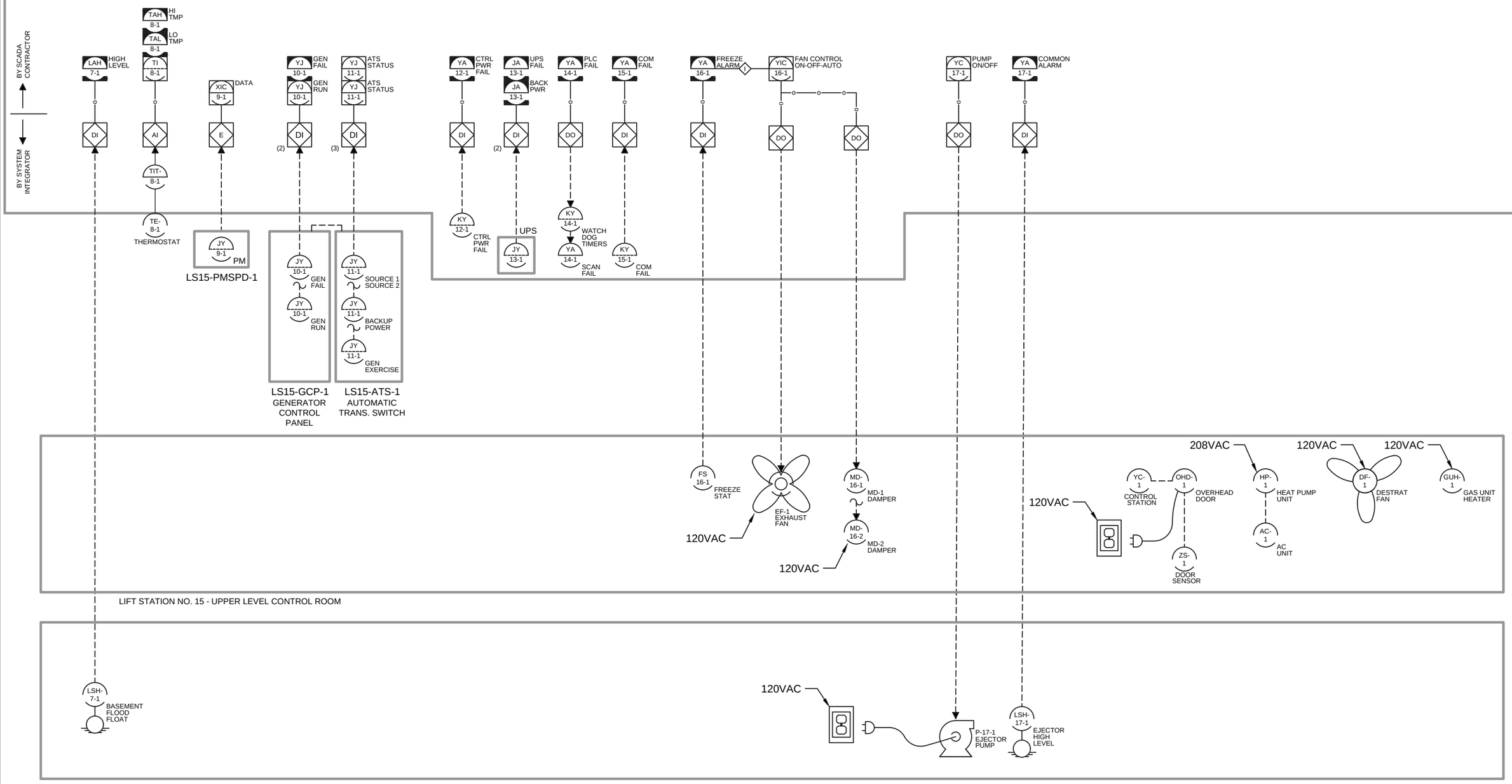

PROJECT NO.: 00616135	SCALE: AS SHOWN	NO.	DATE	REVISION	BY
PROJECT DATE: 1-10-2020	DRAWN BY: -	.	.	.	.
F.B.: .	CHECKED BY: SCR	.	.	.	.
.	.	.	.	.	.

PLOT DATE: 1/14/20. P:\610s\616\00616135\CADD\Construction Drawings\8-Electrical\00616135 P&ID 2.dwg

I HEREBY CERTIFY THAT THIS PLAN, REPORT, OR SPECIFICATION WAS PREPARED BY ME OR UNDER MY DIRECT SUPERVISION AND THAT I AM A DULY LICENSED PROFESSIONAL ENGINEER UNDER THE LAWS OF THE STATE OF MINNESOTA.

1/10/2020 Date — 44287 License No.

SCOTT R CHILSON

MSA
ENGINEERING | ARCHITECTURE | SURVEYING
FUNDING | PLANNING | ENVIRONMENTAL
332 W Superior Street, Duluth MN 55802
(218) 722-3915 www.msa-ps.com
© MSA Professional Services, Inc.

LIFT STATION 15 RELOCATION
CITY OF DULUTH, MINNESOTA
2114 W MICHIGAN STREET

P&ID - NO.2

FILE NO. 00616135
SHEET E-12

FIXTURE SCHEDULE

TYPE	DESCRIPTION	LAMP	MANUFACTURER	MODEL	GENERAL PART NUMBER	NOTES
D1	INDUSTRIAL WET LABEL LED, SURFACE MOUNT 4000 LUMENS, 120-277V, OCC. SENSOR	LED	LITHONIA LIGHTING	VAP	VAP4000LM-PCL-MD-MVOLT-GZ10-40K-80CRI,WLxx,JSB,LSC,MSI10NWL OR EQUAL	2,8
D2	INDUSTRIAL WET LABEL LED, SURFACE MOUNT 4000 LUMENS, 120-277V, OCC. SENSOR, BATT. PACK	LED	LITHONIA LIGHTING	VAP	VAP4000LM-PCL-MD-MVOLT-GZ10-40K-80CRI,WLxx,JSB,LSC,MSI10NWL,BSL520 OR EQUAL	2,5,8
D3	INDUSTRIAL WET LABEL LED, SURFACE MOUNT 4000 LUMENS, 120-277V, BATT. PACK	LED	LITHONIA LIGHTING	VAP	VAP4000LM-PCL-MD-MVOLT-GZ10-40K-80CRI,WLxx,JSB,LSC,BSL520 OR EQUAL	2,5,8
H1	EXTERIOR TRAPEZOID WALL PACK 4000 LUMENS, 120-277V, PC, BATTERY BACKUP	LED	SPAULDING LIGHTING	TRP	TRP-30L-4K-035-2-U-CC-PC-BBU-F OR EQUAL	1,2,3,5,6, 7,8,9
C1	EXTERIOR 6-INCH RECESSED ROUND FIXTURE WITH TRIM KIT 2000 LUMENS, 120-277V, 80CRI, BATTERY BACKUP	LED	COOPER LIGHTING	HALO	PD6-20-ED010-REM-PDM6A-840-64VHWF-RMB22, BFR56FL OR EQUAL	1,2,3,5,6, 8,9
C2	EXTERIOR 6-INCH RECESSED ROUND FIXTURE WITH TRIM KIT 2000 LUMENS, 120-277V, 80CRI	LED	COOPER LIGHTING	HALO	PD6-20-ED010-PDM6A-840-64VHWF-RMB22, BFR56FL OR EQUAL	1,2,3,6,8, 9
C3	EXTERIOR 6-INCH RECESSED ROUND FIXTURE WITH TRIM KIT 1500 LUMENS, 120-277V, 80CRI, BATTERY BACKUP	LED	COOPER LIGHTING	HALO	PD6-15-ED010-REM-PDM6A-840-64VHWF-RMB22, BFR56FL OR EQUAL	1,2,3,5,6, 8,9
C4	EXTERIOR 6-INCH RECESSED ROUND FIXTURE WITH TRIM KIT 1000 LUMENS, 120-277V, 80CRI	LED	COOPER LIGHTING	HALO	PD6-10-ED010-PDM6A-840-64VHWF-RMB22, BFR56FL OR EQUAL	1,2,3,6,8, 9
C5	EXTERIOR 6-INCH RECESSED ROUND FIXTURE WITH TRIM KIT 1500 LUMENS, 120-277V, 80CRI	LED	COOPER LIGHTING	HALO	PD6-15-ED010-PDM6A-840-64VHWF-RMB22, BFR56FL OR EQUAL	1,2,3,6,8, 9
J1	HAZARDOUS ENVIRONMENT LUMINAIRE 1" CEILING MOUNT	LED	EATON-CROUSE HINDS	W701	EVLEDCX3W701 OR EQUAL	2,4,8
	1 FACE EXIT WITH EMERGENCY 18" PENDANT KIT, BLACK	LED	COOPER LIGHTING	LPX	LPX-7-SINGLE-WHITE-2C-SD-WGS11-LPX18PKBK OR EQUAL	5,8

GENERAL NOTES:

A. ALL FIXTURES TO BE 120V UNLESS OTHERWISE NOTED.
B. EC SHALL DETERMINE AND PROVIDE MOUNTING AND FINISH TRIM ACCESSORIES TO MATCH BUILDING.
C. ALL FIXTURES SHALL BE SUPPLIED WITH STANDARD COLOR AND FINISH OPTIONS, COLOR TO BE SELECTED BY THE OWNER AND ENGINEER.

PLAN NOTES:

1. SHALL BE COLD WEATHER RATED.
2. SHALL COMPLY TO FOCUS ON ENERGY STANDARDS.
3. PROVIDE EXTERIOR FIXTURES WITH PHOTO CELLS AND WIRED IN SERIES WITH SWITCH.
4. SHALL BE RATED FOR CLASS 1, DIVISION 1, GROUP C & D.
5. SHALL INCLUDE ALL ACCESSORIES INCLUDING BATTERY AND TEST BUTTON FOR EM OPERATION.
6. SHALL BE WP AND EXTERIOR RATED.
7. BACK-UP BATTERY OPERATION SHALL BE WIRED IN SERIES WITH SWITCH. PROVIDE TEST BUTTON.
8. ALL IRON AND STEEL PRODUCTS BEING PERMANENTLY INSTALLED MUST COMPLY WITH THE "BUY AMERICAN" REQUIREMENTS OF THE FEDERAL REGULATION CFR 635.410.
9. PROVIDE ADJUSTABLE LENS TO COMPENSATE FOR ANGLED SOFFIT.

CONDUIT & BOX SCHEDULE

AREA CLASSIFICATION	VOLTAGE	TYPE	INSTALLATION	USE CONDUIT	USE BOX	SUPPORTS	HARDWARE	LOCATION
NON-HAZARDOUS	ALL	ALL	CONCEALED AFF	PVC40/GRS/AL	CB/PVC	SS/PVC	SS/PVC	AS REQUIRED
NON-HAZARDOUS	ALL	ALL	UG/BELOW SLAB	PVC80/PGRS	PVC	SS/PVC	SS/PVC	AS REQUIRED
NON-HAZARDOUS	ALL	ALL	DIRECT-BURIED	PVC 80	---	PVC	SS	AS REQUIRED
NON-HAZARDOUS	ALL	ALL	INTERIOR EXPOSED	GRS/AL	CB	GS/AL	GS/AL	AS REQUIRED
NON-HAZARDOUS	ALL	ALL	EXTERIOR EXPOSED	GRS/AL	CB	GS/AL	GS/AL	AS REQUIRED
HAZARDOUS	ALL	ALL	EXPOSED	PGRS/AL	PCB	SS	SS	AS REQUIRED
WET-HAZARDOUS	ALL	ALL	EXPOSED	PGRS/AL	PCB	SS	SS	AS REQUIRED
OUTDOOR EXPOSED	ALL	ALL	ALL	GRS/AL	CB	GS/AL	GS/AL	AS REQUIRED

SPACE CLASSIFICATION:

CONTROL ROOM	NON-HAZARDOUS
PROCESS ROOM	NON-HAZARDOUS/CORROSIVE
WETWELL	WET-HAZARDOUS, CLASS I, DIV. 1

NOTES:

1. ALL CONDUIT AND RACEWAYS SHALL BE CONCELAED. CONDUITS SHALL BE ROUTED ABOVE THE CEILING VERSUS SLABBED.
2. NO SUBSTITUTIONS SHALL BE ALLOWED UNLESS WRITTEN PERMISSION TO THE CONTRARY HAS BEEN OBTAINED FROM ENGINEER.
3. TRANSITION TO EXPOSED CONDUIT SHALL COMPLY WITH SPECIFIED REQUIREMENTS FOR EXPOSED CONDUIT, REGARDLESS OF WHETHER TRANSITION IS RIGID OR FLEXIBLE. EMBEDDED TRANSITIONS SHALL BE RIGID MATERIAL.
4. ALL JUNCTION BOXES NOT LOCATED IN XP AREAS SHALL BE SS NEMA 4X OR CAST NEMA 7.
5. EC SHALL FURNISH AND INSTALL WIRE GUTTERS AS REQUIRED.
6. EC SHALL ONLY USE FLEX CONDUIT IN EQUIPMENT CONNECTIONS. USE ON FIXTURES AND I&C DEVICES SHALL NOT BE PERMITTED.
7. AFD MOTOR FEEDERS SHALL BE INSTALLED IN GRS CONDUIT AND USE INSULATED AFD MOTOR CABLES.
8. EXPOSED CONDUIT SHALL BE PAINTED TO MATCH MOUNTING LOCATION.
9. EC MAY SELECT MATERIALS FOR INTERMEDIATE AND TEMPORARY CONNECTION AND CONDUIT. SHALL BE CODE COMPLIANT.
10. NOTE SCH 80 PVC SHALL BE USED FOR RATED EQUIPMENT CABLE SLEEVE AS DETAILED.

ABBREVIATIONS:

CONDUIT

PVC:	SCHEDULE 40 RIGID PVC
GRS:	GALVANIZED RIGID STEEL
PGRS:	PVC-COATED GRS
EMT:	ELECTRICAL METALLIC TUBING
HDPE:	HIGH DENSITY POLYETHYLENE

BOXES

SB:	STEEL BOX
CB:	CAST BOX
PCB:	PVC-COATED CAST BOX

SUPPORTS & HARDWARE

GS	GALVANIZED STEEL
SS	STAINLESS STEEL
PVC	PVC
ZPS	ZINC PLATED STEEL
PCS	PVC COATED STEEL
S	STEEL
AL	ALUMINUM

THREE PHASE PANEL SCHEDULE — LS15-LA-1

TYPE: LIGHTING & APPLIANCE PANELBOARD
VOLTAGE: 208 / 120 - 3P4W
MOUNT: SURFACE - NEMA 1
SINGLE TUB

BUS CONSTRUCTION: CU
GROUND BUS: YES
ISOLATED GROUND BUS: YES

BUS AMPACITY: 200A
MAIN CIRCUIT BREAKER: 100A
SUB-FEED LUGS: YES
INTERRUPTING CAPACITY: 25 KAIC

	DESCRIPTION	LOAD	BKR	A	B	C	BKR	LOAD	DESCRIPTION	
1	LS15-LCP-1	12.00	20/2	17.0	***	***	20/1	5.00	GAS HEATER GUH-1	2
3		12.00	I	***	26.0	***	30/1	14.00	EXHAUST FAN EF-1	4
5	LIGHTS - INTERIOR	3.00	20/1	***	***	8.0	20/1	5.00	DAMPERS MD-1, MD-2	6
7	LIGHTS - EXT. SOFFIT	5.00	20/1	5.0	***	***	20/1		SPARE	8
9	LIGHTS - EXT. WALLPACK	1.25	20/1	***	1.3	***	20/1		SPARE	10
11	LIGHTS - WETWELL	5.00	20/1	***	***	17.0	20/2	12.00	GENERATOR BLOCK HTR	12
13	LIGHTS - EXIT SIGNS	3.00	20/1	15.0	***	***	I	12.00		14
15	LIGHTS - LOWER LEVEL	4.50	20/1	***	8.7	***	20/1	4.20	GENERATOR BATTERY HTR	16
17	REC - EXTERIOR	6.00	20/1	***	***	10.2	20/1	4.20	GENERATOR BATTERY CHGR	18
19	REC - INTERIOR 1	3.00	20/1	4.5	***	***	15/1	1.50	GENERATOR RECEPTACLE	20
21	REC - INTERIOR 2	3.00	20/1	***	4.5	***	15/1	1.50	GENERATOR LIGHT	22
23	REC - LOWER LEVEL	3.00	20/1	***	***	18.0	20/2	15.00	AC-1/HP-1	24
25	REC - OVERHEAD DOOR	1.50	20/1	16.5	***	***	I	15.00		26
27	REC - EJECTOR PUMP	4.00	20/1	***	9.0	***	15/1	5.00	FAN DF-1	28
29	LS15-MCP-1 CONTROL PWR	4.00	20/1	***	***	4.0				30
31	LS15-MCP-2 CONTROL PWR	4.00	20/1	4.0	***	***				32
33				***	0.0	***				34
35				***	***	0.0				36

TOTAL AMPS / PHASE: 62.0 49.5 57.2
KVA / PHASE: 7.5 5.9 6.9
TOTAL CONNECTED KVA: 20.3

THREE PHASE PANEL SCHEDULE — LS15-PP-1

TYPE: POWER PANEL BOARD
VOLTAGE: 480 / 480 - 3P3W
MOUNT: SURFACE - NEMA 1
SINGLE TUB

BUS CONSTRUCTION: CU
GROUND BUS: YES
ISOLATED GROUND BUS: YES

BUS AMPACITY: 500A
MAIN CIRCUIT BREAKER: 400A
SUB-FEED LUGS: YES
INTERRUPTING CAPACITY: 25 KAIC

	DESCRIPTION	LOAD	BKR	A	B	C	BKR	LOAD	DESCRIPTION	
1	MAIN	0.00	I	65.0	***	***	I	65.00	MOTOR CONTROL PANEL 2 LS15-MCP-2	2
3		0.00	400/3	***	65.0	***	150/3	65.00		4
5		0.00	I	***	***	65.0	I	65.00		6
7	GRINDER CONTROL PANEL LS15-GRCP-1	12.00	I	52.0	***	***	50/4	40.00	30kVA TRANSFORMER LS15-XF-1	8
9		12.00	20/3	***	52.0	***	I	40.00		10
11		12.00	I	***	***	52.0	I	40.00		12
13	MOTOR CONTROL PANEL 1 LS15-MCP-1	65.00	I	105.0	***	***	I	40.00		14
15		65.00	150/3	***	105.0	***	60/4	40.00	POWER MONITOR	16
17		65.00	I	***	***	105.0	I	40.00		18
19	SPARE			40.0	***	***	I	40.00		20
21				***	40.0	***	I	40.00		22
23				***	***	80.0	100/4	80.00	SPD	24
25	SPARE			80.0	***	***	I	80.00		26
27				***	80.0	***	I	80.00		28
29				***	***	80.0	I	80.00		30

TOTAL AMPS / PHASE: 342.0 342.0 382.0
KVA / PHASE: 94.9 94.9 106.0
TOTAL CONNECTED KVA: 295.8

PROJECT NO.: 00616135	SCALE: AS SHOWN	NO.	DATE	REVISION	BY
PROJECT DATE: 1-10-2020	DRAWN BY: -	.	.	.	.
F.B.: .	CHECKED BY: SCR	.	.	.	.
.	.	.	.	.	.

PLOT DATE: 1/14/20, P:\610s\616\00616135\CADD\Construction Drawings\8-Electrical\00616135 ELECTRICAL SCHEDULES.dwg

I HEREBY CERTIFY THAT THIS PLAN, REPORT, OR SPECIFICATION WAS PREPARED BY ME OR UNDER MY DIRECT SUPERVISION AND THAT I AM A DULY LICENSED PROFESSIONAL ENGINEER UNDER THE LAWS OF THE STATE OF MINNESOTA.

1/10/2020 Date — 44287 License No.

SCOTT R CHILSON

MSA
ENGINEERING | ARCHITECTURE | SURVEYING
FUNDING | PLANNING | ENVIRONMENTAL
332 W Superior Street, Duluth MN 55802
(218) 722-3915 www.msa-ps.com
© MSA Professional Services, Inc.

LIFT STATION 15 RELOCATION
CITY OF DULUTH, MINNESOTA
2114 W MICHIGAN STREET

ELECTRICAL SCHEDULES NO.1

FILE NO. 00616135
SHEET E-13

LS15-LCP-1 FIELD DEVICE & INSTRUMENT SCHEDULE

				POWER SOURCE			DESTINATION			DESTINATION		
TAG NO.	DESCRIPTION	ENV.	LOCATION	FROM	TYPE	WIRING	DEST	TYPE	WIRING	DEST	TYPE	WIRING
EF-1	EXHAUST FAN	NH	UPPER LEVEL	LS15-LA-1	120VAC	30-2G	LS15-LCP-1	DISCRETE	D2, D1 SPARE	N/A		
FE-6-1	FLOW METER ELEMENT	NH	UPPER LEVEL	FIT-6-1	LOOP POWER	A1	N/A			N/A		
FIT-6-1	FLOW METER TRANSMITTER	NH	LS15-LCP-1	LS15-LCP-1	120VAC	N/A	LS15-LCP-1	ANALOG DISCRETE	A1 D2	N/A		
FS-16-1	FREEZE STAT	NH	UPPER LEVEL	N/A			LS15-LCP-1	DISCRETE	D2, D1 SPARE	N/A		
LS15-LCP-1	LOCAL CONTROL PANEL	NH	UPPER LEVEL	LS15-LA-1	208/120VAC	20-2G	LS15-GRCP-1	DISCRETE	D10, D2 SPARE	LS15-MCP-1	DISCRETE ANALOG ETHERNE	D12, D3 SPARE A1, A1 SPARE E1
							LS15-MCP-2	DISCRETE ANALOG ETHERNE T	D12, D3 SPARE A1, A1 SPARE E1	LS15-GCP	DISCRETE	D4,D2 SPARE
							LS15-ATS-1	DISCRETE	D6, D1 SPARE	N/A		
LS15-ATS-1	AUTOMATIC TRANSFER SWITCH	NH	UPPER LEVEL	UTILITY	480VAC	400-4G	LS15-PP-1	480VAC	400-4G	LS15-GCP-1	DISCRETE	
							LS15-LCP-1	DISCRETE	D6, D1 SPARE	N/A		
LS15-GCP-1	GENERATOR CONTROL PANEL	NH	EXTERIOR	GAS POWERED			LS15-ATS-1	480VAC DISCRETE	400-4G	N/A		
							LS15-LCP-1	DISCRETE	D4, D1 SPARE	N/A		
LS15-GRCP-1	GRINDER CONTROL PANEL	NH	UPPER LEVEL	LS15-PP-1	480VAC	20-3G	LS15-GRDS-1	480VAC DISCRETE	20-3G D4, D1 SPARE	LS15-LCP-1	DISCRETE	D14, D2 SPARE
LS15-GRDS-1	GRINDER DISCONNECT SWITCH	NH	EXTERIOR	LS15-GRCP-1	480VAC DISCRETE	20-3G D4, D1	M-2-1	480VAC	MFR CABLE	TSH-2-1	DISCRETE	D2
LS15-INS-1	INSTRUMENT J-BOX (WETWELL)	NH	EXTERIOR	LS15-LCP-1	LOOP POWER	A1	LS15-LCP-1	DISCRETE	D8, D2 SPARE	N/A		
LS15-MCP-1	MOTOR CONTROL PANEL FOR PUMP 1	NH	UPPER LEVEL	LS15-PP-1	480VAC	150-3G	LS15-MDS-1	480VAC DISCRETE	65-3G D6, D1 SPARE	LS15-LCP-1	DISCRETE ANALOG ETHERNE T	D12, D3 SPARE A1, A1 SPARE E1
				LS15-LA-1	120VAC	20-2G	N/A			N/A		
LS15-MCP-2	MOTOR CONTROL PANEL FOR PUMP 2	NH	UPPER LEVEL	LS15-PP-1	480VAC	150-3G	LS15-MDS-2	480VAC DISCRETE	65-3G D6, D1 SPARE	LS15-LCP-1	DISCRETE ANALOG ETHERNE T	D12, D3 SPARE A1, A1 SPARE E1
				LS15-LA-1	120VAC	20-2G	N/A			N/A		
LS15-MDS-1	MOTOR DISCONNECT SWITCH - PUMP 1	NH	UPPER LEVEL	LS15-MCP-1	480VAC DISCRETE	65-3G D6, D1	P-5-1	480VAC	MFR CABLE	TSH-5-1 ME-5-1	DISCRETE	D4, D1 SPARE
LS15-MDS-2	MOTOR DISCONNECT SWITCH - PUMP 2	NH	EXTERIOR	LS15-MCP-2	480VAC DISCRETE	65-3G D6, D1	P-5-2	480VAC	MFR CABLE	TSH-5-2 ME-5-2	DISCRETE	D4, D1 SPARE
LS15-PMSPD-1	POWER MONITOR / SPD ENCLOSURE	NH	UPPER LEVEL	LS15-PP-1	480VAC	VARIES	LS15-LCP-1	ETHERNE T	E1	N/A		
LSL-4-1	WETWELL LEVEL FLOAT SWITCH - LOW/OFF	i.s.	WETWELL	N/A			LS15-INS-1	DISCRETE	D2, D1 SPARE	N/A		
LSC-4-2	WETWELL LEVEL FLOAT SWITCH - OFF	i.s.	WETWELL	N/A			LS15-INS-1	DISCRETE	D2, D1 SPARE	N/A		
LSC-4-3	WETWELL LEVEL FLOAT SWITCH - ON	i.s.	WETWELL	N/A			LS15-INS-1	DISCRETE	D2, D1 SPARE	N/A		
LSH-4-4	WETWELL LEVEL FLOAT SWITCH - HIGH/ON	i.s.	WETWELL	N/A			LS15-INS-1	DISCRETE	D2, D1 SPARE	N/A		
LSH-7-1	ROOM LEVEL FLOAT SWITCH - HIGH	NH	LOWER LEVEL	N/A			LS15-LCP-1	DISCRETE	D2, D1 SPARE	N/A		
LSH-17-1	EJECTOR PUMP FLOAT SWITCH - HIGH	NH	LOWER LEVEL	N/A			LS15-LCP-1	DISCRETE	D2, D1 SPARE	N/A		
LT-3-1	WETWELL LEVEL TRANSDUCER	i.s.	WETWELL	LS15-INS-1	LOOP POWER	A1	N/A			N/A		
M-2-1	GRINDER MOTOR	XP	GRINDER	LS15-GRDS-1	480VAC	15-3G	N/A			N/A		
MD-1	DAMPER	NH	UPPER LEVEL	LS15-LA-1	120VAC	20-2G	LS15-LCP-1	DISCRETE	D2, D1 SPARE	N/A		
MD-2	DAMPER	NH	UPPER LEVEL	LS15-LA-1	120VAC	20-2G	LS15-LCP-1	DISCRETE	D2, D1 SPARE	N/A		
ME-5-1	MOTOR SEAL SENSOR - PUMP 1	XP	WETWELL	N/A			LS15-MDS-1	DISCRETE	D2, D1 SPARE	N/A		
ME-5-2	MOTOR SEAL SENSOR - PUMP 2	XP	WETWELL	N/A			LS15-MDS-2	DISCRETE	D2, D1 SPARE	N/A		
P-5-1	RWW PUMP NO. 1	XP	WETWELL	LS15-MDS-1	480VAC	65-3G	N/A			N/A		
P-5-2	RWW PUMP NO. 2	XP	WETWELL	LS15-MDS-2	480VAC	65-3G	N/A			N/A		
P-17-1	SEWERAGE EJECTOR PUMP	NH	LOWER LEVEL	LS15-LA-1	208VAC	20-3G	LS15-LCP-1	DISCRETE	D4, D2 SPARE	N/A		
PI-5-1	PRESSURE GAUGE (MECHANICAL)	NH	LOWER LEVEL	N/A			N/A			N/A		
PI-5-2	PRESSURE GAUGE (MECHANICAL)	NH	LOWER LEVEL	N/A			N/A			N/A		
TE-8-1	ROOM TEMP SENSOR	NH	LS15-LCP-1	LS15-LCP-1	LOOP POWER	A1	N/A			N/A		
TIT-8-1	ROOM TEMP TRANSMITTER	NH	LS15-LCP-1	LS15-LCP-1	ANALOG	A1	N/A			N/A		
TSH-2-1	GRINDER MOTOR HIGH TEMP SWITCH	XP	GRINDER	N/A			LS15-GRDS-1	DISCRETE	D2, D1 SPARE	N/A		
TSH-5-1	MOTOR HIGH TEMP SWITCH - PUMP 1	XP	WETWELL	N/A			LS15-MDS-1	DISCRETE	D2, D1 SPARE	N/A		
TSH-5-2	MOTOR HIGH TEMP SWITCH - PUMP 2	XP	WETWELL	N/A			LS15-MDS-2	DISCRETE	D2, D1 SPARE	N/A		

NOTE: THE DEVICES LISTED ABOVE ARE THOSE THAT INTERFACE WITH THE LOCAL CONTROL PANEL. PLEASE REFER TO THE PANEL BOARD SCHEDULES FOR ADDITIONAL ELECTRICAL EQUIPMENT.

© MSA Professional Services, Inc.

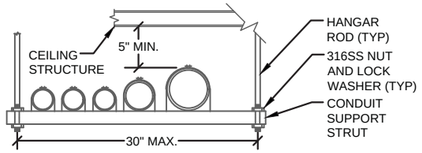

NOTES:
1. LENGTH OF CONDUIT SUPPORT STRUT VARIES WITH NUMBER OF CONDUITS TO BE SUPPORTED AND SPACING BETWEEN CONDUITS.
2. SIZE CONDUIT SUPPORT STRUT TO SUPPORT LOAD WITHOUT DEFLECTION. MINIMUM SIZE OF CONDUIT SUPPORT STRUT SHALL BE 1-1/2"x1-1/2".
3. HANGAR ROD SHALL BE CONSTRUCTED OF HOT-DIPPED GALVANIZED STEEL, SIZE ROD TO SUPPORT LOAD, MINIMUM SIZE SHALL BE 3/8".
4. MANUFACTURER'S WRITTEN RECOMMENDATIONS SHALL DICTATE ALLOWABLE SPAN, NUMBER/SIZE OF HANGER RODS, AND ALLOWABLE LOADING.
5. USE CONCRETE INSERTS FOR SUPPORT OF HANGAR RODS FROM CONCRETE CEILING, USE SWIVEL BEAM CLAMPS FOR STEEL BEAM APPLICATIONS.

1 E-15 CONDUIT RACKING SYSTEM
N.T.S

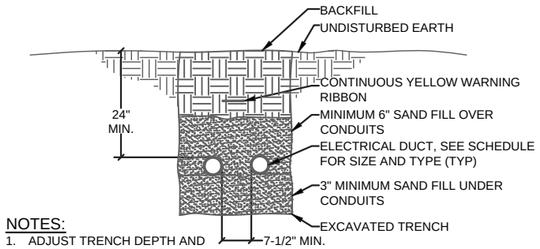

NOTES:
1. ADJUST TRENCH DEPTH AND WIDTH TO ACCOMMODATE CONDUITS SCHEDULED.
2. COORDINATE ROUTING TO AVOID CONFLICTS WITH MECHANICAL PIPING.

4 E-15 DIRECT BURIED UNDERGROUND CONDUIT
N.T.S

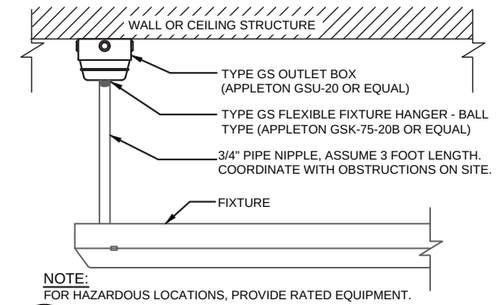

NOTE:
FOR HAZARDOUS LOCATIONS, PROVIDE RATED EQUIPMENT.

6 E-15 LUMINARY FIXTURE PENDANT MOUNTING
N.T.S

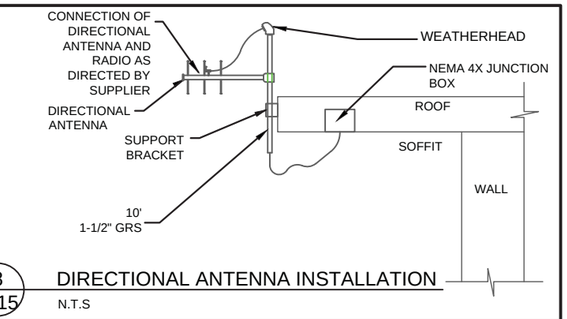

8 E-15 DIRECTIONAL ANTENNA INSTALLATION
N.T.S

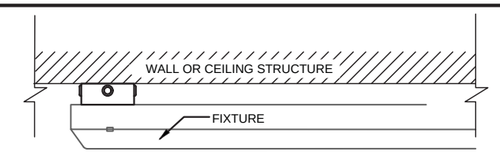

NOTE:
FOR HAZARDOUS LOCATIONS, PROVIDE RATED EQUIPMENT.

7 E-15 LUMINARY FIXTURE SURFACE MOUNTING
N.T.S

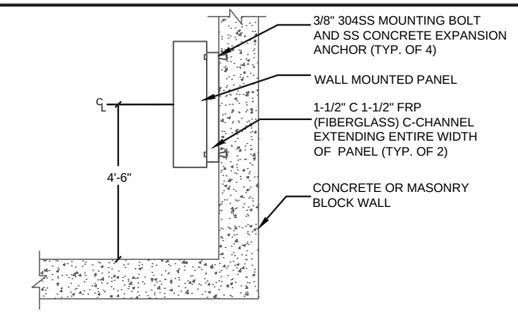

9 E-15 WALL-MOUNTED CONTROL PANEL INSTALLATION (EXTERIOR WALL)
N.T.S

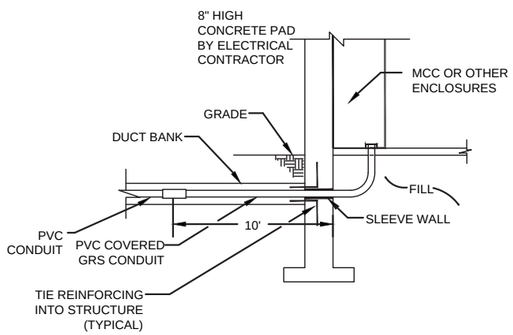

2 E-15 CONDUIT ENTRANCE
N.T.S

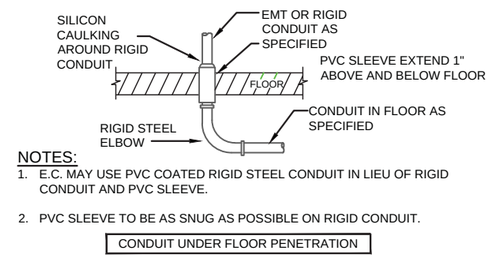

NOTES:
1. E.C. MAY USE PVC COATED RIGID STEEL CONDUIT IN LIEU OF RIGID CONDUIT AND PVC SLEEVE.
2. PVC SLEEVE TO BE AS SNUG AS POSSIBLE ON RIGID CONDUIT.

CONDUIT UNDER FLOOR PENETRATION

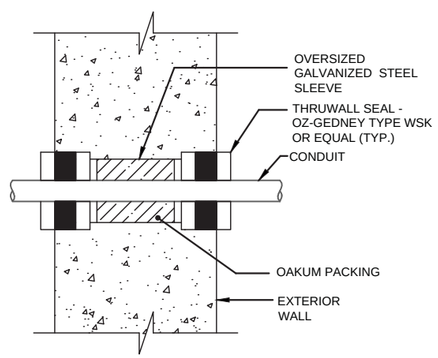

WALL PENETRATION

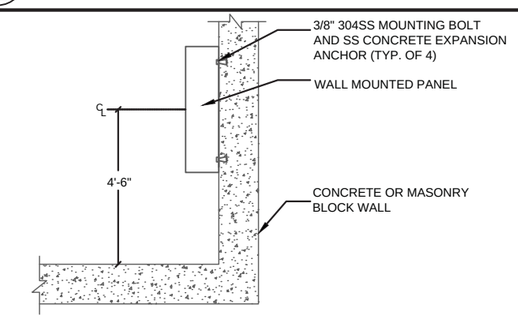

10 E-15 WALL-MOUNTED CONTROL PANEL INSTALLATION (INTERIOR WALL)
N.T.S

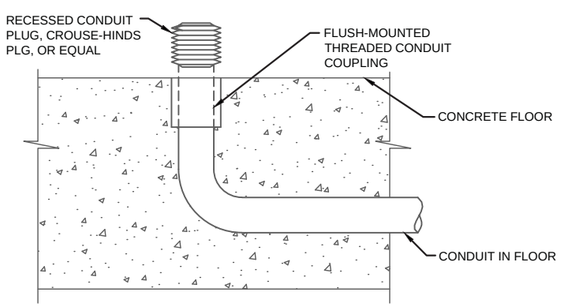

3 E-15 IN-FLOOR CONDUIT FUTURE EQUIPMENT
N.T.S

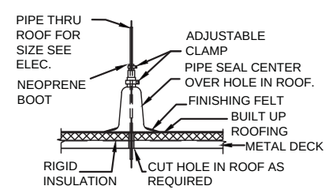

ROOF PENETRATION

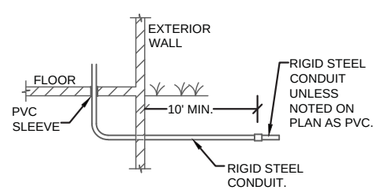

EXTERIOR CONDUIT INTO NEW SPACE

5 E-15 CONDUIT ROUTING DETAIL
N.T.S

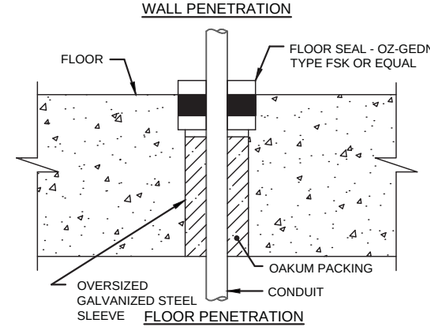

FLOOR PENETRATION

8 E-15 CONDUIT WALL PENETRATION
N.T.S

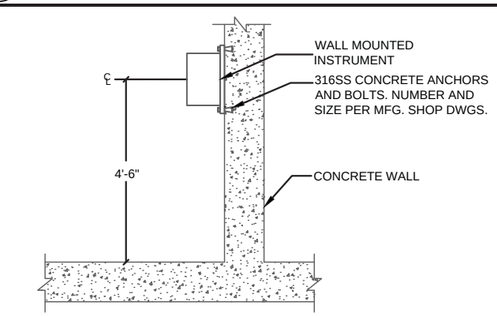

11 E-15 WALL-MOUNTED INSTRUMENT INSTALLATION
N.T.S

PROJECT NO.: 00616135	SCALE: AS SHOWN	NO.	DATE	REVISION	BY
PROJECT DATE: 1-10-2020	DRAWN BY:				
F.B. :	CHECKED BY: SCR				

PLOT DATE: 1/14/20, P:\610s\61\00616135\CADD\Construction Drawings\8-Electrical\00616135 DETAILS 1 .dwg

I HEREBY CERTIFY THAT THIS PLAN, REPORT, OR SPECIFICATION WAS PREPARED BY ME OR UNDER MY DIRECT SUPERVISION AND THAT I AM A DULY LICENSED PROFESSIONAL ENGINEER UNDER THE LAWS OF THE STATE OF MINNESOTA.

1/10/2020 Date — 44287 License No.
SCOTT R CHILSON

MSA
ENGINEERING | ARCHITECTURE | SURVEYING
FUNDING | PLANNING | ENVIRONMENTAL
332 W Superior Street, Duluth MN 55802
(218) 722-3915 www.msa-ps.com
© MSA Professional Services, Inc.

LIFT STATION 15 RELOCATION
CITY OF DULUTH, MINNESOTA
2114 W MICHIGAN STREET

DETAILS NO.1

FILE NO. 00616135
SHEET E-15

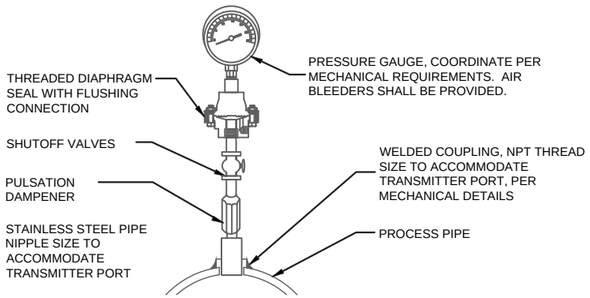

1 E-16 PRESSURE GAUGE INSTALLATION

N.T.S

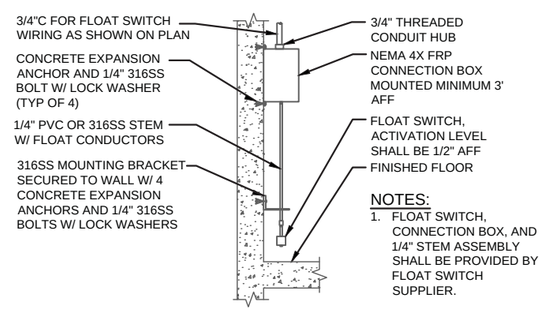

NOTES:

1. FLOAT SWITCH, CONNECTION BOX, AND 1/4" STEM ASSEMBLY SHALL BE PROVIDED BY FLOAT SWITCH SUPPLIER.
2. FLOAT SWITCH GROUND CONDUCTOR SHALL BE SOLIDLY GROUNDED.

2 E-16 FLOAT SWITCH INSTALLATION DRY WELL

N.T.S

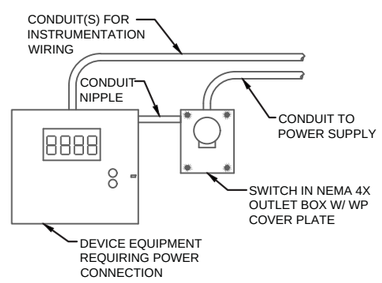

3 E-16 FIELD DEVICE AND EQUIPMENT POWER CONNECTION

N.T.S

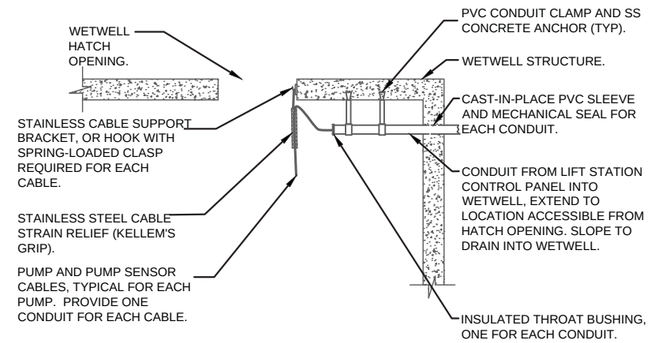

4 E-16 SUBMERSIBLE PUMP CABLE INSTALLATION

N.T.S

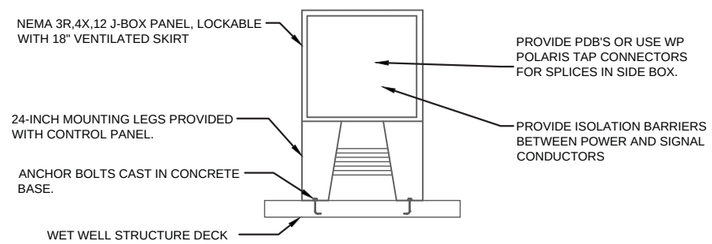

NOTES:

1. REFER TO SITE PLAN FOR LOCATION AND ORIENTATION.
2. ALL HARDWARE SHALL BE CONSTRUCTED OF STAINLESS STEEL.

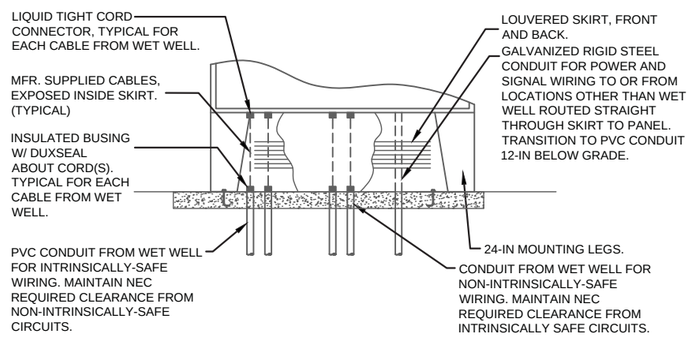

5 E-16 WETWELL PUMP(S), GRINDER, AND INSTRUMENT CONNECTION J-BOX PANEL DETAIL

N.T.S

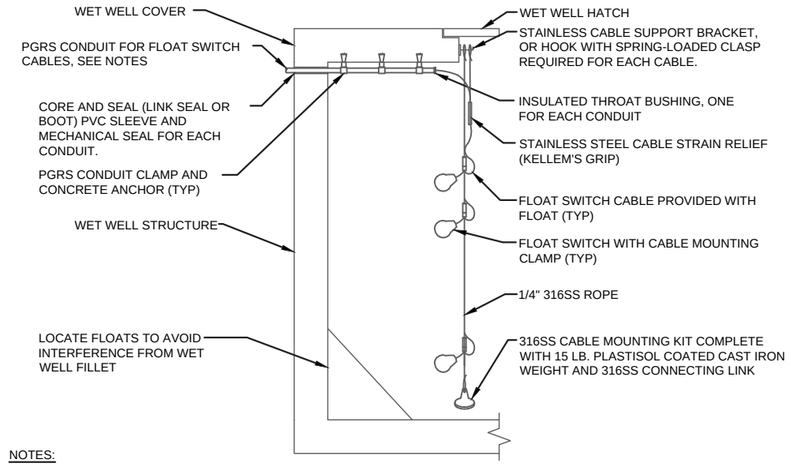

NOTES:

1. INSTALL FLOAT SWITCHES IN LOCATION WHERE, SUSPENSION HOOKS, CABLES, AND CONDUIT ENDS ARE ALL ACCESSIBLE FROM THE WET WELL HATCH WITHOUT ENTERING THE WET WELL.
2. INSTALL NO MORE THAN THREE FLOAT SWITCH CABLES IN EACH 1-1/2" CONDUIT. PROVIDE MULTIPLE CONDUITS IF MORE THAN THREE FLOATS ARE SPECIFIED.
3. REFER TO PLANS AND SPECIFICATIONS FOR THE NUMBER OF FLOAT SWITCHES REQUIRED. ADJUST FLOAT SWITCH MOUNTING TO ACHIEVE ACTIVATION ELEVATIONS AS SPECIFIED, SHOWN ON PLANS, OR DIRECTED IN THE FIELD BY THE ENGINEER.
4. FLOAT SWITCH GROUND CONDUCTOR SHALL BE SOLIDLY GROUNDED.
5. PROVIDED SUFFICIENT SLACK CABLE, COILED AND SUSPENDED FROM HOOK, TO ALLOW ADJUSTMENT +/- 3 FT. FROM SPECIFIED ELEVATION.

6 E-16 CABLE SUSPENDED FLOAT SWITCH INSTALLATION

N.T.S

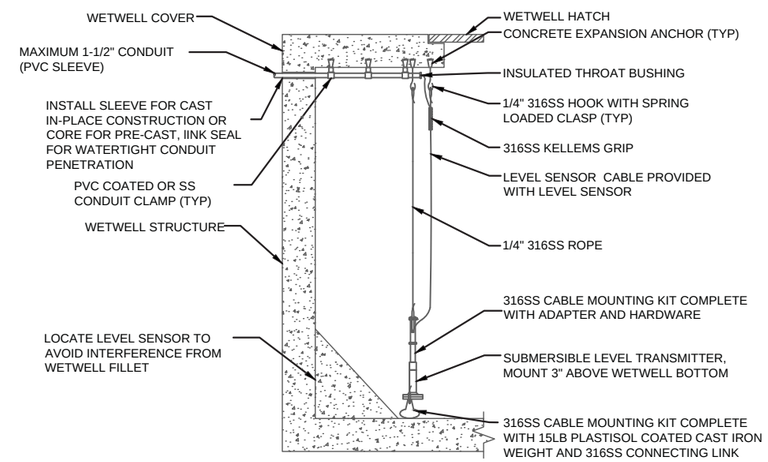

NOTES:

1. INSTALL LEVEL SENSOR IN LOCATION WHERE SUSPENSION HOOKS, ALL CABLES, AND CONDUIT(S) ARE ALL ACCESSIBLE FROM THE WETWELL HATCH WITHOUT ENTERING THE WETWELL.
2. CONNECT LEVEL SENSOR BREATHER TUBE (IF PROVIDED) PER MANUFACTURER'S INSTRUCTIONS.
3. PROVIDE SUFFICIENT SLACK CABLE, COILED AND SUSPENDED FROM HOOK, TO ALLOW ADJUSTMENT +/- 3 FT. FROM SPECIFIED ELEVATION.

7 E-16 SUBMERSIBLE LEVEL TRANSDUCER INSTALLATION

N.T.S

PROJECT NO.:	00616135	SCALE: AS SHOWN	NO.	DATE	REVISION	
PROJECT DATE:	1-10-2020	DRAWN BY: -	.	.	.	.
F.B. :	.	CHECKED BY: SCR	.	.	.	.
.		.	.	.	.	.

PLOT DATE: 1/14/20, P:\610s\616\00616135\CADD\Construction Drawings\8-Electrical\00616135 DETAILS 1 .dwg

I HEREBY CERTIFY THAT THIS PLAN, REPORT, OR SPECIFICATION WAS PREPARED BY ME OR UNDER MY DIRECT SUPERVISION AND THAT I AM A DULY LICENSED PROFESSIONAL ENGINEER UNDER THE LAWS OF THE STATE OF MINNESOTA.

Date License No.

SCOTT R CHILSON

MSA

ENGINEERING | ARCHITECTURE | SURVEYING
FUNDING | PLANNING | ENVIRONMENTAL
332 W Superior Street, Duluth MN 55802
(218) 722-3915 www.msa-ps.com

© MSA Professional Services, Inc.

LIFT STATION 15 RELOCATION
CITY OF DULUTH, MINNESOTA
2114 W MICHIGAN STREET

DETAILS NO.2

FILE NO. 00616135

SHEET E-16

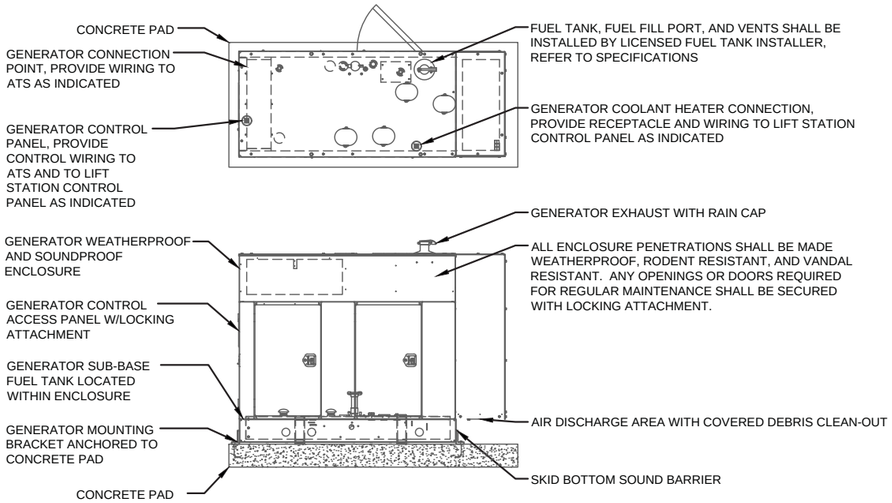

NOTES:

1. INSTALL GENERATOR PER MANUFACTURER'S INSTRUCTIONS, IN ACCORDANCE WITH ALL CODES, AND ON CONCRETE ISOLATION PAD, REFER TO ARCHITECTURAL/STRUCTURAL/CIVIL PLANS.
2. REFER TO SITE PLAN FOR LOCATION AND ORIENTATION.

1 / E-17 PERMANENT ONSITE GENERATOR INSTALLATION

N.T.S

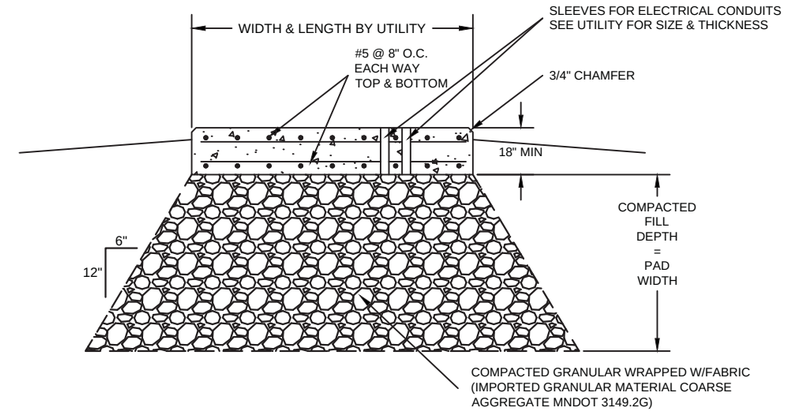

3 / E-17 CONCRETE UTILITY PAD

N.T.S

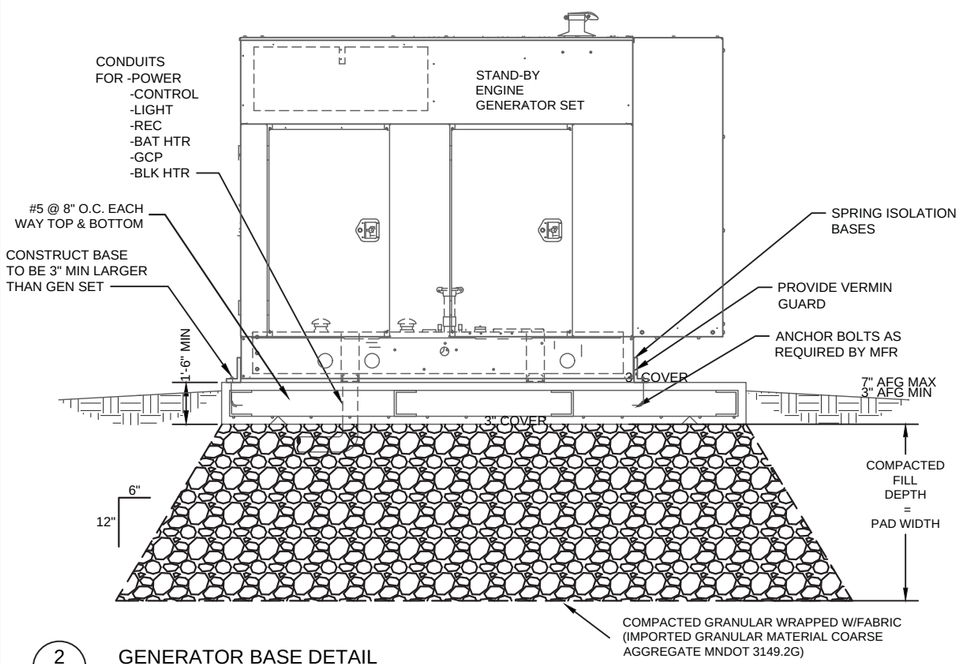

2 / E-17 GENERATOR BASE DETAIL

N.T.S

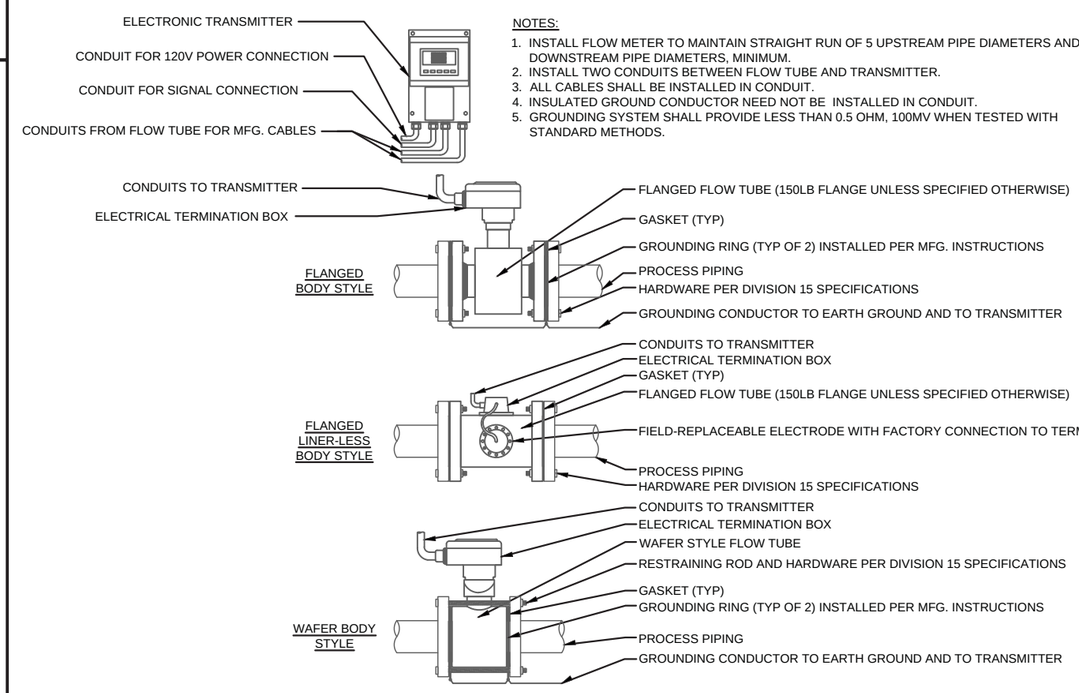

NOTES:

1. INSTALL FLOW METER TO MAINTAIN STRAIGHT RUN OF 5 UPSTREAM PIPE DIAMETERS AND 2 DOWNSTREAM PIPE DIAMETERS, MINIMUM.
2. INSTALL TWO CONDUITS BETWEEN FLOW TUBE AND TRANSMITTER.
3. ALL CABLES SHALL BE INSTALLED IN CONDUIT.
4. INSULATED GROUND CONDUCTOR NEED NOT BE INSTALLED IN CONDUIT.
5. GROUNDING SYSTEM SHALL PROVIDE LESS THAN 0.5 OHM, 100MV WHEN TESTED WITH STANDARD METHODS.

4 / E-17 ELECTROMAGNETIC FLOW METER INSTALLATION

N.T.S

PROJECT NO.: 00616135	SCALE: AS SHOWN	NO.	DATE	REVISION	BY
PROJECT DATE: 1-10-2020	DRAWN BY: -	.	.	.	.
F.B. : .	CHECKED BY: SCR	.	.	.	.
.	.	.	.	.	.

PLOT DATE: 1/14/20. P:\610s\616\00616135\CADD\Construction Drawings\8-Electrical\00616135 DETAILS 1 .dwg

I HEREBY CERTIFY THAT THIS PLAN, REPORT, OR SPECIFICATION WAS PREPARED BY ME OR UNDER MY DIRECT SUPERVISION AND THAT I AM A DULY LICENSED PROFESSIONAL ENGINEER UNDER THE LAWS OF THE STATE OF MINNESOTA.

1/10/2020 Date — 44287 License No.

SCOTT R CHILSON

MSA

ENGINEERING | ARCHITECTURE | SURVEYING
FUNDING | PLANNING | ENVIRONMENTAL
332 W Superior Street, Duluth MN 55802
(218) 722-3915 www.msa-ps.com

© MSA Professional Services, Inc.

LIFT STATION 15 RELOCATION
CITY OF DULUTH, MINNESOTA
2114 W MICHIGAN STREET

DETAILS NO.3

FILE NO. 00616135

SHEET E-17