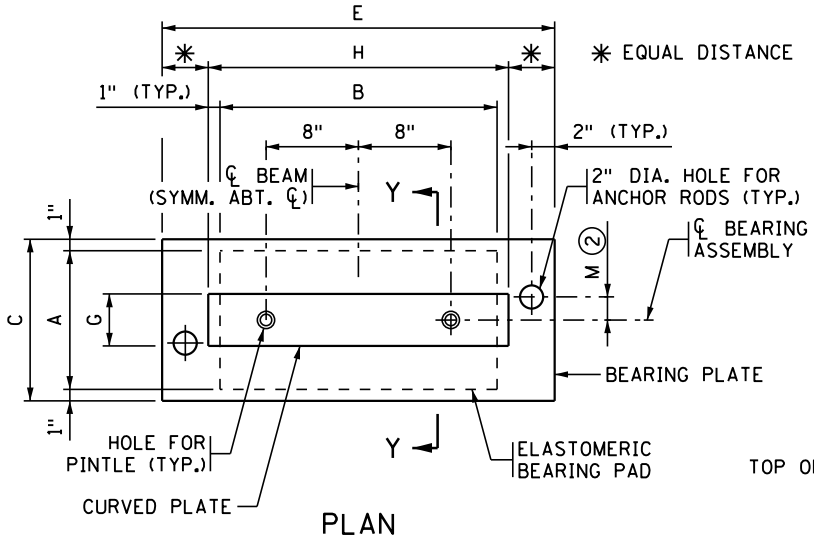

PLAN

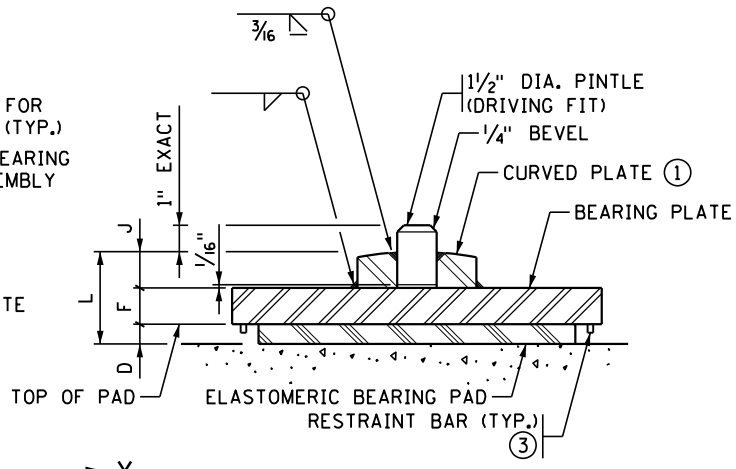

SECTION Y-Y

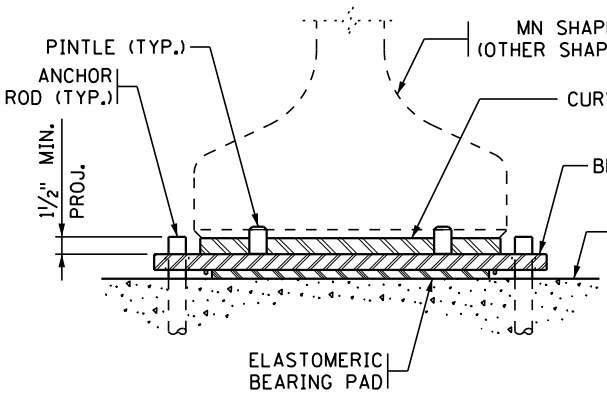

SECTION X-X

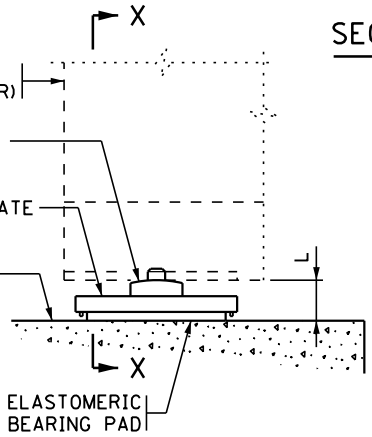

SIDE ELEVATION

ANCHOR RODS NOT SHOWN

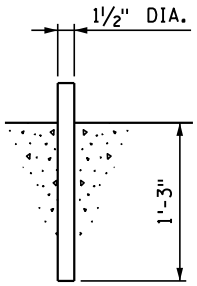

ANCHOR ROD DETAIL

TABLE

ASSEMBLY TYPE	LOCATION	BEAM SIZE	BEARING PAD SIZE			SHAPE FACTOR	BEARING PLATE SIZE			CURVED PLATE SIZE				ANCHOR ROD OFFSET		ASSY. HEIGHT	RESTRAINT PATTERN ③
			A	B	D		C	E	F	G	H	J	R ①	+/- ②	M	L	
		__RB, __M, MN__	12"	24"	½"	8.0	14"		1½"	4½"	26"	1¼"				3¼"	A-1
		__MW	16"	36"	½"	11.1	18"	47"	1½"	4½"	38"	1¼"				3¼"	A-2
		__MH	12"	30"	½"	8.6	14"	47"	1½"	4½"	32"	1¼"				3¼"	A-3

NOTES:

PROVIDE ELASTOMERIC MATERIALS AND PAD CONSTRUCTION IN ACCORDANCE WITH SPEC. 3741.

PROVIDE STEEL PLATES IN ACCORDANCE WITH SPEC. 3306.

PROVIDE ANCHOR RODS IN ACCORDANCE WITH SPEC. 3306. GALVANIZE IN ACCORDANCE WITH SPEC. 3394.

PROVIDE PINTLES IN ACCORDANCE WITH SPEC. 3309.

GALVANIZE STRUCTURAL STEEL BEARING ASSEMBLY AFTER FABRICATION IN ACCORDANCE WITH SPEC. 3394, EXCEPT AS NOTED.

PAYMENT FOR BEARING ASSEMBLY INCLUDES ALL MATERIAL ON THIS DETAIL.

① THE MIN. RADIUS IS 16" UNLESS OTHERWISE SPECIFIED IN THE TABLE. THE MAX. RADIUS IS 24". FINISH TO 250 MICRO. THE FINISHED THICKNESS OF THE PLATE MAY BE 1/16" LESS THAN SHOWN.

② "+" DENOTES OFFSET AS SHOWN.
"-" DENOTES OFFSET OPPOSITE OF SHOWN.

③ REFER TO BEARING PAD RESTRAINT B-DETAIL FOR ADDITIONAL INFORMATION AND DETAILS.

DESIGNER NOTE (REMOVE PRIOR TO PLOTTING FINAL PLAN):

INSERT TABLE VALUES AS NEEDED AND DELETE UNUSED DATA.

MINIMUM SIZE OF BEARING PAD,
12" x 24" x ½", FOR RB, M, & MN SHAPES
16" x 36" x ½", FOR MW SHAPES
12" x 30" x ½", FOR MH SHAPES

USE BEARING PLATE SIZE DIMENSION "E" OF 34" FOR RB AND M SHAPE, 38" FOR MN SHAPE.

FOR PARAPET AND SEMI-INTEGRAL ABUTMENT BRIDGES ON GRADES EXCEEDING 3%, MODIFY THIS DETAIL TO PROVIDE A TAPERED BEARING PLATE PER DETAIL B309.

PER NOTE ③ INCLUDE B307 AND MODIFY AS NECESSARY.

DESIGN DATA:

MAX. FACTORED SHEAR RESISTANCE:
- 50.3 KIPS PER 1½" DIA. PINTLE
- 36.2 KIPS PER 1½" DIA. ANCHOR ROD

APPROVED: DECEMBER 20, 2018	STATE OF MINNESOTA DEPARTMENT OF TRANSPORTATION	REVISED 10-22-2019	DETAIL NO.
Kevin Western STATE BRIDGE ENGINEER	CURVED PLATE BEARING ASSEMBLY (PRESTRESSED CONCRETE BEAMS) (FIXED)		B310