MINNESOTA DEPARTMENT OF TRANSPORTATION

CONSTRUCTION PLAN FOR TRAFFIC CONTROL SIGNAL SYSTEMS, INTERCONNECT AND ADA IMPROVEMENTS

AT THE INTERSECTION OF: T.H. 156 AT C.S.A.H. 14 (GRAND AVE.), SOUTH ST. PAUL MN, DAKOTA COUNTY

STATE PROJ. NO. XXXX-XXX
REF POINT XXX+XX.XXX

ABBREVIATIONS

AWF	ADVANCE WARNING FLASHER
C.D.	COUNT DOWN
D2-1 (e.g.)	DETECTOR (PHASE 2, NO. 1)
DEG	DEGREES
DWK	DON'T WALK
F&I	FURNISH AND INSTALL
FL	FLASH/FLASHING
FYA	FLASHING YELLOW ARROW
FYLA	FLASHING YELLOW LEFT ARROW
GLA	GREEN LEFT ARROW
GRN	GREEN INDICATION
GR. RD.	GROUND ROD
GRA	GREEN RIGHT ARROW
GTA	GREEN THRU ARROW
HH	HANDHOLE
IND	INDICATION
INP	INPLACE
INS. GR.	INSULATED GROUND
JB	JUNCTION BOX
LED	LIGHT EMITTING DIODE
LUM	LUMINAIRE
NEU	NEUTRAL
P1-1 (e.g.)	PEDESTRIAN HEAD (PHASE 1, NO. 1)
PB	PUSH BUTTON
PB2-1 (e.g.)	PUSH BUTTON (PHASE 2, NO. 1)
PED	PEDESTRIAN
RED	RED INDICATION
R&S	REMOVE AND SALVAGE
RLA	RED LEFT TURN ARROW
S&I	SALVAGE AND INSTALL
SPR	SPARE
STA	STATION
WLK	WALK INDICATION
YEL	YELLOW INDICATION
YLA	YELLOW LEFT ARROW
YRA	YELLOW RIGHT ARROW

SYMBOLS

- HANDHOLE
- EQ.G CONNECTION
- EVP CONFIRMATORY LIGHT
- EVP DETECTOR
- EVP DETECTOR AND CONFIRMATORY LIGHT
- SPLICE
- FIBER OPTIC SPLICE VAULT
- PULL VAULT
- LUMINAIRE NO.
- SIGNAL BASE NO.
- SIGNAL HEAD NO./FLASHER HEAD NO.
- BARREL MOUNT BASE NO.
- WOOD POLE NO.
- TELEVISION CAMERA (CCTV)
- VIDEO DETECTION

FOR PLANS AND UTILITIES SYMBOLS SEE TECHNICAL MANUAL

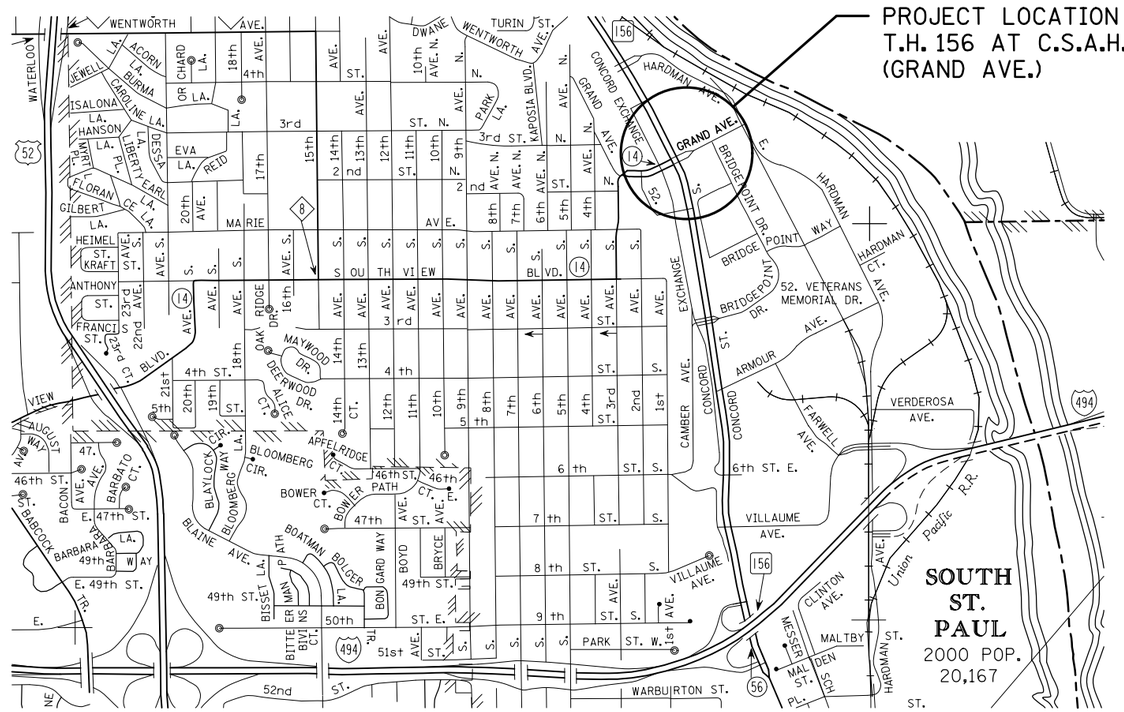

INDEX MAP

2000

SCALE IN FEET

FED. PROJ. NO. STATE FUNDS

GOVERNING SPECIFICATIONS

THE 2018 EDITION OF THE MINNESOTA DEPARTMENT OF TRANSPORTATION "STANDARD SPECIFICATIONS FOR CONSTRUCTION" SHALL GOVERN.

ALL TRAFFIC CONTROL DEVICES SHALL CONFORM TO THE MN MUTCD, INCLUDING FIELD MANUAL FOR TEMPORARY TRAFFIC CONTROL ZONE LAYOUTS.

INDEX

1	TITLE SHEET
2	STATEMENT OF ESTIMATED QUANTITIES
3-14	DETAIL SHEETS
15	INTERSECTION LAYOUT
16	MATCH LINE LAYOUT/INTERSECTION NOTES
17-18	FIELD WIRING DIAGRAMS
19	PAVEMENT MARKINGS & SIGNS
20	UTILITIES LAYOUT

THIS PLAN CONTAINS 20 SHEETS

I HEREBY CERTIFY THAT THIS PLAN WAS PREPARED BY ME OR UNDER MY DIRECT SUPERVISION AND THAT I AM A DULY LICENSED PROFESSIONAL ENGINEER UNDER THE LAWS OF THE STATE OF MINNESOTA.

TYPED NAME _____ LIC. NO. XXXXX DATE: _____

DESIGN SQUAD XXXXX

APPROVED _____ CITY OF ENGINEER DATE: _____

APPROVED _____ COUNTY ENGINEER DATE: _____

RECOMMENDED FOR APPROVAL _____ DISTRICT TRANSPORTATION ENGINEER DATE: _____

RECOMMENDED FOR APPROVAL _____ DATE: _____

RECOMMENDED FOR APPROVAL _____ DISTRICT TRAFFIC ENGINEER DATE: _____

RECOMMENDED FOR APPROVAL _____ STATE PRE- LETTING ENGINEER DATE: _____

OFFICE OF LAND MANAGEMENT APPROVAL _____ DIRECTOR, LAND MANAGEMENT DATE: _____

APPROVED _____ STATE DESIGN ENGINEER DATE: _____

_____ DISTRICT STATE AID ENGINEER: REVIEWED FOR COMPLIANCE WITH STATE AID RULES/POLICY DATE: _____

_____ APPROVED FOR STATE AID FUNDING: STATE AID ENGINEER DATE: _____

I HEREBY CERTIFY THAT THE FINAL FIELD REVISIONS, IF ANY, OF THIS PLAN WERE MADE BY ME OR UNDER MY DIRECT SUPERVISION AND THAT I AM A DULY LICENSED PROFESSIONAL ENGINEER UNDER THE LAWS OF THE STATE OF MINNESOTA.

PRINTED NAME: _____ LIC. NO. _____ DATE: _____

STANDARD PLATES - SIGNAL SYSTEMS

THE FOLLOWING STANDARD PLATES, APPROVED BY THE FEDERAL HIGHWAY ADMINISTRATION, SHALL APPLY ON THIS PROJECT

PLATE NO.		DESCRIPTION	PLATE NO.		DESCRIPTION
► 7038	A	DETECTABLE WARNING SURFACE TRUNCATED DOMES	► 8122	F	PEDESTAL AND PEDESTAL BASE
► 7113	A	CONCRETE APPROACH NOSE DETAIL	► 8123	G	POLE AND MAST ARM
▷ 8111	E	TRAFFIC SIGNAL BRACKETING (PEDESTAL MOUNTED)	► 8126	L	POLE FOUNDATION (PA90 AND PA100)
► 8112	I	PEDESTAL FOUNDATION	► 8129	A	SHIM AND WASHER
▷ 8117	G	PRECAST CONCRETE HAND HOLE	▷ 8130	E	SAW CUT LOOP DETECTORS
▷ 8118	D	SERVICE EQUIPMENT AND POLE	► 8132	B	PREFORMED RIGID PVC CONDUIT LOOP DETECTOR
► 8119	C	GROUND MOUNTED CABINET FOUNDATION			
▷ 8120	Q	POLE FOUNDATION (PA-85)			
► 8121	H	TRANSFORMER BASE AND POLE BASE PLATE			

► STANDARD PLATES APPLICABLE TO THIS PROJECT

STATE PROJECT NO.	CHARGE IDENTIFIER
XXXX-XX	

PLAN REVISIONS

DATE	SHEET NO.	APPROVED BY

S.A.P. NO. XXX-XXX-XXX | STATE PROJ.NO. XXXX-XX (T.H.156=112) | SHEET NO. 1 OF 20 SHEETS

PLOTTED/REVISED: 21-FEB-2018

DISTRICT #: Metro
IPLOT NAME: 001 title (1)
PATH & FILENAME: OTST\Signals\SamplePlan\Sample Plan (2-21-18).dgn

PLOTTED/REVISED: 21-FEB-2018

DISTRICT #: Metro
IPLOT NAME: 002 est quantities (2)
PATH & FILENAME: OTST\Signals\SamplePlan\Sample Plan (2-21-18).dgn

STATEMENT OF ESTIMATED QUANTITIES				COST BREAKDOWN			
ITEM NO.	DESCRIPTION	UNIT	TOTAL ESTIMATED QUANTITIES	STATE SP XXXX-XX	COUNTY SAP XXX-XXX-XXX	FEDERAL SP XXXX-XX	CITY SAP XXX-XXX-XXX
2021.501	MOBILIZATION	LUMP SUM					
2104.501	REMOVE CURB AND GUTTER	LIN FT					
2104.503	REMOVE CONCRETE WALK	SQ FT					
2104.503	REMOVE BRICK MEDIAN	SQ FT					
2104.503	REMOVE BRICK SIDEWALK	SQ FT					
2104.603	REMOVE AND REPLACE BITUMINOUS PAVEMENT	LIN FT					
2104.618	SALVAGE BRICK PAVERS	SQ FT					
2232.603	MILL AND PATCH BITUMINOUS PAVEMENT	LIN FT					
2521.618	CONCRETE WALK	SQ FT					
2531.603	CONCRETE CURB AND GUTTER	LIN FT					
2565.511	CONCRETE CURB DESIGN V	LIN FT					
2531.618	TRUNCATED DOMES	SQ FT					
2563.601	TRAFFIC CONTROL	LUMP SUM					
2565.511	TRAFFIC CONTROL SIGNAL SYSTEM	SIG SYS					
2565.601	EMERGENCY VEHICLE PREEMPTION SYSTEM	LUMP SUM					
2565.601	TRAFFIC CONTROL INTERCONNECTION	LUMP SUM					
2565.616	REVISE SIGNAL SYSTEM	SYSTEM					

BY	DATE	REVISIONS

SYSTEM ID: XXXXX T.E. XXXX
METER ADDRESS: 9999 GRAND AVE.
OLD SYSTEM ID:

STATEMENT OF ESTIMATED QUANTITIES
T.H. 156 AT C.S.A.H. 14 (GRAND AVE.)
IN SOUTH ST. PAUL, DAKOTA COUNTYXXXXX

S.A.P. NO. | DRAWN BY: | CKD BY: DATE:

CERTIFIED BY _____ LICENSED PROFESSIONAL ENGINEER LIC. NO. _____ DATE: _____

STATE PROJ.NO. XXXX-XX (T.H.156) SHEET NO. 2 OF 20 SHEETS

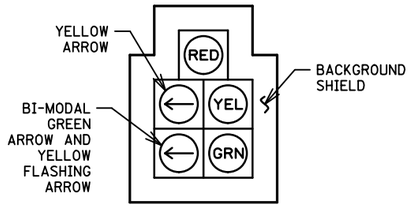

5 SECTION FYA CLUSTER HEAD DETAIL

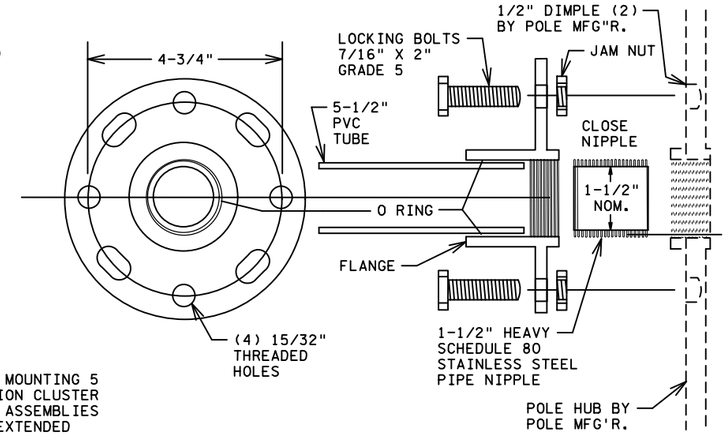

THREADED HUB AND FLANGE POLE ADAPTOR

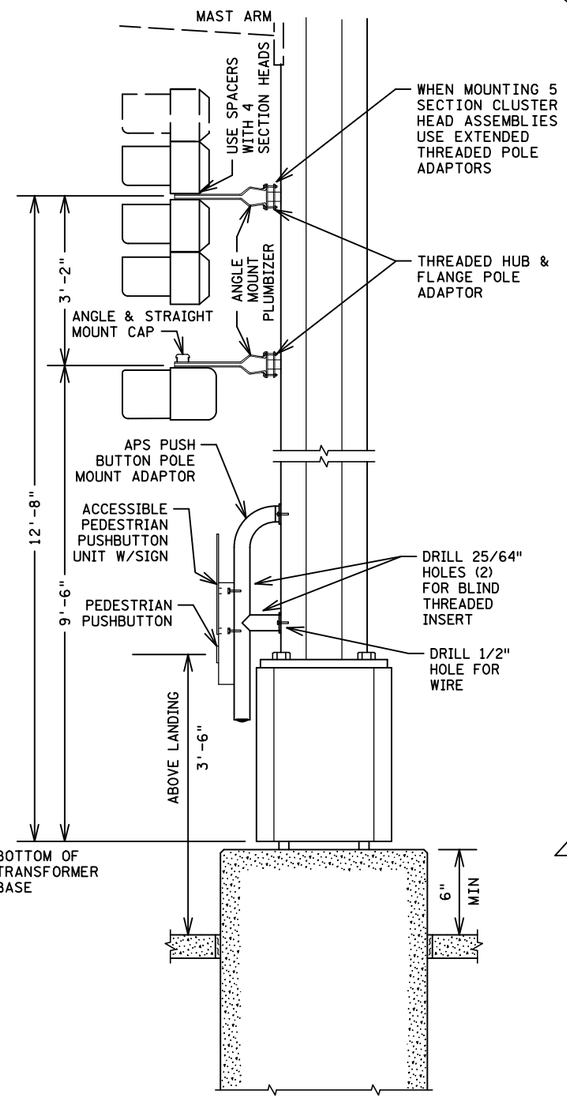

TYPICAL SIGNAL POLE MOUNTING

NOT TO SCALE

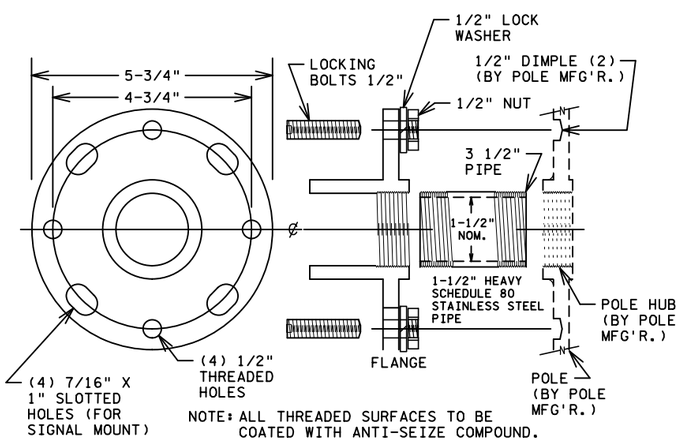

NOTE: ALL THREADED SURFACES TO BE COATED WITH ANTI-SEIZE COMPOUND.

EXTENDED THREADED POLE ADAPTER

NOTES:

1. ALL THREADED SURFACES TO BE COATED WITH ANTI-SEIZE COMPOUND.
2. USE SIGNAL HEAD MOUNTED SPACERS FOR 4 SECTION POLY HEADS.
3. SEE STANDARD PLATE NUMBER 8123 FOR ADDITIONAL SIGNAL POLE DETAILS.
4. EXTENDED THREADED POLE ADAPTOR ONLY USED WITH 5 SECTION CLUSTER HEADS.

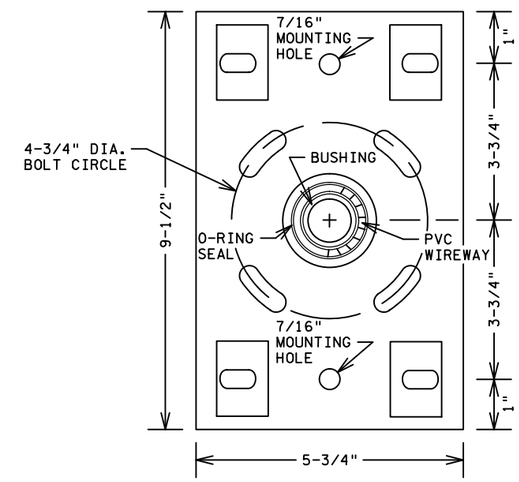

BOLT ON HUB & FLANGE

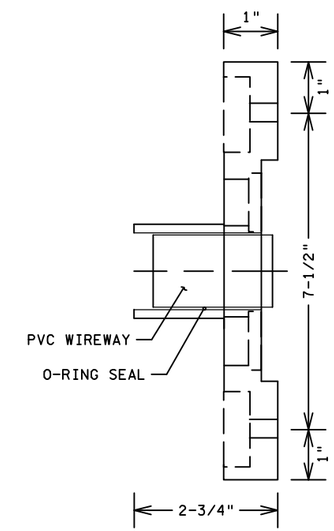

SIDE VIEW

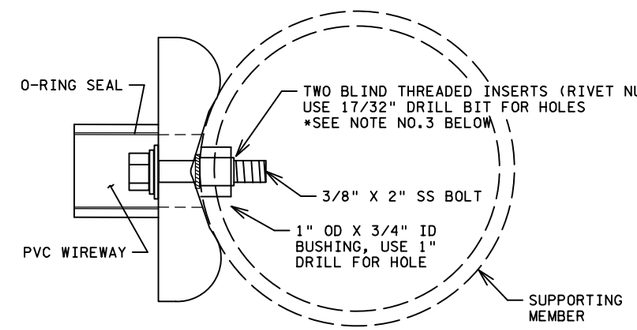

TOP VIEW

NOTES:

1. ALL THREADED SURFACES TO BE COATED WITH ANTI-SEIZE COMPOUND.
2. USE SIGNAL HEAD MOUNTED SPACERS FOR 4 SECTION POLY HEADS.
3. BLIND THREADED INSERTS (RIVET NUT) MUST BE INSERTED USING MANUFACTURERS SPECIFIC INSERTION TOOL. NO OTHER METHOD IS ACCEPTABLE.
4. SEE STANDARD PLATE NUMBER 8122 FOR ADDITIONAL PEDESTAL POLE DETAILS.

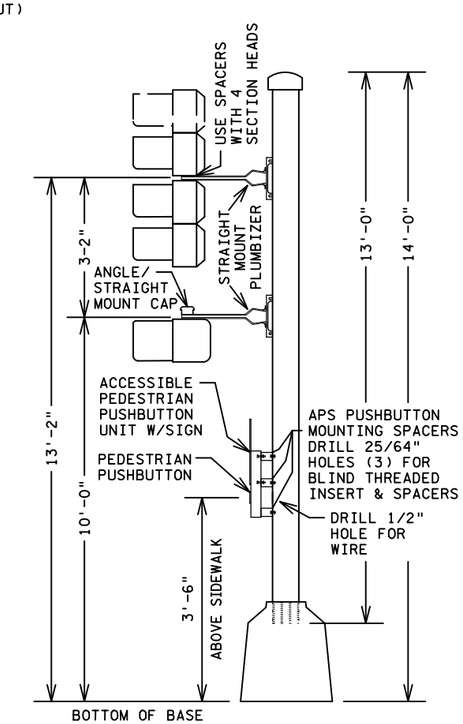

TYPICAL PEDESTAL MOUNTING

NOT TO SCALE

BY	DATE	REVISIONS

SYSTEM ID: XXXXX T.E. XXXX
METER ADDRESS: 9999 GRAND AVE.
OLD SYSTEM ID:

POLE MOUNT DETAIL

S.A.P. NO. | DRAWN BY: | CKD BY: | DATE:

CERTIFIED BY _____ LICENSED PROFESSIONAL ENGINEER LIC. NO. _____ DATE: _____

STATE PROJ.NO. XXXX-XX (T.H.156) SHEET NO. 3 OF 20 SHEETS

PLOTTED/REVISED: 21-FEB-2018
DISTRICT #: Metro
IPLOT NAME: 003 pole mount detail (3)
PATH & FILENAME: OTST\Signals\SamplePlan\Sample Plan (2-21-18).dgn

APS PUSH BUTTON STATION

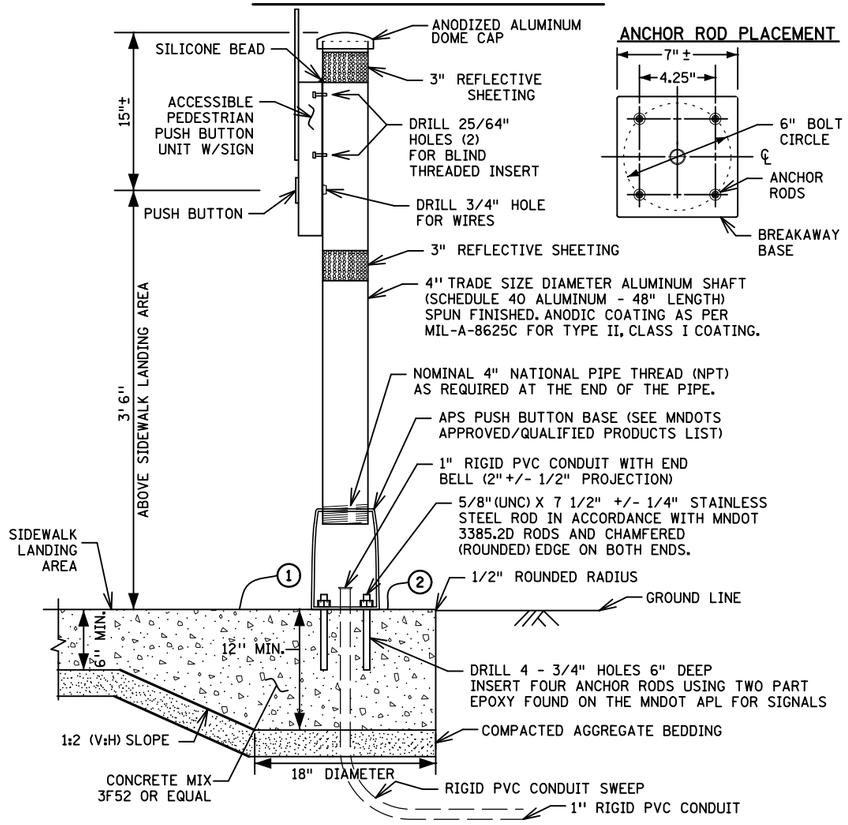

ANCHOR ROD PLACEMENT

TYPICAL APS PEDESTRIAN PUSH BUTTON LOCATION

THIS IS A GENERAL DETAIL INTENDED TO SHOW THE REQUIREMENTS OF APS PUSH BUTTON LOCATION. FOR PROJECT SPECIFIC INFORMATION REGARDING PEDESTRIAN RAMP LAYOUT AND PUSH BUTTON LOCATIONS, SEE THE PLAN.

SUPPLEMENTAL GUIDANCE FOR CONSTRUCTING COMPLIANT APS PUSH BUTTONS:

1. THE FACE OF THE BUTTON SHALL BE PARALLEL WITH THE OUTSIDE EDGE OF CROSSWALK.
2. A MINIMUM 4 FT X 4 FT LANDING AREA SHALL BE PROVIDED ADJACENT TO EACH BUTTON, WITH A 2 PERCENT MAXIMUM SLOPE IN ALL DIRECTIONS.
3. BUTTONS SHALL BE WITHIN 5 FT OF THE OUTSIDE EDGE OF THE CROSSWALK.
4. BUTTONS SHALL BE BETWEEN 1.5 FT AND 10 FT FROM THE BACK OF CURB OR EDGE OF ROADWAY, MEASURED IN THE DIRECTION OF TRAVEL. STANDALONE PUSH BUTTON STATIONS SHOULD BE 4' MINIMUM FROM THE BACK OF CURB TO AVOID KNOCKDOWNS.
5. BUTTONS MINIMUM 10 FT APART.
6. PROVIDE A MAINTENANCE ACCESS ROUTE (MAR) WHEREVER POSSIBLE FOR SNOW REMOVAL PURPOSES. A MAR REQUIRES A 6 FT MINIMUM CLEAR DISTANCE BETWEEN A PUSH BUTTON AND ANY OBSTRUCTIONS, INCLUDING BUILDINGS, V-CURB, ELECTRICAL FOUNDATIONS, SIGNAL CABINETS, OR ANOTHER PUSH BUTTON.
7. BUTTON SHOULD BE 2 FT MINIMUM FROM RAMP GRADE BREAK AND BACK OF WALK.

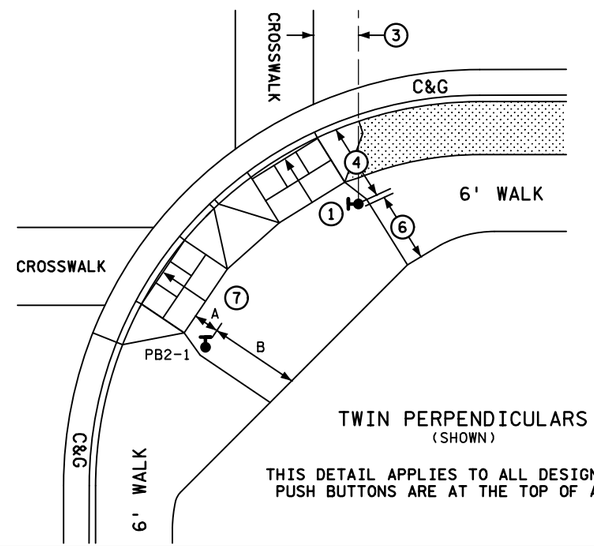

TWIN PERPENDICULARS
(SHOWN)

THIS DETAIL APPLIES TO ALL DESIGNS WHEN PUSH BUTTONS ARE AT THE TOP OF A RAMP

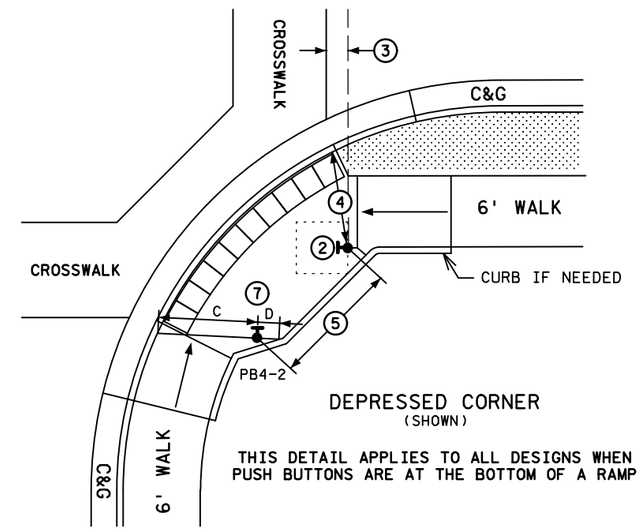

DEPRESSED CORNER
(SHOWN)

THIS DETAIL APPLIES TO ALL DESIGNS WHEN PUSH BUTTONS ARE AT THE BOTTOM OF A RAMP

CONTRACTOR MUST USE OPTION 1 OR 2 WHEN THE APS PUSH BUTTON IS SHOWN AT THE EDGE OF WALK. OPTION USED (OR SELECTED) MUST BE THE SAME THROUGHOUT THE ENTIRE PROJECT.

OPTION 1

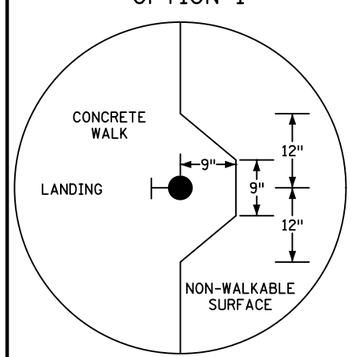

OPTION 2

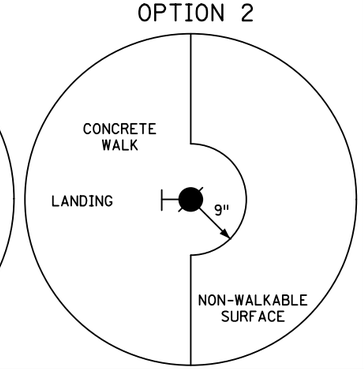

SIGNAL CONTROL POINTS			DISTANCE TO FRONT OF LANDING (FT)	DISTANCE TO BACK OF LANDING (FT)
SIGNAL NO.	X	Y		
PB2-1	-	-	A	B
PB4-2	-	-	C	D

A - DISTANCE MEASURED FROM THE PUSH BUTTON TO THE FRONT OF LANDING/TOP OF RAMP

B - CLEAR DISTANCE MEASURED FROM THE PUSH BUTTON TO THE BACK OF LANDING/EDGE OF WALK

C - CLEAR DISTANCE MEASURED FROM THE PUSH BUTTON TO THE OUTSIDE EDGE OF DOMES IN THE DIRECTION OF TRAVEL

D - CLEAR DISTANCE FROM THE PUSH BUTTON TO THE BACK OF LANDING MEASURED IN THE OPPOSITE DIRECTION OF TRAVEL

NOTES:

PLACEMENT AND ORIENTATION OF THE PUSH BUTTON STATION IS CRITICAL. MOUNT THE BUTTON SO THAT THE FACE IS PARALLEL WITH THE ASSOCIATED CROSSWALK. SCREW IN SHAFT TO A TIGHTENED POSITION BEFORE MOUNTING ACCESSIBLE PEDESTRIAN PUSH BUTTON UNIT TO THE SHAFT.

ORIENT ACCESS OPENING ON THE BREAKAWAY PEDESTAL DIRECTLY BELOW THE APS BUTTON.

PLUMB THE PUSH BUTTON STATION WITH LEVELING SHIMS IN ACCORDANCE WITH STANDARD PLATE 8129.

INSTALL BLIND THREADED INSERTS USING MANUFACTURER'S SPECIFIC INSERTION TOOL.

USE ZINC PLATED STEEL 1/4 - 20 UNC BLIND THREADED INSERTS SUITABLE FOR MOUNTING ON SURFACE WALL THICKNESS OF .337. APPROVED BLIND INSERTS ARE LISTED ON MNDOT'S APPROVED/QUALITY PRODUCTS LIST WEBSITE FOR TRAFFIC SIGNALS.

USE APS 1/4 - 20 STAINLESS STEEL MOUNTING BOLTS. APPLY BRUSH ON ANTI SEIZE COMPOUND TO BOLTS PRIOR TO ASSEMBLY.

APPLY A BEAD OF 100% SILICONE SEALANT ALONG THE TOP OF THE PUSH BUTTON UNIT WHERE IT COMES IN CONTACT WITH THE 4" SHAFT.

USE WHITE REFLECTIVE SHEETING AT INTERSECTION CORNERS AND YELLOW REFLECTIVE SHEETING IN CENTER MEDIANS. APPROVED TUBE DELINEATOR SHEETING IS LISTED ON MNDOT'S APPROVED/QUALIFIED PRODUCTS LIST WEBSITE FOR SIGNING.

AN 18" X 6" FIBER FORMING TUBE MAY BE USED FOR THE LOWER HALF OF THE FOUNDATION WHEN CONDITIONS DO NOT ALLOW FOR THE 18" X 6" HOLE TO STAND OPEN.

1. THE PUSH BUTTON STATION FOUNDATION IS MONOLITHIC (POURED AT ONE TIME) WITH THE SIDEWALK. PROVIDE A 1:2 (V:H) SLOPE GRADE WHERE THE 6" MIN SIDEWALK DEPTH TRANSITIONS TO THE 12" MIN FOUNDATION DEPTH. MAINTAIN THE COMPACTED AGGREGATE BEDDING AND THICKNESS USED FOR THE SIDEWALK THROUGHOUT THE SLOPE AND FOUNDATION GRADING. PROVIDE 1:2 (V:H) SLOPE GRADING 360 DEGREES FOR THE TRANSITION FROM THE SIDEWALK TO THE FOUNDATION WHEN THE FOUNDATION IS NOT LOCATED NEAR EDGE OF SIDEWALK AND IS SURROUNDED BY CONCRETE WALK.
2. ENSURE CONCRETE CONTROL JOINTS AND EDGE OF CONCRETE WALK ARE A MINIMUM 9" FROM THE CENTER OF THE PUSH BUTTON FOUNDATION.

BY	DATE	REVISIONS

SYSTEM ID: XXXXX T.E. XXXX
METER ADDRESS: 9999 GRAND AVE.
OLD SYSTEM ID:

ACCESSIBLE PEDESTRIAN SIGNAL (APS)
PEDESTRIAN PUSH BUTTON STATION
TYPICAL APS PUSH BUTTON LOCATION DETAIL

S.A.P. NO. | DRAWN BY: | CKD BY: | DATE:
CERTIFIED BY _____ LICENSED PROFESSIONAL ENGINEER LIC. NO. _____ DATE: _____
STATE PROJ.NO. XXXX-XX (T.H.156) SHEET NO. 4 OF 20 SHEETS

PLOTTED/REVISED: 21-FEB-2018
DISTRICT #: Metro
IPLOT NAME: 004 APS pb detail (4)
PATH & FILENAME: OTST\Signals\SamplePlan\Sample Plan (2-21-18).dgn

350 ATCC AND SSB CABINET EQUIPMENT PAD
CAST IN-PLACE

SEE INTERSECTION LAYOUT FOR CABLE INFORMATION (NOT TO SCALE)

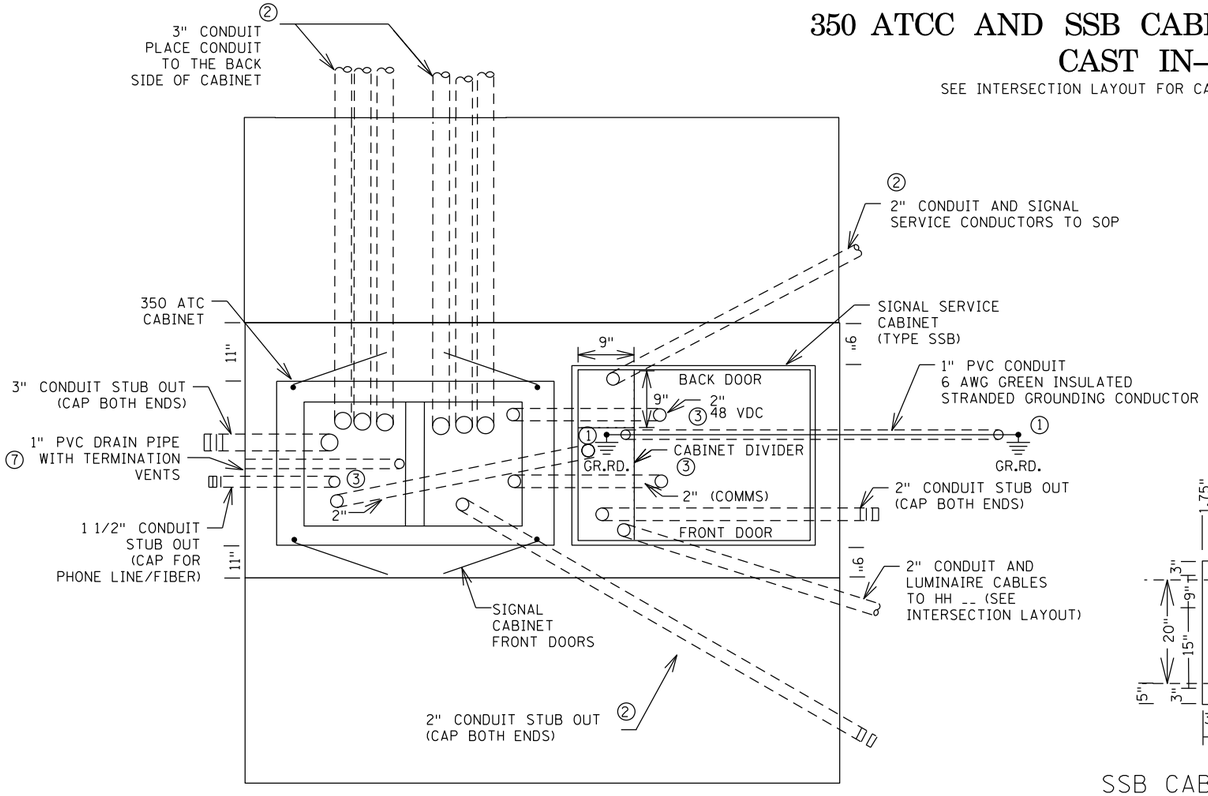

PLAN VIEW

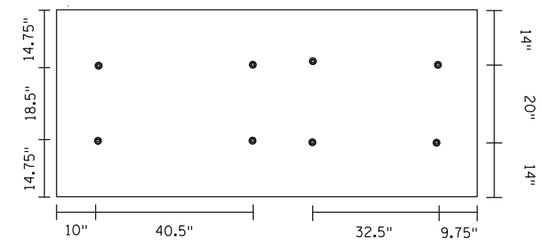

ANCHOR ROD LOCATION DETAIL

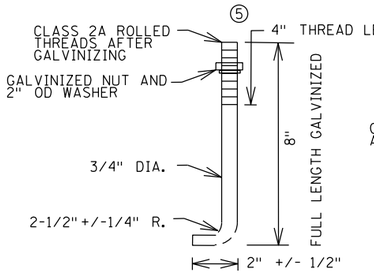

WET CAST
ANCHOR ROD DETAIL

(SPEC. 3385 TYPE A OR TYPE B AND GALVANIZED IN ACCORDANCE WITH SPEC. 3392)

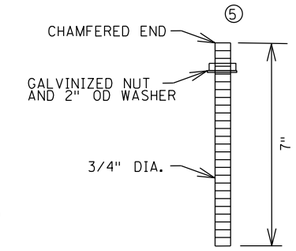

EPOXY ADHESIVE
ANCHOR ROD DETAIL

(SPEC. 3385 TYPE A OR TYPE B AND GALVANIZED IN ACCORDANCE WITH SPEC. 3392)

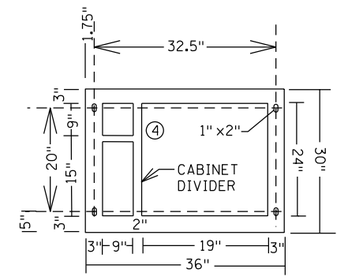

SSB CABINET BASE TEMPLATE

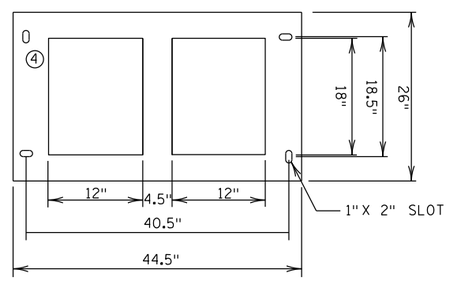

350 CABINET BASE TEMPLATE

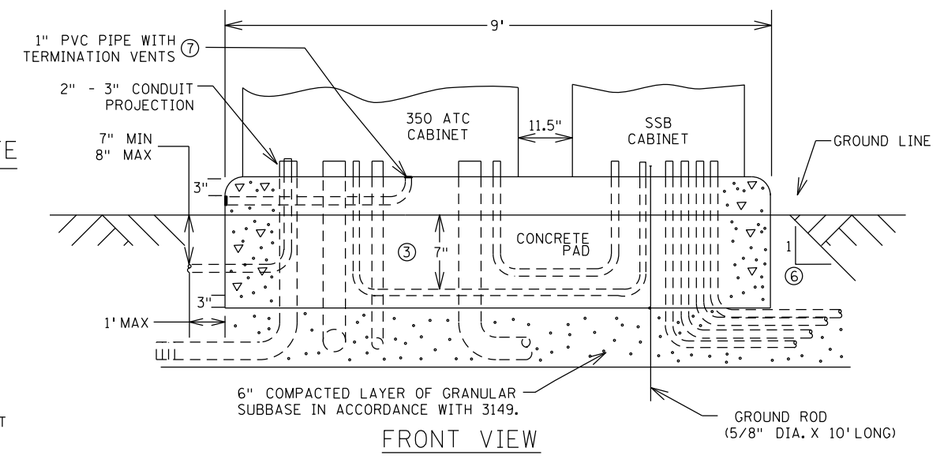

FRONT VIEW

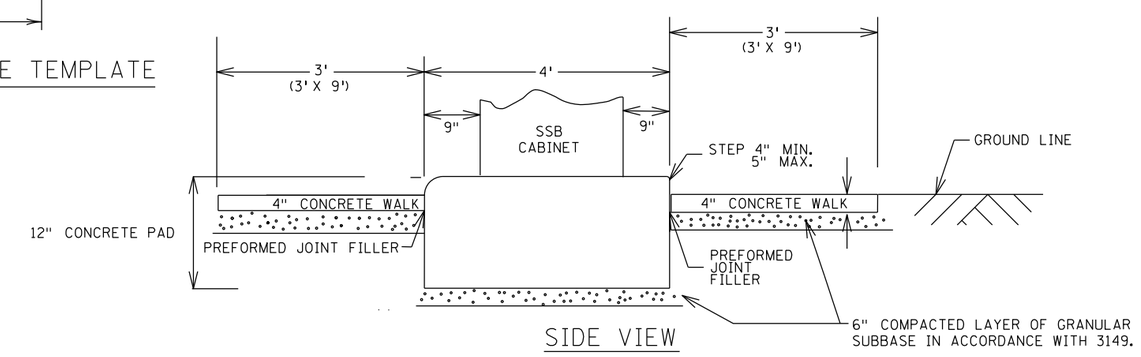

SIDE VIEW

NOTES:

FOR THE EQUIPMENT PAD USE CONCRETE MIX 3G52 WITH APPROVED NON-METALLIC FIBERS FOR REINFORCEMENT LISTED ON MnDOT'S APPROVED/QUALIFIED PRODUCTS LIST UNDER CONCRETE "NONMETALLIC FIBERS". ADD FIBERS TO THE CONCRETE MIX IN ACCORDANCE WITH THE NON-METALIIC FIBERS MANUFACTURERS INSTRUCTIONS AND CONTRACT DOCUMENTS.

FOR CONCRETE WALK USE CONCRETE MIX 3G52. 3G52 CONCRETE MIX WITH NON-METALLIC FIBERS MAY BE USED FOR THE CONCRETE WALK AND POLE FOUNDATIONS. DO NOT USE NON-METALLIC FIBERS AS A SUBSTITUTE FOR THE REQUIRED REINFORCEMENT IN ACCORDANCE WITH THE POLE FOUNDATION STANDARD PLATES.

① PLACE A GROUNDING ELECTRODE SYSTEM IN ACCORDANCE WITH THE GROUNDING ELECTRODE SYSTEM DETAIL ON SHEET 3 OF STANDARD PLATE NUMBER 8106 EXCEPT FURNISH AND INSTALL 10 FOOT LONG GROUND ROD ELECTRODES, 6 AWG GREEN INSULATED COPPER CONDUCTOR AND EXOTHERMIC WELDED CONNECTIONS.

② CONDUIT SIZE, QUANTITY AND DIRECTION MAY VARY. FURNISH AND INSTALL CONDUITS AS SPECIFIED ON THE INTERSECTION LAYOUT PLAN SHEET.

③ ENSURE THE CONDUITS FULLY ENCASED IN CONCRETE FROM ONE CABINET TO THE OTHER ARE PLACED AT THE CORRECT DEPTH AND LOCATION TO AVOID INTERFERENCE WITH THE INSTALLATION OF THE ANCHOR RODS.

④ USE TEMPLATES WITH THE DIMENSIONS SHOWN INCLUDING OPENINGS, DIVIDERS, ANCHOR ROD HOLES AS A GUIDE TO ENSURE PROPER PLACEMENT OF THE CABINETS, CONDUITS AND ANCHOR RODS. 350 BASE OPENINGS FOR TEMPLATE ARE SMALLER THAN THE ACTUAL BASE OPENINGS.

⑤ PLACE ANCHORS 1 3/4 INCHES - 2 1/4 INCHES ANCHOR ROD PROJECTION ABOVE THE CONCRETE PAD. FURNISH AND INSTALL ANCHOR RODS SHOWN IN THE ANCHOR ROD DETAIL FOR WET CASTING ANCHORS IN WET CONCRETE. FURNISH AND INSTALL ANCHOR RODS SHOWN IN THE ANCHOR ROD DETAIL FOR EPOXY ADHESIVE IF USING ADHESIVE ANCHORS. INSERT ANCHOR RODS IN 7/8 INCH DIAMETER DRILLED HOLES, 5 INCHES DEEP WITH AN APPROVED EPOXY ADHESIVE LISTED ON MnDOT'S APPROVED/QUALIFIED PRODUCTS LIST (ACCESSIBLE PEDESTRIAN SIGNAL PUSH BUTTON BASE ADHESIVE ANCHORING). DO NOT USE MECHANICAL OR CONCRETE WEDGE ANCHORS.

⑥ IF THE SITE CONDITIONS REQUIRE THE PAD TO BE PLACED WITHIN A SLOPE, INCREASE THE THICKNESS OF THE PAD BY 6 INCHES. SHAPE THE TERRAIN AROUND THE PAD FOR POSITIVE DRAINAGE.

⑦ FURNISH AND INSTALL A DRAIN IN THE PAD USING 1 INCH PVC SCH. 40 PIPE FOR PLUMBING. PLACE PVC TERMINATION VENT SCREEN DESIGNED FOR PVC PIPE AT EACH END OF THE PIPE. PROVIDE PVC TERMINATION VENTS WITH A STAINLESS STEEL SCREEN. ENSURE THE TERMINATION VENT SCREEN AND PIPE ARE FLUSH WITH THE TOP AND SIDE OF THE PAD AND PROTECT FROM CONCRETE INTRUSION BEFORE CONCRETE PLACEMENT OPERATIONS.

BY	DATE	REVISIONS

SYSTEM ID: _____ T.E. ____
METER ADDRESS: _____
OLD SYSTEM ID: _____

350 ATCC EQUIPMENT PAD LAYOUT
(TYPE SSB SERVICE CABINET)

S.A.P. NO. _____ DRAWN BY: ___ CKD BY: ___ DATE: 11-25-19
CERTIFIED BY _____ LICENSED PROFESSIONAL ENGINEER LIC. NO. _____ DATE: _____
STATE PROJ.NO. _____ (T.H. _____ SHEET NO. ____ OF ____ SHEETS

PLOTTED/REVISED: $$$$@DATE@$$$$
DISTRICT #: $@DISTRICT@$
IPLOT NAME: $$@IPLOT$NAME@$$
PATH & FILENAME: $$$@PATHFILENAME@$$$

PLOTTED/REVISED: $$$$@DATE@$$$$
DISTRICT #: $@DISTRICT@$
IPLOT NAME: $$@IPLOT$NAME@$$
PATH & FILENAME: $$$@PATHFILENAME@$$$

CONDUCTOR COLOR CODE (14 GAUGE)

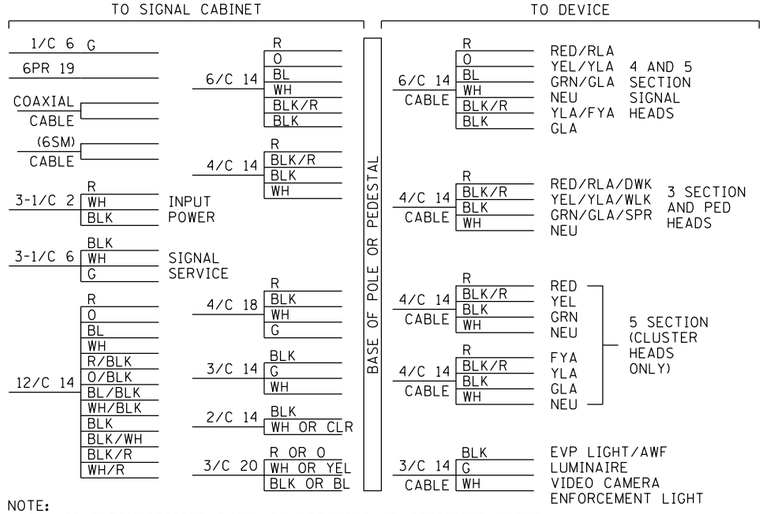

NOTE:
ALL POLE CONNECTIONS SHALL BE ARRANGED AS SPECIFIED ABOVE.

WIRE COLOR CODE KEY

R	Red
O	Orange
BL	Blue
WH	White
BLK	Black
BRN	Brown
CL	Clear
G	Green
R/BLK	Red with Black Stripe
O/BLK	Orange with Black Stripe
BL/BLK	Blue with Black Stripe
WH/BLK	White with Black Stripe
WH/R	White with Red Stripe
BLK/WH	Black with White Stripe
BLK/R	Black with Red Stripe

WIRE SPECIFICATION CHART

Type	Name	Specification Number
1/C 2	Power Conductors	3815.2B.1
1/C 6	Power Conductors	3815.2B.1
1/C 6 INS.GR.	Grounding Conductors	3815.2B.5
2/C 14	Loop Detector Lead-In Cable	3815.2C.4
3/C 14	Signal Control Cable	3815.2C.3
4/C 14	Signal Control Cable	3815.2C.3
6/C 14	Signal Control Cable	3815.2C.3
12/C 14	Signal Control Cable	3815.2C.3
6PR 19	Telephone Cables Outdoor	3815.2C.6.b
3/C 20	EVP Detector Cable	3815.2C.5

BY	DATE	REVISIONS

SYSTEM ID: XXXXX T.E. XXXX
METER ADDRESS: 9999 GRAND AVE.
OLD SYSTEM ID:

COLOR CODE CHART

S.A.P. NO. DRAWN BY: CKD BY: DATE:
CERTIFIED BY LICENSED PROFESSIONAL ENGINEER LIC. NO. DATE:
STATE PROJ.NO. XXXX-XX (T.H.156) SHEET NO. 6 OF 20 SHEETS

FIBER OPTIC SCHEMATIC
(FOR SIGNAL COMMUNICATIONS)

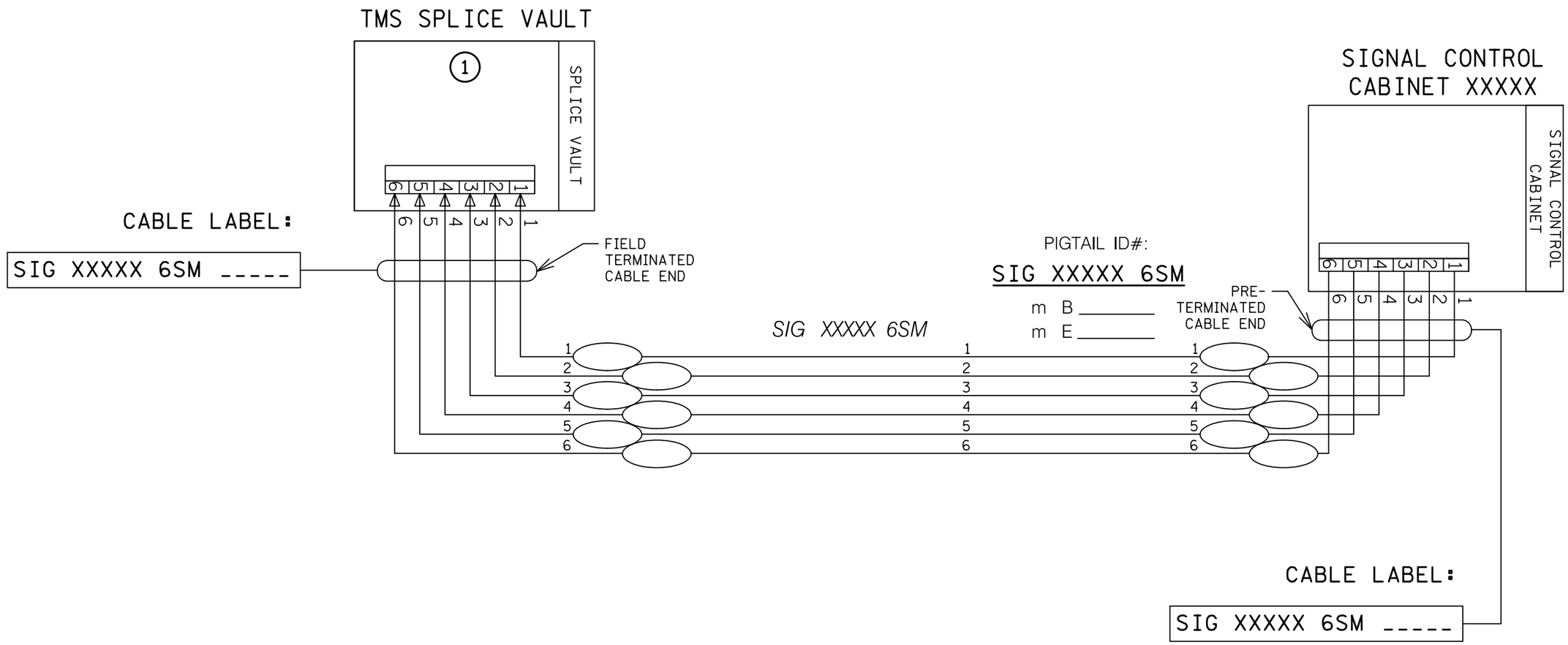

(1) SEE TMS PLAN FOR DETAILS ON CONNECTING, TESTING AND SPLICING.

PLOTTED/REVISED: 21-FEB-2018

DISTRICT #: Metro
IPLOT NAME: 007 fiber optic schem (7)
PATH & FILENAME: OTST\Signals\SamplePlan\Sample Plan (2-21-18).dgn

BY	DATE	REVISIONS

SYSTEM ID: XXXXX T.E. XXXX
METER ADDRESS: 9999 GRAND AVE.
OLD SYSTEM ID:

FIBER OPTIC SCHEMATIC
TRAFFIC CONTROL SIGNAL SYSTEM
T.H. 156 AT C.S.A.H. 14 (GRAND AVE.)
IN SOUTH ST. PAUL, DAKOTA COUNTY

S.A.P. NO. | DRAWN BY: | CKD BY: DATE:
CERTIFIED BY _____ LICENSED PROFESSIONAL ENGINEER LIC. NO. _____ DATE: _____
STATE PROJ.NO. XXXX-XX (T.H.156) SHEET NO. 7 OF 20 SHEETS

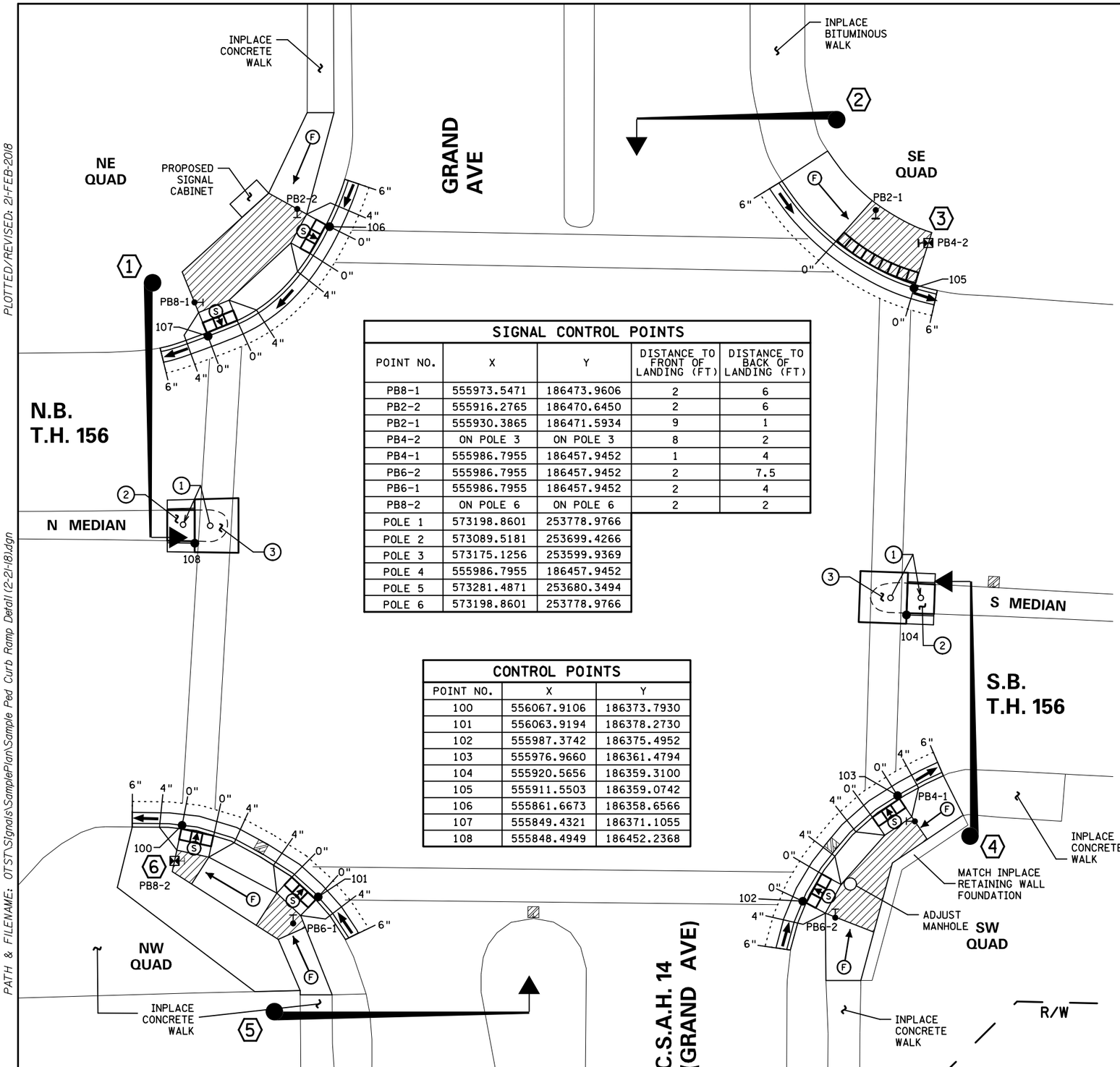

LEGEND

- PROPOSED SIGNAL POLE
- PEDESTRIAN PUSH BUTTON STATION
- PEDESTRIAN PUSH BUTTON
- XXX — CONTROL POINTS AT GUTTER FLOW LINE
- TRUNCATED DOMES (SEE STANDARD PLATE 7038)
- CONSTRUCT CONCRETE CURB & GUTTER
- BITUMINOUS TREATMENT-SEE TABULATIONS
- X" — CURB HEIGHT
- LANDING AREA - 4' X 4' MIN. DIMENSIONS AND MAX 2.0% SLOPE IN ALL DIRECTIONS
- (S) INDICATES PEDESTRIAN RAMP - SLOPE SHALL BE BETWEEN 5.0% MINIMUM AND 8.3% MAXIMUM IN THE DIRECTION SHOWN AND CROSS SLOPE SHALL NOT EXCEED 2.0%
- (F) INDICATES PEDESTRIAN RAMP - SLOPE SHALL BE GREATER THAN 2.0% AND LESS THAN 5.0% IN THE DIRECTION SHOWN AND CROSS SLOPE SHALL NOT EXCEED 2.0%
- DRAINAGE FLOW ARROW

20
SCALE IN FEET

SIGNAL CONTROL POINTS

POINT NO.	X	Y	DISTANCE TO FRONT OF LANDING (FT)	DISTANCE TO BACK OF LANDING (FT)
PB8-1	555973.5471	186473.9606	2	6
PB2-2	555916.2765	186470.6450	2	6
PB2-1	555930.3865	186471.5934	9	1
PB4-2	ON POLE 3	ON POLE 3	8	2
PB4-1	555986.7955	186457.9452	1	4
PB6-2	555986.7955	186457.9452	2	7.5
PB6-1	555986.7955	186457.9452	2	4
PB8-2	ON POLE 6	ON POLE 6	2	2
POLE 1	573198.8601	253778.9766		
POLE 2	573089.5181	253699.4266		
POLE 3	573175.1256	253599.9369		
POLE 4	555986.7955	186457.9452		
POLE 5	573281.4871	253680.3494		
POLE 6	573198.8601	253778.9766		

CONTROL POINTS

POINT NO.	X	Y
100	556067.9106	186373.7930
101	556063.9194	186378.2730
102	555987.3742	186375.4952
103	555976.9660	186361.4794
104	555920.5656	186359.3100
105	555911.5503	186359.0742
106	555861.6673	186358.6566
107	555849.4321	186371.1055
108	555848.4949	186452.2368

TABULATED QUANTITIES

LOCATION	REMOVE CONC. WALK	REMOVE CONC. CURB & GUTTER	MILL AND PATCH BITUMINOUS PAVEMENT	CONCRETE WALK	CONCRETE CURB & GUTTER	CONCRETE CURB DESIGN V	TRUNCATED DOMES	
							SQUARE	35' RAD SECTION
	SQ FT	LIN FT	LIN FT	SQ FT	LIN FT	LIN FT	SF	SF
NE QUAD	293	45	45	548	45	-	24	-
SE QUAD	110	31	31	329	31	-	-	40
S MEDIAN	59	26	26	28	26	-	-	-
SW QUAD	-	20	391	129	20	-	24	-
NW QUAD	275	20	592	377	20	-	24	-
N MEDIAN	60	26	-	29	10	-	-	-
TOTALS	797	168	983	1440	136	-	72	40

GENERAL NOTES:

- PROVIDE A SAWCUT AT THE REMOVAL LIMIT OR THE NEAREST JOINT OF THE CONCRETE WALK AND CONCRETE CURB & GUTTER. ALL SAWCUTS SHALL BE INCIDENTAL.
- LANDINGS SHALL BE CONNECTED TO EXISTING SIDEWALKS MAINTAINING A 4' WIDE (MINIMUM) PEDESTRIAN ACCESS ROUTE WITH A CROSS SLOPE THAT DOES NOT EXCEED 2.0% AND A RUNNING SLOPE THAT DOES NOT EXCEED 8.3%.
- ALL PERPENDICULAR RAMPS ARE 4' LONG UNLESS OTHERWISE NOTED
- LOCATE ALL NEW HANDHOLES OUTSIDE OF THE PAR.

(1) SALVAGE AND INSTALL SIGN.

(2) SHORTEN MEDIAN NOSE TO MAKE ROOM FOR NEW CROSSWALK. CONSTRUCT CONCRETE NOSE - SEE STANDARD PLATE 7113.

(3) CONSTRUCT CONCRETE PAVEMENT TO FILL THE AREA WHERE THE CONCRETE MEDIAN NOSE IS TO BE REMOVED. MATCH INPLACE PAVEMENT THICKNESS.

BY	DATE	REVISIONS

SYSTEM ID: XXXXX T.E. XXXX
METER ADDRESS: 9999 GRAND AVE.
OLD SYSTEM ID:

PEDESTRIAN CROSSWALK DETAILS
TRAFFIC CONTROL SIGNAL SYSTEM
T.H. 156 AT C.S.A.H. 14 (GRAND AVE.)
IN SOUTH ST. PAUL, DAKOTA COUNTY

S.A.P. NO. | DRAWN BY: | CKD BY: | DATE: 02-21-18

CERTIFIED BY _____ LICENSED PROFESSIONAL ENGINEER LIC. NO. _____ DATE: _____

STATE PROJ.NO. XXXX-XX (T.H.156) SHEET NO. 8 OF 20 SHEETS

DISTRICT #: Metro
IPLOT NAME: 008 ped curb ramp const (8)
PATH & FILENAME: OTST\Signals\SamplePlan\Sample Ped Curb Ramp Detail (2-21-18).dgn
PLOTTED/REVISED: 21-FEB-2018

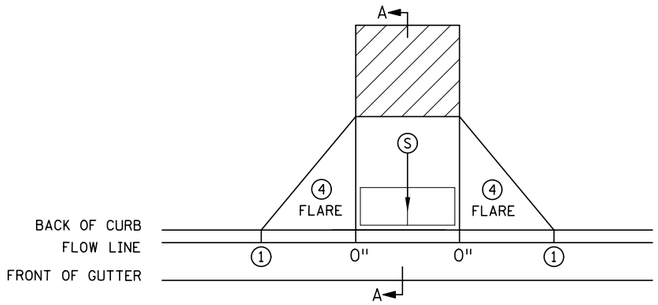

PERPENDICULAR

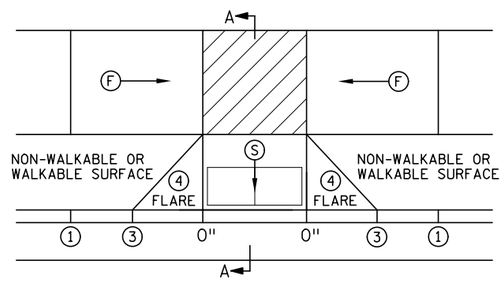

TIERED PERPENDICULAR

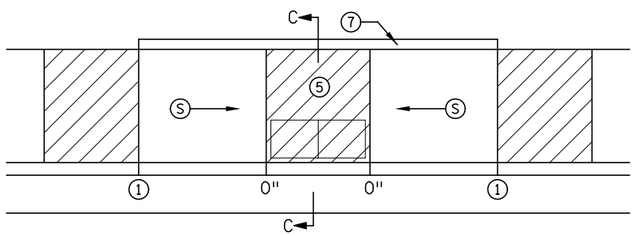

PARALLEL

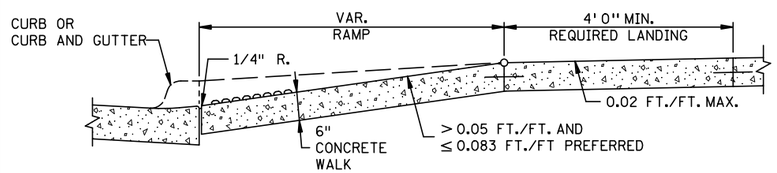

SECTION A-A

PERPENDICULAR/TIERED/DIAGONAL

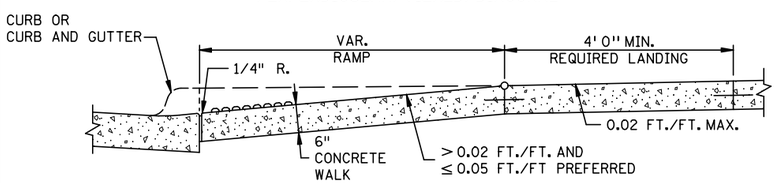

SECTION B-B

FAN

FAN 10

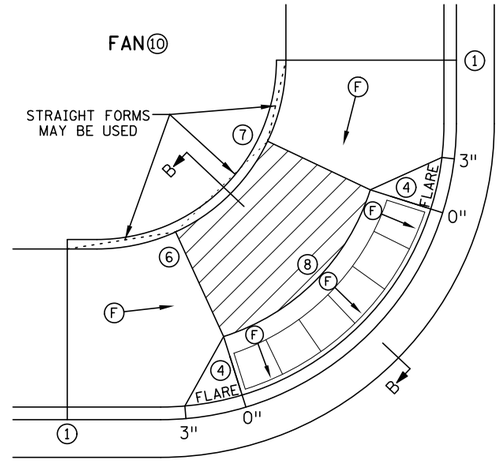

MODIFIED FAN 10

USED WHEN RIGHT-OF-WAY IS CONSTRAINED

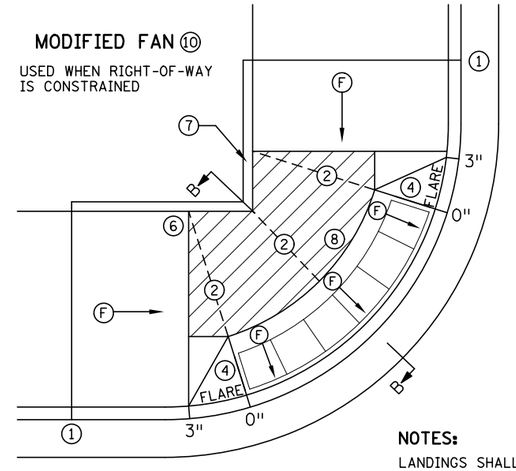

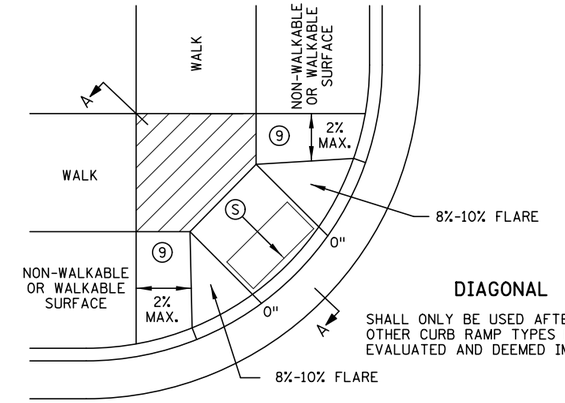

DIAGONAL

SHALL ONLY BE USED AFTER ALL OTHER CURB RAMP TYPES HAVE BEEN EVALUATED AND DEEMED IMPRACTICAL

DEPRESSED CORNER

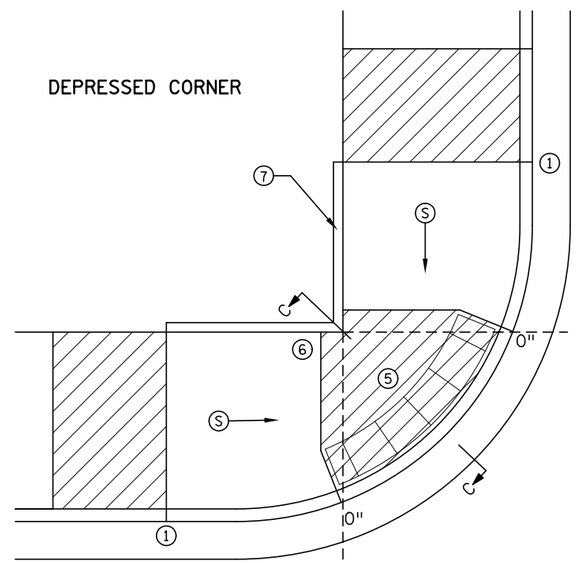

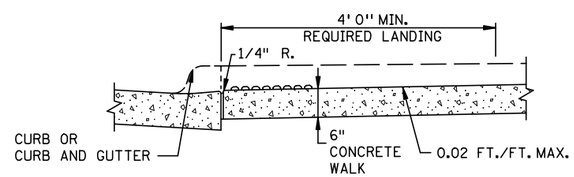

SECTION C-C

PARALLEL/DEPRESSED CORNER

NOTES:

LANDINGS SHALL BE LOCATED ANYWHERE THE PEDESTRIAN ACCESS ROUTE (PAR) CHANGES DIRECTION, AT THE TOP OF RAMPS THAT HAVE RUNNING SLOPES GREATER THAN 5.0%, AND IF THE APPROACHING WALK IS INVERSE GRADE GREATER THAN 2%.

INITIAL CURB RAMP LANDINGS SHALL BE CONSTRUCTED WITHIN 15' FROM THE BACK OF CURB, WITH 6' FROM THE BACK OF CURB BEING THE PREFERRED DISTANCE, ONLY APPLICABLE WHEN THE INITIAL RAMP RUNNING SLOPE IS OVER 5.0%.

SECONDARY CURB RAMP LANDINGS ARE REQUIRED FOR EVERY 30" OF VERTICAL RISE WHEN THE LONGITUDINAL RUNNING SLOPE IS GREATER THAN 5.0%.

CONTRACTION JOINTS SHALL BE CONSTRUCTED ALONG ALL GRADE BREAKS WITHIN THE PAR. 1/4" DEEP VISUAL JOINTS SHALL BE USED AT THE TOPS OF CONCRETE FLARES ADJACENT TO WALKABLE SURFACES.

ALL GRADE BREAKS WITHIN THE PAR SHALL BE PERPENDICULAR TO THE PATH OF TRAVEL. THUS BOTH SIDES OF A SLOPED WALKING SURFACE MUST BE EQUAL LENGTH. (EXCEPT AS STATED IN 6 BELOW.

TO ENSURE INITIAL RAMPS AND INITIAL LANDINGS ARE PROPERLY CONSTRUCTED, LANDINGS SHALL BE CAST SEPARATELY. FOLLOW SIDEWALK REINFORCEMENT DETAILS ON SHEET 6 AND THE ADA SPECIAL PROVISIONS - PROSECUTION OF WORK (ADA).

TOP OF CURB SHALL MATCH PROPOSED ADJACENT WALK GRADE.

WHEN THE BOULEVARD IS 4' WIDE OR LESS, THE TOP OF CURB TAPER SHALL MATCH THE RAMP SLOPES TO REDUCE NEGATIVE BOULEVARD SLOPES FROM THE TOP BACK OF CURB TO THE PAR.

ALL RAMP TYPES SHOULD HAVE A MINIMUM 3' LONG RAMP LENGTH.

4' MINIMUM WIDTH OF DETECTABLE WARNING IS REQUIRED FOR ALL RAMPS. DETECTABLE WARNINGS SHALL CONTINUOUSLY EXTEND FOR A MIN. OF 24" IN THE PATH OF TRAVEL. DETECTABLE WARNING TO COVER ENTIRE WIDTH OF SHARED-USE PATHS AND THE ENTIRE PAR WIDTH OF THE WALK. DETECTABLE WARNING SHOULD BE 6" LESS THAN THE PAR/TRAIL WIDTH. ARC LENGTH OF RADIAL DETECTABLE WARNINGS SHOULD NOT BE GREATER THAN 20 FEET.

RECTANGULAR DETECTABLE WARNINGS SHALL BE SETBACK 3" FROM THE BACK OF CURB. RADIAL DETECTABLE WARNINGS SHALL BE SETBACK 3" MINIMUM TO 6" MAXIMUM FROM THE BACK OF CURB.

1. MATCH FULL HEIGHT CURB.
2. 4' MINIMUM DEPTH LANDING REQUIRED ACROSS TOP OF RAMP.
3. 3" HIGH CURB WHEN USING A 3' LONG RAMP, 4" HIGH CURB WHEN USING A 4' LONG RAMP.
4. SEE SHEET 4 OF 6, TYPICAL SIDE TREATMENT OPTIONS, FOR DETAILS ON FLARES AND RETURNED CURBS, WHEN INITIAL LANDING IS AT FULL CURB HEIGHT.
5. DETECTABLE WARNINGS MAY BE PART OF THE 4' X 4' MIN. LANDING AREA IF IT IS NOT FEASIBLE TO CONSTRUCT THE LANDING OUTSIDE OF THE DETECTABLE WARNING AREA.
6. THE GRADE BREAK SHALL BE PERPENDICULAR TO THE BACK OF WALK. THIS WILL ENSURE THAT THE GRADE BREAK IS PERPENDICULAR TO THE DIRECTION OF TRAVEL. (TYPICAL FOR ALL)
7. WHEN ADJACENT TO GRASS, GRADING SHALL ALWAYS BE USED WHEN FEASIBLE. V CURB, IF USED, SHALL BE PLACED OUTSIDE THE SIDEWALK LIMITS WHEN RIGHT OF WAY ALLOWS. WHEN ADJACENT TO PARKING LOTS, CONCRETE OR BITUMINOUS TAPERS SHOULD BE USED OVER V CURB TO REDUCE TRIPPING HAZARDS AND FACILITATE SNOW & ICE REMOVAL.
8. A 7' MIN TOP RADIUS GRADE BREAK REQUIRED TO BE CONSTRUCTIBLE.
9. PAVE FULL WALK WIDTH.
10. "S" SLOPES ON FANS SHALL ONLY BE USED WHEN ALL OTHER FEASIBLE OPTIONS HAVE BEEN EVALUATED AND DEEMED IMPRACTICAL.

LEGEND

THESE LONGITUDINAL SLOPE RANGES SHALL BE THE STARTING POINT. IF SITE CONDITIONS WARRANT, LONGITUDINAL SLOPES UP TO 8.3% OR FLATTER ARE ALLOWED.

- S — INDICATES PEDESTRIAN RAMP - SLOPE SHALL BE BETWEEN 5.0% MINIMUM AND 8.3% MAXIMUM IN THE DIRECTION SHOWN AND THE CROSS SLOPE SHALL NOT EXCEED 2.0%.
- F — INDICATES PEDESTRIAN RAMP - SLOPE SHALL BE GREATER THAN 2.0% AND LESS THAN 5.0% IN THE DIRECTION SHOWN AND CROSS SLOPE SHALL NOT EXCEED 2.0%.
- LANDING AREA - 4' X 4' MIN. (5' X 5' MIN. PREFERRED) DIMENSIONS AND MAX 2.0% SLOPE IN ALL DIRECTIONS. LANDING SHALL BE FULL WIDTH OF INCOMING PARS.
- X" — CURB HEIGHT

REVISION:

APPROVED: JANUARY 23, 2017

OPERATIONS ENGINEER

MINNESOTA DEPARTMENT OF TRANSPORTATION

STATE DESIGN ENGINEER

REVISED:

APPROVED:

1-23-2017

PEDESTRIAN CURB RAMP DETAILS

STANDARD PLAN 5-297.250 | 1 OF 6

STATE PROJ.NO. XXXX-XX (T.H.156) SHEET NO. 9 OF 20 SHEETS

PLOTTED/REVISED: 21-FEB-2018
DISTRICT #: Metro
IPLOT NAME: 009 ped curb ramp details 1(9)
PATH & FILENAME: OTST\Signals\SamplePlan\Sample Plan (2-21-18).dgn

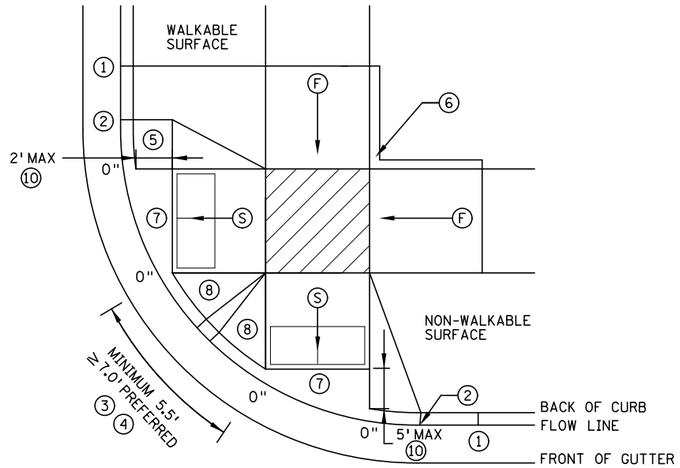

COMBINED DIRECTIONAL ⑨

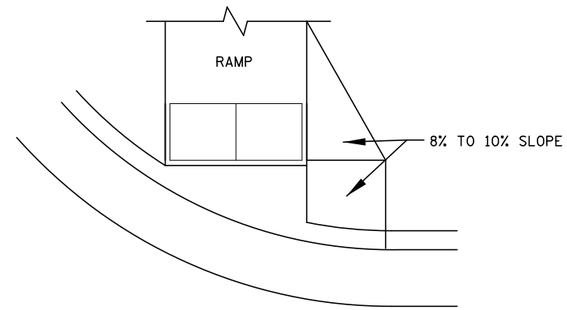

DIRECTIONAL RAMP WALKABLE FLARE

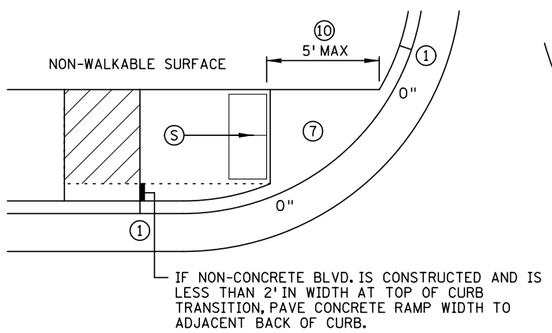

STANDARD ONE-WAY DIRECTIONAL ⑨

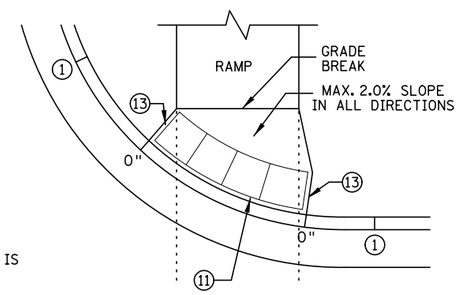

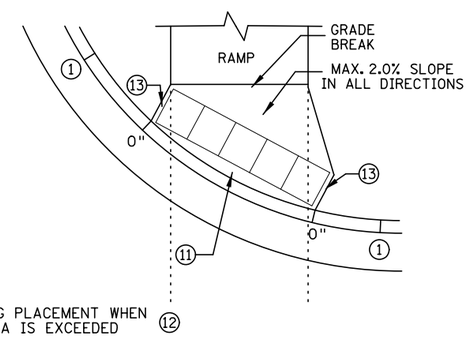

ONE-WAY DIRECTIONAL WITH DETECTABLE WARNING AT BACK OF CURB

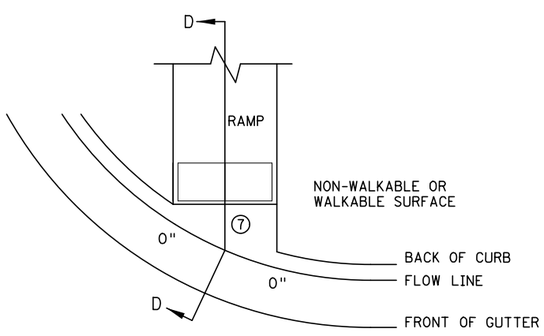

CURB FOR DIRECTIONAL RAMPS ⑭

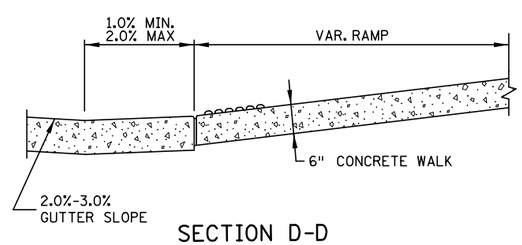

SECTION D-D

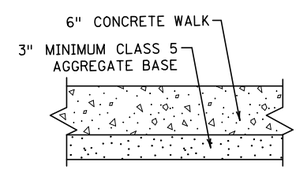

TYPICAL SIDEWALK SECTION WITHIN INTERSECTION CORNER

NOTES:

LANDINGS SHALL BE LOCATED ANYWHERE THE PEDESTRIAN ACCESS ROUTE (PAR) CHANGES DIRECTION, AT THE TOP OF RAMPS THAT HAVE RUNNING SLOPES GREATER THAN 5.0%, AND IF THE APPROACHING WALK IS INVERSE GRADE.

INITIAL CURB RAMP LANDINGS SHALL BE CONSTRUCTED WITHIN 15' FROM THE BACK OF CURB, WITH 6' FROM THE BACK OF CURB BEING THE PREFERRED DISTANCE, ONLY APPLICABLE WHEN THE INITIAL RAMP RUNNING SLOPE IS OVER 5.0%.

SECONDARY CURB RAMP LANDINGS ARE REQUIRED FOR EVERY 30" OF VERTICAL RISE WHEN THE LONGITUDINAL SLOPE IS GREATER THAN 5.0%.

CONTRACTION JOINTS SHALL BE CONSTRUCTED ALONG ALL GRADE BREAKS WITHIN THE PAR. 1/4" DEEP VISUAL JOINTS SHALL BE USED AT THE TOP GRADE BREAK OF CONCRETE FLARES ADJACENT TO WALKABLE SURFACES.

ALL GRADE BREAKS WITHIN THE PAR SHALL BE PERPENDICULAR TO THE PATH OF TRAVEL. THUS BOTH SIDES OF A SLOPED WALKING SURFACE MUST BE EQUAL LENGTH.

TO ENSURE INITIAL RAMPS AND INITIAL LANDINGS ARE PROPERLY CONSTRUCTED, LANDINGS SHALL BE CAST SEPARATELY. FOLLOW SIDEWALK REINFORCEMENT DETAILS ON SHEET 6 AND THE ADA SPECIAL PROVISION (PROSECUTION OF WORK).

TOP OF CURB SHALL MATCH PROPOSED ADJACENT WALK GRADE.

WHEN THE BOULEVARD IS 4' WIDE OR LESS, THE TOP OF CURB TAPER SHALL MATCH THE RAMP SLOPES TO REDUCE NEGATIVE BOULEVARD SLOPES FROM THE TOP BACK OF CURB TO THE PAR.

ALL RAMP TYPES SHOULD HAVE A MINIMUM 3' LONG RAMP LENGTH.

4' MINIMUM WIDTH OF DETECTABLE WARNING IS REQUIRED FOR ALL RAMPS. DETECTABLE WARNINGS SHALL CONTINUOUSLY EXTEND FOR A MIN. OF 24" IN THE PATH OF TRAVEL. DETECTABLE WARNING TO COVER ENTIRE WIDTH OF SHARED-USE PATH AND THE ENTIRE PAR WIDTH OF THE WALK. DETECTABLE WARNING SHOULD BE 6" LESS THAN THE PAR/PATH WIDTH. ARC LENGTH OF RADIAL DETECTABLE WARNINGS SHOULD NOT BE GREATER THAN 20 FEET.

RADIAL DETECTABLE WARNINGS SHALL BE SETBACK 3" MINIMUM TO 6" MAXIMUM FROM THE BACK OF CURB. SEE NOTES ⑩ & ⑪ FOR INFORMATION REGARDING RECTANGULAR DETECTABLE WARNING PLACEMENT.

① MATCH FULL CURB HEIGHT.

② 3" HIGH CURB WHEN USING A 3' LONG RAMP
4" HIGH CURB WHEN USING A 4' LONG RAMP.

③ 3" MINIMUM CURB HEIGHT (5.5' MIN. DISTANCE REQUIRED BETWEEN DOMES)
4" PREFERRED (7' MIN. DISTANCE REQUIRED BETWEEN DOMES).

④ THE "BUMP" IN BETWEEN THE RAMPS SHOULD NOT BE IN THE PATH OF TRAVEL FOR COMBINED DIRECTIONAL RAMPS. IF THIS OCCURS MODIFY THE RAMP LOCATION OR SWITCH RAMP TO A FAN/DEPRESSED CORNER.

⑤ WHEN USING CONCRETE PAVED FLARES ON THE OUTSIDE OF DIRECTIONAL RAMPS, AND ADJACENT TO A WALKABLE SURFACE, DIRECTIONAL RAMP FLARES SHOULD BE USED. SEE THE DETAIL ON THIS SHEET.

⑥ GRADING SHALL ALWAYS BE USED WHEN FEASIBLE. V CURB, IF USED, SHALL BE PLACED OUTSIDE THE SIDEWALK LIMITS WHEN RIGHT OF WAY ALLOWS. WHEN ADJACENT TO PARKING LOTS, CONCRETE OR BITUMINOUS TAPERS SHOULD BE USED OVER V CURB TO REDUCE TRIPPING HAZARDS AND FACILITATE SNOW & ICE REMOVAL.

⑦ MAX. 2.0% SLOPE IN ALL DIRECTIONS IN FRONT OF GRADE BREAK AND DRAIN TO FLOW LINE. SHALL BE CONSTRUCTED INTEGRAL WITH CURB AND GUTTER.

⑧ 8% TO 10% WALKABLE FLARE.

⑨ PLACE DOMES AT THE BACK OF CURB WHEN ALLOWABLE SETBACK CRITERIA IS EXCEEDED.

⑩ FRONT EDGE OF DETECTABLE WARNING SHALL BE SET BACK 2' MAXIMUM WHEN ADJACENT TO WALKABLE SURFACE, AND 5' MAXIMUM WHEN ADJACENT TO NON-WALKABLE SURFACE WITH ONE CORNER SET 3" FROM BACK OF CURB. A WALKABLE SURFACE IS DEFINED AS A PAVED SURFACE ADJACENT TO A CURB RAMP WITHOUT RAISED OBSTACLES THAT COULD MISTAKENLY BE TRAVERSED BY A USER WHO IS VISUALLY IMPAIRED.

⑪ RECTANGULAR DETECTABLE WARNINGS MAY BE SETBACK UP TO 9" FROM THE BACK OF CURB WITH CORNERS SET 3" FROM BACK OF CURB. IF 9" SETBACK IS EXCEEDED USE RADIAL DETECTABLE WARNINGS.

⑫ FOR DIRECTIONAL RAMPS WITH THE DETECTABLE WARNINGS PLACED AT THE BACK OF CURB, THE DETECTABLE WARNINGS SHALL COVER THE ENTIRE WIDTH OF THE WALK/PATH. THIS ENSURES A DETECTABLE EDGE AND HELPS ELIMINATE THE CURB TAPER OBSTRUCTING THE PATH OF PEDESTRIAN TRAVEL.

⑬ THE CONCRETE WALK SHALL BE FORMED AND CONSTRUCTED PERPENDICULAR TO THE BACK OF CURB. MAINTAIN 3" BETWEEN EDGE OF DOMES AND EDGE OF CONCRETE.

⑭ TO BE USED FOR ALL DIRECTIONAL RAMPS, EXCEPT WHERE DOMES ARE PLACED ALONG THE BACK OF CURB.

LEGEND

THESE LONGITUDINAL SLOPE RANGES SHALL BE THE STARTING POINT. IF SITE CONDITIONS WARRANT, LONGITUDINAL SLOPES UP TO 8.3% OR FLATTER ARE ALLOWED.

Ⓢ INDICATES PEDESTRIAN RAMP - SLOPE SHALL BE BETWEEN 5.0% MINIMUM AND 8.3% MAXIMUM IN THE DIRECTION SHOWN AND THE CROSS SLOPE SHALL NOT EXCEED 2.0%.

Ⓕ INDICATES PEDESTRIAN RAMP - SLOPE SHALL BE GREATER THAN 2.0% AND LESS THAN 5.0% IN THE DIRECTION SHOWN AND CROSS SLOPE SHALL NOT EXCEED 2.0%.

LANDING AREA - 4' X 4' MIN. (5' X 5' MIN. PREFERRED) DIMENSIONS AND MAX 2.0% SLOPE IN ALL DIRECTIONS. LANDING SHALL BE FULL WIDTH OF INCOMING PARS.

X" CURB HEIGHT

REVISION:

APPROVED: JANUARY 23, 2017
OPERATIONS ENGINEER

MINNESOTA DEPARTMENT OF TRANSPORTATION

STATE DESIGN ENGINEER

REVISED:

APPROVED:
1-23-2017

PEDESTRIAN CURB RAMP DETAILS

STANDARD PLAN 5-297.250 | 2 OF 6

STATE PROJ.NO. XXXX-XX (T.H.156) SHEET NO. 10 OF 20 SHEETS

PLOTTED/REVISED: 21-FEB-2018
DISTRICT #: Metro
IPLOT NAME: OIO ped curb ramp details 2 (10)
PATH & FILENAME: OTST\Signals\SamplePlan\Sample Plan (12-21-18).dgn

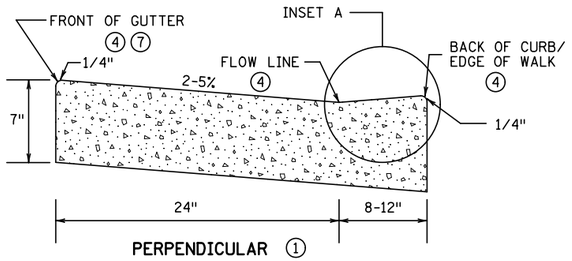

PERPENDICULAR ①

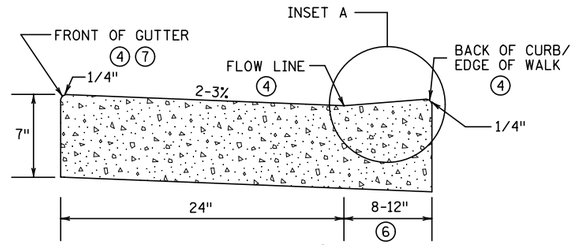

NON PERPENDICULAR ②

PEDESTRIAN ACCESS ROUTE CURB & GUTTER DETAIL

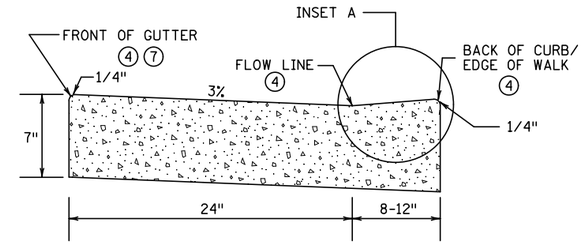

FOR CURB MACHINE PLACEMENT AROUND RADIUS ③
(REGARDLESS OF RAMP TYPE)

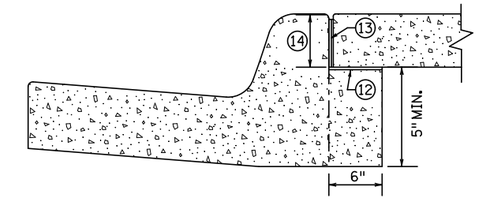

OPTIONAL SILL CURB WHEN SIDEWALK IS AT BACK OF CURB

CONCRETE SILL TO BE USED ONLY WHEN SPECIFIED IN THE PLAN.

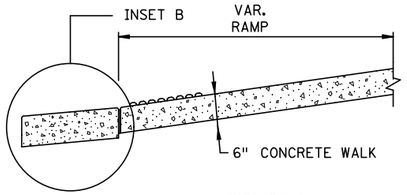

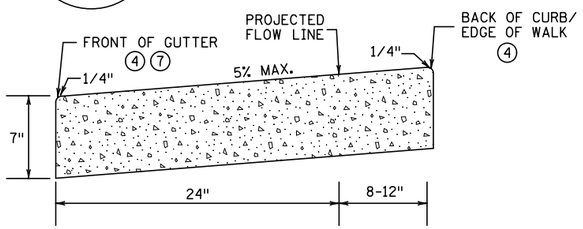

INSET B

OUTFLOW GUTTER ⑧

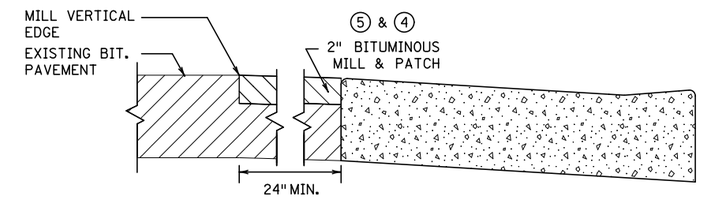

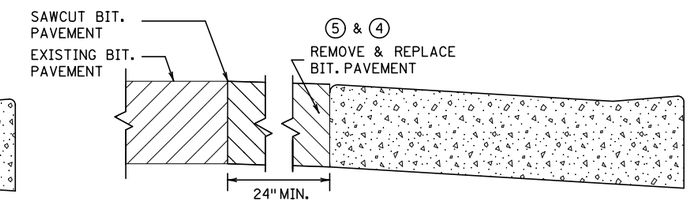

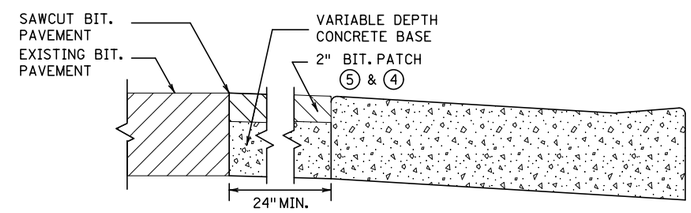

ONLY ALLOWED PER ENGINEER'S APPROVAL

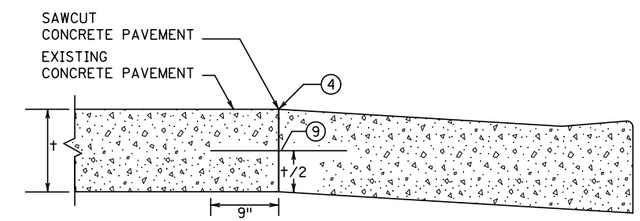

PAVEMENT TREATMENT OPTIONS IN FRONT OF CURB & GUTTER

FOR USE ON CURB RAMP RETROFITS

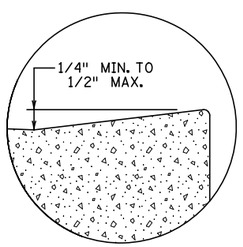

INSET A

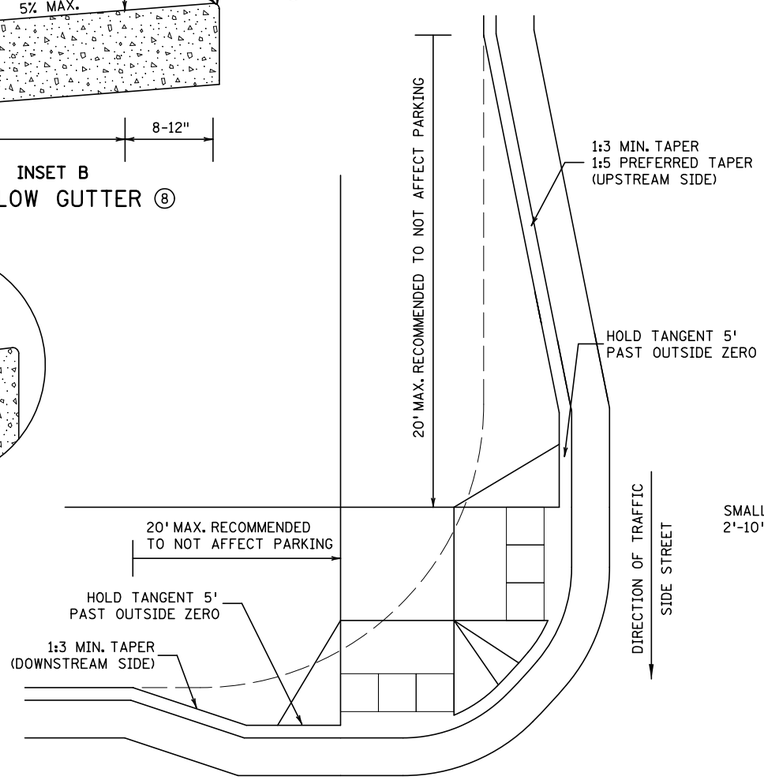

ADA CURB EXTENSION WITH COMPOUND RADIUS (BUMP OUT) ⑪

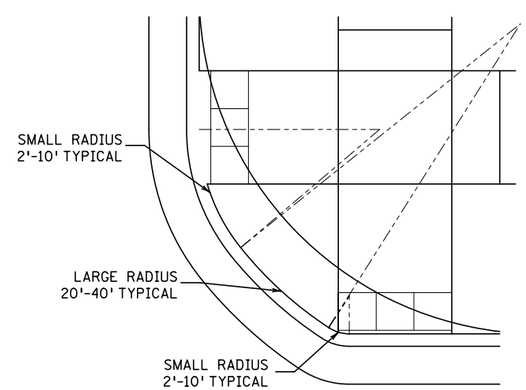

COMBINED DIRECTIONAL ⑩
(COMPOUND RADIUS)

NOTES:

POSITIVE FLOW LINE DRAINAGE SHALL BE MAINTAINED THROUGH THE PEDESTRIAN ACCESS ROUTE (PAR) AT A 2% MAXIMUM. PONDING SHALL BE PRESENT IN THE PAR.

ANY VERTICAL LIP THAT OCCURS AT THE FLOW LINE SHALL NOT BE GREATER THAN 1/4 INCH.

① FOR USE AT CURB CUTS WHERE THE PEDESTRIAN'S PATH OF TRAVEL IS ASSUMED PERPENDICULAR TO THE GUTTER LOW LINE. RAMP TYPES INCLUDE: PERPENDICULAR, TIERED PERPENDICULAR, PARALLEL, AND DIAGONAL RAMPS.

② FOR USE AT CURB RAMPS WHERE THE PEDESTRIAN'S PATH OF TRAVEL IS ASSUMED NON PERPENDICULAR TO THE GUTTER FLOW LINE. RAMP TYPES INCLUDE: FANS & DEPRESSED CORNERS.

③ BEGIN GUTTER SLOPE TRANSITION 10' OUTSIDE OF ALL CURB RAMPS.

④ THERE SHALL BE NO VERTICAL DISCONTINUITIES GREATER THAN 1/4".

⑤ ELEVATION CHANGE TAKES PLACE FROM THE EXISTING TO NEW FRONT OF GUTTER. PATCH IS USED TO MATCH THE NEW GUTTER FACE INTO THE EXISTING ROADWAY.

⑥ VARIABLE WIDTH FOR DIRECTIONAL CURB APPLICATIONS. SEE SHEET 2 FOR DIRECTIONAL CURB SLOPE REQUIREMENTS.

⑦ TOP FRONT OF GUTTER SHALL BE CONSTRUCTED FLUSH WITH PROPOSED ADJACENT PAVEMENT ELEVATION. TOP 1.5" OF THE GUTTER FACE MUST BE A FORMED EDGE. PAR GUTTER SHALL NOT BE OVERLAID.

⑧ SHOULD BE USED AT VERTICALLY CONSTRAINED AREAS WHEN AT A DRAINAGE HIGH POINT OR SUPER ELEVATED ROADWAY SEGMENTS.

⑨ DRILL AND GROUT NO. 4 EPOXY-COATED 18" LONG TIE BARS AT 30" CENTER TO CENTER INTO EXISTING CONCRETE PAVEMENT 1' MINIMUM FROM ALL JOINTS.

⑩ HELPS PROVIDE TWO SEPARATE RAMPS, REDUCES THE DOME SETBACK LENGTH AND MINIMIZES DIRECTIONAL CURB. THIS RADIUS DESIGN CLOSELY FOLLOWS THE TURNING VEHICLE PATH WHILE OPTIMIZING CURB RAMP LENGTH.

⑪ CURB EXTENSIONS SHOULD BE USED IN VERTICALLY CONSTRAINED AREAS, USUALLY IN DOWNTOWN ROADWAY SEGMENTS WHERE ON-STREET PARKING IS AVAILABLE. CURB EXTENSIONS SHOULD BE CONSIDERED FOR APS INTERSECTIONS WHERE SPACE IS LIMITED. PUSH BUTTONS MUST MEET APS CRITERIA AS DESCRIBED IN THE PUSH BUTTON LOCATION DETAIL SHEET.

⑫ PLACE BOND BREAKER BETWEEN WALK AND TOP OF SILL.

⑬ 1/2" PREFORMED JOINT FILLER PER MNDOT SPEC. 3702.

⑭ DIMENSION TO BE SAME AS SIDEWALK THICKNESS, 4" MIN.

REVISION:		REVISED:	PEDESTRIAN CURB RAMP DETAILS	
APPROVED: JANUARY 23, 2017 OPERATIONS ENGINEER	MINNESOTA DEPARTMENT OF TRANSPORTATION — STATE DESIGN ENGINEER	APPROVED: 1-23-2017	STANDARD PLAN 5-297.250	3 OF 6

STATE PROJ.NO. XXXX-XX (T.H.156) SHEET NO. 11 OF 20 SHEETS

PLOTTED/REVISED: 21-FEB-2018
DISTRICT #: Metro
IPLOT NAME: Oil ped curb ramp details 3 (II)
PATH & FILENAME: OTST\Signals\SamplePlan\Sample Plan (2-21-18).dgn

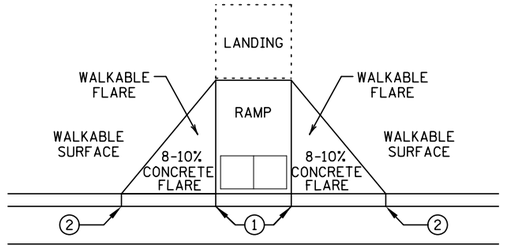

PAVED FLARES
ADJACENT TO WALKABLE SURFACE

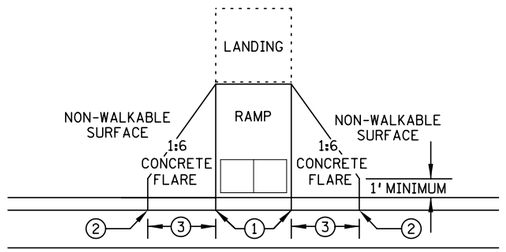

PAVED FLARES
ADJACENT TO NON-WALKABLE SURFACE

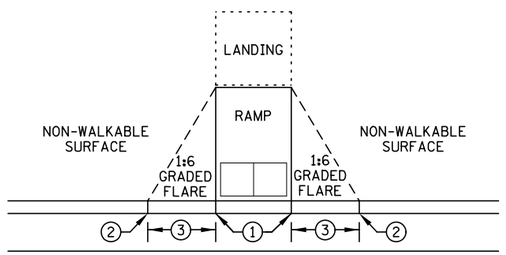

GRADED FLARES

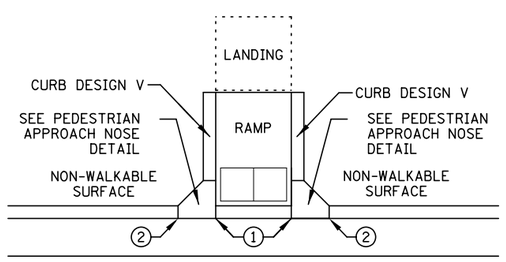

RETURNED CURB ⑤

TYPICAL SIDE TREATMENT OPTIONS ④ ⑪

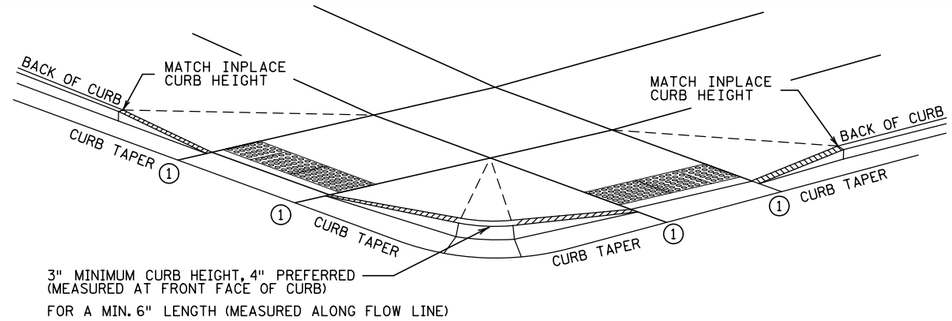

DETECTABLE EDGE WITH ⑧
CURB AND GUTTER

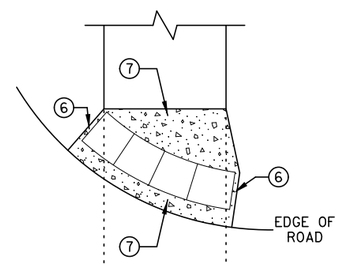

RADIAL DETECTABLE WARNING

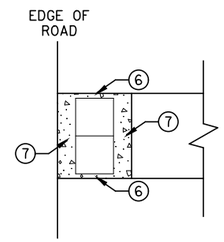

RECTANGULAR DETECTABLE WARNING

DETECTABLE EDGE WITHOUT CURB AND GUTTER

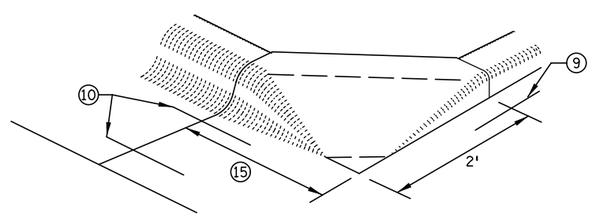

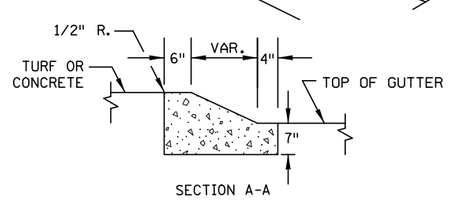

SECTION A-A

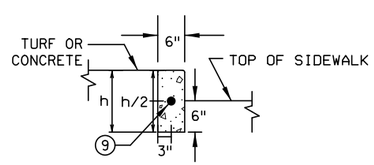

SECTION B-B

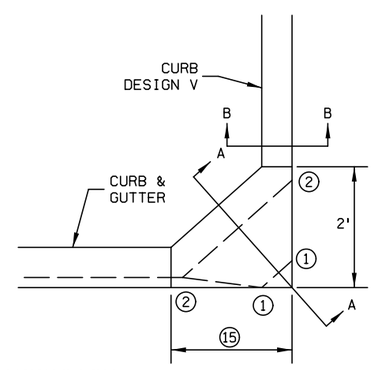

PEDESTRIAN APPROACH
NOSE DETAIL
(FOR RETURNED CURB
SIDE TREATMENT)

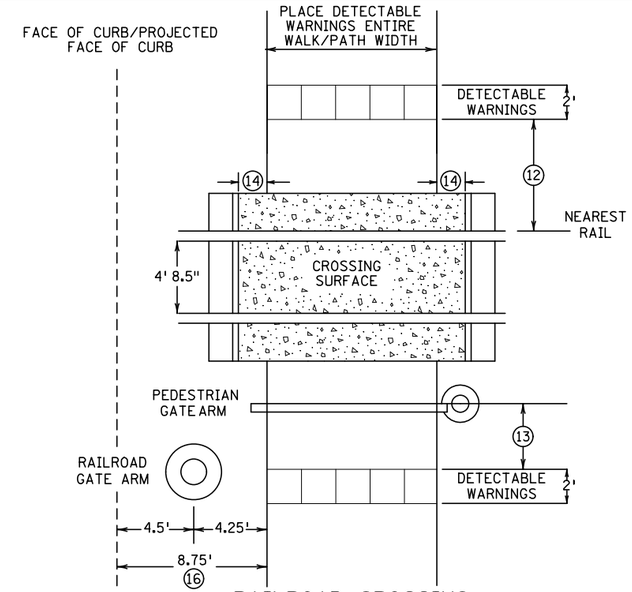

RAILROAD CROSSING
PLAN VIEW

NOTES:

SEE STANDARD PLATE 7038 AND THIS SHEET FOR ADDITIONAL DETAILS ON DETECTABLE WARNING.

A WALKABLE SURFACE IS DEFINED AS A PAVED SURFACE ADJACENT TO A CURB RAMP WITHOUT RAISED OBSTACLES THAT COULD MISTAKENLY BE TRAVERSED BY A USER WHO IS VISUALLY IMPAIRED.

CONCRETE FLARE LENGTHS ADJACENT TO NON-WALKABLE SURFACES SHOULD BE LESS THAN 8' LONG MEASURED ALONG THE RAMPS FROM THE BACK OF CURB.

① 0" CURB HEIGHT.

② FULL CURB HEIGHT.

③ 2' FOR 4" HIGH CURB AND 3' FOR 6" HIGH CURB.

④ SIDE TREATMENTS ARE APPLICABLE TO ALL RAMP TYPES AND SHOULD BE IMPLEMENTED AS NEEDED AS FIELD CONDITIONS DICTATE. THE ENGINEER SHALL DETERMINE THE RAMP SIDE TREATMENTS BASED ON MAINTENANCE OF BOTH ROADWAY AND SIDEWALK, ADJACENT PROPERTY CONSIDERATIONS, AND MITIGATING CONSTRUCTION IMPACTS.

⑤ TYPICALLY USED FOR MEDIANS AND ISLANDS.

⑥ WHEN NO CONCRETE FLARES ARE PROPOSED, THE CONCRETE WALK SHALL BE FORMED AND CONSTRUCTED PERPENDICULAR TO THE EDGE OF ROADWAY. MAINTAIN 3" MAX. BETWEEN EDGE OF DOMES AND EDGE OF CONCRETE.

⑦ IF NO CURB AND GUTTER IS PLACED IN RURAL SECTIONS, DETECTABLE WARNINGS SHALL BE PLACED 1' FROM THE EDGE OF BITUMINOUS ROADWAY AND/OR BITUMINOUS SHARED-USE PATH TO PROVIDE VISUAL CONTRAST.

⑧ ALL CONSTRUCTED CURBS MUST HAVE A CONTINUOUS DETECTABLE EDGE FOR THE VISUALLY IMPAIRED. THIS DETECTABLE EDGE REQUIRES DETECTABLE WARNINGS WHEREVER THERE IS ZERO-INCH HIGH CURB. CURB TAPERS ARE CONSIDERED A DETECTABLE EDGE WHEN THE TAPER STARTS WITHIN 3" OF THE EDGE OF THE DETECTABLE WARNINGS AND UNIFORMLY RISES TO A 3-INCH MINIMUM CURB HEIGHT. ANY CURB NOT PART OF A CURB TAPER AND LESS THAN 3 INCHES IN HEIGHT IS NOT CONSIDERED A DETECTABLE EDGE AND THEREFORE IS NOT COMPLIANT WITH ACCESSIBILITY STANDARDS.

⑨ DRILL AND GROUT 1 - NO. 4 12" LONG REINFORCEMENT BAR (EPOXY COATED) WITH 3" MIN. COVER. REINFORCEMENT BARS ARE NOT NEEDED IF THE APPROACH NOSE IS POURED INTEGRAL WITH THE V CURB.

⑩ DRILL AND GROUT 2 - NO. 4 12" LONG REINFORCEMENT BARS (EPOXY COATED) WITH 3" MIN. COVER. REINFORCEMENT BARS ARE NOT NEEDED IF THE APPROACH NOSE IS POURED INTEGRAL WITH THE CURB AND GUTTER.

⑪ SIDE TREATMENT EXAMPLES SHOWN ARE WHEN THE INITIAL LANDING IS APPROXIMATELY LEVEL WITH THE FULL HEIGHT CURB (I.E. 6' LONG RAMP FOR 6" HIGH CURB). WHEN THE INITIAL LANDING IS MORE THAN 1" BELOW FULL HEIGHT CURB REFER TO SHEETS 1 & 2 TO MODIFY THE CURB HEIGHT TAPERS AND MAINTAIN POSITIVE BOULEVARD DRAINAGE.

⑫ NEAREST EDGE OF DETECTABLE WARNING SURFACES SHALL BE PLACED 12' MINIMUM TO 15' MAXIMUM FROM THE NEAREST RAIL. FOR SKEWED RAILWAYS IN NO INSTANCE SHALL THE DETECTABLE WARNING BE CLOSER THAN 12' MEASURED PERPENDICULAR TO THE NEAREST RAIL.

⑬ WHEN PEDESTRIAN GATES ARE PROVIDED, DETECTABLE WARNING SURFACES SHALL BE PLACED ON THE SIDE OF THE GATES OPPOSITE THE RAIL, 2' FROM THE APPROACHING SIDE OF THE GATE ARM. THIS CRITERIA GOVERNS OVER NOTE ⑫.

⑭ CROSSING SURFACE SHALL EXTEND 2' MINIMUM PAST THE OUTSIDE EDGE OF WALK OR SHARED-USE PATH.

⑮ 3' FOR MEDIANS AND SPLITTER ISLANDS. NOSE CAN BE REDUCED TO 2' ON FREE RIGHT ISLANDS.

⑯ SIDEWALK TO BE PLACED 8.75' MIN. FROM THE FACE OF CURB/PROJECTED FACE OF CURB. THIS ENSURES MIN. CLEARANCE BETWEEN THE SIDEWALK AND GATE ARM COUNTERWEIGHT SUPPORTS.

PLOTTED/REVISED: 21-FEB-2018
DISTRICT #: Metro
IPLOT NAME: 012 ped curb ramp details 4 (12)
PATH & FILENAME: OTST\Signals\SamplePlan\Sample Plan (2-21-18).dgn

REVISION:		REVISED:	PEDESTRIAN CURB RAMP DETAILS		
APPROVED: JANUARY 23, 2017 OPERATIONS ENGINEER	STATE DESIGN ENGINEER	APPROVED: 1-23-2017	STANDARD PLAN 5-297.250	4 OF 6	STATE PROJ.NO. XXXX-XX (T.H.156) SHEET NO. 12 OF 20 SHEETS

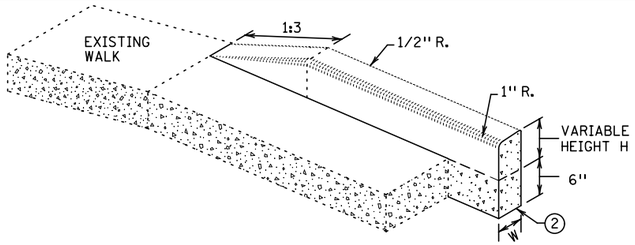

V CURB ADJACENT TO LANDSCAPE
CURB WITHIN SIDEWALK LIMITS

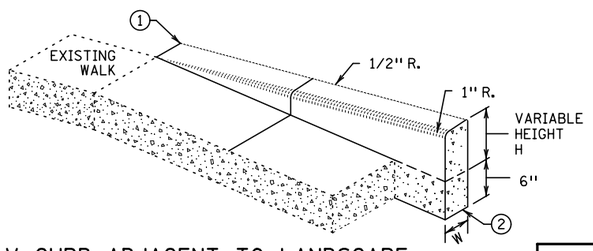

V CURB ADJACENT TO LANDSCAPE
CURB OUTSIDE SIDEWALK LIMITS

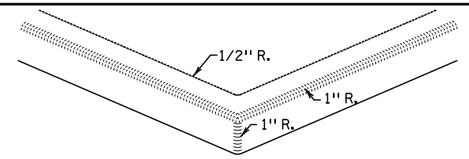

V CURB INTERSECTION

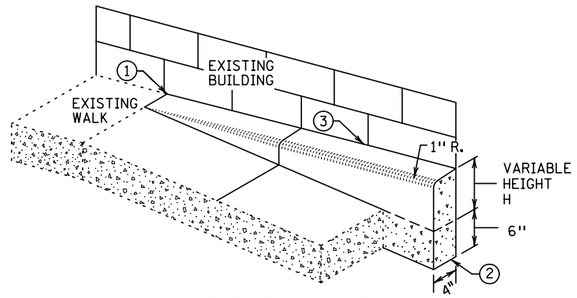

V CURB ADJACENT TO BUILDING
OR BARRIER

CONCRETE CURB DESIGN V	
CURB HEIGHT H	CURB WIDTH W
<6"	4"
≥6"	6"

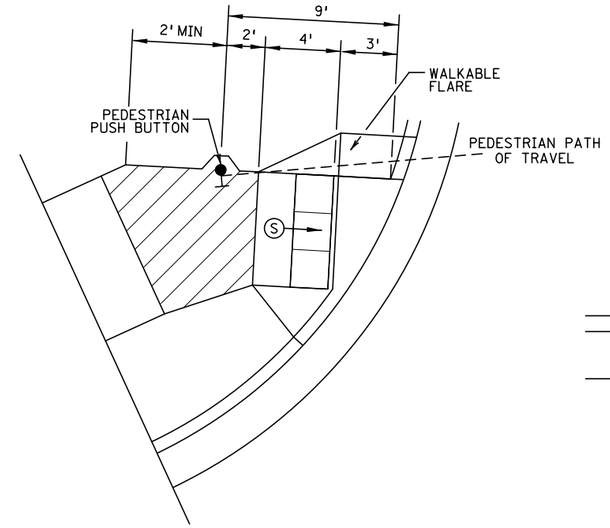

SEMI-DIRECTIONAL RAMP (3,4,9)

3' DOME SETBACK, 4' LONG RAMP AND PUSH BUTTON 9' FROM THE BACK OF CURB

PRIMARILY USED FOR APS APPLICATIONS WHERE THE PAR DOES NOT CONTINUE PAST THE PUSH BUTTON (DEAD-END SIDEWALK)

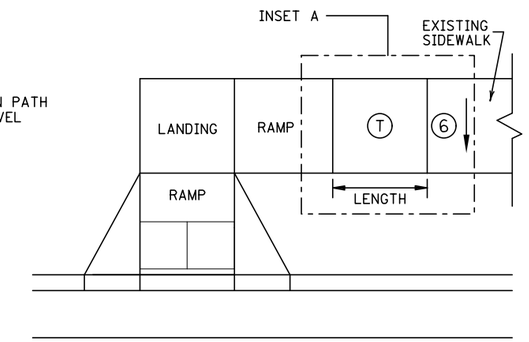

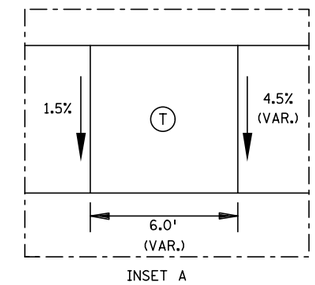

TRANSITION PANEL 4 5

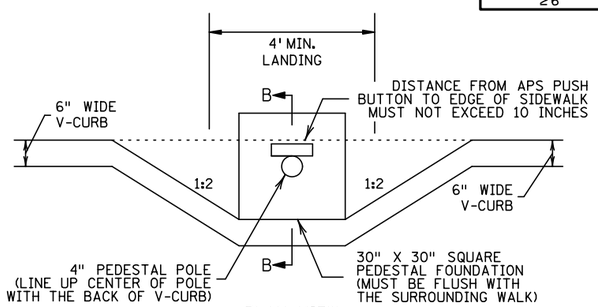

PLAN VIEW

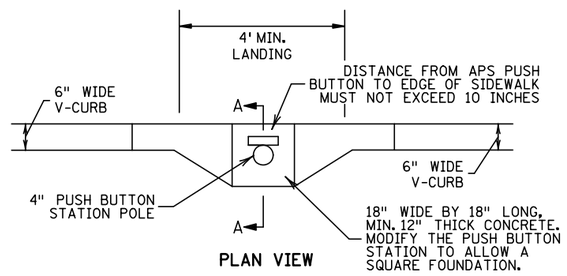

PLAN VIEW

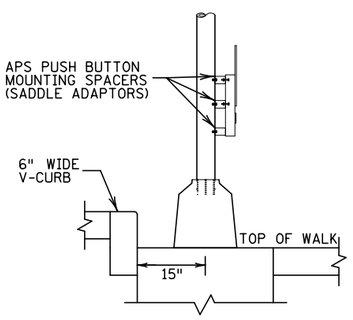

SECTION B-B

SIGNAL PEDESTAL & PUSH BUTTON (V-CURB)

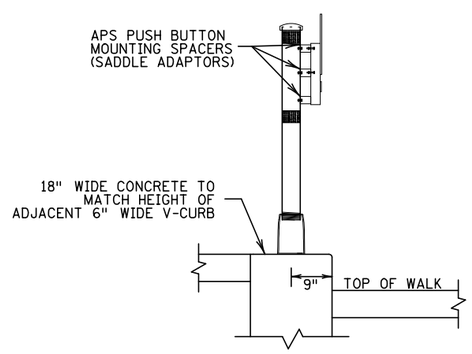

SECTION A-A

PUSH BUTTON STATION (V-CURB)

NOTES:

A WALKABLE FLARE IS AN 8-10% CONCRETE FLARE THAT IS REQUIRED WHEN THE FLARE IS ADJACENT TO A WALKABLE SURFACE, OR WHEN THE PEDESTRIAN PATH OF TRAVEL OF A PUSH BUTTON TRAVERSES THE FLARE.

ALL V CURB CONTRACTION JOINTS SHALL MATCH CONCRETE WALK JOINTS.

WHERE RIGHT-OF-WAY ALLOWS, USE OF V CURB SHOULD BE MINIMIZED. GRADING ADJACENT TURF OR SLOPING ADJACENT PAVEMENT IS PREFERRED.

V CURB SHALL BE PLACED OUTSIDE THE SIDEWALK LIMITS WHEN RIGHT OF WAY ALLOWS.

V CURB NEXT TO BUILDING SHALL BE A 4" WIDTH AND SHALL MATCH PREVIOUS TOP OF SIDEWALK ELEVATIONS.

1. END TAPERS AT TRANSITION SECTION SHALL MATCH INPLACE SIDEWALK GRADES.
2. ALL V CURB SHALL MATCH BOTTOM OF ADJACENT WALK.
3. EDGE BETWEEN NEW V CURB AND INPLACE STRUCTURE SHALL BE SEALED AND BOND BREAKER SHALL BE USED BETWEEN EXISTING STRUCTURE AND PLACED V-CURB.
4. THE MAX. RATE OF CROSS SLOPE TRANSITIONING IS 1' LINEAR FOOT OF SIDEWALK PER HALF PERCENT CROSS SLOPE. WHEN PAR WIDTH IS GREATER THAN 6' OR THE RUNNING SLOPE IS GREATER THAN 5%, DOUBLE THE CALCULATED TRANSITION LENGTH.
5. TRANSITION PANELS ARE TO ONLY BE USED AFTER THE RAMP, OR IF NEEDED, LANDING ARE AT THE FULL CURB HEIGHT (TYPICAL SECTION).
6. EXISTING CROSS SLOPE GREATER THAN 2.0%.

LEGEND

THESE LONGITUDINAL SLOPE RANGES SHALL BE THE STARTING POINT. IF SITE CONDITIONS WARRANT, LONGITUDINAL SLOPES UP TO 8.3% OR FLATTER ARE ALLOWED.

S — INDICATES PEDESTRIAN RAMP - SLOPE SHALL BE BETWEEN 5.0% MINIMUM AND 8.3% MAXIMUM IN THE DIRECTION SHOWN AND THE CROSS SLOPE SHALL NOT EXCEED 2.0%.

LANDING AREA - 4' X 4' MIN. (5' X 5' MIN. PREFERRED) DIMENSIONS AND MAX 2.0% SLOPE IN ALL DIRECTIONS. LANDING SHALL BE FULL WIDTH OF INCOMING PARS.

T — TRANSITION PANEL(S) - TO BE USED FOR TRANSITIONING THE CROSS-SLOPE OF A RAMP TO THE EXISTING WALK CROSS-SLOPE. RATE OF TRANSITION SHOULD BE 0.5% PER 1 LINEAR FOOT OF WALK. SEE THIS SHEET FOR ADDITIONAL INFORMATION.

REVISION:

APPROVED: JANUARY 23, 2017

OPERATIONS ENGINEER

MINNESOTA DEPARTMENT OF TRANSPORTATION

STATE DESIGN ENGINEER

REVISED:

APPROVED: 1-23-2017

PEDESTRIAN CURB RAMP DETAILS

STANDARD PLAN 5-297.250 | 5 OF 6

STATE PROJ.NO. XXXX-XX (T.H.156) SHEET NO. 13 OF 20 SHEETS

PLOTTED/REVISED: 21-FEB-2018
DISTRICT #: Metro
IPLOT NAME: 013 ped curb ramp details 5 (13)
PATH & FILENAME: OTST\Signals\SamplePlan\Sample Plan (12-21-18).dgn

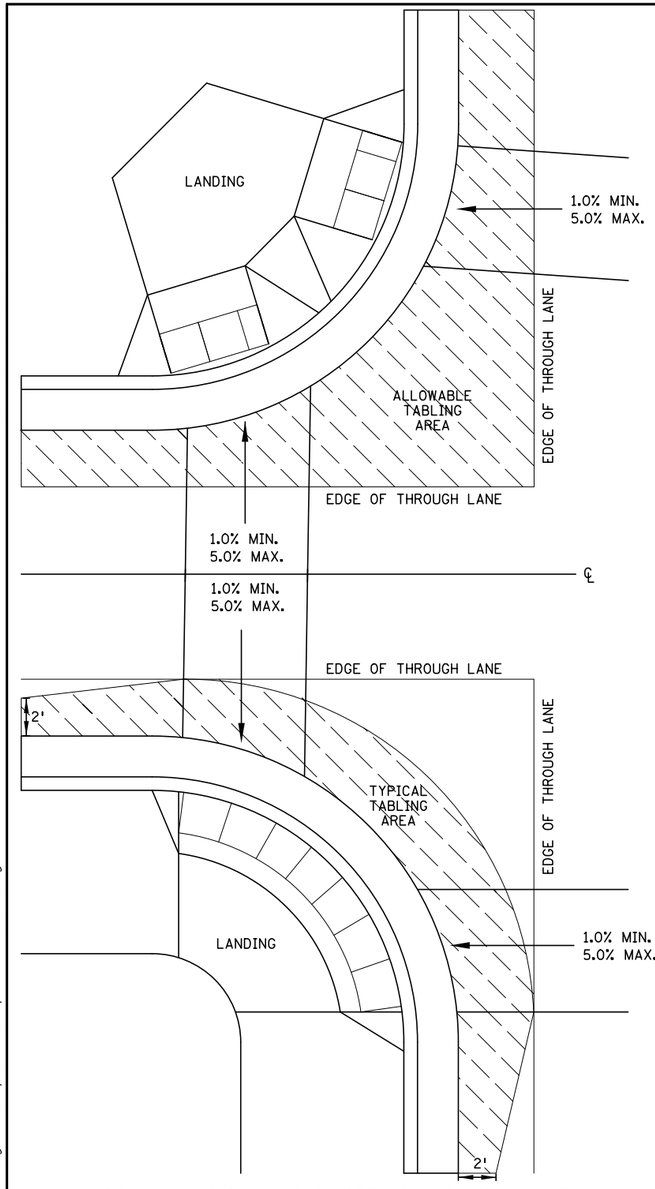

CURB LINE AND ROAD CROSSING ADJUSTMENTS

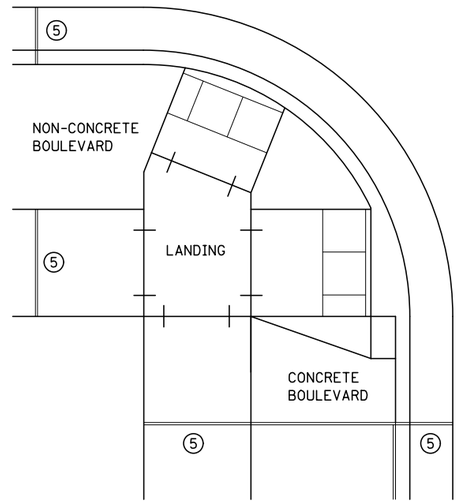

EXPANSION MATERIAL PLACEMENT FOR CONCRETE AND BITUMINOUS ROADWAYS

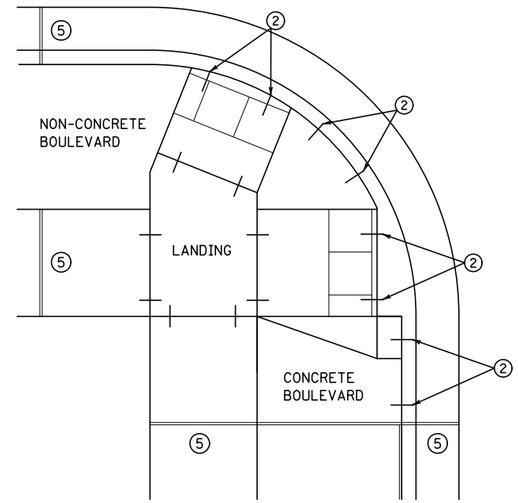

OPTIONAL CURB LINE REINFORCEMENT PLACEMENT ON BITUMINOUS ROADWAYS ④

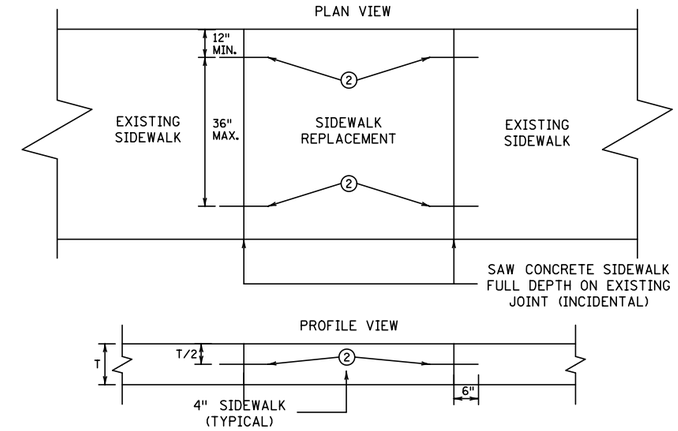

OPTIONAL SIDEWALK REINFORCEMENT

SIDEWALK REINFORCEMENT TO BE USED ONLY WHEN SPECIFIED IN THE PLAN.

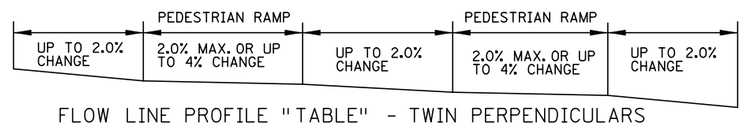

FLOW LINE PROFILE "TABLE" - TWIN PERPENDICULARS

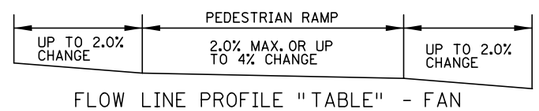

FLOW LINE PROFILE "TABLE" - FAN

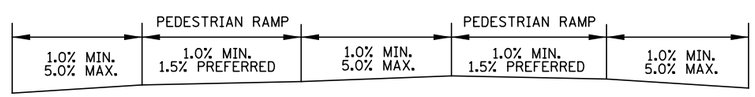

FLOW LINE PROFILE RAISE - TWIN PERPENDICULARS

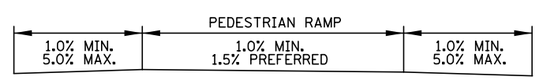

FLOW LINE PROFILE RAISE - FAN

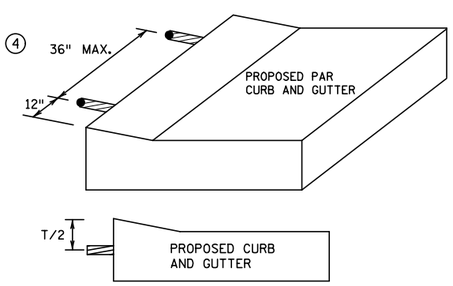

OPTIONAL CURB LINE REINFORCEMENT DETAILS ②④

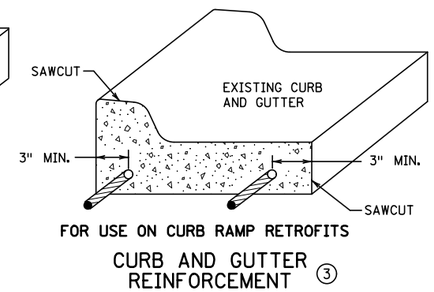

FOR USE ON CURB RAMP RETROFITS

CURB AND GUTTER REINFORCEMENT ③

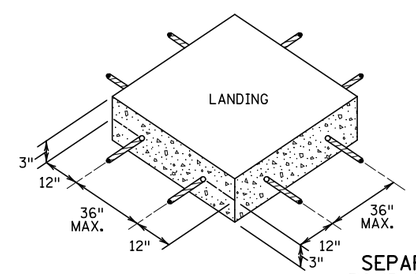

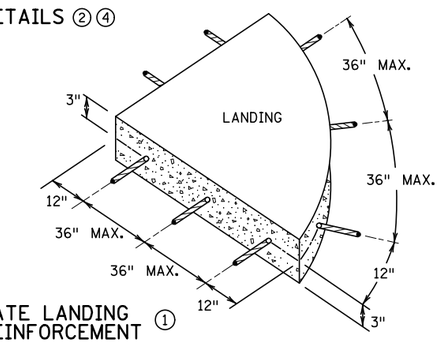

SEPARATE LANDING POUR REINFORCEMENT ①

NOTES:

① TO ENSURE RAMPS AND LANDINGS ARE PROPERLY CONSTRUCTED, ALL INITIAL LANDINGS AT A TOP OF A RAMPED SURFACE (RUNNING SLOPE GREATER THAN 2%) SHALL BE FORMED AND PLACED SEPARATELY IN AN INDEPENDENT CONCRETE POUR. FOLLOW SIDEWALK REINFORCEMENT DETAILS ON THIS SHEET FOR ALL SEPARATELY POURED INITIAL LANDINGS.

② DRILL AND GROUT NO. 4 12" LONG REINFORCEMENT BARS AT 36" MAXIMUM CENTER TO CENTER (EPOXY COATED). BARS TO BE ADJUSTED TO MATCH RAMP GRADE.

③ DRILL AND GROUT 2 - NO. 4 X 12" LONG REINFORCEMENT BARS (EPOXY COATED). REINFORCEMENT REQUIRED FOR ALL CONSTRUCTION JOINTS WITHIN RADIUS.

④ THIS OPTIONAL CURB LINE REINFORCEMENT DETAIL SHOULD ONLY BE USED ON BITUMINOUS ROADWAYS WHEN SPECIFIED IN THE PLAN.

⑤ 1/2 IN. PREFORMED JOINT FILLER MATERIAL PER MNDOT SPEC. 3702.

"TABLING" OF CROSSWALKS MEANS MAINTAINING LESS THAN 2% CROSS SLOPE WITHIN A CROSSWALK, IS REQUIRED WHEN A ROADWAY IS IN A STOP OR YIELD CONDITION AND THE PROJECT SCOPE ALLOWS.

RECONSTRUCTION PROJECTS: ON FULL PAVEMENT REPLACEMENT PROJECTS "TABLING" OF ENTIRE CROSSWALK SHALL OCCUR WHEN FEASIBLE.

MILL & OVERLAY PROJECTS: "TABLING" OF FLOW LINES, IN FRONT OF THE PEDESTRIAN RAMP, IS REQUIRED WHEN THE EXISTING FLOW LINE IS GREATER THAN 2%. WARPING OF THE BITUMINOUS PAVEMENT CAN NOT EXTEND INTO THE THROUGH LANE. TABLE THE FLOW LINE TO 2% OR AS MUCH AS POSSIBLE WHILE ADHERING TO THE FOLLOWING CRITERIA;

1) 1.0% MIN. CROSS-SLOPE OF THE ROAD
2) 5.0% MAX. CROSS-SLOPE OF THE ROAD
3) "TABLE" FLOW LINE UP TO 4% CHANGE FROM EXISTING SLOPE IN FRONT OF PEDESTRIAN RAMP
4) UP TO 2% CHANGE IN FLOW LINE FROM EXISTING SLOPE BEYOND THE PEDESTRIAN CURB RAMP

STAND-ALONE ADA RETROFITS: FOLLOW MILL & OVERLAY CRITERIA ABOVE HOWEVER ALL PAVEMENT WARPING IS DONE WITH BITUMINOUS PATCHING ON BITUMINOUS ROADWAYS AND FULL-DEPTH APRON REPLACEMENT ON CONCRETE ROADWAYS.

RAISING OF CURB LINES SHOULD OCCUR IN VERTICALLY CONSTRAINED AREAS. RAISE THE CURB LINES ENOUGH TO ALLOW COMPLIANT RAMPS OR AS MUCH AS POSSIBLE WHILE ADHERING TO THE FOLLOWING CRITERIA;

1) 1.0% MIN. AND 5.0% MAXIMUM CROSS-SLOPE OF THE ROAD
2) 1.0% MIN. FLOW LINE (ON EITHER SIDE OF PEDESTRIAN RAMP) TO MAINTAIN POSITIVE DRAINAGE
3) 5.0% RECOMMENDED MAX. FLOW LINE
4) LONGITUDINAL THROUGH LANE ROADWAY TAPERS SHOULD BE 1" VERTICAL PER 15' HORIZONTAL

REVISION:

APPROVED: JANUARY 23, 2017

OPERATIONS ENGINEER

MINNESOTA DEPARTMENT OF TRANSPORTATION

STATE DESIGN ENGINEER

REVISED:

APPROVED: 1-23-2017

PEDESTRIAN CURB RAMP DETAILS

STANDARD PLAN 5-297.250 | 6 OF 6

STATE PROJ.NO. XXXX-XX (T.H.156) | SHEET NO. 14 OF 20 SHEETS

PLOTTED/REVISED: 21-FEB-2018
DISTRICT #: Metro
IPLOT NAME: 014 ped curb ramp details 6 (14)
PATH & FILENAME: OTST\Signals\SamplePlan\Sample Plan (12-21-18).dgn

SIGNAL HEAD CHART

FACE	R	Y	FYA	G
1-1, 1-2	←	←	←	←
2-1, 2-2, 2-3	●	●		●
3-1, 3-2	←	←	←	←
4-1, 4-2	●	●		●
5-1, 5-2	←	←	←	←
6-1, 6-2, 6-3	●	●		●
7-1, 7-2	←	←	←	←
8-1, 8-2	●	●		●

- ALL SIGNAL INDICATIONS SHALL BE 12" LED
- ALL SIGNAL HEADS SHALL BE BLACK POLYCARBONATE WITH BACKGROUND SHIELDS
- FYA DENOTES FLASHING YELLOW ARROW

LOOP DETECTOR CHART

NUMBER	SIZE (FT)	LOCATION
D1-1, D5-1	2-6x6	20 & 50
D1-2, D5-2	2-6x6	5 & 35
D2-1, D2-2	6x6	400
D3-1, D7-1	2-6x6	20 & 50
D3-2, D7-2	2-6x6	5 & 35
D4-1, D8-1	6x6	120
D4-2, D8-2	6x6	5
D4-3, D8-3	2-6x6	5 & 20
D6-1, D6-2	6x6	400

- ALL LOOP DETECTORS SHALL BE PVC UNLESS NOTED OTHERWISE
- LOCATION: DISTANCE FROM CROSSWALK/STOP BAR IN FEET

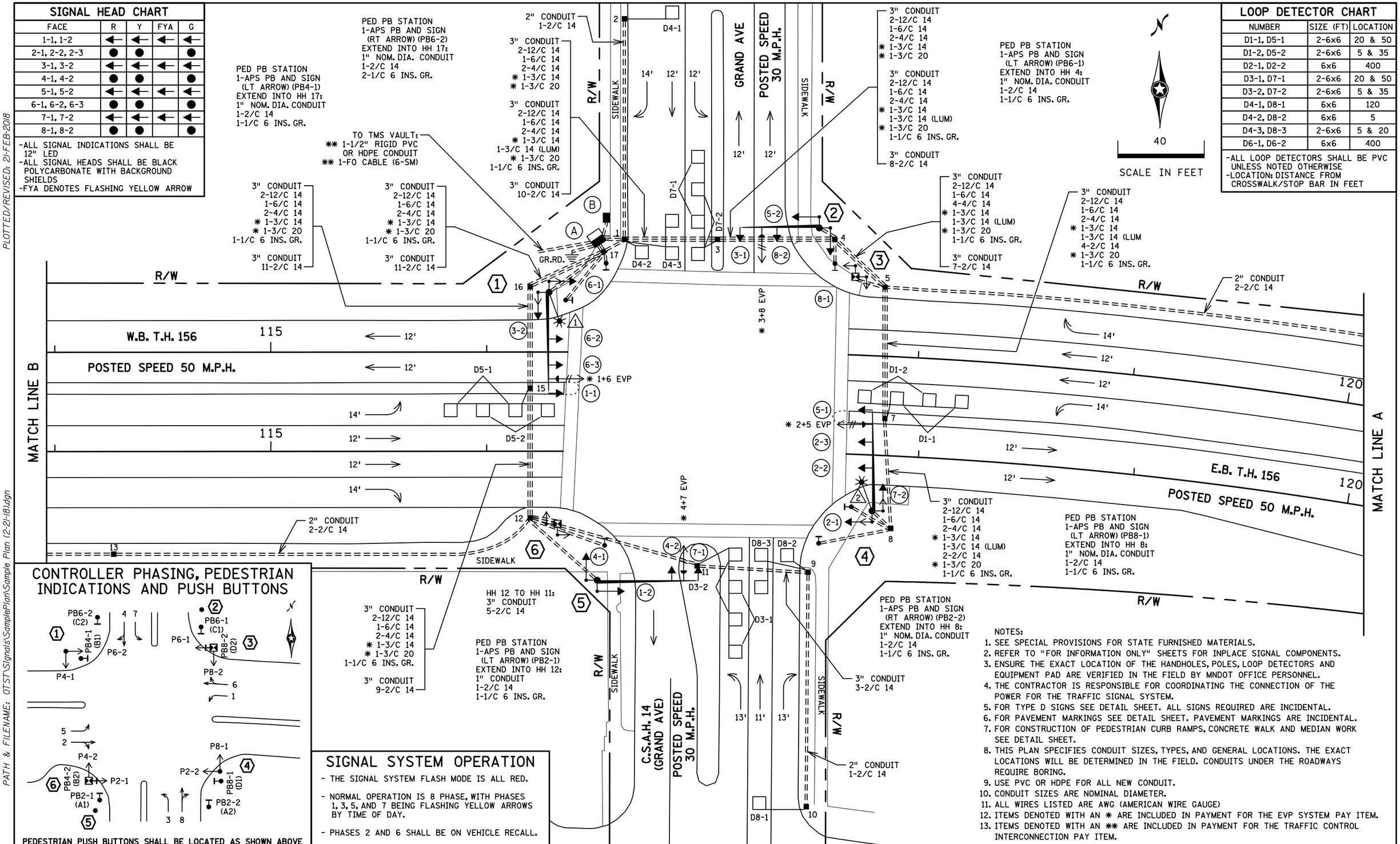

CONTROLLER PHASING, PEDESTRIAN INDICATIONS AND PUSH BUTTONS

PEDESTRIAN PUSH BUTTONS SHALL BE LOCATED AS SHOWN ABOVE

SIGNAL SYSTEM OPERATION

- THE SIGNAL SYSTEM FLASH MODE IS ALL RED.
- NORMAL OPERATION IS 8 PHASE, WITH PHASES 1, 3, 5, AND 7 BEING FLASHING YELLOW ARROWS BY TIME OF DAY.
- PHASES 2 AND 6 SHALL BE ON VEHICLE RECALL.

NOTES:

1. SEE SPECIAL PROVISIONS FOR STATE FURNISHED MATERIALS.
2. REFER TO "FOR INFORMATION ONLY" SHEETS FOR INPLACE SIGNAL COMPONENTS.
3. ENSURE THE EXACT LOCATION OF THE HANDHOLES, POLES, LOOP DETECTORS AND EQUIPMENT PAD ARE VERIFIED IN THE FIELD BY MNDOT OFFICE PERSONNEL.
4. THE CONTRACTOR IS RESPONSIBLE FOR COORDINATING THE CONNECTION OF THE POWER FOR THE TRAFFIC SIGNAL SYSTEM.
5. FOR TYPE D SIGNS SEE DETAIL SHEET. ALL SIGNS REQUIRED ARE INCIDENTAL.
6. FOR PAVEMENT MARKINGS SEE DETAIL SHEET. PAVEMENT MARKINGS ARE INCIDENTAL.
7. FOR CONSTRUCTION OF PEDESTRIAN CURB RAMPS, CONCRETE WALK AND MEDIAN WORK SEE DETAIL SHEET.
8. THIS PLAN SPECIFIES CONDUIT SIZES, TYPES, AND GENERAL LOCATIONS. THE EXACT LOCATIONS WILL BE DETERMINED IN THE FIELD. CONDUITS UNDER THE ROADWAYS REQUIRE BORING.
9. USE PVC OR HDPE FOR ALL NEW CONDUIT.
10. CONDUIT SIZES ARE NOMINAL DIAMETER.
11. ALL WIRES LISTED ARE AWG (AMERICAN WIRE GAUGE)
12. ITEMS DENOTED WITH AN * ARE INCLUDED IN PAYMENT FOR THE EVP SYSTEM PAY ITEM.
13. ITEMS DENOTED WITH AN ** ARE INCLUDED IN PAYMENT FOR THE TRAFFIC CONTROL INTERCONNECTION PAY ITEM.

BY	DATE	REVISIONS

SYSTEM ID: XXXXX T.E. XXXX
METER ADDRESS: 9999 GRAND AVE.
OLD SYSTEM ID:

INTERSECTION LAYOUT
TRAFFIC CONTROL SIGNAL SYSTEM
T.H. 156 AT C.S.A.H. 14 (GRAND AVE.)
IN SOUTH ST. PAUL, DAKOTA COUNTY

S.A.P. NO. | DRAWN BY: | CKD BY: | DATE:
CERTIFIED BY _____ LICENSED PROFESSIONAL ENGINEER LIC. NO. _____ DATE: _____
STATE PROJ.NO. XXXX-XX (T.H.156) SHEET NO. 15 OF 20 SHEETS

PLOTTED/REVISED: 21-FEB-2018
DISTRICT *: Metro
IPLOT NAME: 015 layout (15)
PATH & FILENAME: OTST\Signals\SamplePlan\Sample Plan (2-21-18).dgn

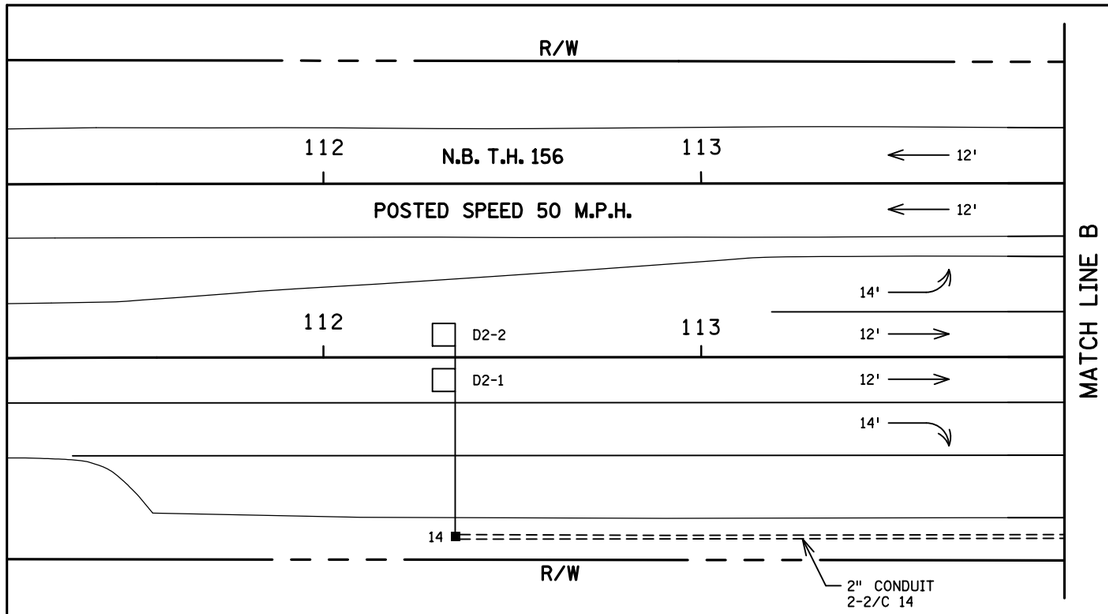

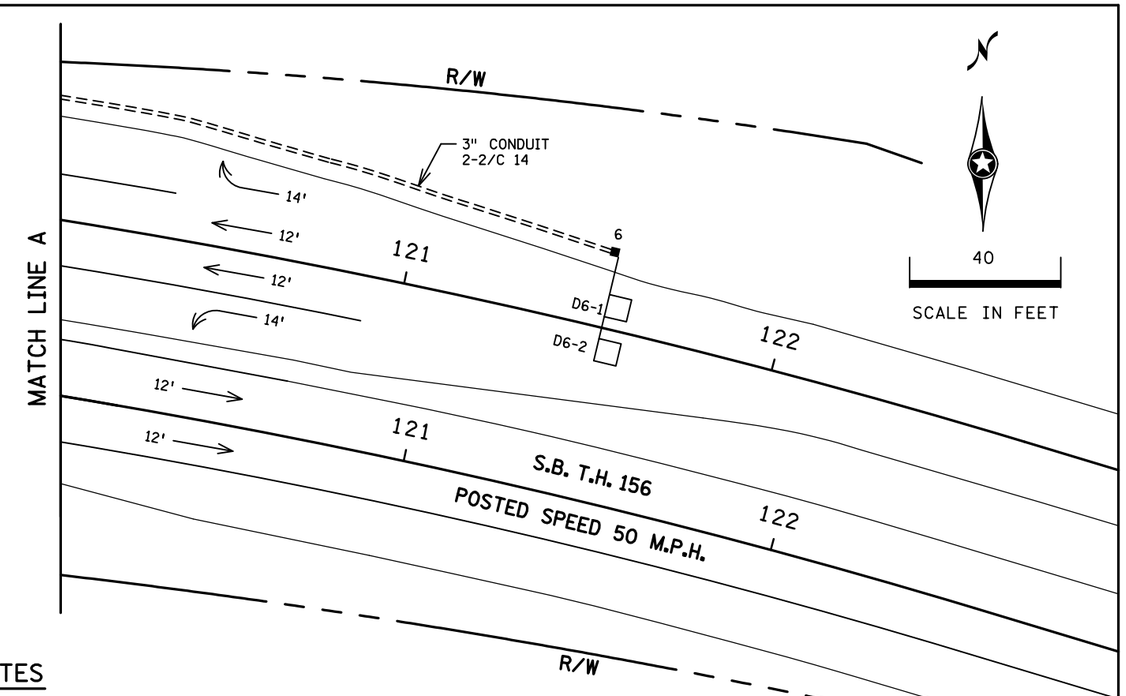

INTERSECTION NOTES

(1) PA100 POLE FOUNDATION
TYPE PA100-A-45-D40-9 (DAVIT AT 350 DEG)
1-PAIR SWING AWAY HINGES
1-ANGLE MOUNT SIGNAL OVERHEAD AT 0'
2-STRAIGHT MOUNT SIGNALS OVERHEAD
AT 12' AND 24'
2-ANGLE MOUNT SIGNALS AT 90 AND 180 DEG
2-ANGLE MOUNT C.D. PED HEADS
AT 90 AND 180 DEG
✱ 1-ONE WAY EVP DETECTOR AND
CONFIRMATORY LIGHT (PHASES 1+6)
LUMINAIRE-LED (FOR 40' MOUNTING HEIGHT)
1-R10-X12 SIGN ADJACENT TO HEAD (1-1)
1-TYPE D SIGN (D-2) (SEE SIGN DETAILS)
3" CONDUIT TO HH 17:
2-12/C 14
1-6/C 14
2-4/C 14
✱ 1-3/C 14
1-3/C 14 (LUM)
✱ 1-3/C 20
1-1/C 6 INS. GR.

(2) PA90 POLE FOUNDATION
TYPE PA90-A-35
1-ANGLE MOUNT SIGNAL OVERHEAD AT 0'
1-STRAIGHT MOUNT SIGNAL OVERHEAD AT 11'
2-ANGLE MOUNT SIGNALS AT 90 AND 180 DEG
✱ 1-ONE WAY EVP DETECTOR AND
CONFIRMATORY LIGHT (PHASES 3+8)
1-R10-X12 SIGN ADJACENT TO HEAD (3-1)
1-TYPE D SIGN (D-1) (SEE SIGN DETAILS)
3" CONDUIT TO HH 4:
2-12/C 14
1-6/C 14
✱ 1-3/C 14
✱ 1-3/C 20
1-1/C 6 INS. GR.

(3) PEDESTAL FOUNDATION
10' PEDESTAL POLE PLUS BASE
2-STRAIGHT MOUNT C.D. PED HEADS
AT 90 AND 180 DEG
1-APS PB AND SIGN (RT ARROW) (PB8-2)
AND APS PB MOUNTING SPACERS
3" CONDUIT TO HH 5:
2-4/C 14
1-2/C 14
2-1/C 6 INS. GR.

(A) EQUIPMENT PAD (SEE DETAIL SHEET)
SERVICE CABINET (SSB) NO BATTERY BACKUP SYSTEM OR BATTERIES
CONTROLLER AND CABINET (STATE FURNISHED)

3" CONDUIT TO HH 17:	3" CONDUIT TO HH 1:
2-12/C 14	2-12/C 14
1-6/C 14	1-6/C 14
2-4/C 14	2-4/C 14
✱ 1-3/C 14	✱ 1-3/C 14
✱ 1-3/C 20	✱ 1-3/C 20
3" CONDUIT TO HH 17:	3" CONDUIT TO HH 1:
2-12/C 14	2-12/C 14
1-6/C 14	1-6/C 14
2-4/C 14	2-4/C 14
✱ 1-3/C 14	✱ 1-3/C 14
✱ 1-3/C 20	✱ 1-3/C 20
1-1/C 6 INS. GR.	1-1/C 6 INS. GR.
3" CONDUIT TO HH 17:	3" CONDUIT TO HH 17:
13-2/C 14	13-2/C 14

GROUND WIRE AND GROUND ROD - MIN 8' OUT FROM PAD
2-2" AND 1-3" CONDUIT STUBBED OUT (CAPPED BOTH ENDS
✱✱ 1-1/2" CONDUIT TO TMS VAULT:
✱✱ 1-FO PIGTAIL (6-SM)
CONTROLLER CABINET TO SERVICE CABINET:
2" CONDUIT
3-1/C 6
CONTROLLER CABINET TO SERVICE CABINET (COMMS):
2" CONDUIT
1-6PR 19
SERVICE CABINET TO GROUND MOUNTED TRANSFORMER:
2" CONDUIT
3-1/C 2

SERVICE CABINET TO HH 17:
2" CONDUIT
2-3/C 14 (LUM)
SERVICE CABINET TO EXTERNAL GR. RD.:
1" CONDUIT
1-1/C 6 INS. GR.
(SEE EQUIPMENT PAD LAYOUT)
HH 17 TO HH 1:
2" CONDUIT
1-3/C 14 (LUM)

(B) SOP-GROUND MOUNTED
TRANSFORMER (XCEL ENERGY)
2" CONDUIT INTO SERVICE CABINET:
3-1/C 2

(5) PA100 POLE FOUNDATION
TYPE PA100-A-45
1-ANGLE MOUNT SIGNAL OVERHEAD AT 0'
1-STRAIGHT MOUNT SIGNAL OVERHEAD AT 11'
2-ANGLE MOUNT SIGNALS AT 90 AND 180 DEG
✱ 1-ONE WAY EVP DETECTOR AND
CONFIRMATORY LIGHT (PHASES 4+7)
1-R10-X12 SIGN ADJACENT TO HEAD (7-1)
1-TYPE D SIGN (D-1) (SEE SIGN DETAILS)
3" CONDUIT TO HH 12:
2-12/C 14
1-6/C 14
✱ 1-3/C 14
✱ 1-3/C 20
1-1/C 6 INS. GR.

(4) PA100 POLE FOUNDATION
TYPE PA100-A-45-D40-9 (DAVIT AT 350 DEG)
1-PAIR SWING AWAY HINGES
1-ANGLE MOUNT SIGNAL OVERHEAD AT 0'
2-STRAIGHT MOUNT SIGNALS OVERHEAD
AT 12' AND 24'
2-ANGLE MOUNT SIGNALS AT 90 AND 180 DEG
2-ANGLE MOUNT C.D. PED HEADS
AT 90 AND 180 DEG
✱ 1-ONE WAY EVP DETECTOR AND
CONFIRMATORY LIGHT (PHASES 2+5)
LUMINAIRE-LED (FOR 40' MOUNTING HEIGHT)
1-R10-X12 SIGN ADJACENT TO HEAD (5-1)
1-TYPE D SIGN (D-2) (SEE SIGN DETAILS)
3" CONDUIT TO HH 8:
2-12/C 14
1-6/C 14
2-4/C 14
✱ 1-3/C 14
1-3/C 14 (LUM)
✱ 1-3/C 20
1-1/C 6 INS. GR.

(6) PEDESTAL FOUNDATION
10' PEDESTAL POLE PLUS BASE
2-STRAIGHT MOUNT C.D. PED HEADS
AT 90 AND 180 DEG
1-APS PB AND SIGN (RT ARROW) (PB4-2)
AND APS PB MOUNTING SPACERS
3" CONDUIT TO HH 12:
2-4/C 14
1-2/C 14
1-1/C 6 INS. GR.

BY	DATE	REVISIONS

SYSTEM ID: XXXXX T.E. XXXX
METER ADDRESS: 9999 GRAND AVE.
OLD SYSTEM ID:

MATCH LINE LAYOUT/INTERSECTION NOTES
TRAFFIC CONTROL SIGNAL SYSTEM
T.H. 156 AT C.S.A.H. 14 (GRAND AVE.)
IN SOUTH ST. PAUL, DAKOTA COUNTY

S.A.P. NO. | DRAWN BY: | CKD BY: | DATE:
CERTIFIED BY _____ LICENSED PROFESSIONAL ENGINEER LIC. NO. _____ DATE: _____
STATE PROJ. NO. XXXX-XX (T.H.156) SHEET NO. 16 OF 20 SHEETS

PLOTTED/REVISED: 21-FEB-2018
DISTRICT #: Metro
IPLOT NAME: 016 match lines & notes (16)
PATH & FILENAME: OTST\Signals\SamplePlan\Sample Plan (12-21-18).dgn

PLOTTED/REVISED: 21-FEB-2018
DISTRICT #: Metro
IPLOT NAME: 017 wiring 1(17)
PATH & FILENAME: OTST\Signals\SamplePlan\Sample Plan (2-21-18).dgn

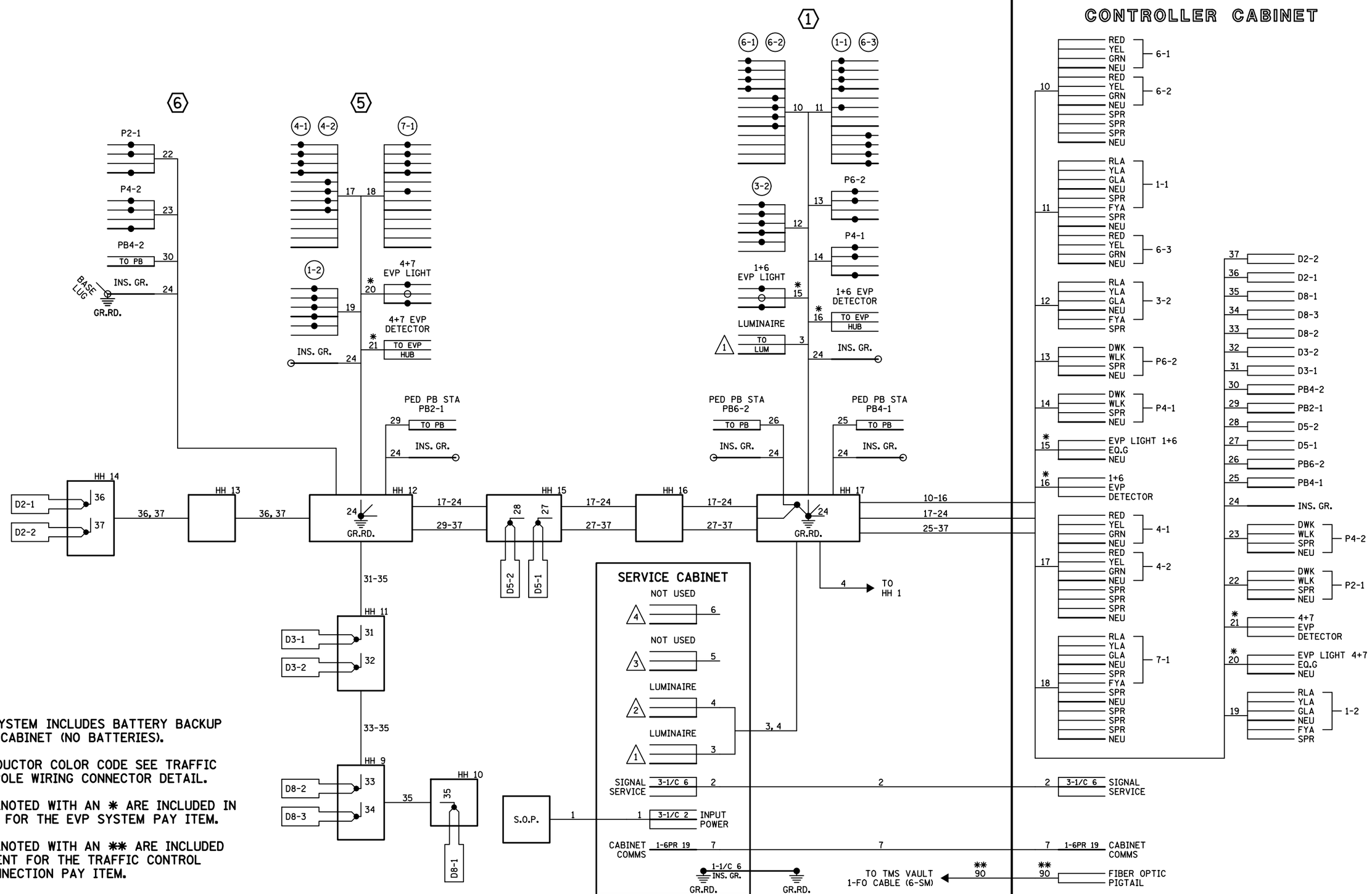

NOTES:

1. SIGNAL SYSTEM INCLUDES BATTERY BACKUP SERVICE CABINET (NO BATTERIES).
2. FOR CONDUCTOR COLOR CODE SEE TRAFFIC SIGNAL POLE WIRING CONNECTOR DETAIL.
3. ITEMS DENOTED WITH AN ✱ ARE INCLUDED IN PAYMENT FOR THE EVP SYSTEM PAY ITEM.
4. ITEMS DENOTED WITH AN ✱✱ ARE INCLUDED IN PAYMENT FOR THE TRAFFIC CONTROL INTERCONNECTION PAY ITEM.

BY	DATE	REVISIONS

SYSTEM ID: XXXXX T.E. XXXX
METER ADDRESS: 9999 GRAND AVE.
OLD SYSTEM ID:

FIELD WIRING DIAGRAM (1 OF 2)
TRAFFIC CONTROL SIGNAL SYSTEM
T.H. 156 AT C.S.A.H. 14 (GRAND AVE.)
IN SOUTH ST. PAUL, DAKOTA COUNTY

S.A.P. NO. | DRAWN BY: | CKD BY: | DATE:

CERTIFIED BY _____ LICENSED PROFESSIONAL ENGINEER LIC. NO. _____ DATE: _____

STATE PROJ.NO. XXXX-XX (T.H.156) SHEET NO. 17 OF 20 SHEETS

PLOTTED/REVISED: 21-FEB-2018
DISTRICT #: Metro
IPLOT NAME: 018 wiring 2 (18)
PATH & FILENAME: OTST\Signals\SamplePlan\Sample Plan (2-21-18).dgn

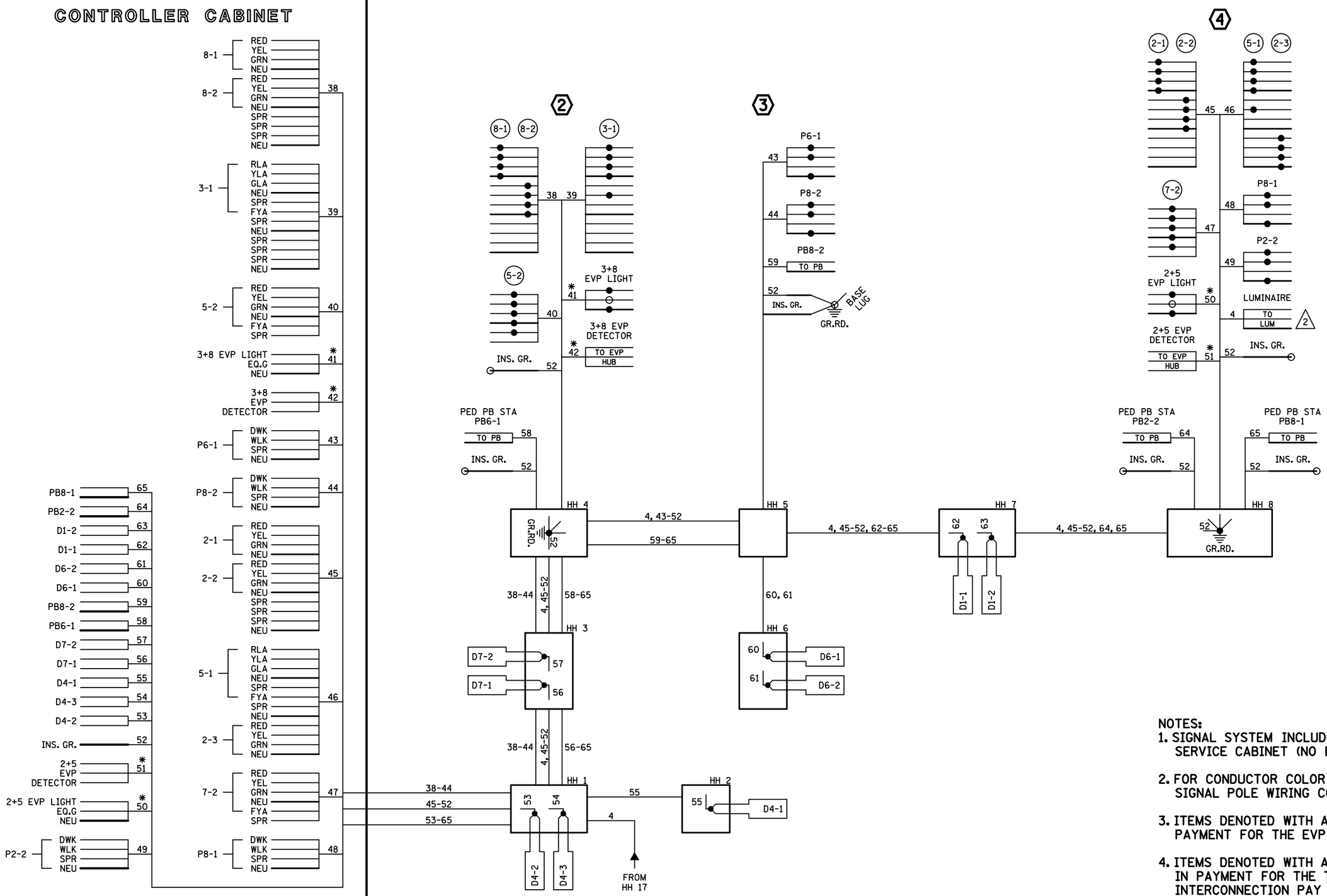

NOTES:

1. SIGNAL SYSTEM INCLUDES BATTERY BACKUP SERVICE CABINET (NO BATTERIES).
2. FOR CONDUCTOR COLOR CODE SEE TRAFFIC SIGNAL POLE WIRING CONNECTOR DETAIL.
3. ITEMS DENOTED WITH AN ✱ ARE INCLUDED IN PAYMENT FOR THE EVP SYSTEM PAY ITEM.
4. ITEMS DENOTED WITH AN ✱✱ ARE INCLUDED IN PAYMENT FOR THE TRAFFIC CONTROL INTERCONNECTION PAY ITEM.

BY	DATE	REVISIONS

SYSTEM ID: XXXXX T.E. XXXX
METER ADDRESS: 9999 GRAND AVE.
OLD SYSTEM ID:

FIELD WIRING DIAGRAM (2 OF 2)
TRAFFIC CONTROL SIGNAL SYSTEM
T.H. 156 AT C.S.A.H. 14 (GRAND AVE.)
IN SOUTH ST. PAUL, DAKOTA COUNTY

S.A.P. NO. | DRAWN BY: | CKD BY: | DATE:

CERTIFIED BY _____ LICENSED PROFESSIONAL ENGINEER LIC. NO. _____ DATE: _____

STATE PROJ.NO. XXXX-XX (T.H.156) SHEET NO. 18 OF 20 SHEETS

PAVEMENT MARKINGS LAYOUT

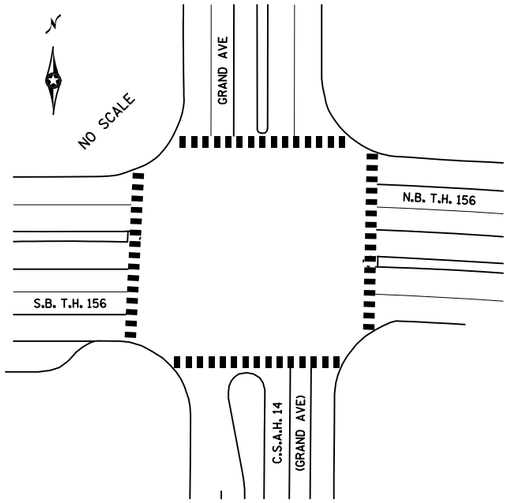

PAVEMENT MARKINGS DETAIL

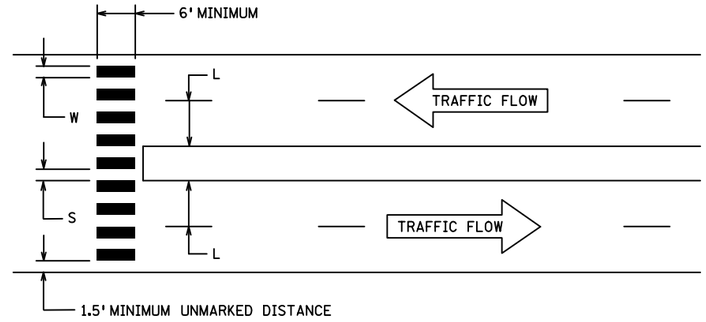

NOT TO SCALE

WIDTH OF INSIDE LANE (L)	WIDTH OF TAPED AREA (W)	WIDTH OF SPACE (S)
9'	2.0'	2.5'
10'	2.5'	2.5'
11'	2.5'	3.0'
12'	3.0'	3.0'
13'	3.0'	3.5'

NOTES:

1. INSTALL PREFORMED PAVEMENT MARKING TAPE FOR PERMANENT TRAFFIC LANE DELINEATION AND LEGENDS IN ACCORDANCE WITH 2582 AND AS FOLLOWS...
2. TAPED AREAS TO BE CENTERED AND ALIGNED ON CENTER LINE AND LANE LINES.
3. ZEBRA CROSSWALKS SHALL BE REFLECTORIZED WHITE POLYMER PREFORMED TAPE.
4. A MINIMUM OF 1.5' CLEAR DISTANCE MUST BE LEFT ADJACENT TO CURB. IF LAST TAPED AREA FALLS INTO THIS DISTANCE, IT MUST BE OMITTED.
5. FURNISHING & INSTALLING PEDESTRIAN MARKINGS SHALL BE INCIDENTAL.
6. FOR DIVIDED ROADWAYS, ADJUSTMENTS IN SPACING OF THE TAPED AREAS SHOULD BE MADE IN THE MEDIAN SO THAT THE TAPED AREAS ARE MAINTAINED IN THEIR PROPER LOCATION ACROSS THE TRAVELED PORTION OF THE ROADWAY.
7. AT SKEWED CROSSWALKS, THE TAPED AREAS ARE TO REMAIN PARALLEL TO THE LANE LINES.
8. CONCRETE PAVEMENT SURFACES AND BITUMINOUS SURFACES, WHERE PAVEMENT MARKINGS CANNOT BE INLAYED IN THE HOT MAT, SHALL BE GROOVED FOR THE INSTALLATION OF THE POLY-PREFORMED MARKINGS. GROOVING SPECIFICATIONS ARE DETAILED IN MN/DOT DIVISION S SPECIAL PROVISIONS.

SIGN DETAILS

SIGN PANELS ON SIGNALS

POLE NUMBER	"A" DISTANCE (FEET) OR POLE	PANEL				
		QTY	CODE NUMBER	LEGEND	SIZE (INCHES)	AREA (SQ FT)
1	0	1	R10-X12	LEFT TURN YIELD ON FLASHING YELLOW ARROW	42 x 48	14.00
1	27	1		GRAND AVE	84 x 24	14.00
1	POLE	1	R6-1R	ONE WAY RIGHT	54 x 18	6.75
1	POLE	1	R6-1L	ONE WAY LEFT	54 x 18	6.75
2	0	1	R10-X12	LEFT TURN YIELD ON FLASHING YELLOW ARROW	42 x 48	14.00
2	13	1		MN156 DBL	48 x 54	18.00
2	POLE	1	R6-1R	ONE WAY RIGHT	54 x 18	6.75
2	POLE	1	R6-1L	ONE WAY LEFT	54 x 18	6.75
4	0	1	R10-X12	LEFT TURN YIELD ON FLASHING YELLOW ARROW	42 x 48	14.00
4	27	1		GRAND AVE	84 x 24	14.00
4	POLE	1	R6-1R	ONE WAY RIGHT	54 x 18	6.75
4	POLE	1	R6-1L	ONE WAY LEFT	54 x 18	6.75
5	0	1	R10-X12	LEFT TURN YIELD ON FLASHING YELLOW ARROW	42 x 48	14.00
5	13	1		MN156 DBL	48 x 54	18.00
5	POLE	1	R6-1R	ONE WAY RIGHT	54 x 18	6.75
5	POLE	1	R6-1L	ONE WAY LEFT	54 x 18	6.75

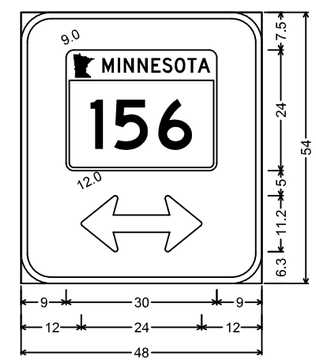

MN156 DBL
6.0" Radius, 1.3" Border, White on, Green;
State Highway 156 M1-5M;
Double Headed Arrow 5 - 24.0" 0';

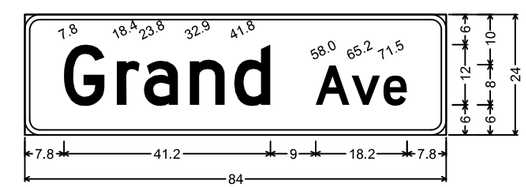

Grand Ave;
3.0" Radius, 1.0" Border, White on, Green;
"Grand Ave", D 2K;

GENERAL NOTES:

1. SEE THE 2020 MnDOT STANDARD SIGNS AND MARKINGS MANUAL FOR STANDARD SIGN DESIGNS, ARROW DETAILS AND SPLICE PLATE DETAILS.
2. FOR NON STANDARD SIGN DESIGNS, LAYOUTS ARE INCLUDED. SIGN PANEL DIMENSIONS ARE IN INCHES.
3. SEE STANDARD PLAN 5-297.731 FOR SIGN MOUNTING TO MAST ARM.
4. SEE STANDARD PLAN 5-297.730 FOR SIGN MOUNTING TO ROUND POST.
5. MOUNTING HEIGHT OF POLE MOUNTED SIGN PANELS MUST BE 7 FOOT MINIMUM. MOUNTING HEIGHT IS MEASURED FROM BOTTOM OF SIGN PANEL TO SURFACE IMMEDIATELY BELOW THE SIGN PANEL.
6. "A" DISTANCE = DISTANCE FROM THE END OF THE MAST ARM TO THE EDGE OF EACH SIGN PANEL.
7. SEE INTERSECTION LAYOUT FOR SIGN PLACEMENT.

IPLOT NAME: Signal subset sample
PATH & FILENAME: OTST\Signing\Non Projects\Task Force Signing Plan updates 2019\Signal Signing Plan\Signal subset sample.dgn PLOTTED/REVISED: 28-SEP-2020

BY	DATE	REVISIONS
BJB	9/2/20	

SYSTEM ID: XXXXX T.E. XXXX
METER ADDRESS: 9999 GRAND AVE.
OLD SYSTEM ID:

PAVEMENT MARKINGS LAYOUT/DETAIL AND TYPE "D" SIGNS DETAILS
T.H. 156 AT C.S.A.H. 14 (GRAND AVE.)
IN SOUTH ST. PAUL, DAKOTA COUNTY

S.A.P. NO. | DRAWN BY: | CKD BY: | DATE:
CERTIFIED BY _____ LICENSED PROFESSIONAL ENGINEER LIC. NO. _____ DATE: _____
STATE PROJ.NO. XXXX-XX (T.H.156) SHEET NO. 19 OF 20 SHEETS

UTILITY OWNERSHIP	
WATER MAIN	CITY OF SO. ST. PAUL
SANITARY SEWER	CITY OF SO. ST. PAUL
STORM SEWER	CITY OF SO. ST. PAUL
BURIED ST. LIGHTING	CITY OF SO. ST. PAUL
BURIED ELECTRIC P-BUR	XCEL ENERGY
BURIED SIGNAL SIG-BUR	MNDOT
BURIED TELEPHONE T-BUR	QWEST CORPORATION
BURIED TELEVISION TV-BUR	QWEST CORPORATION
TELEPHONE IN CONDUIT T =	QWEST CORPORATION

LEGEND

- ELECTRIC METER
- LIGHT POLE
- SIGNAL POLE
- HANDHOLE
- HYDRANT
- GATE VALVE
- POWER POLE
- CATCH BASIN
- APRON
- PEDESTAL

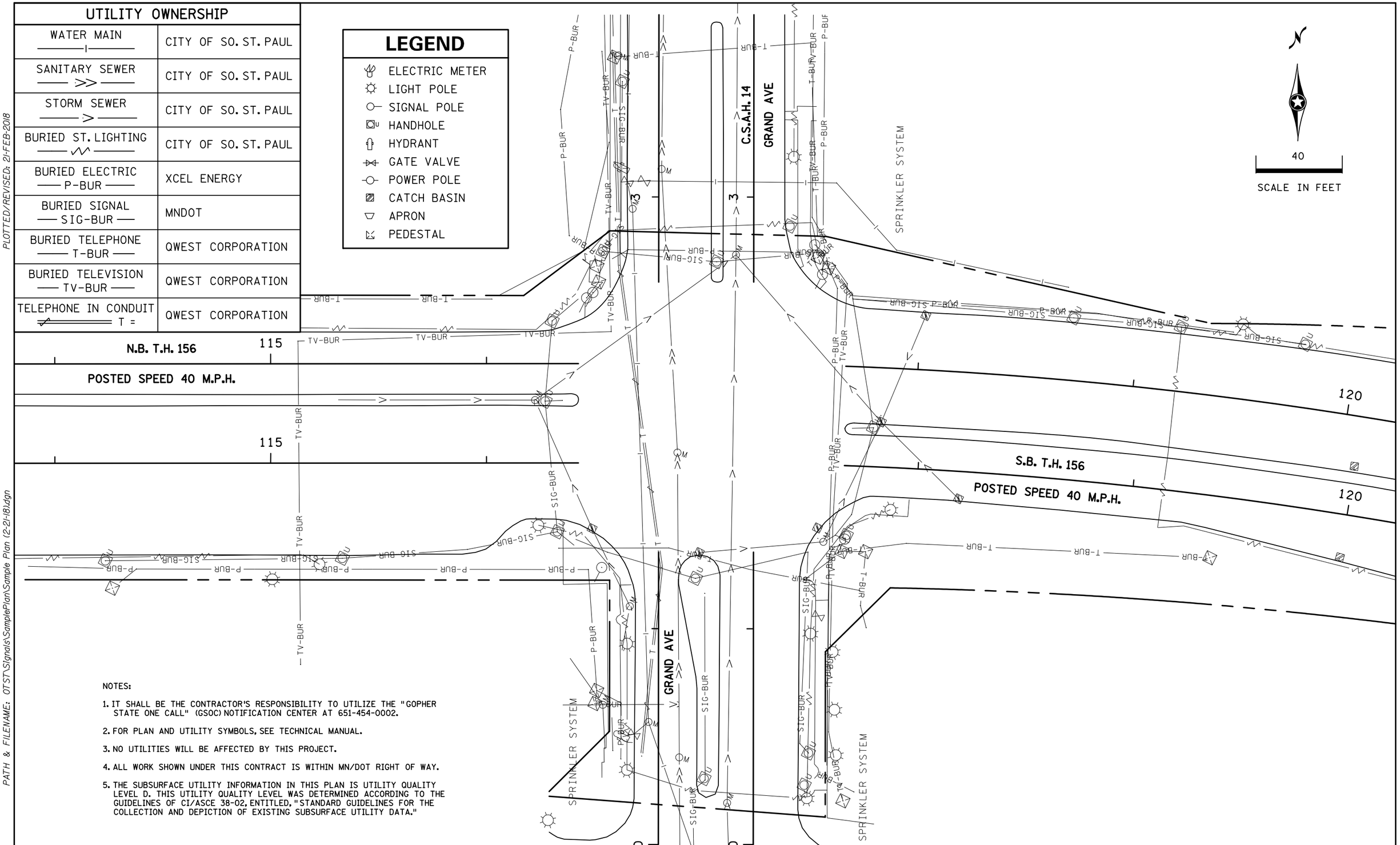

NOTES:

1. IT SHALL BE THE CONTRACTOR'S RESPONSIBILITY TO UTILIZE THE "GOPHER STATE ONE CALL" (GSOC) NOTIFICATION CENTER AT 651-454-0002.
2. FOR PLAN AND UTILITY SYMBOLS, SEE TECHNICAL MANUAL.
3. NO UTILITIES WILL BE AFFECTED BY THIS PROJECT.
4. ALL WORK SHOWN UNDER THIS CONTRACT IS WITHIN MN/DOT RIGHT OF WAY.
5. THE SUBSURFACE UTILITY INFORMATION IN THIS PLAN IS UTILITY QUALITY LEVEL D. THIS UTILITY QUALITY LEVEL WAS DETERMINED ACCORDING TO THE GUIDELINES OF CI/ASCE 38-02, ENTITLED, "STANDARD GUIDELINES FOR THE COLLECTION AND DEPICTION OF EXISTING SUBSURFACE UTILITY DATA."

BY	DATE	REVISIONS

SYSTEM ID: XXXXX T.E. XXXX
METER ADDRESS: 9999 GRAND AVE.
OLD SYSTEM ID:

UTILITIES LAYOUT
T.H. 156 AT C.S.A.H. 14 (GRAND AVE.)
IN SOUTH ST. PAUL, DAKOTA COUNTY

S.A.P. NO. | DRAWN BY: | CKD BY: | DATE:

CERTIFIED BY _____ LICENSED PROFESSIONAL ENGINEER LIC. NO. _____ DATE: _____

STATE PROJ.NO. XXXX-XX (T.H.156) SHEET NO. 20 OF 20 SHEETS

PLOTTED/REVISED: 21-FEB-2018
DISTRICT #: Metro
IPLOT NAME: 020 utilities (20)
PATH & FILENAME: OTST\Signals\SamplePlan\Sample Plan (2-21-18).dgn