APPENDIX - TABLE OF CONTENTS

Appendix - Table of Contents 1
MnDOT District Phone Numbers and Addresses 3
Traffic Control Signal Plan Symbols and Abbreviations 5
MnDOT Technical Manual Symbols 6
350 ATCC Equipment Pad Layout 10
352 ATCC Equipment Pad Layout 11
Loop Detector Test Report 12
Inspection Report 13
Schedule of Materials Control for 2016 Standard Specifications 15
Contractor Certification of Disposal 19
UPS Hook UP Chart 20
Meyers NEMA Cabinet Hook Up Chart 21
MnDOT Traffic Signal Controller Input Alarms 22
Structural Details for Signal Mast Arm Mounted Signs 23
Electric Service Information Form for Traffic Control Signal Systems 24
Electric Service Information Form for Lighting Systems 25
Valmont Frangible Base Installation Guidelines 26
Millerbernd Installation Instructions Design E 27
Millerbernd Installation Instructions Design H 28
Steel Screw-In Light Foundations Design E & H Sheet 29
Steel Screw-In Light Foundation Design P Sheet 30
Installation Instructions – D Series LED Wall Accessories 31
11SA 2 ½” Saddle Adapter 32
Saddle Adapter APS Hole Templates 33
Locating Responsibility Form 34
Traffic Control Signal Products Listed on the MnDOT APL for Signals 39

Emergency vehicle preemption systems 39
Loop detector and underground products 39
Pedestrian pushbuttons and mounting hardware 39
Pedestrian pushbuttons and mounting hardware 39
Signal head mounting hardware 39
Signal modems 39
Signal service cabinets, UPS systems and batteries 39
Traffic signal paint 39
Vehicle and pedestrian signal housings and indications 39
Fuse and wire holders, pole base connectors, and terminal block coatings 40
Zinc rich paint for galvanized pole repair 40
Roadway Lighting Products Listed on the MnDOT APL for Lighting 40
Steel Screw in Foundations 40
Lighting hardware 40
Luminaires 40
Light Emitting Diode (LED) 40
Service cabinets 40
LED Navigation Lanterns 40
Air Obstruction Lights 40
Useful Web Links 41

MnDOT District Phone Numbers and Addresses

District 1-Duluth	1123 Mesaba Avenue Duluth, MN 55811 (218) 725-2700
District 1-Virginia	101 N Hoover Road Virginia, MN 55792 (218) 742-1100
District 2-Bemidji	3920 Hwy 2 West Bemidji, MN 56601 (218) 755-6500
District 2 – Thief River Falls	248 125th Ave Thief River Falls, MN 56701 (218) 683-8000
Crookston	1320 Sunflower Street Crookston, MN 56716 (218) 277-7950
District 3-Headquarters (Baxter Office)	7694 Industrial Park Road Baxter, MN 56425-8096 (218) 828-5700 (800) 657-3971
District 3 St. Cloud Office	3725 12th Street N. St. Cloud, MN 56303 (320) 223-6500 (800) 657-3961
District 4 Detroit Lakes Office	1000 Highway 10 West Detroit Lakes, MN 56501 (218) 846-3600 (800) 657-3984
District 4 Morris Office	610 Highway 9 South Morris, MN 56267 (320) 208-7000 (800) 657-3877
District 6 Rochester Headquarters	2900 48th Street NW Rochester, MN 55901-5848 (507) 285-7500
District 6 Owatonna Headquarters	1010 21st Avenue NW Owatonna, MN 55060-1005 (507) 446-5500

District 6 Winona Headquarters	5420 Highway 61 West Winona, MN 55987 (507) 453-2907
District 7-Mankato	2151 Bassett Drive Mankato, MN 56001-6888 (507) 304-6100 (800) 657-3747
District 7-Windom	180 S. County Road 26 Windom, MN 56101-1868 (507) 831-8000 (800) 804-3295
District 8-Willmar Headquarters	2505 Transportation Road Willmar, MN 56201 (320) 231-5195 (800) 657-3792
District 8-Marshall Regional Office	1800 East College Drive Marshall, MN 56258 (507) 537-6146 (800) 657-3748
District 8-Hutchinson Regional Office	1400 Adams Street SE Hutchinson, MN 55350 (320) 234-8480 (877) 682-8249
Electrical Services Section	6000 Minnehaha Ave St. Paul, Mn 55111-4059 (651) 366-5750
Metro District 1500 W. County Road B-2	Waters Edge Building Roseville, MN 55113-3174 (651) 234-7500
Office of Traffic, Safety, and Technology (OTST)	1500 West County Road B2 MS 725 Roseville, MN 55113 (651) 234-7000

Traffic Control Signal Plan Symbols and Abbreviations

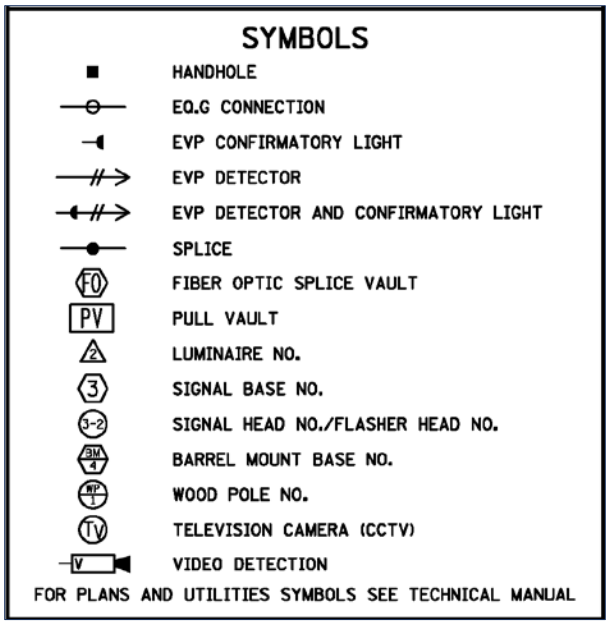

Figure 0-1: Traffic Control Signal Plan Symbols

ABBREVIATIONS

AWF	ADVANCE WARNING FLASHER
C.D.	COUNT DOWN
D2-1 (e.g.)	DETECTOR (PHASE 2, NO. 1)
DEG	DEGREES
DWK	DON'T WALK
F&I	FURNISH AND INSTALL
FL	FLASH/FLASHING
FYA	FLASHING YELLOW ARROW
FYLA	FLASHING YELLOW LEFT ARROW
GLA	GREEN LEFT ARROW
GRN	GREEN INDICATION
GR. RD.	GROUND ROD
GRA	GREEN RIGHT ARROW
GTA	GREEN THRU ARROW
HH	HANDHOLE
IND	INDICATION
INP	INPLACE
INS. GR.	INSULATED GROUND
JB	JUNCTION BOX
LED	LIGHT EMITTING DIODE
LUM	LUMINAIRE
NEU	NEUTRAL
P1-1 (e.g.)	PEDESTRIAN HEAD (PHASE 1, NO. 1)
PB	PUSH BUTTON
PB2-1 (e.g.)	PUSH BUTTON (PHASE 2, NO. 1)
PED	PEDESTRIAN
RED	RED INDICATION
R&S	REMOVE AND SALVAGE
RLA	RED LEFT TURN ARROW
S&I	SALVAGE AND INSTALL
SPR	SPARE
STA	STATION
WLK	WALK INDICATION
YEL	YELLOW INDICATION
YLA	YELLOW LEFT ARROW
YRA	YELLOW RIGHT ARROW

Figure 0-2: Traffic Control Signal Plan Abbreviations

MnDOT Technical Manual Symbols

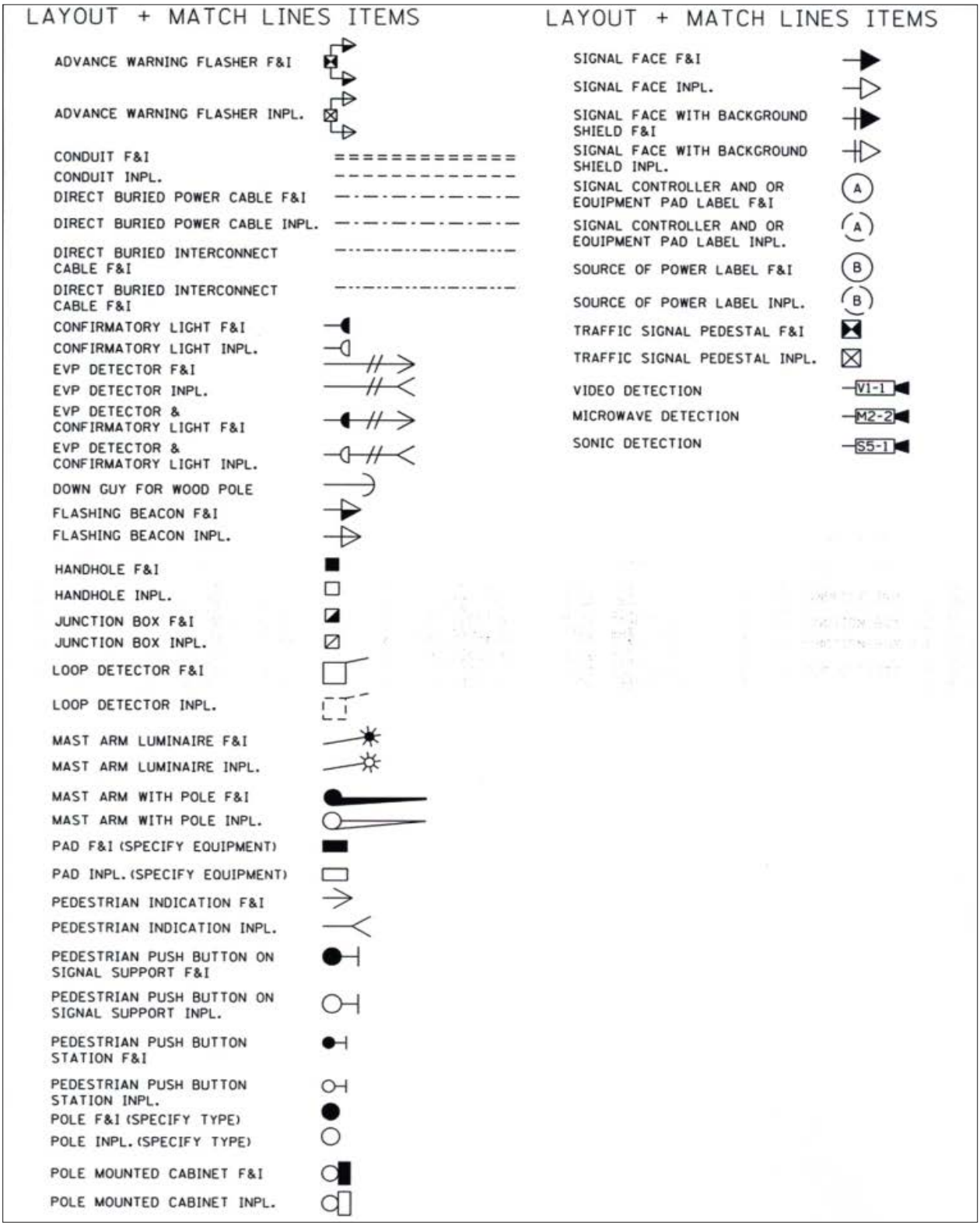

Figure 0-3: MnDOT Technical Manual Symbols

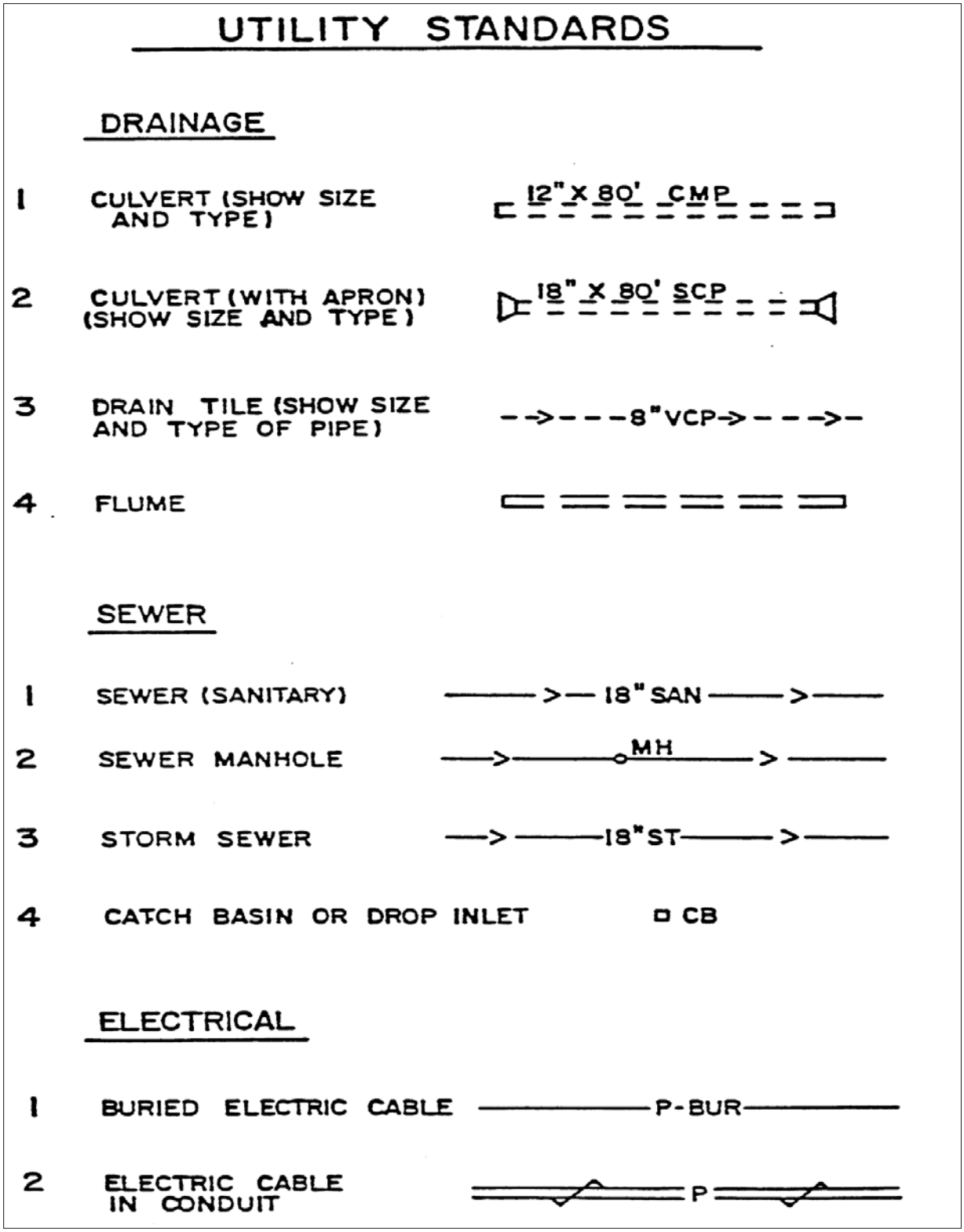

Figure 0-4: Technical Manual Symbols

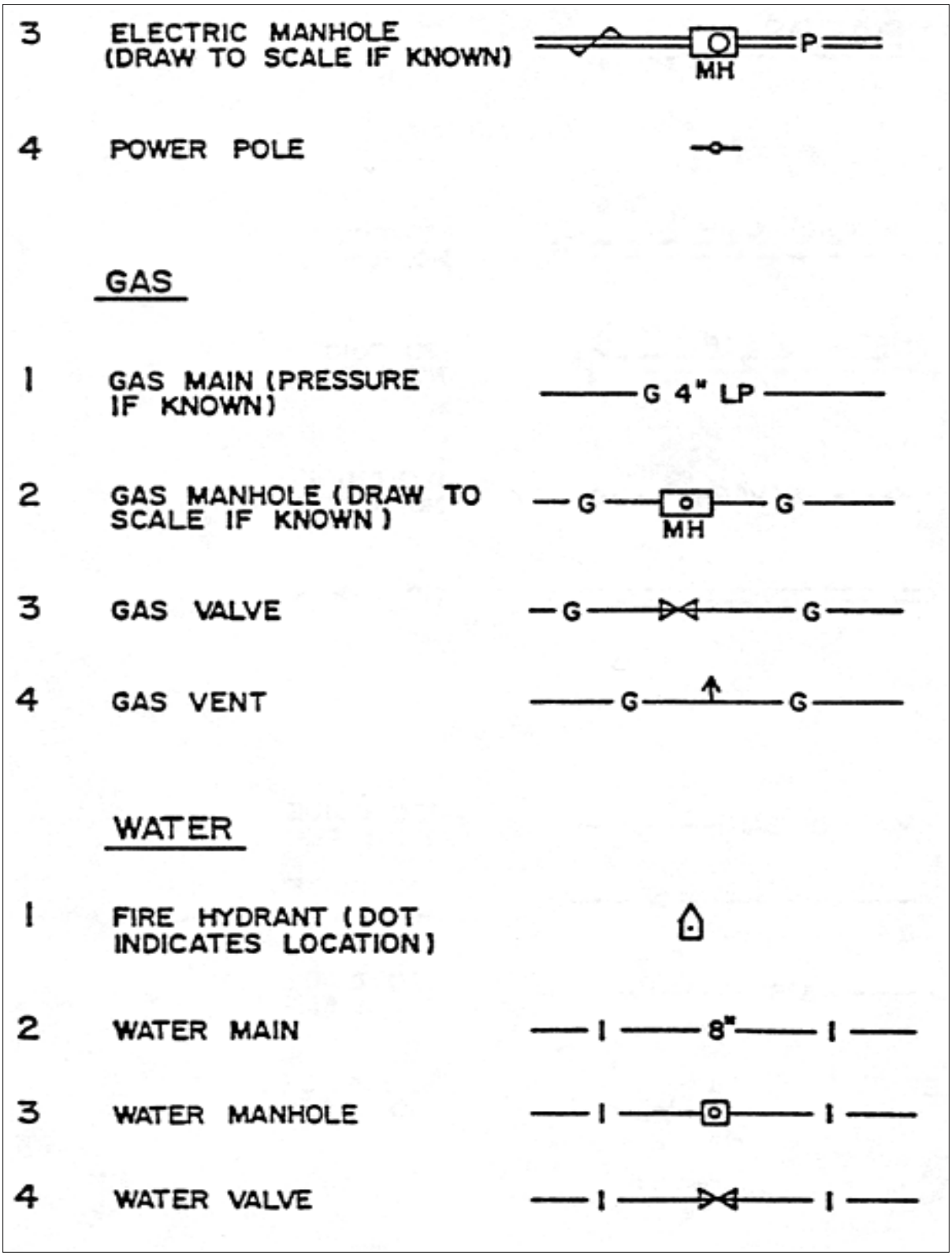

Figure 0-5: Technical Manual Symbols

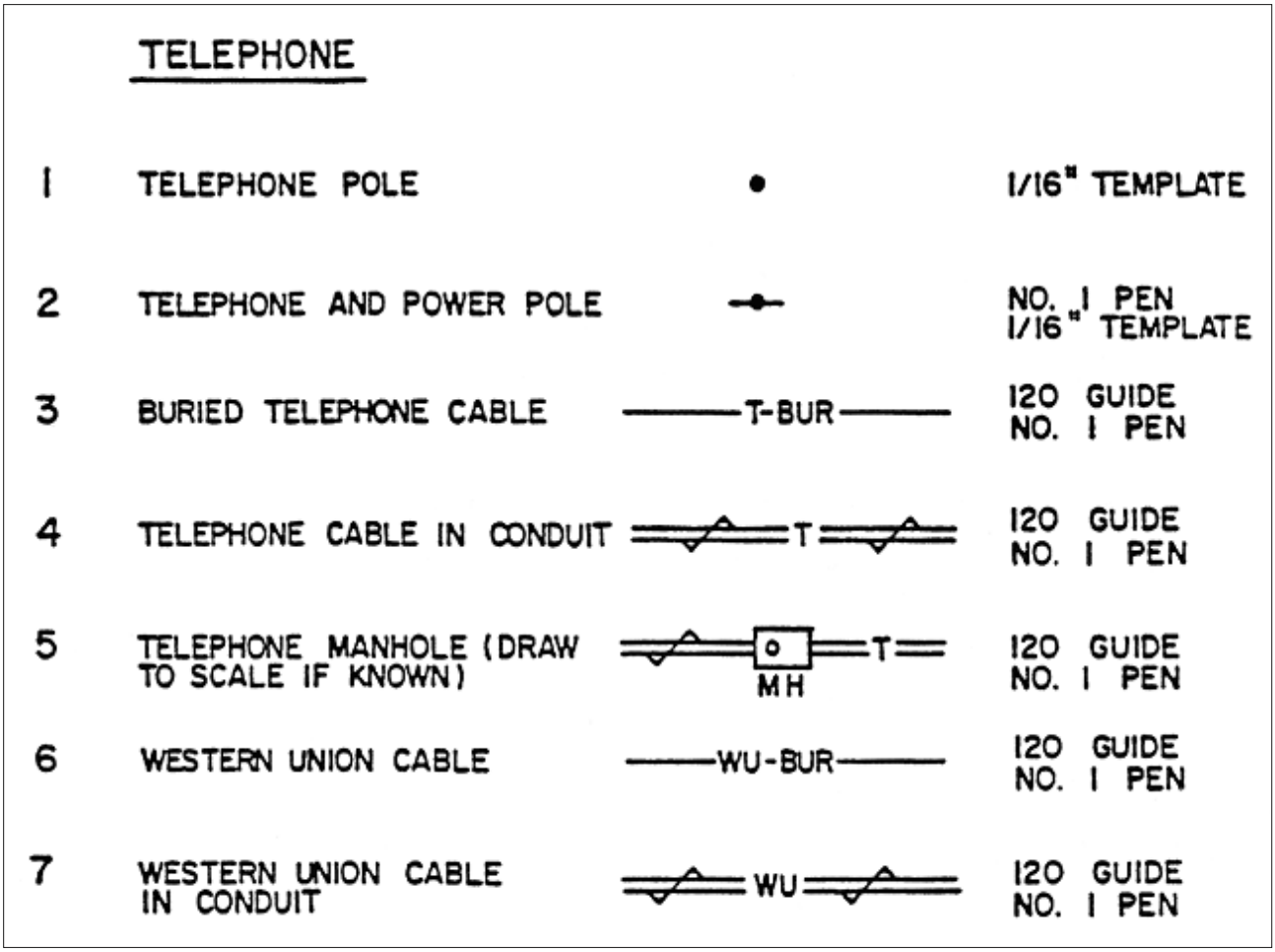

Figure 0-6: Technical Manual Symbols

350 ATCC Equipment Pad Layout

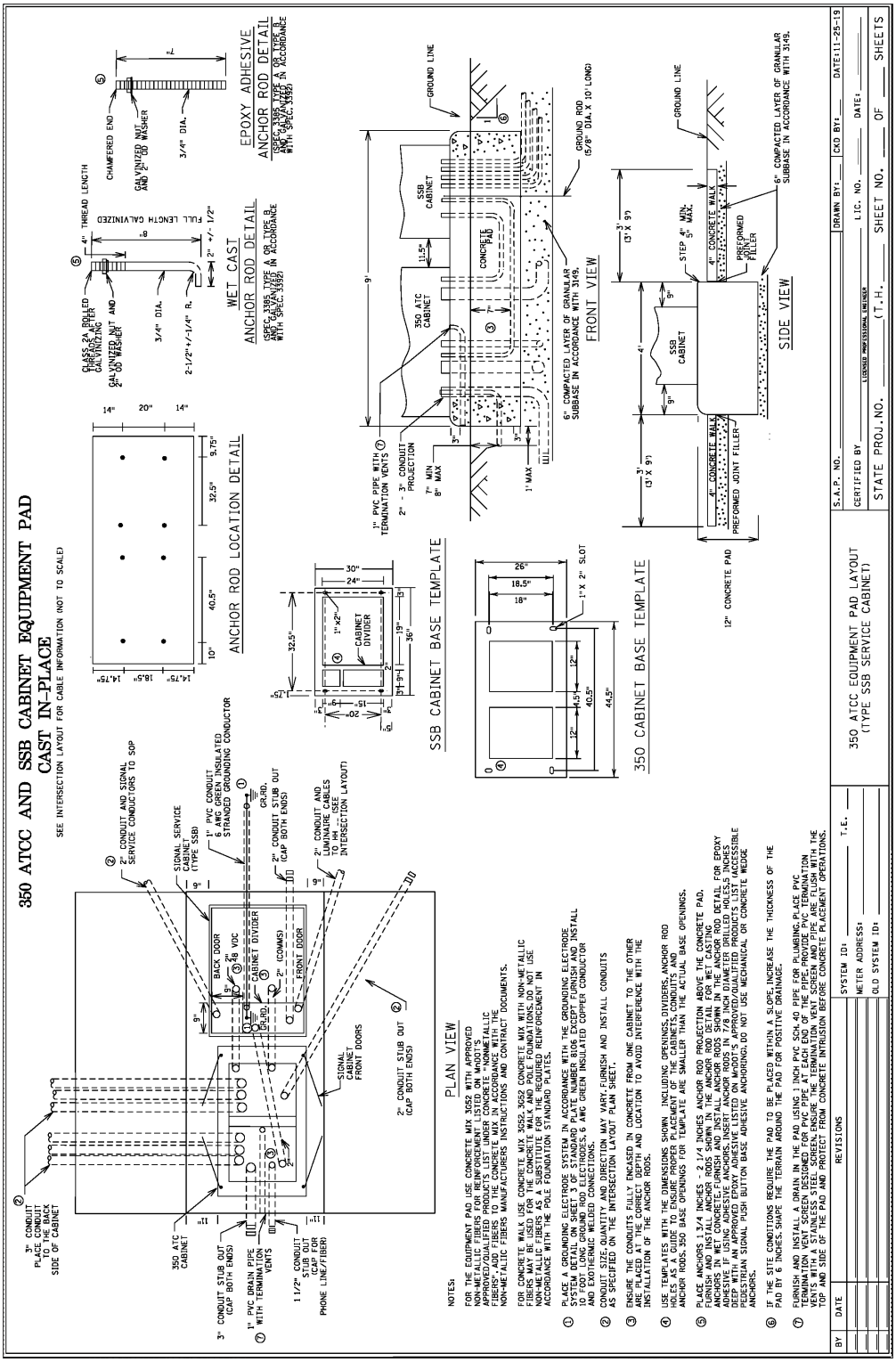

Figure 0-7: 350 ATCC Equipment Pad Layout Example

352 ATCC Equipment Pad Layout

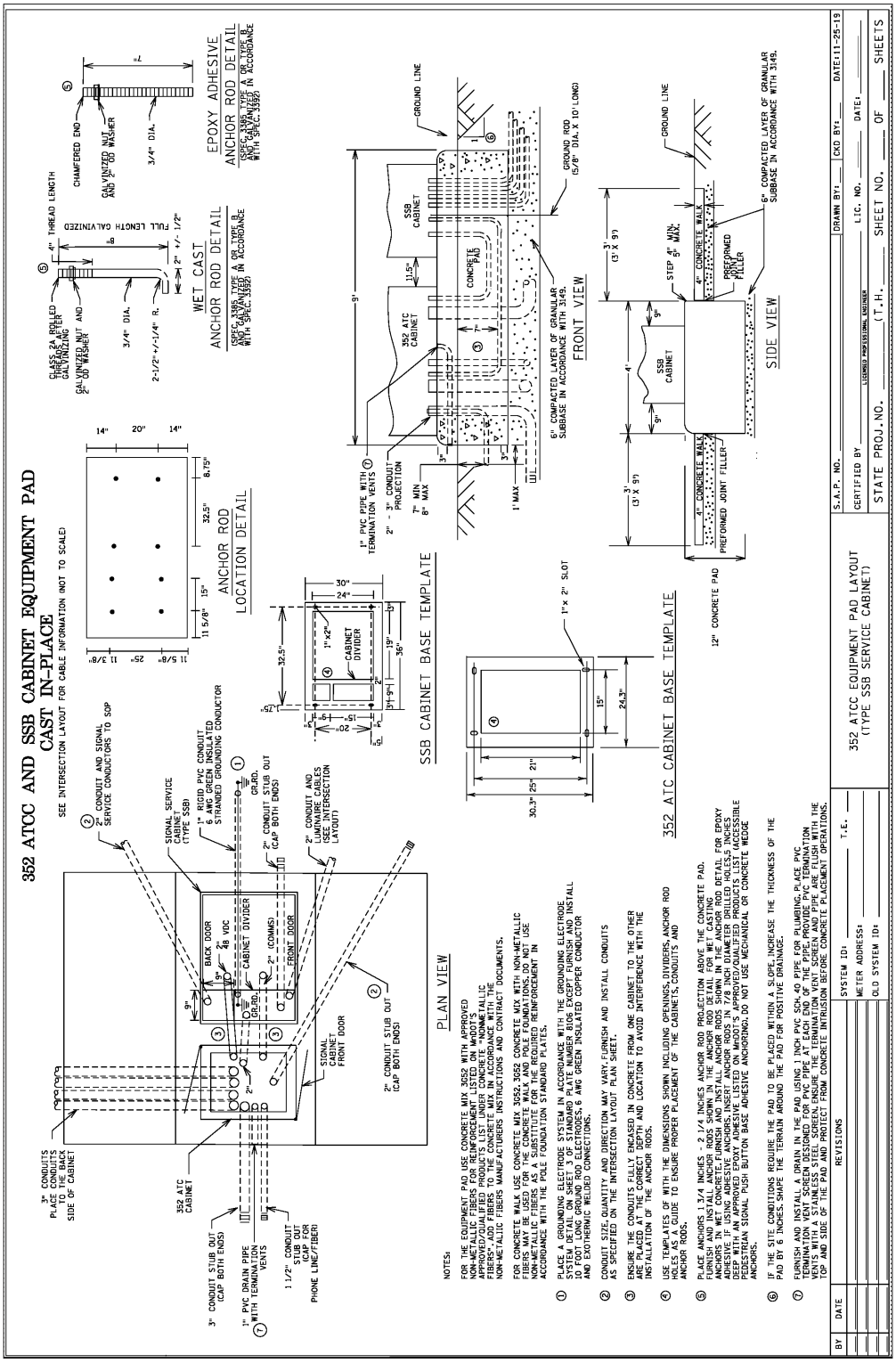

Figure 0-8: 352 ATCC Equipment Pad Layout Example

LOOP DETECTOR TEST REPORT

STATE PROJECT NO. _____

FEDERAL PROJECT NO. _____

INTERSECTION _____

LOCATION I.D. _____

LOOP DETECTOR NO.	DIMENSIONS IN FEET, LENGTH, WIDTH	NUMBER OF TURNS	CONTINUITY (IN OHMS)		INDUCTANCE MICROHENRIES	INSULATION RESISTANCE NEGOHMS
			AT LOOP	AT CABINET		

Figure 0-9: Loop Detector Hook Up Chart

Inspection Report

TP-02415-01 (1/03)

STATE OF MINNESOTA
DEPARTMENT OF TRANSPORTATION

Date _____
Auth. No _____
Order No _____
Maint. Dist. _____

Report No. _____
S.P. _____
Bridge No. _____
ETA No. _____
Contract No. _____
Invoice or Order No. _____

Inspection Report on _____

Supplier _____
Contractor _____
Engineer _____

Location _____
Destination _____
Consignee _____

Specification Designation	Description	Quantity		For Test Results See Laboratory No.
		Number	Units	
	Total			

Rejection and Reasons _____

Remarks _____

Signed _____
Inspector.

To Be Prepared :
White - For Engineer

Figure 0-10: Inspection Report

Form 2403

STATE OF MINNESOTA
DEPARTMENT OF TRANSPORTATION

INSPECTION REPORT
For Small Quantities

Report No.	
S.P.	
Bridge No.	
ETA No.	
Contract No.	

*Acceptance of Concrete requires specific tests as indicated in the Materials Control Schedule. Record all test results for each pour in the appropriate Concrete without proper test results will not be certified.

Contractor _____

Engineer _____

Specification Designation	Date	Material	Source	Quantity		Ticket or Invoice No.	Concrete Only*			Initial
				Number	Units		Air	Slump	Cyl.	

This is to certify that:
The listed materials used on the above project substantially met the pertinent specification requirements of the contract for small quantities and were accepted for their intended use on the basis of satisfactory performance for the purpose intended and visual inspection.

To Be Prepared :
White - For Engineer

Signed _____, Engineer

Figure 0-11: Inspection Report for Small Quantities (Form 2403)

Schedule of Materials Control for 2016 Standard Specifications

MnDOT SD-15 June, 2017 Schedule of Materials Control for 2018 Standard Specifications Page 65

XI. **Electrical, Roadway Lighting, and Traffic Control Signal Equipment Items**

Pay Item No.	Kind of Material	Spec. No.	Minimum Required Acceptance Testing (Field Testing Rate)	Minimum Required Sampling Rate for Laboratory Testing	Sample Size	Notes
2545	1. Light Poles (Aluminum, Steel, or Stainless Steel)	3811	Visual Inspection	None		The Fabricator shall submit "Certificate of Compliance", on a per project basis, to the Project Engineer.
2545 2550 2565	2. Hand Holes (Concrete Precast, PVC with Polymer Concrete Ring and Cover, and Polymer Concrete)	2545 2550 2565		None		**Form 02415 or 2403** Traffic control signals and roadway lighting projects require handholes (HH) and frames and covers to be listed on the MnDOT Approved/Qualified Products List (A/QPL) for signals. For precast concrete HH's and cast iron frame and cover: see VII.6, Drainage Castings and Standard Specifications for Construction 3819.2B
2545 2550 2565	3. Pulling Vaults and Splice Vaults (Polymer Concrete)	3820 3821	Visual Inspection - verify make and model number as shown on MnDOT's APL	None		**Form 02415 or 2403** Traffic control signals, roadway lighting projects, and traffic management systems require pulling vaults and splice vaults to be listed on MnDOT's Approved/Qualified Products List for Traffic Management Systems/ITS
2545 2550 2565	4. Underground Non Detectable Marking Tape	3806	Visual Inspection	None		Tape shall be labeled as required.
2545 2565	5. Foundation	2545	Slump as needed	1 cylinder per 20 m^3 (25 Cu. yd.)		Rebar is required in concrete foundations as specified in the Contract documents for all traffic control signals and roadway lighting projects.
2545 2565	6. Steel Screw In Foundations	2545 2565	Visual Inspection - verify make and model number as shown on MnDOT's APL	None		Steel Screw in Foundations are listed on MnDOT's Approved/Qualified Products List for Roadway Lighting & Signals
2402 2545 2565	7. Conduit and Fittings A. Metallic B. Liquid Tight Flexible Non Metallic Conduit C. PVC Coated Hot Dipped Galvanized Rigid Steel Conduit	3801 3802 3804 3805	Visual Inspection	None		**Form 02415 or 2403** Conduit shall be labeled as being listed by a National Recognized Testing Laboratory (NRTL). Retain Form 02415 or 2403 in Project File

Figure 0-12: Schedule of Materials Control

MnDOT SD-15 June, 2017 Schedule of Materials Control for 2018 Standard Specifications Page 66

XI. Electrical, Roadway Lighting, and Traffic Control Signal Equipment Items (cont.)

Pay Item No.	Kind of Material	Spec. No.	Minimum Required Acceptance Testing (Field Testing Rate)	Minimum Required Sampling Rate for Laboratory Testing	Sample Size	Notes
2545 2565	8. Conduit and Fittings D. Non-Metallic (Rigid and HDPE)	3803	Visual Inspection	None		**Form 02415 or 2403** Conduit shall be labeled as being listed by a National Recognized Testing Laboratory (NRTL). Retain Form 02415 or 2403 in Project File. For traffic control signals and roadway lighting projects, specific requirements are contained in the Special Provisions for each project.
2545 2565	9a. Anchor bolts (cast in place)	2545 2565				See section VII, 7.
2545	9b. Anchorages (Drilled In)	2545				See section VII, 9.
2545 2565	10. Anti-Seize and Lubricating Compound (Bridge Grease)	3842	Visual Inspection - verify product is as listed on MnDOT's APL	None		Traffic control signals, roadway lighting projects, require Anti-Seize Compound to be listed on MnDOT's Approved/Qualified Products List for Bridge
2545 2565	11. Anti-Oxidant Joint Compound	3843	Visual Inspection	None		Traffic control signals, roadway lighting projects, require Anti-Oxidant Compound be used on grounding connections.
2545 2565	12. Miscellaneous Hardware	2545 2565	Visual Inspection	Sample critical items only. One of each item per shipment. (Critical Items are load bearing, structurally necessary items.)		Will carry "Inspected" tag if sampled and tested prior to shipment. No sample necessary if "Inspected". Do not use if not tested. Field sample at sampling rate for laboratory testing. For traffic control signals and roadway light lighting projects, various miscellaneous hardware is required to be listed on the MnDOT Signals and Lighting Approved/Qualified Products Lists. The Contract documents indicate which items must be on the Signals and/or Lighting APL.

Figure 0-13: Schedule of Materials Control (Continued)

MnDOT SD-15 June, 2017 (Rev. Nov., 2017) Schedule of Materials Control for 2018 Standard Specifications Page 67

XI. Electrical, Roadway Lighting, and Traffic Control Signal Equipment Items (cont.)

Pay Item No.	Kind of Material	Spec. No.	Minimum Required Acceptance Testing (Field Testing Rate)	Minimum Required Sampling Rate for Laboratory Testing	Sample Size	Notes
2545 2550 2565	13. Cable and Conductors A. Service, Feeder, and Branch Circuit Conductors Roadway Loop Detector Conductors (No Tubing) Underground Service Entrance (USE) cables	3815.2B1 3815.2B2	Visual Inspection	None		**Form 02415 or 2403** Make certain the conductors are the type specified. Submit Field Inspection report showing type and quantities used. Shall be labeled as being listed by a National Recognized Testing Laboratory (NRTL) and type where applicable.
2545 2550 2565	13. Cable and Conductors B. Electrical Cables and Single Conductors with Jacket	3815.2B2(b) 3815.2B3 3815.2B5 3815.2C1 3815.2C3 3815.2C4 3815.2C5 3815.2C6 3815.2C7 3815.2C8 3815.2C14	Visual Inspection	1 sample per size per lot	1.5m (5 ft.)	**Form 02415 or 2403** Usually inspected at the distributor. Documentation showing project number, reel number(s), and MnDOT test number(s) will be included with each project shipment. If such documentation is not received from Contractor, submit sample for testing along with material certification from manufacturer. Do not use if not tested. Pre-inspected materials will not be tagged; an inspection report will be sent by the MnDOT inspector for each shipment. Project inspectors should verify that the shipping documents agree with this inspection report. Call Steve Grover at 651-366-5540 or Cindy Schellack at 651-366-5543 with questions. For traffic control signals and roadway lighting projects, the Special Provisions for each project contain electrical cable and conductor specifications.
2545 2550 2565	13. Cable and Conductors C. Fiber Optic Cables	3815.2C13	Visual Inspection - verify make and model number as shown in Special Provisions	None		**Form 02415 or 2403** Fiber optic cables shall be listed on the MnDOT Approved/Qualified Products List for Traffic Management Systems/ITS.

Figure 0-14: Schedule of Materials Control (Continued)

MnDOT SD-15 June, 2017 (Rev. Nov., 2017) Schedule of Materials Control for 2018 Standard Specifications Page 68

XI. Electrical, Roadway Lighting, and Traffic Control Signal Equipment Items (cont.)

Pay Item No.	Kind of Material	Spec. No.	Minimum Required Acceptance Testing (Field Testing Rate)	Minimum Required Sampling Rate for Laboratory Testing	Sample Size	Notes
2545 2565	14. Grounding Electrodes (Ground Rods) (Plate Electrodes)	2545 2565 3818	Visual Inspection	None.		**Form 02415 or 2403** Retain Form 02415 or 2403 in project file. Shall be labeled as being listed by a National Recognized Testing Laboratory (NRTL).
2545	15. Luminaires and Lamps	3810				**Form 02415 or 2403** Traffic control signals and roadway lighting projects require luminaries and lamps to be listed on the MnDOT Approved/Qualified Products List for Lighting. The conductors shall be labeled as being listed by a National Recognized Testing Laboratory (NRTL) and type, where applicable.
2545	16. Air Obstruction Lights	3816	Visual Inspection - verify make and model number as shown on MnDOT's APL	None.		Air Obstruction Lights are listed on MnDOT's Approved/Qualified Products List for Roadway Lighting.
2545	17. Navigation Lanterns	3817	Visual Inspection - verify make and model number as shown on MnDOT's APL	None.		Navigation Lanterns are listed on MnDOT's Approved/Qualified Products List for Roadway Lighting.
2545 2565	18. Sponge Rubber Expansion Joint. Used for wrapping expansion and deflection/expansion conduit joints on bridges.	3841	Visual Inspection			
2545	19. Lighting System	2545				Lighting Systems are to be reported as a "System" using the "Lighting, Signal, and Traffic Recorder Inspection Report". To be certified by the Project Engineer.
2545	20. Electrical Systems					Electrical Systems are to be reported as a "System" using the "Lighting, Signal, and Traffic Recorder Inspection Report". To be certified by the Project Engineer.
2565	21. Traffic Control Signal Systems	2565				Traffic Control Signal Systems are to be reported as a "System" using the "Lighting, Signal, and Traffic Recorder Inspection Report". To be certified by the Project Engineer.

Figure 0-15: Schedule of Materials Control (Continued)

Contractor Certification of Disposal

Contractor Certification of Disposal

Project No.:_____ **Location:** _____

We, _____, hereby certify that the mast arm pole
(Name of Contractor)

standards were rendered unusable, and the mast arm pole standards, and if applicable, pedestal shafts and bases were transported and disposed of in accordance with all requirements of the Minnesota Pollution Control Agency (MPCA) and the Occupational Safety & Health Administration (OSHA) for the removal, transporting, and disposal of hazardous waste.

_____ _____
SIGNATURE **DATE**

After signed and dated, the Contractor shall submit this form to the Mn/DOT project Engineer. The Contractor shall also submit to the Engineer a copy of the "Tipping Receipt" that the Contractor receives from the scrap yard or recycler.

Figure 0-16: Contractor Certification of Disposal Form

UPS Hook UP Chart

Myers 2010 Cabinet & Alpha Model FXM 1100 UPS Hook Up Chart						
8/25/2010	ASC 3 running data base 3881 or above					
Alpha Model **FXM 1100** Terminal	6 Pair #19 Conductor Color	Loop Interface Termination Point	Signal Cabinet Termination Point			
None	~~White/Orange Pair **Orange**~~	815	D 2	UPS Watchdog Fail	Alarm 4	
None	~~White/Orange Pair **White**~~	814	Logic Ground			
Low Batt Relay **C2** Normally Open	White/Green Pair **Green**	813	D 1	Battery Back Up Batteries Low	Alarm 3	
Low Batt Relay **C2** Common	White/Green Pair **White**	812	Logic Ground			
On Batt Relay **C1** Normally Open	White/Blue Pair **Blue**	811	C 15	Running on Battery Back Up	Alarm 2	
On Batt Relay **C1** Common	White/Blue Pair **White**	810	Logic Ground			
Timer Relay **C4** Normally Open	White/Brown Pair **Brown**	809	C 12	BBU Commanded Flash		
Timer Relay **C4** Common	White/Brown Pair **White**	808	Logic Ground			

Figure 0-17: ALPHA UPS Hook Up Chart

Meyers NEMA Cabinet Hook Up Chart

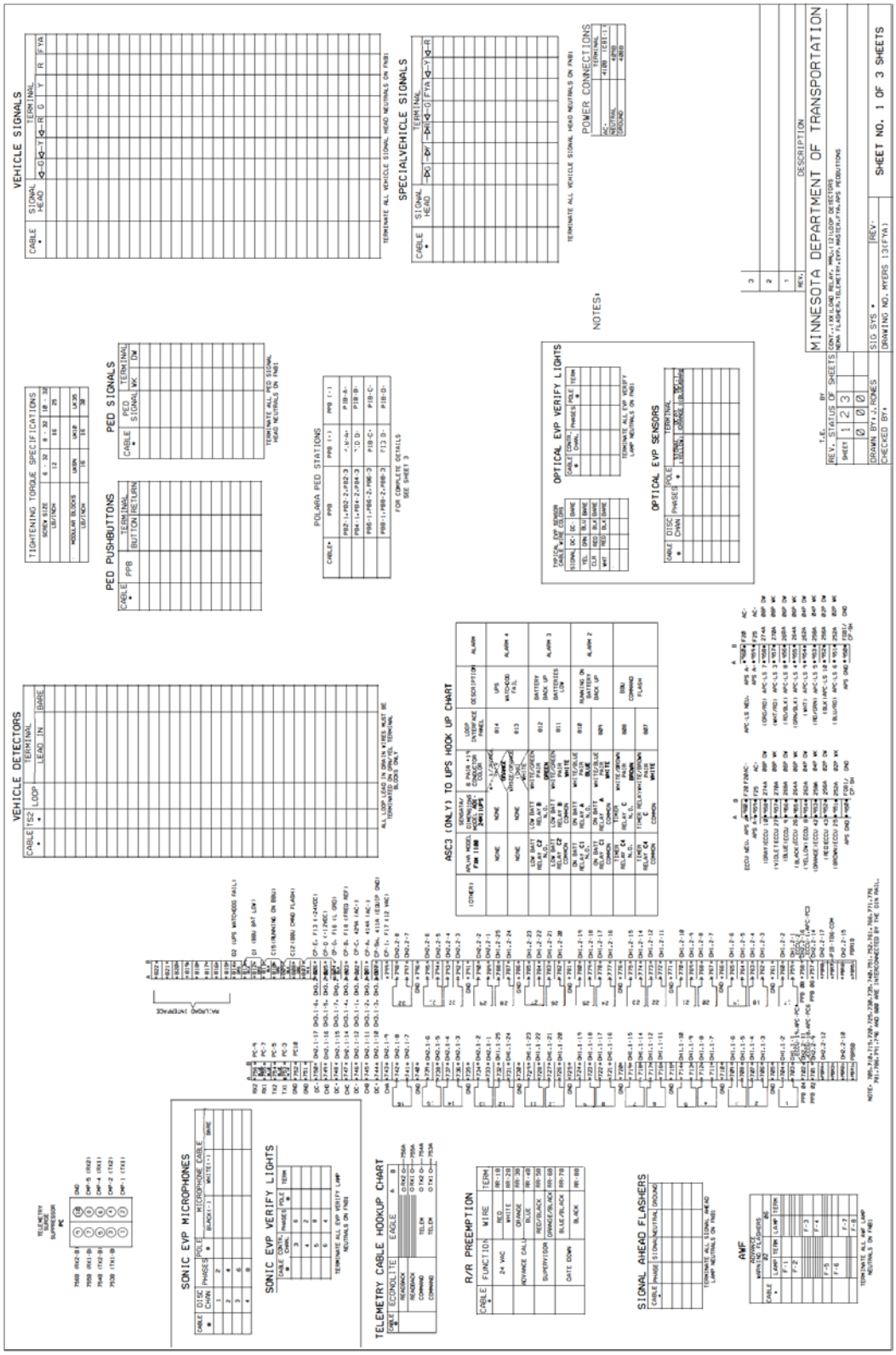

Figure 0-18: NEMA Cabinet Hook Up Chart

MnDOT Traffic Signal Controller Input Alarms

ASC3 Controller, MnDOT Data Base N3883

Alarm 1 – Door Open.

Alarm 2 – Running on Battery Backup.

Alarm 3 – Battery Backup Batteries Low.

Alarm 4 – UPS Watch Dog Fail (Battery Back Up System UPS).

Alarm 5 – Signal Cabinet Transient Suppression Fail.

Alarm 6 – Undefined.

Alarm 7 – Undefined.

Alarm 8 - Undefined

Structural Details for Signal Mast Arm Mounted Signs

TYPICAL MAST ARM SIGN MOUNTING

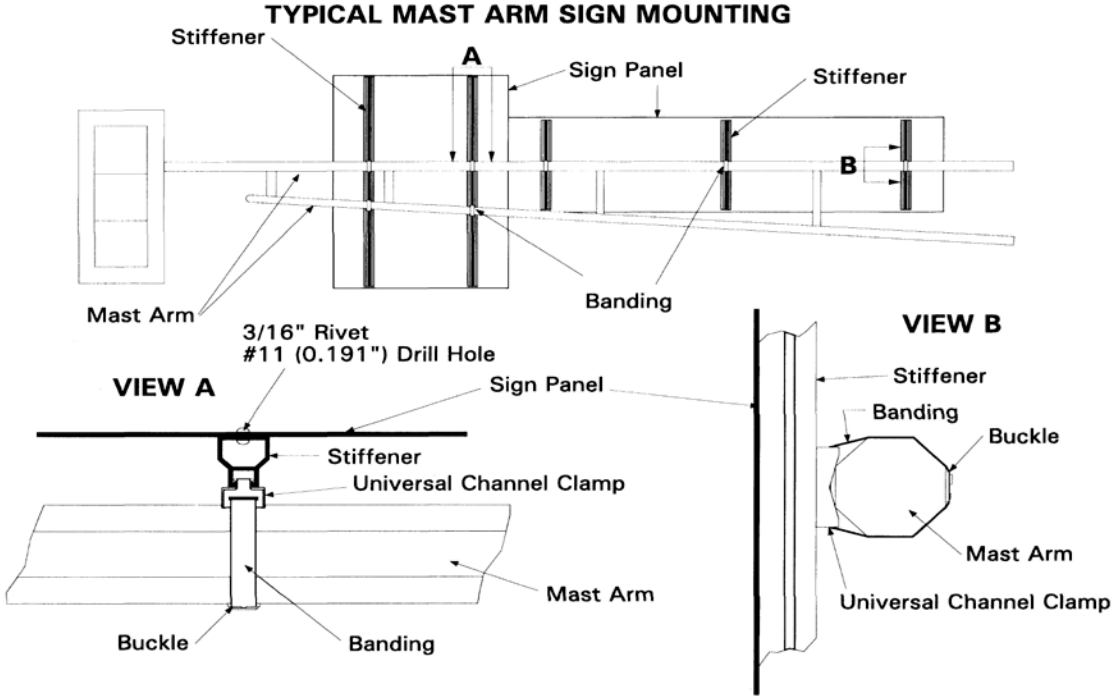

STIFFENER (LARGE CHANNEL EXTRUSION) REQUIREMENT TABLE

(Based on Sign Panel Dimensions in Feet)
(Where sign panel dimensions fall between one foot increments use the next highest foot length and/or height)

Height \ Length	2	3	4	5	6	7	8	9	10	11	12	13	14
2	2	2	2	3	3	3	4	4	4	5	5	5	5
3	2	2	2	3	3	3	4	4	5	5	5	5	5
4	2	2	2	3	3	3	4	4	5	5	5	5	6
5	2	2	2	3	4	4	5	5	5	5	5	5	6
6	X	X	2	3	4	4	5	5	5	5	5	5	6
7	X	X	X	4	4	5	5	5	5	5	5	5	6

NOTES:
1. Signs shall be affixed to upper and lower mast arm chords whenever possible.
2. Position bottom of sign panel 17' minimum above centerline elevation.
3. Sign panels shall be mounted plumb. Shim as required.
4. Horizontal spacing between stiffeners shall not exceed 36".
5. Horizontal inset from panel edge to stiffener shall not exceed 12".
6. Vertical inset from panel edge to stiffener shall be 0" to 0.5".
7. Rivets attaching stiffeners to sign panels shall be installed 1", on center, from the top and bottom of the panel, and then spaced no more than 6" on center.
8. Banding straps shall be 0.75" x 0.030" Type 201 (1/4 Hard) stainless steel. Banding buckles shall be Type 201 (1/4 Hard) stainless steel. Two banding straps, each with a banding buckle, shall be single-wrapped around the mast arm, clipped and tightened independently in accordance with the manufacturer's instructions. The second strap shall be installed directly over the first strap.

APPROVED	DATE OF REV.	STRUCTURAL DETAILS FOR SIGNAL MAST ARM MOUNTED SIGNS		PAGE NUMBER
8/9/02	7/6/07			105A

Figure 0-19: Structural Details for Signal Mast Arm Mounted Signs

Electric Service Information Form for Traffic Control Signal Systems

Electric Service Information Form For Traffic Control Signal Systems

Project Number: _____ Contractor: _____

Date: _____

MN/DOT Signal System ID	Intersection	Meter Address	Transformer Primary Fuse Size and Type	Electric Utility Transformer Size In KVA	Transformer Internal Impedance Z in Percent	Transformer Secondary Voltage Line to Line and Line to Neutral	Size of Conductors In American Wire Gauge (AWG)	Length of conductors in feet from transformer connection to meter socket connection.			Calculated Available Fault Current at the line Side of the Meter Socket	Service Cabinet Main Circuit Breaker Size in AMPS
								L1 =	L2 =	Neutral		
								L1 =	L2 =	Neutral		
								L1 =	L2 =	Neutral		
								L1 =	L2 =	Neutral		
								L1 =	L2 =	Neutral		

NEC Article 110.24

Figure 0-20: Electrical Service Information Form for Traffic Control Signal Systems

Electric Service Information Form for Lighting Systems

Electric Service Information Form For Roadway Lighting Systems

Project Number: Contractor:

Date:

System	MN/DOT Feed Point Number	Meter Address	Transformer Primary Fuse Size and Type	Electric Utility Transformer Size In KVA	Transformer Internal Impedance Z in Percent	Transformer Secondary Voltage Line to Line and Line to Neutral	Size of Conductors In American Wire Gauge (AWG)	Length of conductors in feet from transformer connection to meter socket connection.			Calculated Available Fault Current at the line Side of the Meter Socket	Service Cabinet Main Circuit Breaker Size in AMPS
								L1 =	L2 =	Neutral		
								L1 =	L2 =	Neutral		
								L1 =	L2 =	Neutral		
								L1 =	L2 =	Neutral		
								L1 =	L2 =	Neutral		

NEC Article 110.24

Figure 0-21: Electric Service Information Form for Lighting Systems

Valmont Frangible Base Installation Guidelines

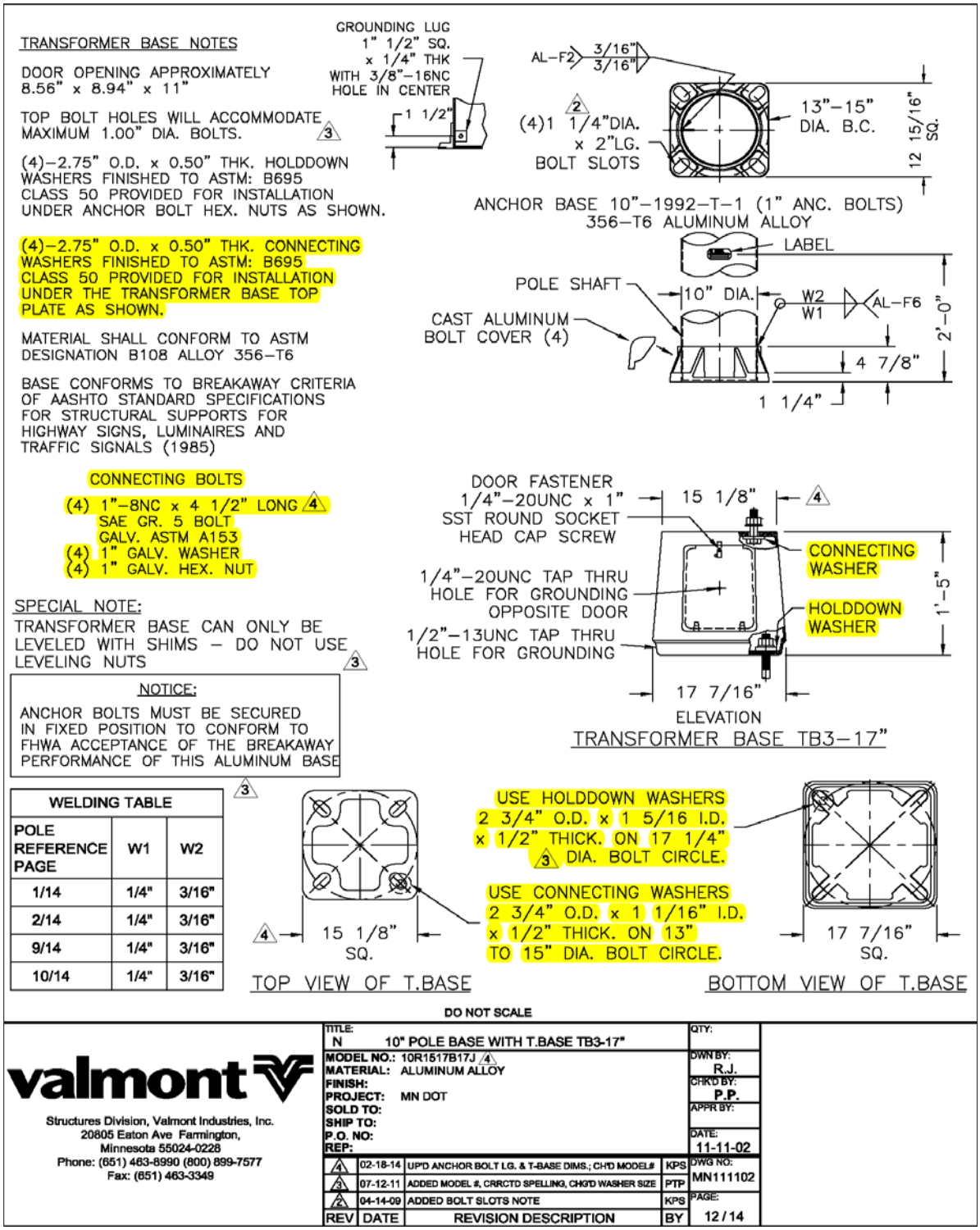

Figure 0-22: Plan Sheet for 10" Pole Base with T Base

Millerbernd Installation Instructions Design E

REVISIONS			
REV.	DESCRIPTION	DATE	DRAFTER
A	UPDATED TITLE BLOCK	11/20/2017	RK
B	REMOVED 1/2" FLAT WASHER	12/21/2018	RK

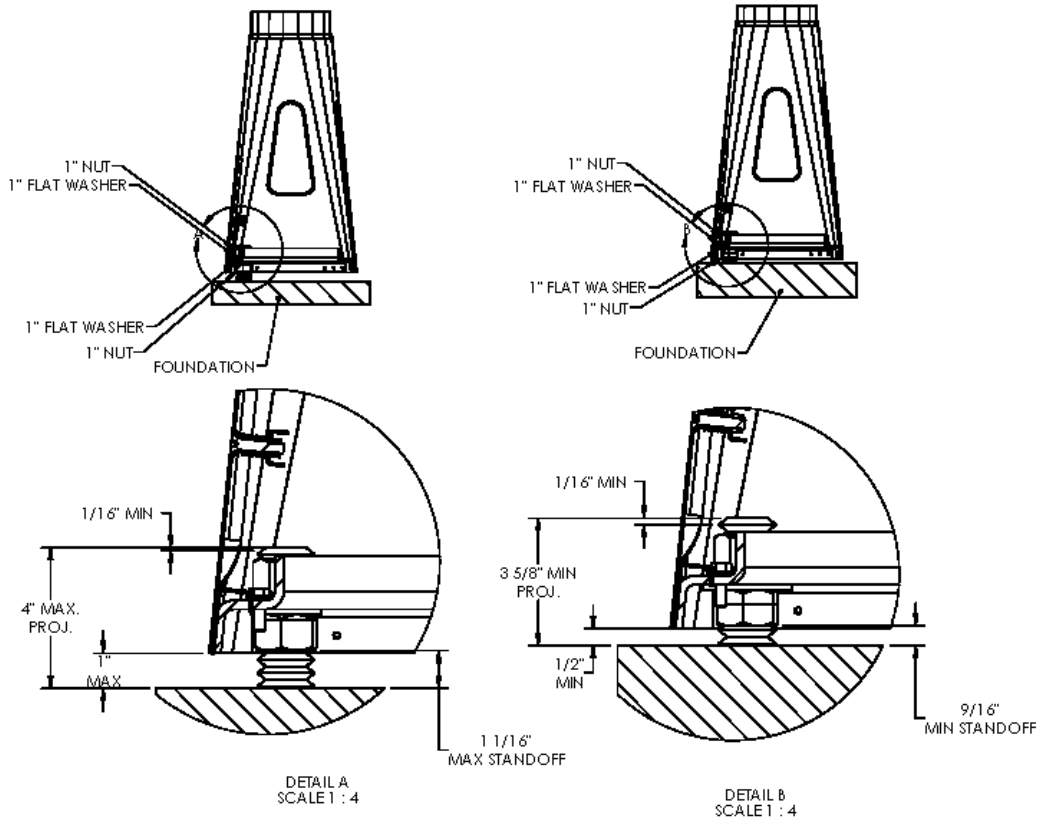

INSTALLATION STEPS

1. INSTALL POLE BASE ON FOUNDATION WITH HARDWARE AS SHOWN - KEEP LEVELING NUTS AT SAME ELEVATION
2. SNUG TIGHTEN LOWER LEVELING NUT
3. SNUG TIGHTEN TOP LOCK NUT
4. TIGHTEN ANCHOR RODS IN ACCORDANCE WITH MNDOT CONTRACT DOCUMENTS

RECOMMENDED TOOLS

- 1 5/8" SOCKET WITH 12" RATCHET
- SLUG WRENCH OR OPEN END WRENCH TO FIT 1" HEX NUTS
- ANGLED WRENCH TO SNUG TIGHTEN LEVELING NUTS

SALES ORDER NUMBER:		MILLERBERND 622 6TH ST. SO. WINSTED, MN 55395	
DWN: REBEKAH	DATE: 3/30/16		
CHK BY:	DATE:	DESCRIPTION: DESIGN E STAINLESS STEEL 15" BC 1" ANCHOR RODS	
MATERIAL: SEE BOM			
WEIGHT:	SURFACE AREA:	SCALE: 1:24	DRWG NO: DESIGN E / SHEET 1 OF 1 / A

Figure 0-23: Design E Base Sheet

Millerbernd Installation Instructions Design H

REVISIONS			
REV.	DESCRIPTION	DATE	DRAFTER
A	UPDATED TITLE BLOCK	11/20/2017	RK
B	REVISED NOTES	12/21/2018	RK

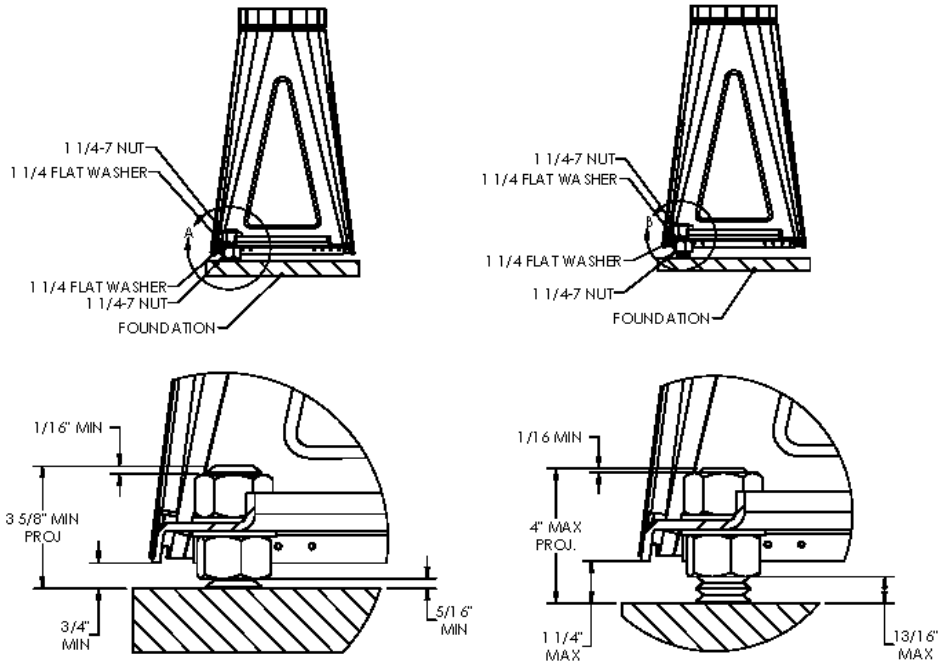

DETAIL A
SCALE 1 : 4

DETAIL B
SCALE 1 : 4

INSTALLATION STEPS

1. INSTALL POLE BASE ON FOUNDATION WITH HARDWARE AS SHOWN KEEPING LEVELING NUTS AT SAME ELEVATION
2. SNUG TIGHTEN LOWER LEVELING NUT
3. SNUG TIGHTEN TOP LOCK NUT
4. TIGHTEN ANCHOR RODS IN ACCORDANCE WITH MNDOT CONTRACT DOCUMENTS

RECOMMENDED TOOLS

- 2" SOCKET WITH 12" RATCHET
- SLUG WRNECH OR OPEN END WRENCH TO FIT 1 1/4" HEX NUTS

SALES ORDER NUMBER:		MILLERBERND 622 6TH ST. SO. WINSTED, MN 55395	
DWN: REBEKAH	DATE: 3/30/16		
CHK BY:	DATE:	DESCRIPTION: DESIGN H STANLESS STEEL 17" DIA BC 1 1/4" ANCHOR RODS	
MATERIAL: SEE BOM			
WEIGHT:	SURFACE AREA:	SCALE: 1:24	DRWG NO: DESIGN H	SHEET 1 OF 1	A

Figure 0-24: Design H Base Sheet

Steel Screw-In Light Foundations Design E & H Sheet

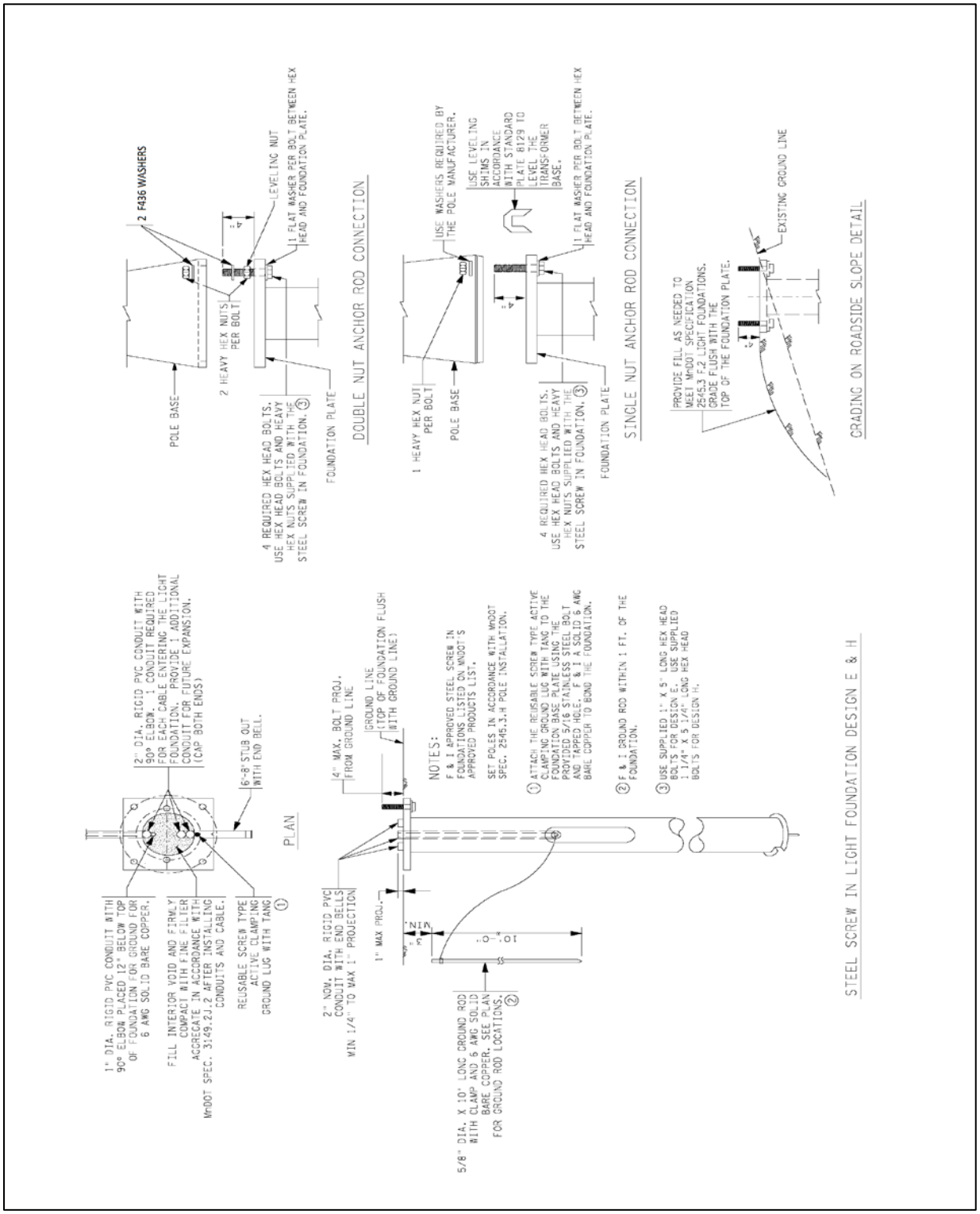

Figure 0-25: Design Steel E & H Installation Detail Sheet

Steel Screw-In Light Foundation Design P Sheet

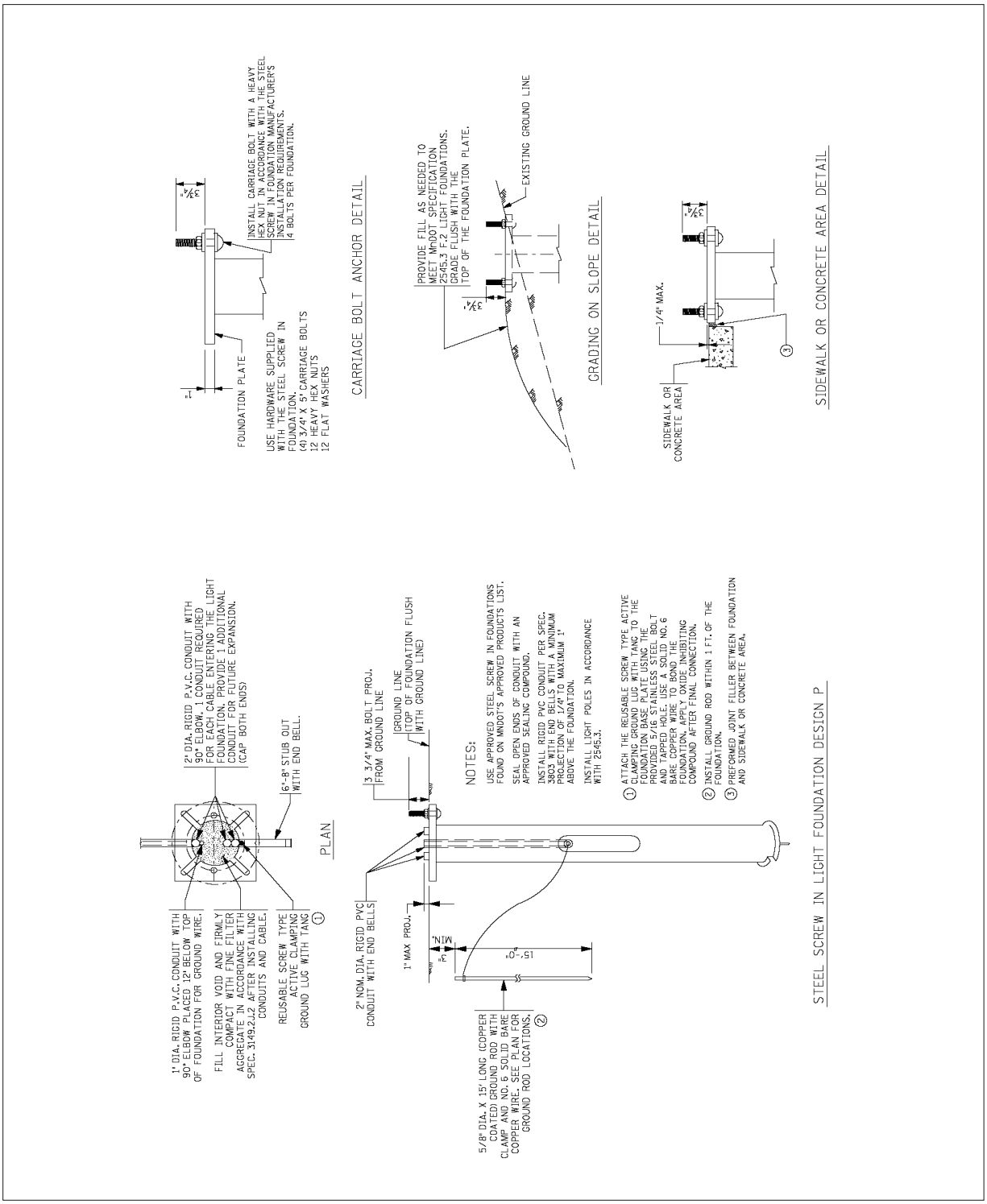

Figure 0-26: Steel Screw-In Light Foundation Design P Sheet

Installation Instructions – D Series LED Wall Accessories

Installation Instructions
D-Series LED Wall Accessories

5 year limited warranty

DELIVERY: Upon receipt of fixture and accessories (packed separately), thoroughly inspect for any freight damage. All damage should be reported to the delivery carrier. Compare the catalog description listed on the packing slip with the fixture label on the inside of the housing to be sure you have received the correct merchandise.

This device complies with Part 15 of the FCC Rules. Operation is subject to the following two conditions: (1) this device may not cause harmful interference, and (2) this device must accept any interference received, including interference that may cause undesired operation.

Installing D-Series Size 1 LED Wall Bird Spikes (if the full length of the spike assembly is not desired, sections can be removed prior to assembly by snapping sections off.)

1. Remove the screws (2 for the DSXW1 & 4 for the DSXW2) that holds the light fixture electrical cover in place. Then remove the cover assembly by disconnecting the quick disconnects. The spike assembly will be installed using the provided self drilling screws.

2. Remove the paper backing from one side of the provided gasket and apply the gasket to the spike assembly.

3. Remove the paper backing from the remaining side of the gasket.

4. Select the spike assembly location so that the self drilling screws do not damage the fixture electricals.

5. Press the spike assembly onto your selected location and attach with the self drilling screws.

6. Snap the quick disconnects back together. Reinstall the cover taking care not to pinch any wires.

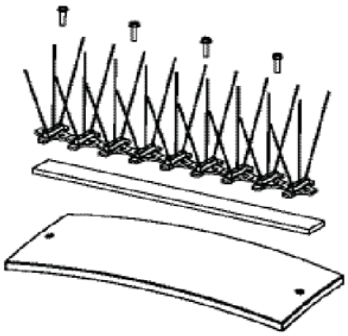

Installing D-Series Size 1 LED Wall Houseside Shields

1) Remove the screws shown in picture from the light engine and discard.

2) Place a House-side shield on the light engine and align the holes on the shield with the holes on the light engine.

3) Assemble the shield to the light engine using the supplied screws.

4) Repeat steps 1-3 as needed.

LITHONIA LIGHTING
An Acuity Brands Company

Lithonia Lighting Outdoor • One Lithonia Way • Conyers, Georgia 30012
Phone: 800-279-8041 • Fax: 770.918.1209 • www.lithonia.com
© 2011 Acuity Brands Lighting, Inc. All rights reserved.

Part Number:
RJ521369 Rev A
Revision Date: 7/13/14

Figure 0-27: Installation Instructions – D Series LED Wall Accessories

11SA 2 ½" Saddle Adapter

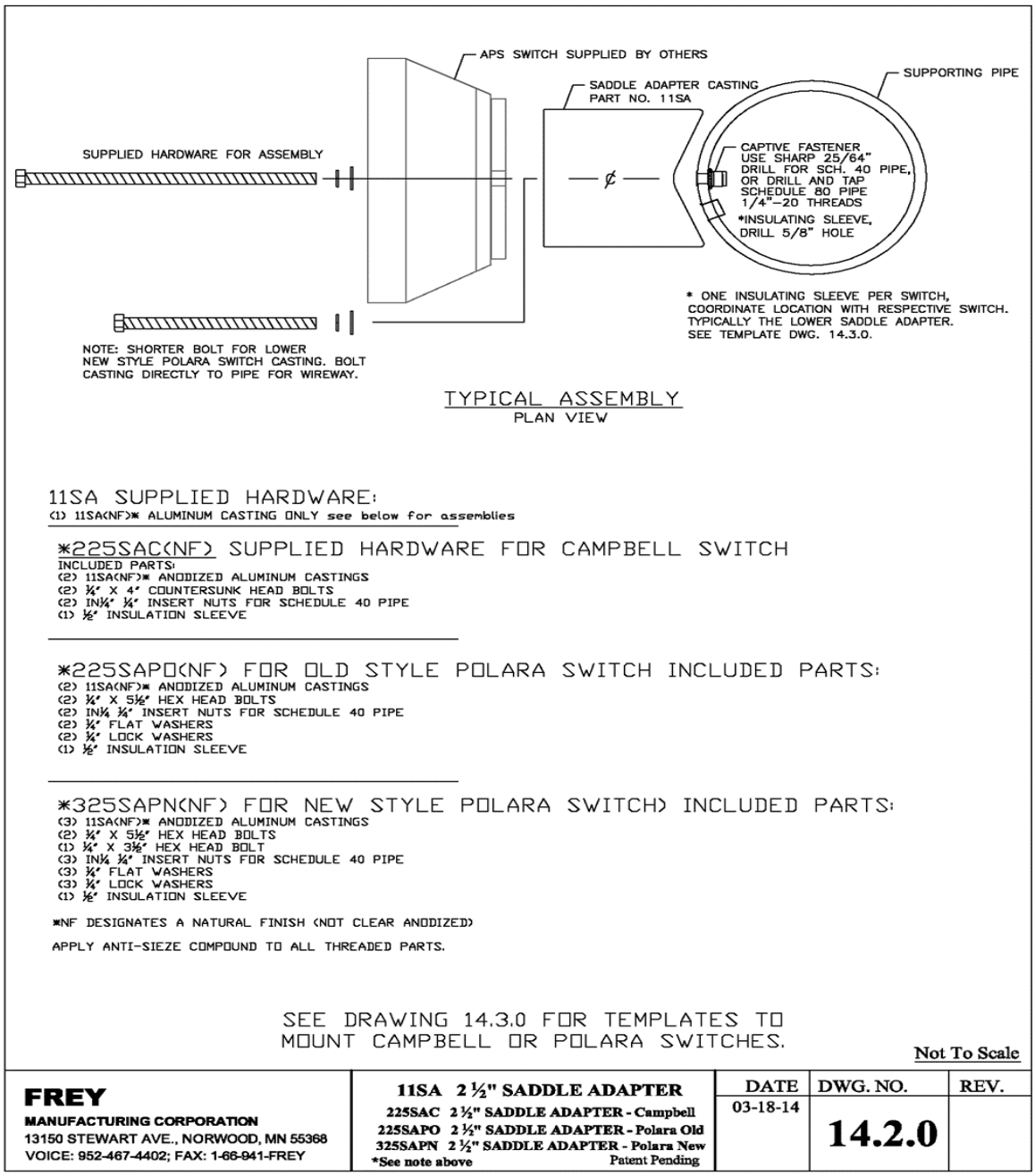

Figure 0-28: 11SA 2 ½" Saddle Adaptor

Saddle Adapter APS Hole Templates

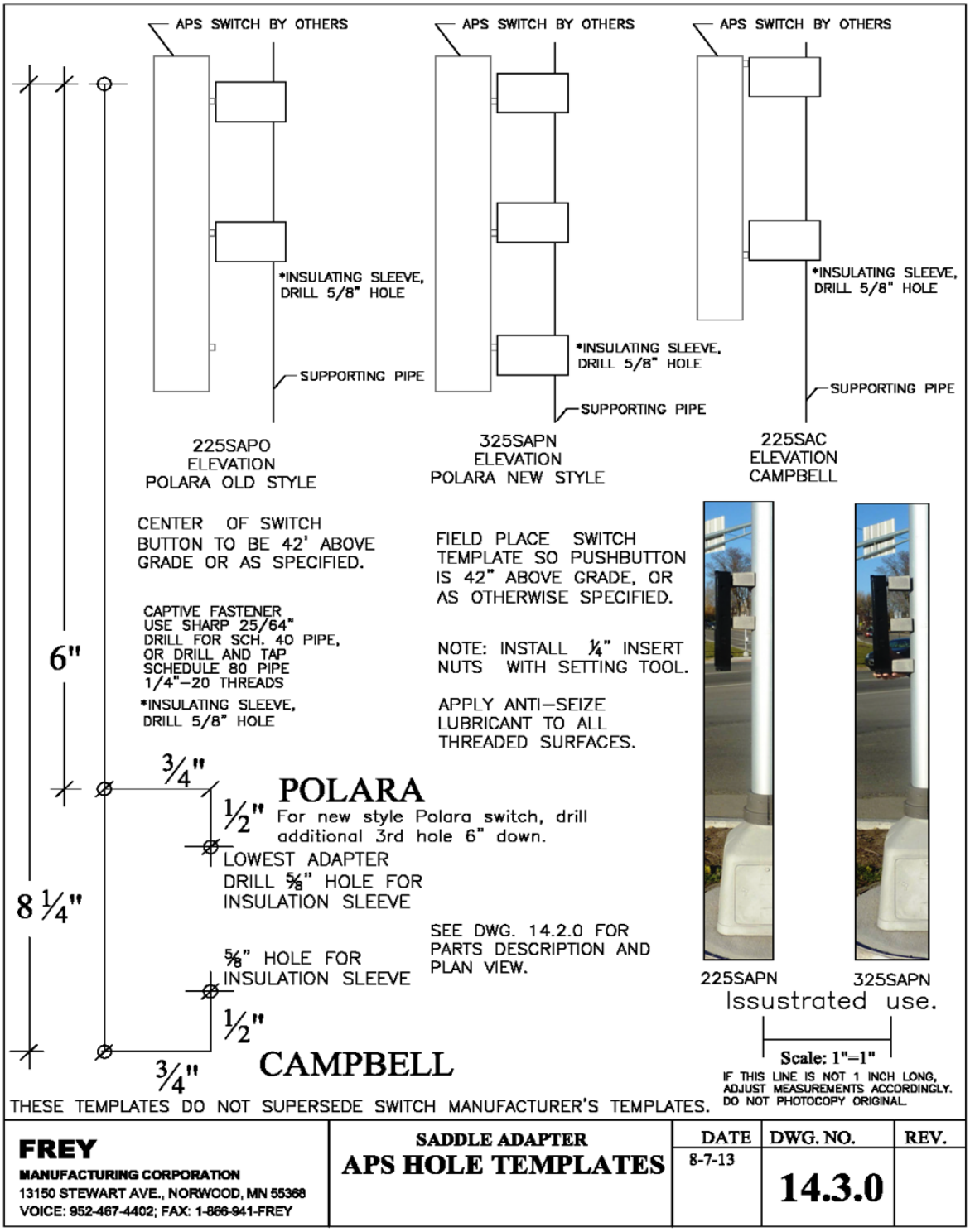

Figure 0-29: Saddle Adapter APS Hole Templates

Locating Responsibility Form

Locating Responsibility Form

Job S.P. Number _____

Job Type _____

Start Date _____

End Date _____

T.H. _____

Location _____

Lighting/ Signal Inspector _____

Contractor _____

Contractor (24 Hour Contact) _____

Project Manager _____

Phone Number _____

Fax Number _____

Email _____

Electrician _____

Phone Number _____

Locator Area _____

Project Engineer _____

Phone Number _____

Chief Inspector _____

Phone Number _____

Weekly Meeting _____

Anchor Rod Tightening
Torque and Turns Guide
MnDOT Traffic Signal and Light Pole

LIGHT POLES (pg.1)

Pole Type	Anchor Rod Φ (in)	Rod Type (galvanized to Spec. 3392)	Base Plate Thickness (in)	Using Torque Wrenches Manual and Hydraulic			Using Standard Wrenches: Combination, Socket, Structural, or Open Jaw Slugging Wrenches	
				Snug Torque (ft-lbs)	Verification Torque, Tv (ft-lbs)	Re-tightening Torque1 Tr 48 Hours After	Snug Tight Wrench Length (in)	Final Nut Rotation Beyond Snug
Pedestrian Walkway Light Poles on Steel Screw-In Foundations	3/4 *(Steel Screw-In Foundation Installation)	ASTM A325 10 UNC Hex Head Bolt	3/8 1/2 5/8 3/4	23	138	152	≤ 12 Pull with one arm	1/12 1/12 1/6 1/6
Pedestrian Walkway Light Poles	3/4	Type A Grade 36 Spec. 3385.2.A	3/8 1/2 5/8 3/4	9	45	50	≤ 12 Pull with one arm	1/3 1/3 1/2 1/2
		Type B Grade 55 Spec. 3385.2.B		15	80	80		
40' Stainless Steel Light Poles	1	Type B Grade 55 Spec. 3385.2.B	1/4	33	200	220	≤ 12 Pull with one arm	1/18
40' Stainless Steel Light Poles on Steel Screw-In Foundations	1 *(Steel Screw-In Foundations)	ASTM A325 8 UNC Hex Head Bolt	1/4	56	335	368	≤ 12 Pull with one arm	1/12
Barrier Galvanized Steel Light Poles	1	Type B Grade 55 Spec. 3385.2.B	1	33	200	220	≤ 12 Pull with one arm	1/12
Barrier Galvanized Steel Light Poles	1	Type C Grade 105 Spec. 3385.2.C	1	64	382	420	≤ 12 Pull with one arm	1/6

1

Figure 0-30: Anchor Rod Tightening Guide Page 1

Anchor Rod Tightening
Torque and Turns Guide
MnDOT Traffic Signal and Light Pole

LIGHT POLES (pg.2)

Pole Type	Anchor Rod Φ (in)	Rod Type (galvanized to Spec. 3392)	Base Plate Thickness (in)	Using Torque Wrenches Manual and Hydraulic			Using Standard Wrenches: Combination, Socket, Structural, or Open Jaw Slugging Wrenches	
				Snug Torque (ft-lbs)	Verification Torque, Tv (ft-lbs)	Re-tightening Torque, Tr 48 Hours After Tightening	Snug Tight Wrench Length (in)	Final Nut Rotation Beyond Snug
50' Stainless Steel Light Poles	1-1/4	Type B Grade 55 Spec. 3385.2B	1/4	67	400	440	≤ 12 Pull with one arm	1/18
50' Stainless Steel Light Poles on Steel Screw-In Foundations	1-1/4 *(Steel Screw-In Foundations)	ASTM A325 7UNC Hex Head Bolt	1/4	98	589	648	≤ 12 Pull with one arm	1/18
High Mast Light Towers	2	Type C Grade 105 Spec. 3385.2.C	2	525	3150	3465	50	1/6
Barrier Galvanized Steel Light Poles	1	Type B Grade 55 Spec. 3385.2.B	1	33	200	220	≤ 12 Pull with one arm	1/12
Barrier Galvanized Steel Light Poles	1	Type C Grade 105 Spec. 3385.2.C	1	64	382	420	≤ 12 Pull with one arm	1/6

Figure 0-31: Anchor Rod Tightening Guide Page 2

Anchor Rod Tightening
Torque and Turns Guide
MnDOT Traffic Signal and Light Pole

TRAFFIC SIGNAL POLES

Pole Type	Anchor Rod Φ (in)	Rod Type (galvanized to Spec. 3392)	Base Plate Thickness (in)	Using Torque Wrenches Manual and Hydraulic			Using Standard Wrenches: Combination, Socket, Structural, or Open Jaw Slugging Wrenches	
				Snug Torque (ft-lbs)	Verification Torque, Tv (ft-lbs)	Re-tightening Torque, Tr 48 Hours After Tightening	Snug Tight Wrench Length (in)	Final Nut Rotation Beyond Snug
Traffic Signal Mast Arm PA 85	1- 1/2	Type C Grade 105 Spec. 3385.2.C	1-1/4	221	1328	1460	21	1/4
Traffic Signal Mast Arm PA 90 & 100	2	Type C Grade 105 Spec. 3385.2.C	1-1/4	525	3150	3465	50	1/6
BA60 Signal Mast Arm Pole	1-1/2	Type C Grade 105 Spec. 3385.2.C	3	221	1328	1460	21	1/4
BA65 Signal Mast Arm Pole	1- 3/4	Type C Grade 105 Spec. 3385.2.C	3	349	2095	2304	34	1/6
BA70 & 75 Signal Mast Arm Pole	2	Type C Grade 105 Spec. 3385.2.C	3	525	3150	3465	50	1/6
BA80 Signal Mast Arm Pole	2-1/4	Type C Grade 105 Spec. 3385.2.C	3	768	4607	5068	74	1/6

Figure 0-32: Anchor Rod Tightening Guide Page 3

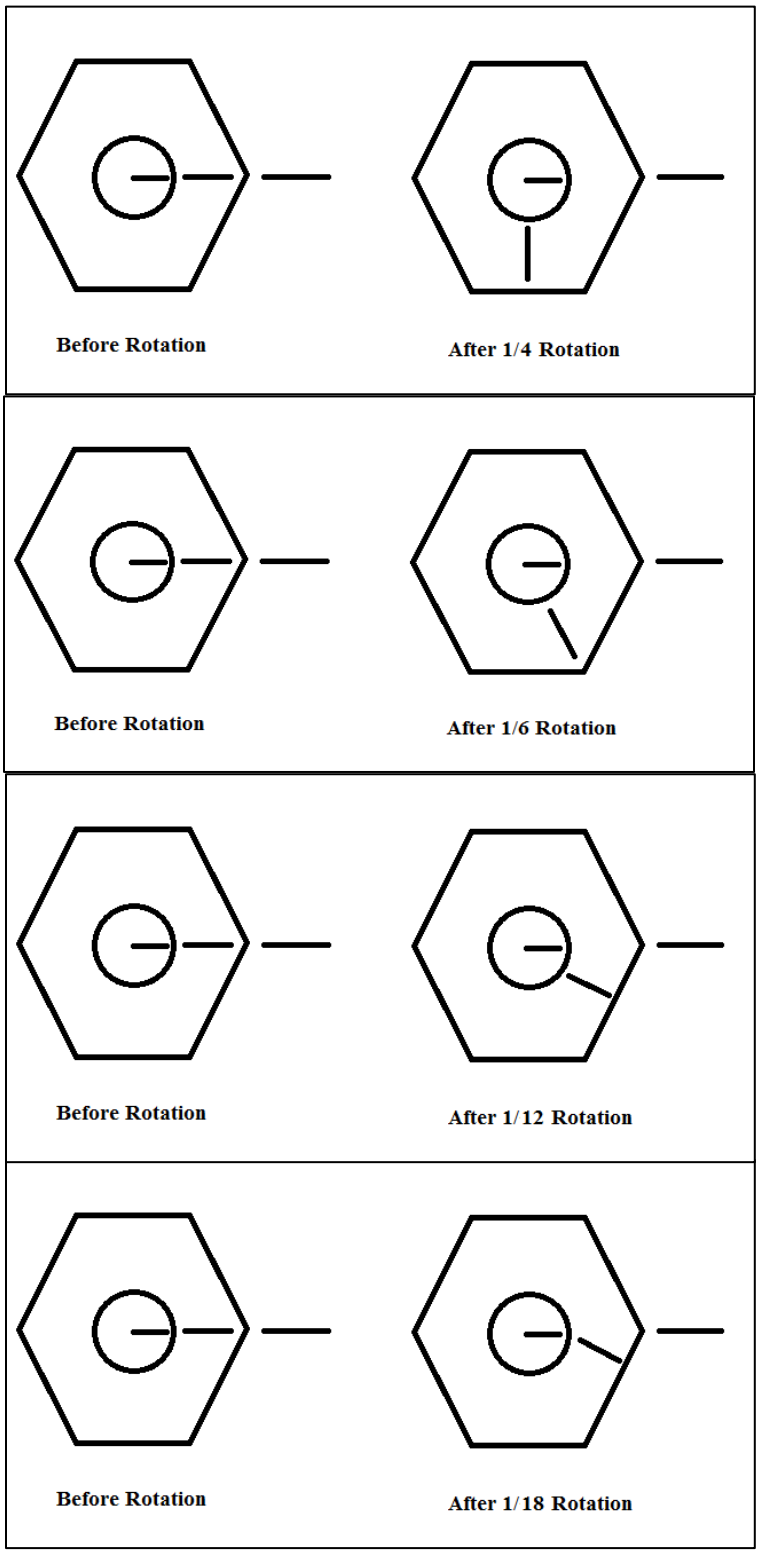

Figure 0-33: Nut Rotation Examples

Traffic Control Signal Products Listed on the MnDOT APL for Signals

EMERGENCY VEHICLE PREEMPTION SYSTEMS

- Emitter activated
- Siren activated
- Confirmation indication lamp holders
- LED EVP confirmation indications

LOOP DETECTOR AND UNDERGROUND PRODUCTS

- Loop detector splice kits and loop sealant
- Handholes and covers
- Temporary cabinet bases
- Pedestal steel screw in foundation

PEDESTRIAN PUSHBUTTONS AND MOUNTING HARDWARE

- Accessible Pedestrian Signal (APS) pushbuttons
- Solid state pedestrian pushbuttons
- APS pushbutton base
- APS pushbutton base adhesive anchoring systems
- APS mounting hardware

PEDESTRIAN PUSHBUTTONS AND MOUNTING HARDWARE

- Accessible Pedestrian Signal (APS) pushbuttons
- Solid state pedestrian pushbuttons
- APS pushbutton base
- APS pushbutton base adhesive anchoring systems
- APS mounting hardware

SIGNAL HEAD MOUNTING HARDWARE

- Plumbizers
- Angle and straight mount caps
- Strap-on / bolt-on hub and flange
- Clamp-on adaptor
- Cluster head adaptor
- Mast arm extension
- Signal head mounting spacers
- Pedestal reinforcing collar/pedestal shaft caps

SIGNAL MODEMS

SIGNAL SERVICE CABINETS, UPS SYSTEMS AND BATTERIES

TRAFFIC SIGNAL PAINT

VEHICLE AND PEDESTRIAN SIGNAL HOUSINGS AND INDICATIONS

- Pedestrian and signal housings
- Pedestrian indications
- Signal indications

FUSE AND WIRE HOLDERS, POLE BASE CONNECTORS, AND TERMINAL BLOCK COATINGS

- Fuse and wire holders
- Pole base connectors
- Terminal block coatings

ZINC RICH PAINT FOR GALVANIZED POLE REPAIR

Roadway Lighting Products Listed on the MnDOT APL for Lighting

STEEL SCREW IN FOUNDATIONS

LIGHTING HARDWARE

- Air obstruction light bolt on 3/4 inch hub
- Luminaire wire holder
- Insulated wire splice connector blocks
- Photo cells
- Power cable splice encapsulation kits
- Fuse holders
- Labels
- Vertical mount tenon adaptors

LUMINAIRES

LIGHT EMITTING DIODE (LED)

- Rest area
- Roadway
- Roadway underpass
- Roadway high mast
- Roadway 5 lane applications

SERVICE CABINETS

- Type B
- Type L1
- Type L2
- Type Rural Lighting and Flasher (RLF)

LED NAVIGATION LANTERNS

AIR OBSTRUCTION LIGHTS

Useful Web Links

MnDOT Traffic Engineering
http://www.dot.state.mn.us/trafficeng/

MnDOT Accessibility (ADA)
http://www.dot.state.mn.us/ada/

MnDOT Standard Plates
http://standardplates.dot.state.mn.us/StdPlate.aspx

MnDOT Standard Plans
http://standardplans.dot.state.mn.us/

MnDOT Standard Specifications for Construction
http://www.dot.state.mn.us/pre-letting/spec/index.html

MnDOT Approved/Qualified Products List
http://www.dot.state.mn.us/products/index.html

MnDOT Metro District Roadway Lighting System Layouts
http://www.dot.state.mn.us/metro/trafficeng/lighting_system_layouts.html

Pay Items List
(Mn/DOT- AASHTOWare Project Item List)
https://transport.dot.state.mn.us/Reference/refItem.aspx

Schedule of Materials Control
http://www.dot.state.mn.us/materials/labmcs.html

LRFD Bridge Design Manual (BDM)
http://www.dot.state.mn.us/bridge/lrfd.html

Metro Lane Closure Manual
http://www.dot.state.mn.us/metro/trafficeng/laneclosure/index.html

Signal Lighting Certification List
(Individuals Currently Certified by MnDOT)
http://www.dot.state.mn.us/trafficeng/signals/manual.html