MINNESOTA DEPARTMENT OF TRANSPORTATION
Engineering Services Division
Technical Memorandum No. 11-11-TS-02
April 21, 2011

To: Electronic Distribution Recipients

From: Jon M. Chiglo, P.E.
Division Director, Engineering Services

Subject: Temporary Portable Precast Concrete Barrier
Optional Connecting Pin Modification

Expiration
This is a new Technical Memorandum, and will remain in effect until April 21, 2016 unless superseded or incorporated into Mn/DOT Standard Plans or the Mn/DOT Road Design Manual prior to that date.

Implementation
The guidelines contained in this Technical Memorandum are for immediate implementation.

Introduction
All Temporary Portable Precast Concrete Barrier and associated connecting pins must meet the requirements of the most current Mn/DOT Standard Plate 8337.

A field modification has been approved to the connecting pin in order to improve the field placement and removal operations of the barrier system.

Purpose
The purpose of this Technical Memorandum is to provide specific design guidance and details of how the connecting pin can be modified.

Guidelines

The Modified Connector Pin shall be manufactured using AASHTO ASTM A36/A36M Steel.

The Modified Connector Pin is to be used as a connection between Temporary Portable Precast Concrete Barrier as specified in the most current version of Mn/DOT Standard Plate 8337.

Refer to the attached Figure 1, Modified T-Pin Connector Details, for design details.

Questions
For information on the technical contents of this memorandum, please contact **Michael Elle** at **(651) 366-4622**.

Any questions regarding publication of this Technical Memorandum should be referred to the Design Standards unit, DesignStandards.DOT@state.mn.us. A link to all active and historical Technical Memoranda can be found at http://techmemos.dot.state.mn.us/techmemo.aspx.

To add, remove, or change your name on the Technical Memoranda mailing list, please visit the web page http://techmemos.dot.state.mn.us/subscribe.aspx

Attachments: Figure 1. Modified T-Pin Connector Details

-END-

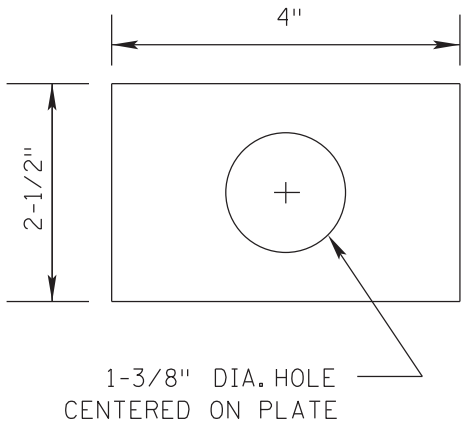

TOP PLATE DETAIL

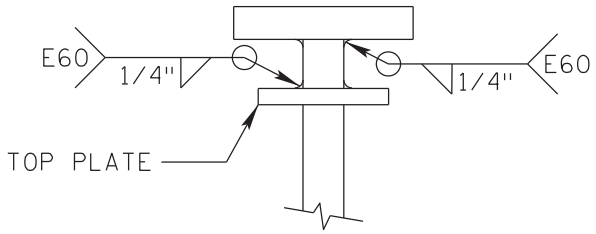

WELD DETAIL

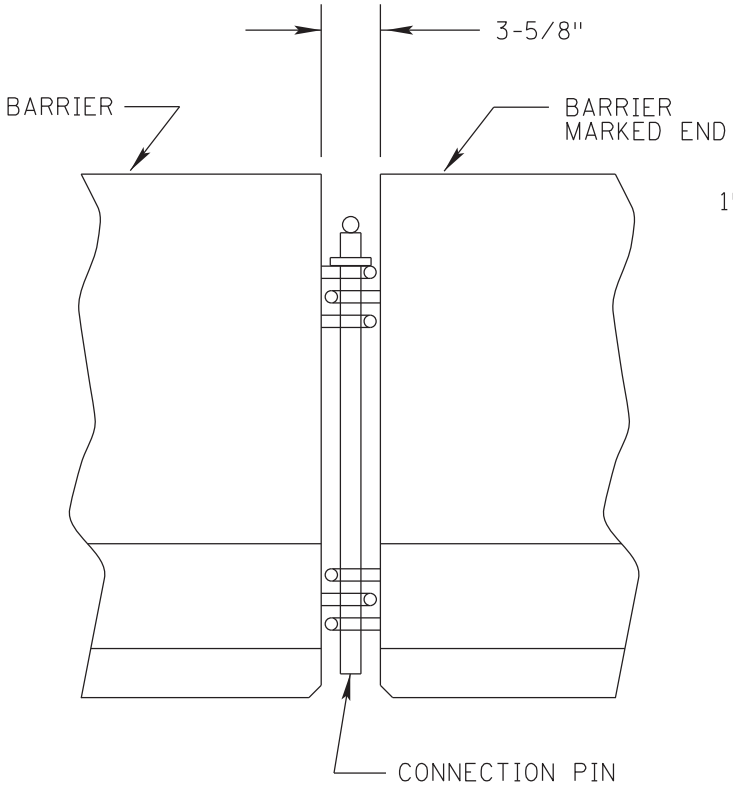

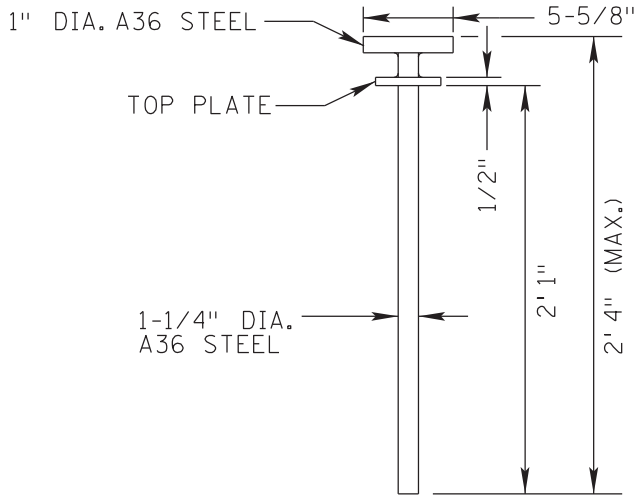

MODIFIED T-PIN CONNECTOR DETAILS
(WITH TOP PLATE)

NOTES:
CONNECTOR PIN SHALL BE MANUFACTURED USING AASHTO ASTM A36/A36M STEEL.
THIS MODIFIED DESIGN CANNOT BE USED WITH STEEL STRAP TIE-DOWNS.

MN/DOT TECHNICAL MEMORANDA 11-11-TS-02 4-21-2011	MODIFIED T-PIN CONNECTOR DETAILS FOR TEMPORARY PORTABLE PRECAST CONCRETE BARRIER	FIGURE 1