(Jeff Marlowe, Renville County Engineer and Tim Anderson, MN FHWA Bridge Engineer debriefing on CSAH 4 timber bridge 65541 during the 2016 NBIS Compliance Review for Renville County)

State Aid Bridge News

January 2017

Contents:

- Bridge Inspection General (pg. 1-2)
- Bridge Maintenance (pg. 3)
- Bridge Hydraulic News (pg. 4)
- New Precast Concrete Box Culvert Length Calculator (pg. 5)
- Precast Concrete Box Culvert General Plan and Elevation Standard Template Drawing (pg. 5-6)
- State Aid Bridge Wildly Important Goal (WIG) 2.0 (pg. 6)
- Local Bridge Replacement Program – State Transportation Funds (pg. 6-7)
- Local Timber Bridge Update (pg. 7-8)
- Permanently Removing Local Bridges from the National Bridge Inventory (pg. 8-9)
- 2016 Featured Local Bridge Construction Projects (pg. 9-10)
- Load Rating and Permitting Update (pg. 10-13)
- Bridge Replacement and Improvement Management Tool for Local Bridge Owners (pg. 13-14)
- Laboratory Inspection Services Request Form for Culvert and Bridges (pg. 15)
- S Barrier for Local Bridges (pg. 15)
- Resources for Program Administrators (pg. 16)
- Bridge Costs Update (pg. 16-17)
- Bridge Asset Management Update and NBIS Compliance Headlines (pg. 17-18)
- Update to Tech Memo for Pre-fabricated Pedestrian/Bicycle Bridge Superstructures (pg. 18)

Bridge Inspection General

Requirements for Routine Bridge Inspection Access

The National Bridge Inspection Standards (NBIS) definition of a routine inspection is as follows: Regularly scheduled inspection consisting of observations and/or measurements needed to determine the physical and functional condition of the bridge, to identify any changes from initial or previously recorded conditions, and to ensure that the structure continues to satisfy present service requirements.

The AASHTO Manual for Bridge Evaluation states that "Special equipment, such as under-bridge inspection equipment, rigging or staging, is necessary for routine inspection in circumstances where its use provides for the only practical means of access to areas of the structure being monitored".

There are times when the typical means of access for a routine inspection is not sufficient to satisfy the NBIS requirements. When routine inspection methods are not sufficient, inspections are expected to be conducted utilizing snoopers, lifts, ladders, barges, magnification optics, etc. as necessary to carefully and completely identify any condition changes.

Requirements were created to establish criteria for when bridge owners are expected to be taking a closer look at bridges, either due to deteriorated conditions of one or more elements or the element's location makes it difficult to assess its condition. The criteria used for determining which bridges require enhanced inspection access techniques is located in Appendix A of the Minnesota Bridge and Structure Inspection Program Manual (PDF).

(MnDOT A-62 Snooper on the Hennepin Ave. Suspension Bridge)

(continue on page 2)

...*continued,* Bridge Inspection General

Bridge Safety Inspection Refresher Training

Introduction

MnDOT, in cooperation with the FHWA and the University of Minnesota, College of Continuing Education, are pleased to offer seven Bridge Safety Inspection Refresher Training seminars to be held at various statewide locations in February and March 2017. To maintain MnDOT certification as a bridge safety inspector, program administrator, or team leader, attendance is required at a minimum of two bridge inspection seminars during each four year recertification period.

Who Should Attend

Individuals who need to maintain MnDOT certification as a Bridge Safety Inspection "Team Leader". Attendance is required at a minimum of two bridge inspection refresher training seminars during each four year recertification period.

- County, city, or consultant engineers who are designated as bridge inspection "program administrators" are required to attend a minimum of two bridge inspection seminars every four years.
- Individuals who assist in bridge inspections are not required to attend, but are welcome and encouraged to do so.

Description

MnDOT conducts Bridge Safety Inspection Refresher Training each year to improve the quality of inspections, introduce new equipment and techniques, and maintain consistency and reliability throughout the statewide network of bridge safety inspection programs. Speakers will discuss a variety of issues that surround key topics, and use visual presentations with handouts to deliver the core of this training.

2017 Topics

- 2016 Bridge and Structure Inspection Program Manual
- SIMS Update
- Bridge Inspection/Condition Rating Examples
- 2016 Underwater Inspections
- Recent Critical Findings & Compliance Review Issues
- UAS (Drone) Inspections

Instructors

- MnDOT and FHWA staff

General Information

- The seminar fee is $95 and includes training materials, lunch and refreshment breaks.
- Registration begins at 7:30 a.m. Seminars are scheduled from 8 a.m. to 4 p.m.
- Class space is limited and early registration is highly recommended.

Registration Questions Contact: Christine Preston, University of Minnesota, 612-624-4754, cceconf2@umn.edu

Curriculum Questions Contact: Pete Wilson, MnDOT, 651-366-4574, pete.wilson@state.mn.us

Dates and Locations

You may register online (full list of date/times are located on the right side of webpage) or print out a registration form (PDF) and mail or fax in.

Date	Location	Address	City
February 16, 2017	Hennepin County Public Works Facility	1600 Prairie Drive	Medina, MN
February 23, 2017	Carlton County Public Works Facility	1630 County Road 61	Carlton, MN
March 7, 2017	Southwest Minnesota State University	1501 State Street	Marshall, MN
March 9, 2017	MnDOT Headquarters St. Cloud Training Center	3725 12th St. North	St. Cloud, MN
March 16, 2017	Sanford Center	1111 Event Center Drive NE	Bemidji, MN
March 23, 2017	Canadian Honker Events at Apache	1517 16th Street SW	Rochester, MN
March 30, 2017	MnDOT Training and Conference Center	1900 County Road I West	Arden Hills, MN

Questions regarding this topic can be directed to Jennifer Wells at jennifer.wells@state.mn.us or 651-366-4573 or Peter Wilson at pete.wilson@state.mn or 651-366-4574.

Bridge Maintenance

SIMS

The SIMS Maintenance Module is available for local agencies to utilize within the new version of SIMS. Demonstrations of the Maintenance Module are available to local agencies by contacting Sarah Sondag at sarah.sondag@state.mn.us.

Training

Bridge Maintenance Training is also available to local agency participants. Training announcements are posted on the SALT Trainings and Workshops webpage. If interested, please follow the registration process outlined in the training announcement.

A brief description of each class is presented below.

Bridge Maintenance Academy I (E-learning Training)

Beginning in late Spring 2017, Bridge Maintenance Academy I will be offered as an e-learning training. The e-learning will provide participants with an introduction to the fundamentals required to perform bridge maintenance effectively, including bridge mechanics, bridge design concepts, plan reading, concrete, bridge safety, timber, and bridge preservation. We hope to have a pilot course available to Bridge Maintenance Academy II participants in late January. A separate notification will be sent when the full e-learning module is available. There will be no cost to participate in this training.

Bridge Maintenance Academy *II (February 6-10, 2017 at the MnDOT Plymouth Truck Station)*

In Bridge Maintenance Academy II, participants will receive an introduction to the fundamentals required to perform bridge maintenance effectively including strategies for structural steel, timber bridge maintenance and formwork. Participants will also be given the opportunity to observe experts and perform hands-on bridge maintenance tasks, such as concrete formwork, rebar placement, concrete placement, finishing and curing, chain dragging, concrete removal, concrete patching and structural steel repair. The recommended prerequisite for this course is Bridge Maintenance Academy I.

The cost to attend Bridge Maintenance Academy II is $100. Registration is available on the SALT Trainings and Workshops webpage. Please note that each agency is responsible for providing the appropriate safety, tool and equipment training, PPE and basic tools that are needed for participating in this hands-on academy.

Bridge Maintenance Academy III (will not be offered in 2017)

In Bridge Maintenance Academy III, participants will be given the opportunity to construct a small single span bridge in order to facilitate bridge jacking training. As part of this exercise, participants will be able to observe experts and perform hands-on bridge maintenance tasks, such as setting elastomeric bearings, setting steel beams, fastening steel diaphragms, constructing bridge deck formwork, placing rebar, placing, finishing and curing bridge deck concrete, installing a strip seal joint and performing full depth deck patching. Following construction of the bridge, participants will receive an introduction to basic bridge jacking and bearing and joint maintenance fundamentals as well as perform a bridge jacking exercise. Recommended prerequisites include Bridge Maintenance Academy I and II.

Bridge Maintenance Academy III will not be offered in 2017. It is anticipated that a class will be offered in 2018. The cost to attend Bridge Maintenance Academy III is $100.

Preventive Maintenance E-learning Modules

Bridge preventive maintenance e-learning modules for crack sealing and strip seal gland repair were developed by MnDOT and are now available to local agency participants. The e-learning modules focus on planning, equipment, materials and best practices for these bridge preventive maintenance activities. These modules are available on the Bridges and Structures Training webpage. There is no cost to access the preventive maintenance e-learning modules.

Additional e-learning modules for flushing and joint sealing are currently under development. Anticipated completion for the additional e-learning modules is early fall. A separate notification will be sent when the additional e-learning modules are available.

Bridge Maintenance Manual

The MnDOT Bridge Maintenance Manual is currently being updated through a consultant contract. It's anticipated that the new manual will be available in January 2017.

(Workers repair a column on one of two railroad bridges over Monroe Street in Minneapolis)

Bridge Hydraulic News

Technical memoranda 16-05-B-02 Storm Drain Design Frequency and Catch Basin Spacing (PDF) has been updated. With the current push toward flexible design, shoulder widths are no longer a standard size. The older criteria was based on standard roadway profiles, ie.. 12' lanes with 8' shoulders. This tech memo is intended to update MnDOT spread criteria to accommodate flexible design and to clarify policy relating to design frequency, allowable spread and placement of catch basins and bridge deck drains.

TABLE 1: DESIGN FREQUENCY AND ALLOWABLE SPREAD FOR STORM DRAINS

ROADWAY TYPE	DESIGN FREQUENCY	DESIGN SPEED	SHOULDER WIDTH (FEET)	LANE WIDTH (FEET)	ALLOWABLE SPREAD (FEET)
Interstate	10 Year	ALL	ALL	ALL	S
	50 Year at Major Sag Point				S + 3
Trunk Highway ADT 5000 and Greater	10 Year	ALL	≥ 8	ALL	S
		>45 mph	4 – 8	≥ 12	8
			< 4	≥ 12	S + 4
			< 8	< 12	S + 3(1)
		≤ 45 mph	2 – 8	≥ 12	8
			< 2	≥ 12	S + 6
			< 8	< 12	S + 5(1)
	50 Year at Major Sag Point	ALL	ALL	≥ 12	S + 6
				< 12	S + 5
Trunk Highway ADT Less than 5000	5 Year	ALL	≥ 8	ALL	S
		>45 mph	4 – 8	≥ 12	8
			< 4	≥ 12	S + 4
			< 8	< 12	S + 3(1)
		≤ 45 mph	2 – 8	≥ 12	8
			< 2	≥ 12	S + 6
			< 8	< 12	S + 5(1)

(1) Allowable spread not to exceed 8 Feet

S: Shoulder width (feet) is the distance from the edge of the travel lane to the face of the curb and includes the gutter width.

D: Driving lane width (feet) of the driving lane adjacent to the shoulder

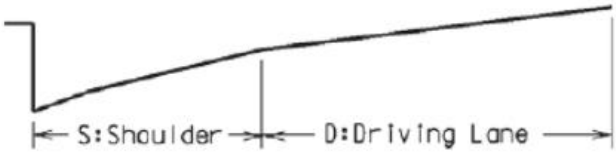

Figure 1: Shoulder and Driving Lane Description

For local frontage roads and streets design frequency and allowable spread: Use criteria from the State Aid Manual Allowable Spread Table if the road is on the State Aid System; otherwise use criteria established by the local road authority.

Plans of Action (POA)

POA are nearly all in compliance. Thanks to those who submitted their POA's in a timely fashion. The key issues for FHWA in their review of the POA's was:

- *Scour critical elevation* - this is the elevation of the stream bed during flooding that forces the closing of the bridge.
- *Contact information*- who do you call if you have to shut down the bridge
- *Detour information*- if you shut down the bridge, what are you going to do with the traveling public.

If you have any questions, contact Petra DeWall at petra.dewall@state.mn.us or 651-366-4473.

New Precast Concrete Box Culvert Length Calculator

State Aid Bridge has developed a new Precast Concrete Box Culvert Length Calculator for quick checking of barrel lengths in your culverts plans. This tool is an excel spreadsheet application that takes into account the culvert skew angle, vertical roadway profile, culvert cover, and culvert size and class.

It's currently being beta tested by State Aid Bridge, and will be posted on the State Aid Bridge website very soon. The tool will help State Aid District Offices review local culvert plans for pertinent information and quantities. We also think it may help local culvert owners who prepare their own culvert plans with plan checking to quickly validate the culvert length.

We also envision the capability of the Box Culvert Length Calculator to evolve overtime to handle more complex and unique geometric situations. However, like all applications, it's a balance between a useful tool, and a tool that becomes too difficult to use and maintain. Before we go live with the tool, we will develop some basic instructions, and useful diagrams to facilitate its use.

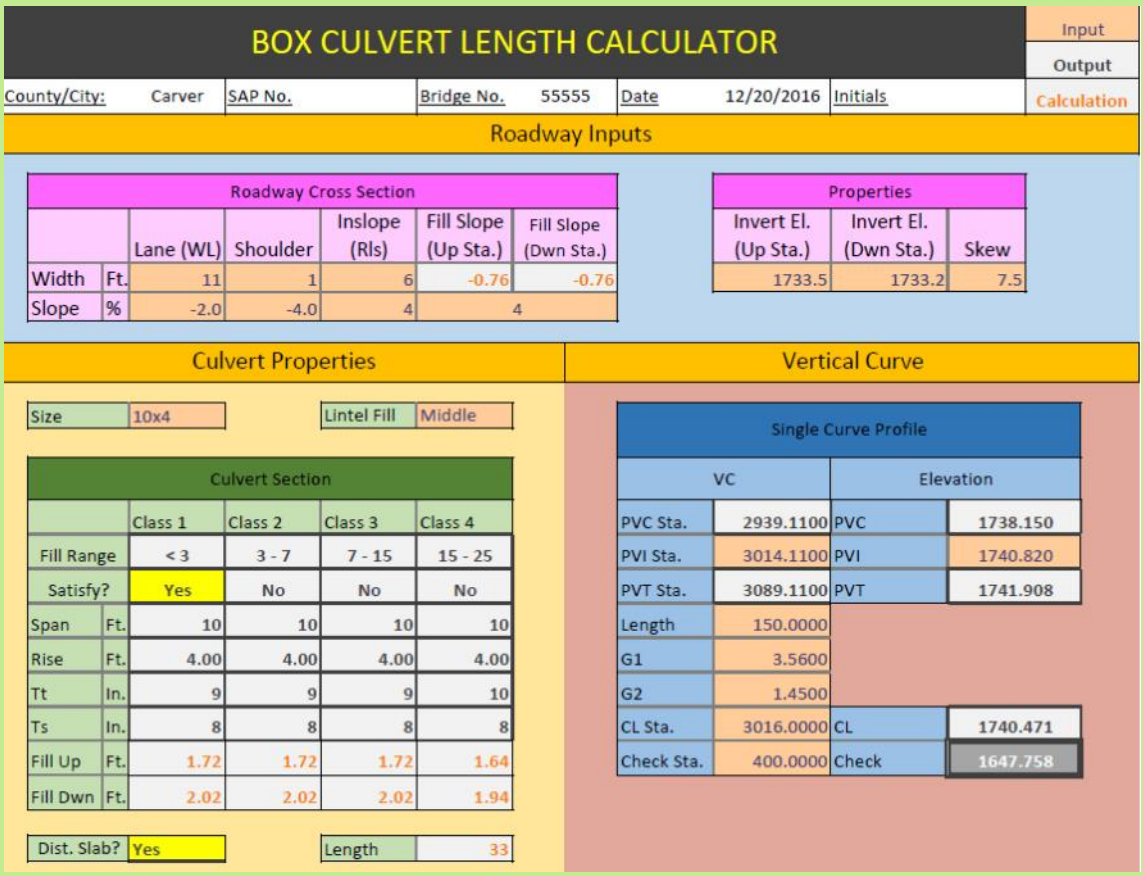

BOX CULVERT LENGTH CALCULATOR

Input
Output
Calculation

County/City:	Carver	SAP No.		Bridge No.	55555	Date	12/20/2016	Initials	

Roadway Inputs

Roadway Cross Section

		Lane (WL)	Shoulder	Inslope (Rls)	Fill Slope (Up Sta.)	Fill Slope (Dwn Sta.)
Width	Ft.	11	1	6	-0.76	-0.76
Slope	%	-2.0	-4.0	4	4	

Properties

Invert El. (Up Sta.)	Invert El. (Dwn Sta.)	Skew
1733.5	1733.2	7.5

Culvert Properties

Size	10x4	Lintel Fill	Middle

Culvert Section

		Class 1	Class 2	Class 3	Class 4
Fill Range		< 3	3 - 7	7 - 15	15 - 25
Satisfy?		Yes	No	No	No
Span	Ft.	10	10	10	10
Rise	Ft.	4.00	4.00	4.00	4.00
Tt	In.	9	9	9	10
Ts	In.	8	8	8	8
Fill Up	Ft.	1.72	1.72	1.72	1.64
Fill Dwn	Ft.	2.02	2.02	2.02	1.94

Dist. Slab?	Yes	Length	33

Vertical Curve

Single Curve Profile

VC		Elevation	
PVC Sta.	2939.1100	PVC	1738.150
PVI Sta.	3014.1100	PVI	1740.820
PVT Sta.	3089.1100	PVT	1741.908
Length	150.0000		
G1	3.5600		
G2	1.4500		
CL Sta.	3016.0000	CL	1740.471
Check Sta.	400.0000	Check	1647.758

Precast Concrete Box Culvert General Plan and Elevation Standard Template Drawing

In the 2016 State Aid Bridge Newsletter on pages 7 - 9 we mentioned the Bridge Office was developing a general plan and elevation (GP&E) template drawing for local highway bridge culvert projects. The primary purpose of the template drawing is to gain consistency with standard construction notes, design data, bridge location and identification information, etc. statewide.

The other driving reason to develop a template general plan and elevation is to make sure we are providing the minimum required plan information so that all new local bridge culvert plans can be clearly interpreted to input into SIMS. Unfortunately, many times it becomes difficult and time consuming for the Bridge Information Management Unit to determine the correct culvert fill depths from a GP&E sheet.

Also the template drawing will help us be consistent with MnDOT's LRFD Design

(continue on page 6)

(Precast Concrete Box Culvert under Front End Loader)

...continued, Precast Concrete Box Culvert General Plan and Elevation Standard Template Drawing

Manual, and to better assist local bridge owners with managing their culvert inventory, load rating, and overweight permit information into the future. An integral and important part of the Template Drawing is the Design Data Box. The Design Data Box will indicate the design specifications, minimum and maximum fill depths, bridge operating rating factor, design speed, ADT, etc. The values in the Design Data Box can be quickly entered into SIMS!

So at this time we are highly encouraging all local agencies to use the new Precast Concrete Box Culvert General Plan and Elevation Standard Template Drawing. The template drawing can be found on under "Precast Concrete Box Culvert Plan and Elevation Standard Template Drawing" under the "Guidance" category on the Bridge State Aid website. You can download a PDF of the drawing, and a Micro Station or AutoCAD file to start developing your GP& E sheet today. Lastly, you can still find the Box Culvert Standard Plans information in PDF or Micro Station files on the Bridge Standard Plan Manual—Box Culverts webpage. If you desire to have these template drawing provided in AutoCAD version 2004 or later, please contact State Aid Bridge.

State Aid Bridge Wildly Important Goal (WIG) 2.0

As you may know, MnDOT has adopted business strategies from the 4 Disciplines of Execution (4DX) to execute their most important strategic priorities- Wildly Important Goals (WIGs) in the middle of pressing day-to-day activities. Back in 2014-2015 MnDOT'S first WIG (WIG 1.0) was to earn stakeholder trust and confidence in MnDOT by demonstrating effective and efficient stewardship of public resources. For 2016-2018 MnDOT's second WIG (WIG 2.0) is to earn trust and increase transparency through a customer-centered organization in which we engage customers, listen to understand and balance the diverse needs of all to achieve the best possible outcomes.

So what is State Aid Bridge doing to help MnDOT reach their WIG 2.0? They have set their own sub WIG 2.0 to improve and update the State Aid Bridge Website to enhance internal and external customer experience by August 2017. To best understand where the State Aid Bridge Website needed improvement and updating, we developed a quick survey through SurveyMonkey for our external and internal customers to provide us feedback. We received some great feedback, and we appreciate those individuals that took time to complete the survey. After we complete our website improvements, we look forward to conducting a final survey with our customers to assure our WIG 2.0 is satisfied.

On another front, State Aid Bridge is also helping the State Aid Office meet their WIG 2.0, which is to improve external and internal customer knowledge about key department topics by developing online training resources and by providing recertification courses that can be done online with a completion date of September 2017. As part of this, State Aid Bridge is developing two online trainings on Bridge Load Rating and Posting and Permitting Bridges for the Program Administer. We will also assist in developing local bridge topics for an overall State Aid introductory training (State Aid 101) geared towards those who are unfamiliar or new to the State Aid Division. The online training format will be a PowerPoint slideshow, along with some short in person trainings to be held at future district meetings.

Local Bridge Replacement Program – State Transportation Funds

No new state bridge bonding money was received in 2016. The Governor had $90 million for the Local Bridge Replacement Program along with $43 million for St. Paul Kellogg - Third Street Bridge reconstruction, and $32 million for the Minneapolis 10th Avenue SE Bridge. Unfortunately the debate on the bonding bill at the legislature still remains unresolved.

However, on a positive note, State Aid recently solicited $6.1 million of 2020 and 2021 federal funds for Off-System Bridge Projects which are bridge projects located on roads with the functional classification of local or rural minor collector. The bridge application form was due to the DSAE on December 30, 2016.

As we prepare for state bridge bonding funds to eventually break loose upon agreement at the legislature, this is a great time to visit SALT Local Bridge Replacement Program webpage. This webpage has a wealth of information regarding the state transportation funded Local Bridge Replacement Program. It explains both the eligibility and selection criteria for state bridge bond funded local projects. It gives us a legislative bond appropriation history from 2006 to 2015. The webpage holds the latest Local Bridge Replacement Waiting List for state bridge bond funds. It also holds related guidelines and statutes, instructions and templates for Bridge Grant Agreements, and forms for application of bridge funds.

(continue on page 7)

...*continued,* Local Bridge Replacement Program – State Transportation Funds

Other information on the webpage includes the history, details and information on the Township program. There are links to tools on various resolutions, such as how to advance county regular/county municipal funds to supplement the Town Bridge Account. Tools on how to create a prioritized bridge replacement list, and to amend a prioritized bridge replacement list is also provided.

For more Information you can contact Patti Loken, State Aid Programs Engineer at patti.loken@state.mn.us or 651-366-3803.

Local Timber Bridge Update

Cost-competitive Timber Bridge Designs for Long Term Performance

This Local Road Research Board research project is moving along nicely. As you may recall the objective of this research project is to provide key and valuable information on cost-competitive construction options and strategies for constructing green, sustainable timber bridges produced by Minnesota companies. There are concerns that timber bridges are not cost-effective options when compared to concrete bridges. There is a need to develop innovative approaches to design, components, and construction strategies that result in cost-competitive options.

The research team is currently working with Matt Hemmila, the St. Louis County Bridge Engineer on a locally funded timber bridge demonstration project near Babbitt, Minnesota. The proposed bridge superstructure includes a transverse glulam deck on galvanized steel beams. There will be water flashing over the end-grain of the glulam deck panels. The deck panel wearing course will be bituminous with a fabric layer. The bridge site work has already started and the steel and timber material order was scheduled in December. The bridge plans have been vetted by industry experts, and the research team. The intent is to use the basics of this demonstration project to guide the development of standard superstructure options and cost assessments.

We have identified two other counties (Jackson and Hennepin County) willing to demonstrate other timber bridge designs, moisture management details, and construction strategies. Until then, the research team will be exploring design innovations and contracting options to support a cost competitive solution. An example of a contracting option to potentially reduce construction costs may include winter construction. As we know the weather does not affect the construction process for timber bridges so much, and there is no danger of damaging the timber material from freezing temperatures.

Our hope is to complete the bridge demonstration projects by August 2018, and to finish the final report for publication by March 2019. The research team will complete a final life cycle assessment, based on the specific bridge constructed. This information will be used to develop a presentation for the County Engineers Bridge Committee, and a Webinar for Minnesota County Engineers and their Local Bridge Consultants.

Specialized Timber Bridge Inspection Equipment for Local Timber Bridge Owners

Through the Local Road Research Board-Research Implementation Committee, we're now entering into our third and final year of providing advanced timber bridge inspection equipment to timber bridge owners. The management of the inspection equipment has been achieved through a contract with the University of Minnesota Duluth at their Natural Resources Research Institute (NRRI). The management of the equipment includes coordinating the shipping process, repairs, maintenance, consultation, and technical assistance.

(Winter field installation of a timber panel-lam bridge)

Multiple agencies have tapped into this service over the past few years. The NRRI conducted a few annual surveys with equipment users to gain feedback on the equipment, such as its ease of use, deployment, and condition. Users were also asked to identify which pieces of equipment (each equipment set contains a stress wave timer, moisture meter, and a resistance micro drill) were utilized during the inspections, and whether it allowed them to detect or further investigate problem areas that were previously noted during inspection. Based on the survey discussions, all users value the availability of the equipment for bridge inspections, and all agreed they would request the equipment for future inspections. Most of the users did confirm the presence of decay in the wood structures they inspected.

At this time, we want to highly encourage all timber bridge

(continue on page 8)

...*continued,* Local Timber Bridge Update

owners to utilize this specialized inspection equipment for next inspection season. The equipment can be reserved through the online request form (Google Docs). Also there's a wealth of timber bridge inspection and maintenance resources on the Bridge Inspection webpage. Lastly, we will be working with the County Engineer's Bridge Committee to determine who will manage this specialized inspection equipment beyond December 31, 2017.

New Treated Wood Template Waiver Forms for Locally Owned Timber Bridge Structures

The State aid Bridge Office, under advisement from the MnDOT Office of Environmental Stewardship and significant assistance, input, and vetting from the timber industry, has developed a treated wood waiver letter for local agencies to use as a template on projects that contain treated wood, and where they wish to waive the use restrictions set forth in *MnDOT's approved preservatives for the treatment of timber products Table 1 and Product definition and MnDOT use restriction of approved wood treatments Table 2*.

The Treated Wood Template Waiver Forms will allow timber bridge owners to use a wider variety of preservative treatments that have been adopted by both the AASHTO and the EPA for their project application. It gives the local owner the ability to considered factors such as environmental risk, cost, and durability in their final selection of wood preservative, all with the understanding they can discuss the potential environmental liability associated with their selection of wood preservative with the MnDOT Office of Environmental Stewardship at any time.

State Aid Bridge will be posting on their website, three distinct treated wood template waiver forms based on structure type for local agencies to choose from. We'll have a form for Timber Boardwalks, Prefabricated Pedestrian/Bicycle Bridges, or Timber Vehicular Bridges. Each template will have a list of recommended wood preservatives specific to the structure type. We're confident the template waiver forms will stimulate better coordination between the owner, owner's consultant, treated wood supplier and State Aid Bridge during plan preparation activities.

(Timber treated with an oil-borne preservative)

Permanently Removing Local Bridges from the National Bridge Inventory

There are certain facts we know about regarding the Minnesota Local Bridge Program. The local bridge needs for major repair, rehabilitation or replacement far outweigh the available funding resources to perform this work. This fact is a result of an extremely large population of local bridges (we have approximately 15,000 local bridge and 5,000 state bridge on the inventory), and the reality that bridges do have a finite life expectancy. Realizing these realities we're always striving for opportunities to help the typical local bridge owner manage their aging bridge inventory.

One way to help the bridge owner with these realities is to look for ways to reduce the size of their bridge inventory by permanently removing bridges. Unfortunately, even the best or the most obvious bridge candidates for permanent removal such as ones with very low ADTs, small detours, have load postings well below legal loads and/or have been closed for many years, still present many challenges for the bridge owner to permanently remove. One significant challenge that comes to mind may be the pressure of local politics.

(Removing Blue Earth County Bridge 90577, Prestressed Channel Span over the Little Cobb River)

Recognizing these facts, the Local Road Research Board has engaged MnDOT Research Services to provide a Transportation Research Syntheses (TRS) on methods, programs, and policies used by other states to permanently remove local bridges from the National Bridge Inventory, particularly those on low-volume roads. The purpose is to gain detailed information on these programs and policies to inform future potential actions in Minnesota.

This TRS includes documenting a thorough literature search, drafting interview questions and candidate list of states to contact, conduct interviews to gain the desired level of detail

(continue on page 9)

about their policies and programs, and to consult the Technical Liaison (TL) and Technical Advisor Panel (TAP) for feedback/comments to develop and complete a final TRS report by spring of 2017.

The contractor for this work is CTC & Associates, the project TL is Kelvin Howieson, District 3 State Aid Engineer, and the project TAP includes: Patti Loken, State Aid Bridge Programs Engineer, Matt Hemmila, St. Louis County Bridge Engineer, and Dave Conkel, State Aid Bridge Engineer.

2016 Featured Local Bridge Construction Projects

This year we would like to highlight several outstanding local bridge construction projects that all demonstrate creativity and engineering excellence in the rehabilitation of historic bridges. The selected historic bridges include: Dodd Ford Bridge, Old Cedar Avenue Bridge and Franklin Avenue Bridge.

Dodd Ford Bridge

Starting with the historic Dodd Ford Bridge owned by Blue Earth County, this bridge project was designed by Short Elliott Hendrickson Inc. (SEH), and constructed by Kraemer North America. The bridge was originally built in 1901, it spanned the Blue Earth River with a 148 ft. long overhead truss bridge. Blue Earth County explored replacing the Dodd Ford Bridge in 2007. But as a landmark of the community, in 2009 the Dodd Ford Bridge Preservation Society took efforts to get the bridge on the Minnesota National Register of Historic Places. The bridge was closed in 2008 due to deterioration, and insufficient load capacity.

With a sensitive historic bridge rehabilitation project now in mind, Blue Earth County and their consultant SEH collaborated with the State Historic Preservation Office and the MnDOT Bridge Office on building a new modern steel girder with concrete deck superstructure within the historic truss skeleton. This unique concept required a connection between the new superstructure and truss that would provide both lateral stability to the truss and prevent modern vehicle loads from transferring into the truss.

(The re-setting of the 1901 Dodd Ford Truss which required careful planning, temporary truss stability bracing and coordinated lifting by two cranes in order to return it to the new abutments)

This was accomplished by removing the truss floor system, and connecting the lower chords of the truss to the new girders with pinned connected steel plates or links. The pin connection was achieved by using a steel bolt in a compression spring type assembly which allows for pivoting for independent deflection between the steel girder and the truss. To explore the bridge more in depth we encourage you to watch Bridging the Past and the Present: How One County Preserved the Treasure of the Community (Vimeo).

Old Cedar Avenue Bridge

Another deserving historic bridge rehabilitation project to observe is the Old Cedar Avenue Bridge owned by the City of Bloomington, this bridge project was designed by SRF and Modjeski and Masters, and constructed by Kraemer North America. The bridge was originally built in 1920, and spans Long Meadow Lake, which is located in the Minnesota Valley National Wildlife Refuge. It is a five span camelback- through truss, 865 feet long and 20 wide. This bridge was listed on the National Register of Historic Places in 2013, and called for unique requirements with respect to design, restoration materials, and construction techniques.

There were many challenges to overcome with this project, such as: severe deterioration of the truss floor system, tipping piers and abutments, poor soil conditions, and major utilities in close proximity to the bridge; these included dual 40" siphon sewers, a fiber optic line that serves the airport and the 911 system, and a 20" high-pressure natural gas main. However, what paved the way to a successful project was the very detailed and exhaustive upfront bridge inspection and rehabilitation report.

Through these documents, the appropriate rehabilitation recommendation for each and every element of bridge was prescribed to meet the Secretary of the Interior's Standards for the Treatment of Historic Properties. Some of the more innovative recommendations included replacing the existing timber deck with a cast-in-place, lightweight concrete deck, using button head bolts to replace rivets (where rivets are removed), restoring steel members with impact damage to their original geometry using heat straightening techniques, reducing the number of stringers from 8 to 4

(continue on page 10)

...continued, 2016 Featured Local Bridge Construction Projects

between floor beams, and providing a combination bike and pedestrian railing using tensioned quarter inch stainless steel cables. To gain a deeper knowledge of the project background, documents, and photos of the rehabilitation project, visit the Old Cedar Avenue Bridge website.

Franklin Avenue Bridge

(Dan Enser and Mario Ratnaraj of HNTB with Moises Dimaculangan and Brian Homan of State Aid Bridge at the Franklin Avenue Bridge talking over the many project challenges and interesting rehabilitation techniques)

Our most notable and outstanding local bridge construction project for 2016 was the Franklin Avenue Bridge. It was a MnDOT - AGC Bridge Construction Award co-winner for bridges with a construction cost of greater than $5 million. The Franklin Avenue Bridge is a 1050-foot long, five span open-spandrel concrete deck arch structure crossing the Mississippi River. It was built in 1923 and rehabilitated in 1970, and it is owned by Hennepin County. This bridge project was designed by HNTB, and constructed by Kraemer North America.

There were many noteworthy design innovations regarding this bridge project. It called for accelerated bridge construction techniques to remove and replace the entire bridge deck to shorten the need for an extended closure and detour. Examples of innovative ideas included prefabricated bridge elements consisting of 43 pre-cast spandrel cap beams, 350 deck panels and 163 ornamental rail panels, Ultra High Performance Concrete to connect the deck panels together, and used a pre-mixed polymer concrete wearing course to improve ride ability and to protect the deck panels and construction joints from chloride intrusion.

This project exemplified great upfront planning by both the design team, owner and contractor. Much more can be learned about the Franklin Bridge Rehabilitation Project by simply searching the web. A few good websites to visit include the MnDOT Historic Bridge website and the Hennepin County Franklin Avenue Bridge webpage.

Load Rating and Permitting Update

SHV Load Rating Contract

The first four SHV load rating contracts have been completed. Approximately 2,900 local bridges were evaluated and 1,145 bridges (38 pecent) required load posting. It was the short span timber and steel beam bridges that required the large percentage of the load posting. The 1,000 local bridges with highest priority and most susceptible to SHVs were addressed in the first two sets of contracts.

We are currently in SHV load rating contract V that has approximately 1,400 local bridges and so far 1,069 bridges (76 percent) have been completed. To date, SHV contracts 1 through 5 have resulted in approximately 1,200 bridges to be load posted. As noted in the 2014 State Aid Newsletter, we predicted that the number of posted bridges would decrease annually and the bar graph presented below validates this outlook. Note, SHV contract V is only 76 percent complete, but based on the NBI condition of the remaining bridges in this contract it shows us that only a small percentage would perhaps require load posting.

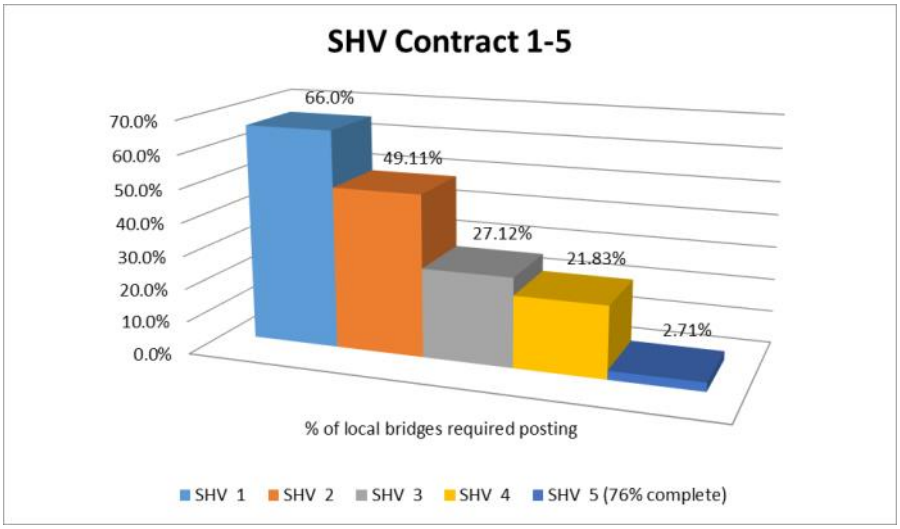

(continue on page 11)

...*continued,* Load Rating and Permitting Update

At the same time, State Aid Bridge is developing contract VI to have the consultants onboard in February of 2017. The contract is now being prepared to be advertised by the middle of January. This contract calls for another six local bridge consultants to load rate approximately 600 local bridges. The next contract will include culverts (metal/concrete), especially metal culverts with span lengths greater than 20ft. Most of the metal culverts in Minnesota are getting older and starting to show some form of deformation, thus it's imperative that they are evaluated properly. Also, truss bridges will be included in the contract. These bridges were added because they were never load rated for the SHV vehicles in the past.

Bridge load rating RC-CL form was also updated. State Aid Bridge realized that as the demand to have a more unified permitting process for local agencies in the state, it would be ideal to start building up our overweight permit load rating database to help local agencies with their overweight permitting needs. The RC-CL form was modified and updated to include all Minnesota standard overweight permit vehicles as well as the 6 and 7 axle annual permit vehicles. Shown below are the general configurations for the 6 and 7 axle annual permit trucks. The new form will now require that all bridges be analyzed for these vehicles and some counties have started using the information on the form and have found it very useful. To help engineers interpret the new features on the form, State Aid Bridge developed a flowchart to help understand the numbers. The flowchart will demonstrate how to approve or deny a permit based on the rating factor and the type of analysis used for a particular overweight vehicle. This information will soon be available on the State Aid Bridge website.

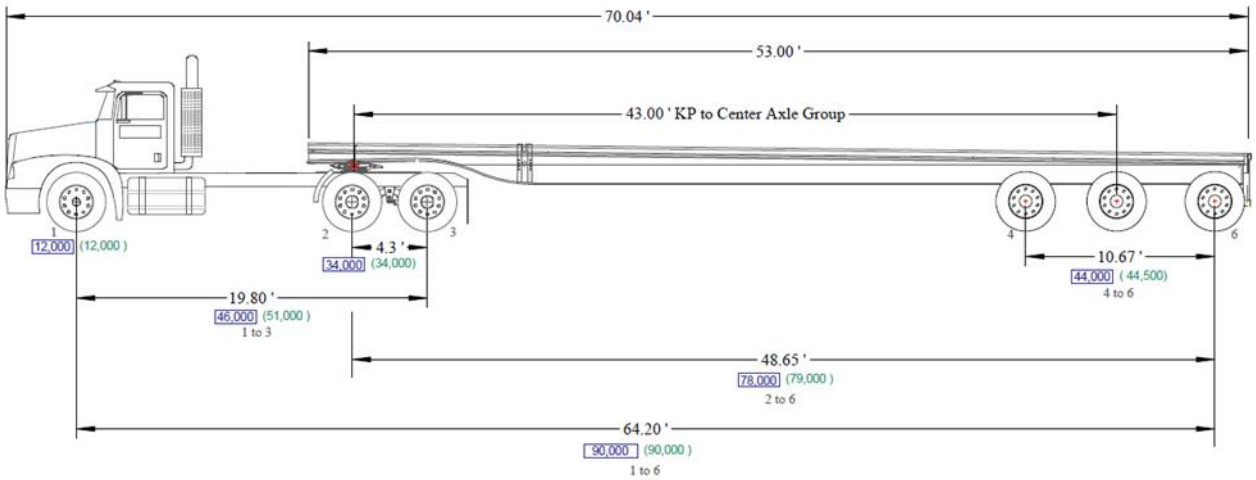

MN 6-AXLE ANNUAL PERMIT

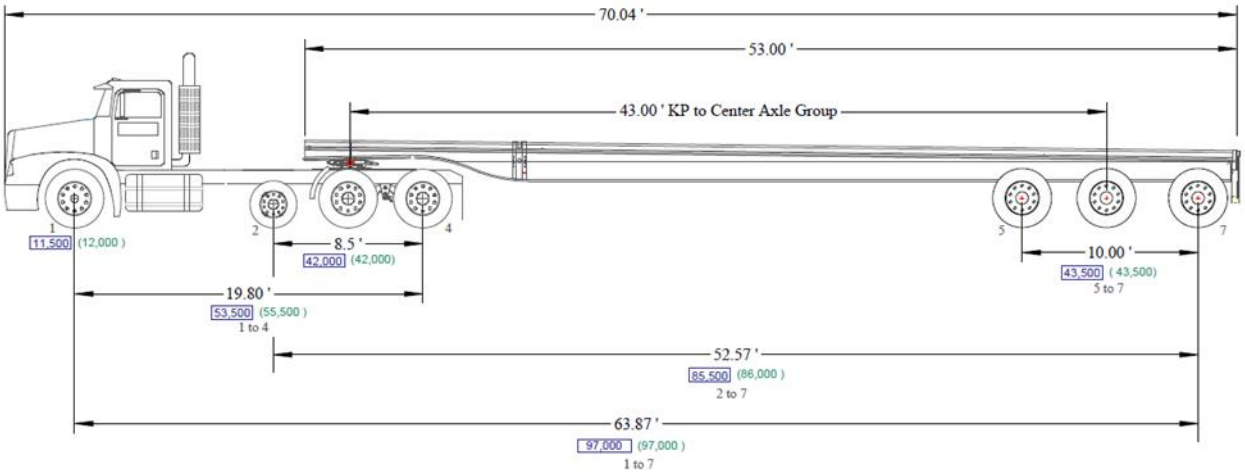

MN 7-AXLE ANNUAL PERMIT

Load Rating for the FAST Act's Emergency Vehicles

On December 4, 2015, the President signed into law the Fixing America's Surface Transportation Act (FAST Act), and on November 3, 2016 the Federal Highway administration (FHWA) put out a memorandum to provide guidance on maintaining compliance with the load rating and posting requirements of 23 CFR Part 650 Emergency Vehicles.

(continue on page 12)

...*continued,* Load Rating and Permitting Update

An emergency vehicle as defined in the FAST Act is designed to be used under emergency conditions to transport personnel and equipment to support the suppression of fires and mitigation of other hazardous situations. The gross vehicle weight limit for emergency vehicles is 86,000 pounds, with the following additional limits, 24,000 pounds on a single steering axle, 33,500 pounds on a single drive axle, 62,000 pounds on a tandem axle, and 52,000 pounds on a tandem rear drive steer axle. These vehicles can create higher load effects compared to Minnesota legal loads which includes the Special Hauling Vehicles (SHV).

The FHWA has determined that, for the purpose of load rating, two emergency vehicle configurations produce load effects in typical bridges that envelop the effects resulting from the family of typical emergency vehicles that is covered by the FAST Act. They include the Type EV2 - for single rear axle emergency vehicles with a front single axle of 24,000 pounds, and rear single axle of 33,500 pounds, and the Type EV3 – for tandem rear axle emergency vehicles with a front single axle of 24,000 pounds, and a rear tandem axle of 62,000 pounds. See figures below.

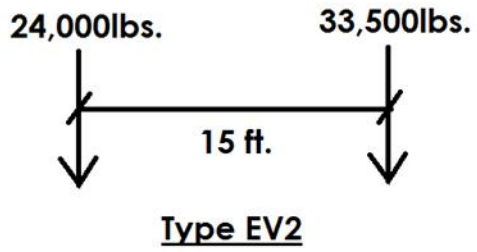

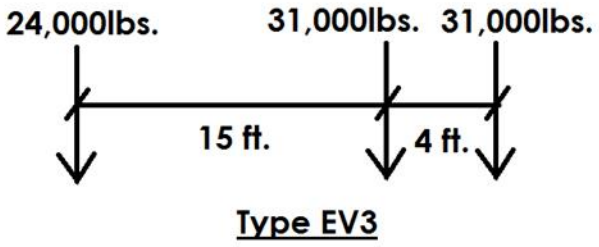

The formation of these two combinations represent the family of all typical emergency vehicles seen on today's US roadways and bridges. Recognizing that states and federal agencies cannot immediately load rate every Interstate System bridge and bridges within reasonable access to the Interstate, FHWA recommends that bridges be separated into two groups to prioritize load rating and posting for emergency vehicles.

The FHWA memo mentions if a state law allows or exempts emergency vehicles to operate without restriction off the Interstate System as legal loads, 23 CFR 650.313(c) requires bridges on these highways to be load rated and posted, if necessary, for the Type EV2, and Type EV3 vehicles. Unfortunately, our state exempts fire trucks from all state laws governing weight provisions, including bridge load limits/posting signs (Minnesota Statute 169.80). So per this FHWA memo, this means all bridges off the Interstate System which includes local bridges will eventually require load rating and posting for emergency vehicles.

According to this memo, we will now include load rating for the emergency vehicles in SHV Load Rating Contract VI and future SHV load rating contracts. The MnDOT Bridge Office is currently working with the Minnesota Division FHWA on implementing this FHWA memo. There are obviously many questions that need consideration such as establishing a state emergency vehicle weight limit sign, educating local fire departments statewide, etc. State Aid Bridge will be working through the County Engineers Bridge Committee in coordination with the MnDOT Bridge Office, FHWA, and local bridge owners to address emergency vehicles. In the meantime, until we get more direction from the FHWA, local bridge owners, and MnDOT, EV load rating information listed on the load rating form will be for information only.

Unified Permitting Process (UPP) Project

The MCEA Transportation Permit Committee, which includes City Engineers, County Engineers, MnDOT, and trucking industry, have been working toward a possible One Stop Shop Permit. Three years ago, for Phase I, MnDOT hired Cambridge Systematics to help us determine the usefulness of a Statewide Coordinated Permitting Process and what that may look like. The result from that study suggested that locals want more bridge analysis and enforcement support from MnDOT, but they don't want MnDOT to take over the whole permitting of county and municipal roads. Based on that information, Phase II was developed and prompted the UPP project. This is the second step in a series of projects that could ultimately lead to a "one stop shop type process." The focus of this project would be to expand on the work from the Cambridge study.

The UPP project will focus on reviewing the current permitting practices that we have now and develop a plan for creating a process and policies to address both government and hauler needs for creating an automated system within and across multiple counties or agencies. The push for a unified permitting process is being mostly driven by the hauling industry to make local agencies with the state to improve the OSOW process across county and state jurisdictions.

SALT and Oversize and Overweight Bridge Committee hired SRF and ProWest consultants to help facilitate the project and provide a final report including recommendations. To better understand the needs for this project, the consultants would conduct interviews of people from different stakeholders, from MnDOT and local agency engineering personnel and trucking industry representatives to explore what the current process is that we have in place. In the end, there will eventually be a pilot project introduced to test the process, etc. Both the City of Duluth and St. Louis County offered to host this pilot project.

(continue on page 13)

...*continued,* Load Rating and Permitting Update

Effects of Implements of Husbandry on bridges - NCHRP project

As you know, Moises Dimaculangan has been selected to serve as a panel member for the NCHRP project called Proposed New AASHTO Load Rating Provisions for Implements of Husbandry. The goal of this project is to propose new implements of husbandry (IOH) load rating provisions for the AASHTO Manual for Bridge Evaluation (load factor rating "LFR" and load and resistance factor rating "LRFR") and develop a set of procedures on how we would evaluate or load rate bridges for various configurations of IOH. The contract has been executed and a consultant has been selected that would perform the work. Currently, there are no known guidelines regarding how to load rate and post our bridges for these vehicles. So this project may provide solution to this problem. It's well worth noting that statutorily, a person operating or towing an implement of husbandry on a bridge in Minnesota must comply with the state gross weight limitations and comply with the posting sign that limit the maximum weight allowed on a bridge. At this point, it comes down to educating farmers on what the laws say about weight limitation of farm equipment on a bridge.

New Bridge Load Rating Manual (BLRM)

The MnDOT Bridge Office has contracted with Michael Baker International to develop a new standalone load rating manual. This manual will completely replace Chapter 15 of the MnDOT LRFD Bridge Design Manual. For those local agencies and consultants that perform load rating, posting, and permit evaluations, a manual like this will be very valuable. The new BLRM will be fully updated for Load and Resistance Factor Rating methodology and MnDOT policies on load rating, posting, and permitting vehicles for routine, curved or skewed, and complex bridges, bridge rehabilitation projects, substructures, steel culverts, load rating forms, etc. The new BLRM is scheduled to be completed by 12/15/2017 for publication.

To date, Michael Baker International has reviewed MnDOT's in place load rating guidance, policies, manuals, examples, Special Hauling Vehicle Contracts, the Manual for Bridge Evaluation by AASHTO, and load rating manuals from other state agencies (Iowa, Wisconsin, Florida and Utah) to identify gaps and inconsistencies in the documents. They have already prepared a proposed table of contents for the BLRM. Several MnDOT Bridge Office Engineers, including: Ed Lutgen, State Bridge Construction Engineer, Arielle Ehrlich, State Bridge Design Engineer, Moises Dimaculangan and Dave Conkel of State Aid Bridge, and Yihong Gao, State Bridge Load Rating Engineer and Project Manager of the BLRM, are helping guide and review the new BLRM.

Bridge Replacement and Improvement Management Tool for Local Bridge Owners

Way back in 2012 the MnDOT Bridge Office presented on their Bridge Replacement and Improvement Management (BRIM) tool to several county engineers in District 6 and 7. Shortly after that presentation, the County Engineers Bridge Committee elected to pursue a BRIM tool for local bridges. State Aid Bridge then issued one pagers on BRIM to local bridge owners statewide. After a few attempts to create a BRIM tool for local bridge owners, we're finally positioned to start its development. To get there we needed full consensus from the County Engineers Bridge Committee, and approval from the Minnesota County Engineers Board of Directors (MCEA-BOD). We attained approval from the MCEA-BOD in March 2016, and assembled a great team to get things rolling.

We had a little hiccup and delayed start up until early March 2017 to fully allow MnDOT to finish their BRIM tool update for the National Bridge Elements (NBE) and Element Level Bridge Inspections in 2016. David Hedeen, Bridge Inventory Management Unit Leader, reprogrammed the MnDOT BRIM for NBE, and has volunteered to program a local BRIM for NBE. Dave's effort to program a local BRIM tool will cover a six month time frame under a part time basis. His deep knowledge of the MnDOT BRIM, SIMS and the NBIS will bring great efficiencies to the project. He will be guided by an excellent team of local bridge engineers, Collins Engineering-a national bridge consultant, the County Engineers Bridge Committee and BRIM Sub-Committee, State Aid Bridge and the Bridge Office.

To recap, the local BRIM tool will aid local bridge owners in prioritizing their bridge replacement and rehabilitation needs. Apparently several counties within District 6 are using a similar bridge prioritization data type manual spreadsheet that was prepared by a consultant for Freeborn County's timber bridge inventory. The logic of this spreadsheet is very similar to a BRIM tool, but requires constant manual updating as the bridges age and get rehabilitated or replaced. The new BRIM tool will automatically read the latest SIMS data and automatically recalculate the bridge prioritization lists on demand. As one Minnesota County Engineer said, "*I think that having an automated report tool is a great idea as there are many factors that go into bridge replacement schedules, beyond the current bridge condition, such as expected remaining service life, bridge type, traffic volume, detour length, etc. My recommendation would be allow counties to modify the priority factors in whatever tool is created as each part of the state has varying conditions they need to account for*."

(continue on page 14)

...continued, BRIM Tool for Local Bridge Owners

So why should we move to a BRIM tool to prioritize our bridges when we already have the federal sufficiency rating formula to prioritize with? The answer to this question is pretty simple, the sufficiency rating formula was really used as a means to apportion Highway Bridge Program Funding to States, and an early attempt at bridge management. Since the MAP-21 (Moving Ahead for Progress in the 21st Century Act) highway bill of 2012, the FHWA has moved to a Risk-Based Prioritization bridge management approach. The FHWA still uses sufficiency rating for guidance in some programs, but the federal aid program no longer uses sufficiency rating. The problem, as it relates to bridge decks, is the formula gives very little weight to the condition of a bridge deck. MnDOT uses their BRIM tool to manage their bridge decks by prioritizing them for preventative maintenance, replacement or rehabilitation. It is easily shown that it is cost effective to rehabilitate or replace structurally deficient bridge decks before more extensive damage is done to the superstructure and substructure.

How does BRIM work? The BRIM process is a data intensive analysis of the bridge inspection and inventory data. The evaluation process also relies on critical input from local experts on the bridges.

BRIM uses risk assessment methods to determine the bridge's probability of a service interruption. As the probability that a bridge will have a service interruption increases, the score it receives for each of the factors analyzed decreases. The relative magnitude of the score is then adjusted by the consequence of the service interruption experienced by the users, based on number of users, length of detour and potential time to mitigate the service interruption. BRIM assigns a score to each bridge to represent its relative priority for Replacement or Improvement called Bridge Planning Index (BPI). BPI ranges from 0 (highest priority) to 100 (lowest priority).

Having almost four years of experience now using a BRIM tool, MnDOT has included extensive logic in their tool in which analysis results in a draft list of needed bridge projects, including anticipated costs and schedules. Sounds great, so why can't we just use the MnDOT BRIM for local bridges? The problem is the local bridge inventory has a greater variety of bridge types, and conditions, e.g. over half of the local inventory is steel and concrete culverts, and many bridges have timber superstructures and substructures, and many bridges are load posted. The risk factors for a timber superstructure and substructure are much different than a concrete superstructure and substructure typical of a state bridge. The local BRIM tool will be customized for the specific local bridge inventory structure types.

Will the local BRIM tool be used to prioritize bridges for funding statewide? At this time, the answer is no, we will still follow our current process on selecting bridges for funding. This process which is one of collaboration between the local bridge owner, the District State Aid Engineer, and the State Aid Bridge Programs Engineer with input from State Aid Bridge continues to be supported by the County Engineers Bridge Committee. However, we're looking at the current eligibility criteria, e.g. a bridge must be structurally deficient or functionally obsolete with a sufficiency rating less than 80 to qualify for State Transportation Fund (Bridge Bonds) for replacement, rehabilitation or abandonment. The results of the BRIM tool may shed more light on the bridge eligibility criteria in the future.

To date, MnDOT's Trunk Highway BRIM tool was presented, along with a more simplified version that could be developed in a Crystal Report (an application that can generate reports from a wide range of data sources such as SIMS). Without the aid of the BRIM tool, most agencies are using sufficiency ratings as their main resource to determine when a bridge should be replaced. Once the BRIM tool is developed, a report will be able to be prepared for each local agency in a similar manner as the rest of the Crystal Reports. Each local agency will be able to adjust the consequence of the service interruption into the BPI with owner defined importance factors for Average Daily Traffic, Route Classification, Detour Length, Bridge Length, etc. As the BRIM tool project develops we will be communicating our progress, and seeking feedback from other owners beyond the BRIM Committee. Through the County Engineers Bridge Committee we will also visit county engineer meetings statewide to present on the tool. Lastly, we're proud to say we're developing this tool for around $60,000 by using in-house resources at MnDOT to perform the lion's share of the work, and a national consultant to help organize the effort. By comparison, the original state BRIM cost around $300,000 to develop and program.

(An emergency closure of a Minnesota local bridge)

Laboratory Inspection Services Request Form for Culvert and Bridges

If your local project includes a precast concrete box culvert and/or a bridge structure, and it is funded with state and/or federal funds, the fabrication shop drawings must be reviewed, and the fabrication work must be inspected with either MnDOT inspections services, or a MnDOT approved independent assurance consultant/inspection firm.

The way these important services are requested and communicated are through the Laboratory Inspection Service Request Form (Word). This form must be submitted with the project documents accompanying the culvert or bridge plan to the District State Aid Office.

It's extremely important for the owner or owner's consultant to thoroughly fill out these forms with the requested information. In order for inspection services to be performed the MnDOT Technical Assistance number must be indicated along with the state aid or state project numbers. If your project includes a bridge structure, you're more than likely to require both structural metals shop drawing review and inspection, so please check the structural metals inspection box!

Note, State Aid Bridge is currently coordinating with the MnDOT Fabrication and Structural Metals Unit, and the Prestressed and Precast Concrete Inspection Unit on some form revisions and clarifications to help assure the form is consistently and correctly filled out. As we know, an incomplete form can result in important fabrication work slipping through without professional inspection. Between the District State Aid Offices, the owner and their consultant's careful attention, and an improved Laboratory Request Form, we will help assure that all required fabrication shop drawing reviews and inspections are being performed.

S Barrier for Local Bridges

We have been communicating with local agencies and their bridge consultants on the S barrier for some time now. Since about August of 2016 we have been directing local bridge consultants starting new preliminary local bridge plans to incorporate single slope barriers in lieu of the old Type F barriers.

Why use an S barrier? Because the AASHTO Manual for Assessing Safety Hardware (MASH) is the new set of guidelines for crash testing of safety hardware devices. The need for updated crash test criteria was based primarily on changes in the vehicle fleet since the old NCHRP Report 350 criteria was adopted in 1993. Vehicle changes include an overall mass increase and center of gravity changes in both the small car and pickup vehicles. On January 7, 2016 MASH and the FHWA issued a joint memorandum (PDF) that prompted MnDOT to issue a technical memorandum on implementation guidance of MnDOT's new Single Slope Median Barrier design and MnDOT Type 31 Guardrail design, technical memorandum No. 16-09-TS-04 (PDF).

For specific bridge barrier guidance, please reference the MnDOT LRFD Bridge Design Manual Memo to Designers 2016-01 (PDF). Note, MnDOT has three S barrier heights; 36", 42" and 54". See Single Slope Barrier Type on the Bridge Details Manual Part II webpage. The preferred contractor construction method is slip forming.

If your local bridge requires approach guard railing please reference the above technical memorandum on W-beam barriers, terminals, and transitions and W-beam barrier transition connection to non-single slope barriers. Note, any time Type 31 guardrail is being connected to an existing bridge, consult a MnDOT Regional Bridge Construction Engineer or the MnDOT Bridge Standards Unit for the required barrier modifications to accommodate the attachment. Also the Type F temporary portable precast concrete barrier (Standard Plate 8337) has been successfully crash tested to meet MASH TL-3, so it will not be replaced and can continue to be used where applicable.

(Single Slope Concrete Barrier developed and crash tested to meet MASH by the Texas Transportation Institute)

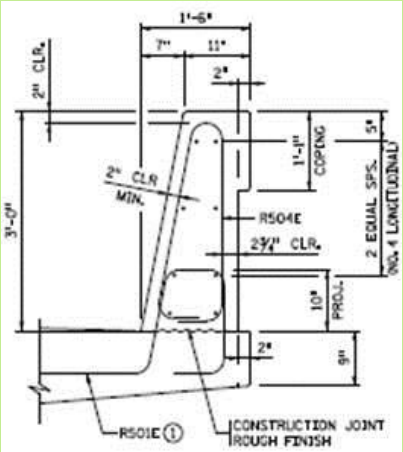

(MnDOT Single Slop Concrete Barrier 36" without concrete wearing course detail)

Resources for Program Administrators

Over the years and from a recent local agency customer survey on future training needs, we understand that our County/Local Program Administrators (PA) are requesting more specific training regarding local bridge management. We agree this is a needed training area and look forward to putting together both an online and a live training opportunity for PA's. At this time we're developing an online training module for load rating, posting, and permitting local bridges with a primary focus on relevant matter for PA's. However, we do plan to eventually expand the training modules into broader areas of local bridge management. This would include training on evaluating and developing bridge replacement, rehabilitation, preservation and maintenance needs based on bridge inspection reports, administering a local bridge inspection, reporting and inventory program, etc.

Along with the exciting training opportunities ahead of us, our MnDOT Bridge Safety Inspection Refresher Training Seminars are trying to include more topic areas relevant for PA's. As we build up more specific training for PA's, we wanted to list some good online resources for PA's below.

- MnDOT's definition of a Program Administrator – A certified Professional Engineer appointed by an agency or jurisdiction to oversee the bridge inspection program and have quality control responsibilities as delegated by the State Program Manager. Typically, the PA is the City or County Engineer, a consultant, or the District Bridge Engineer. In accordance with Minnesota Statute 165.03 Subd. 2, the County Highway Engineer is designated as Program Administrator for all bridges located wholly or partially within or over the right of way of any county or town road, or any street within a municipality that does not have a city engineer regularly employed.
- MnDOT's Bridge and Structure Inspection Program Manual (PDF)
  - ⇒ A.3.5 RESPONSIBILITIES FOR BRIDGE SAFETY INSPECTION, A.3.5.2 Program Administrators, page 8
  - ⇒ A.4.1 INSPECTION PROGRAM PERSONNEL QUALIFICATIONS, A.4.1.2 Program Administrator Qualifications, page 11
  - ⇒ A.4.2 INSPECTION PROGRAM PERSONNEL RESPONSIBILITIES, A.4.2.2 Program Administrator Responsibilities, page 13
  - ⇒ A.4.3 CERTIFICATION AND APPOINTMENT PROCESS, A.4.3.1 Program Administrator, page 14
  - ⇒ A.8.4 ROLE OF INSPECTION PROGRAM ADMINISTRATOR, A.8.4.2 County/Local Program Administrators, page 47
- FHWA Bridge & Structures, Bridge Management
- FHWA Bridge & Structures, NBIS Framework
- Bridge Inspection Quality Assurance (PDF)

Bridge Costs Update

Calendar year 2016 saw a moderate unit cost decrease for PCB type structures and a moderate unit cost increase for the C-SLAB type structures. These two structure types account for the majority of local bridges. In a departure from the norm, the C-SLAB structure type was not the lowest unit cost structure on the local system. This year the PCB type edged it out for the lowest cost structure type.

We also let a single INV-T (Prestressed Inverted T-Beams) bridge in CY 2016, which came in at about $192/sf. We let a single steel pedestrian TRUSS structure in CY 2016 and that unit cost was moderately down from last year. Steel truss bridge prices fluctuate greatly from year to year and likely reasons are the size/length/location of these bridges which can vary widely and these factors can affect the unit cost.

We also added a new structure type to the report last year, Pedestrian Boardwalk (BRDWLK). We've built these in the past but they were so sporadic that we didn't track them. It seems they are building more trails these days (and we let 4 boardwalk structures in CY 2016), so we decided to start tracking them. The average cost for these 4 boardwalks were $73/sf.

There was a moderate increase in the number of C-SLAB bridges compared to CY 2015 (17 let in CY 2016 vs. 12 let in CY 2015). There was a slight increase in the number of PCB bridges compared to CY 2015 (23 let in CY 2016 vs. 21 let in CY 2015). The unit cost percentage increases/decreases are shown below.

PCB structure costs were down 12 percent ($151.93/sf in CY 2015 vs. $135.07/sf in CY 2016)
C-SLAB structure costs were up 11 percent ($121.49/sf in CY 2015 vs. $136.38/sf in CY 2016)
TRUSS pedestrian structure costs were down 10 percent ($293.89/sf in CY 2015 vs. $263.65/sf in CY 2016)

We replaced approximately 47 timber bridges and one fracture critical bridge in CY 2016. Timber bridges are considered to be of full timber construction or timber pile/abutment construction. The fracture critical bridge was a low truss bridge.

Of the 47 timber bridges replaced in CY 2016, 23 of them were replaced with concrete box culverts, 12 were replaced with C-SLAB bridges, and nine were replaced with PCB bridges. The remaining three timber bridges were replaced with an INV-T bridge, a TTS (Treated Timber Slab) bridge, and a ROAD IN LIEU project.

(continue on page 17)

...continued, Bridge Costs Update

The lone fracture critical bridge replaced in CY 2016 was replaced with a STEEL beam bridge (that had a timber deck).

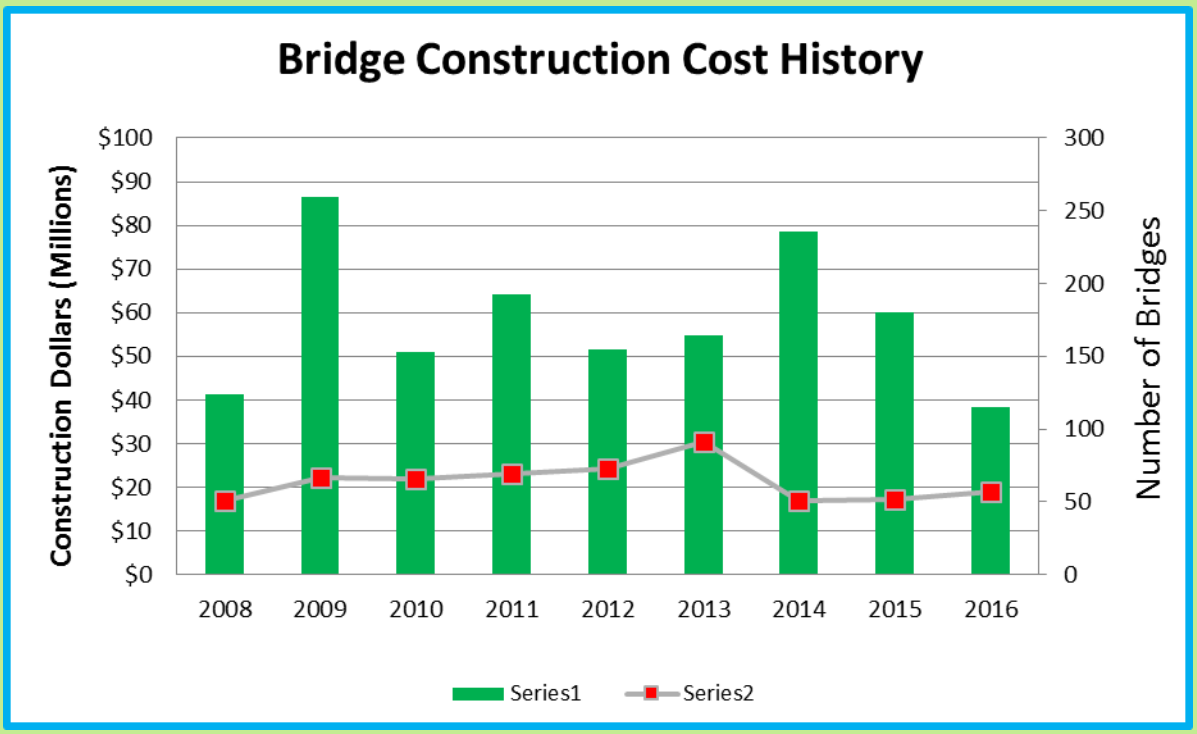

Bridge Asset Management Update and NBIS Compliance Headlines

Late Bridge Inspections

Minnesota has made great strides in complying with Metric 6, Routine Inspection Frequency for Lower Risk Structures. Below is the State's NBI Compliance since the FHWA rolled out their metric evaluation in 2011:

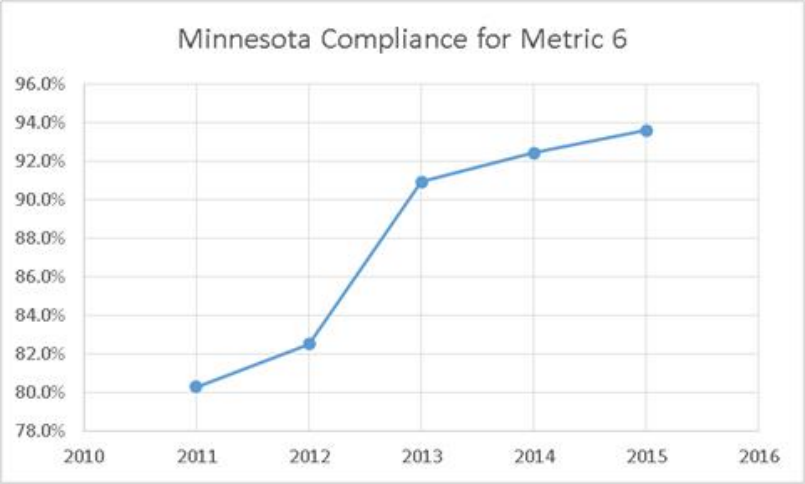

However, please be aware that the state is still considered in conditional compliance due to just 28 bridges being inspected beyond four months late in 2015. These 28 bridges also happen to be owned by one agency. Don't be that agency! Please make every effort to inspect your structures on time or within the grace period. Please contact Ed Lutgen at ed.lutgen@state.mn.us if you expect to exceed your inspection frequency beyond the grace periods.

Certification of Bridge Safety Inspection Is No Longer Required

The Certification of Bridge Safety Inspection to the Commissioner of Transportation form has been retired as the information on this form is obtained through other means.

(continue on page 17)

...*continued,* Bridge Asset Management Update and NBIS Compliance Headlines

NBI 41 Requirements

When the Bridge Inventory Management Unit (BIMU) receives a Bridge Load Rating and Load Posting report that requires that the bridge be load posted, BIMU will enter Code "B-Posting required but not legally implemented" into SIMS under NBI Item 41 (Status). When the bridge or culvert owner verifies that the correct load posting signs are in place, it becomes the owner's responsibility to change the "B" designation to a "P -Load Posted (signs in-place)." BIMU cannot change this code since we have no idea when posting signs are placed. The owner has to take the initiative to change NBI Item 41 designation.

Owners can change this information by either performing an Update report type in SIMS or completing this as part of the normal Routine Inspection report type. NBI 41 is one of the first fields that appear on the SIA-Edit form.

Initial Inspections

The National Bridge Inspection Standards require all bridges to receive an initial Team Leader inspection within 90 days from open to traffic date (180 days for non-state-owned bridges). To comply with this requirement, new bridges entered into SIMS will initially be set with a three month or six month inspection frequency. Once the initial inspection has been completed, all structures will move to a 24 month inspection frequency.

All inspection data must be entered and approved no later than February 15

If you do not meet the February 15 deadline, your agency is non-compliant per Minnesota Statutes 165.03, Subd.3. The State of Minnesota or MnDOT is ultimately responsible to assure our local agencies are in compliance with National Bridge Inspection Standards (NBIS) regulations. If any one of our local agencies is found to be non-compliant with the NBIS and proactive steps are not taken to fulfill NBIS regulations, the FHWA could withhold federal aid highway funds from the state

Update to Tech Memo for Pre-fabricated Pedestrian/Bicycle Bridge Superstructures

MnDOT has issued an updated technical memorandum 16-06-B-03, Use of Performance Specifications for Pre-fabricated Pedestrian/Bicycle Bridge Superstructures. Also, several associated supporting documents have been updated and can be found on the State Aid Bridge Information and Resources webpage under the Pedestrian and Bicycle Bridges section.

In summary, not much was changed in the submittal and acceptance process. Most of the changes were made to clarify the wording and update documents to better meet the requirements called for in the MnDOT Bridge Design Manual. One change of note has to do with the QC/QA process involved in the design of pedestrian bridges. Requirements have been added to the tech memo regarding the bridge fabricator's quality control/quality assurance process and Design Quality Management Plan (DQMP). These requirements have been added to help assure that only knowledgeable and experienced engineers are involved in the design and checking of each bridge and that only properly validated and checked software and spreadsheets are used in the design. In turn, this will help assure that the owner gets the high quality product that they deserve.

Currently there are no formal requirements established for the content of the DQMP, but our office, in cooperation with the Bridge Office, are working together in the development of these guidelines.

DEPARTMENT OF TRANSPORTATION

State Aid
Bridge

MnDOT Bridge Office

3485 Hadley Ave N., MS 610

Oakdale, MN 55128

http://www.dot.state.mn.us/stateaid/bridge/

Contacts:

Conkel, Dave
dave.conkel@state.mn.us
State Aid Bridge Engineer
651-366-4493

Homan, Brian
brian.homan@state.mn.us
State Aid Bridge Plans Engineer
651-366-4494

Dimaculangan, Moises
moises.dimaculangan@state.mn.us
State Aid Bridge Load Rating & Permitting Engr.
651-366-4522

Brown, Steve
steve.brown@state.mn.us
State Aid Bridge Sr. Bridge Plans Specialist
651-366-4495

DeWall, Petra
petra.dewall@state.mn.us
State Aid Bridge Hydraulics Engineer
651-366-4473

Joyce, Kevin
kevin.joyce@state.mn.us
State Aid Graduate Engineer
651-366-4548