DEPARTMENT OF TRANSPORTATION

Debonded Strands in Prestressed Concrete Bridge Girders

Catherine French, Principal Investigator
Department of Civil, Environmental, and Geo- Engineering
University of Minnesota

July 2019

Research Report
Final Report 2019-30

LRRB
LOCAL ROAD RESEARCH BOARD

To request this document in an alternative format, such as braille or large print, call 651-366-4718 or 1-800-657-3774 (Greater Minnesota) or email your request to ADArequest.dot@state.mn.us. Please request at least one week in advance.

Technical Report Documentation Page

1. Report No. MN/RC 2019-30	2.	3. Recipients Accession No.
4. Title and Subtitle Debonded Strands in Prestressed Concrete Bridge Girders		5. Report Date July 2019 6.
7. Author(s) Mahad Osman Catherine French		8. Performing Organization Report No.
9. Performing Organization Name and Address Department of Civil, Environmental and Geo- Engineering University of Minnesota 500 Pillsbury Drive S.E. Minneapolis, MN 55455-0116		10. Project/Task/Work Unit No. CTS #2018034 11. Contract (C) or Grant (G) No. (c) 1003325 (wo) 52
12. Sponsoring Organization Name and Address Local Road Research Board Minnesota Department of Transportation Office of Research & Innovation 395 John Ireland Boulevard, MS 330 St. Paul, Minnesota 55155-1899		13. Type of Report and Period Covered Final Report 14. Sponsoring Agency Code
15. Supplementary Notes http:// mndot.gov/research/reports/2019/201930.pdf		

16. Abstract (Limit: 250 words)

There are three potential options to reduce end stresses in prestressed concrete bridge girders: drape strands, debond strands, or a combination of the two. In the draping option, a portion of the strands are raised from harp points within the girder to reduce the strand eccentricity at the girder ends. Large vertical reactions are required at the hold down points within the girder to resist the uplift of the draped strands. In addition, end cracking that follows the draped strand pattern is often observed, particularly in deeper sections. In the debonding option, a portion of the strands are debonded toward the girder ends to reduce the resultant prestress force. Concerns with debonding are its potential to reduce shear strength and to cause corrosion issues if moisture and deicing chemicals make their way into the girder ends along the debonded path. Due to potential corrosion concerns, MnDOT has prohibited strand debonding. However, as a means to eliminate some of the end cracking observed during fabrication with draped strands, this study was conducted to explore the use of debonded strands and to develop design recommendations. To this end, an extensive literature review was conducted regarding debonded strand research, and state Departments of Transportation with similar climates and fabricators were queried to learn from their experiences. Design recommendations and potential material specifications to protect debonded strands from corrosion are presented in this report.

17. Document Analysis/Descriptors Girders, Cracking, Recommendations, Prestressed concrete bridges, Debonding,		18. Availability Statement No restrictions. Document available from: National Technical Information Services, Alexandria, Virginia 22312	
19. Security Class (this report) Unclassified	20. Security Class (this page) Unclassified	21. No. of Pages 159	22. Price

Debonded Strands in Prestressed Concrete Bridge Girders

FINAL REPORT

Prepared by:

Mahad Osman
Catherine French
Department of Civil, Environmental, and Geo- Engineering
University of Minnesota

July 2019

Published by:

Minnesota Department of Transportation
Office of Research & Innovation
395 John Ireland Boulevard, MS 330
St. Paul, Minnesota 55155-1899

This report represents the results of research conducted by the authors and does not necessarily represent the views or policies of the Minnesota Department of Transportation, Local Road Research Board, or University of Minnesota. This report does not contain a standard or specified technique.

The authors, the Minnesota Department of Transportation, Local Road Research Board, and University of Minnesota do not endorse products or manufacturers. Trade or manufacturers' names appear herein solely because they are considered essential to this report.

ACKNOWLEDGMENTS

Appreciation is expressed to the University of Minnesota students who have contributed to and completed substantial portions of this research project. These students include Joshua Pierce, who made significant contributions to the literature review and participated in the fabricator site visits and surveys, and Martin Ramaswamy, who also made notable contributions to the survey of other state highway agencies and summarized the design and construction specifications of these agencies.

This research project would not have been possible without the cooperation and valuable feedback of many state highway agencies and fabricators who previously implemented debonded strands in the field. The contributions of the individuals who participated in the surveys sharing their experiences and lessons learned are greatly appreciated.

Finally, appreciation is expressed for the time and effort contributed by the MnDOT Technical Advisory Panel (TAP) members, who have been actively involved in this project from the start. Their diligent review and comments on project deliverables at each stage were instrumental in advancing the study and in publishing a well-vetted final report. TAP members for this research project included the following individuals:

- Brian Homan (technical liaison)
- Lisa Jansen and David Glyer (administrative liaisons)
- Braden Cyr
- Stephen Grover
- Jemal Jeju
- John Ekola (Hennepin County)

Thank you to everyone mentioned above for their contributions and to all others not mentioned by name but who were key to making this project a reality.

TABLE OF CONTENTS

CHAPTER 1: Introduction **1**

1.1 Background 1

1.2 Research Approach 5

CHAPTER 2: Literature review of past research work **6**

2.1 Shear Design with debonded strands 6

2.2 FlexurAL design with debonded strands 9

2.2.1 Strand Bond Slippage with Debonded Strands 10

2.3 Splitting Resistance and Confinement Reinforcement 12

2.3.1 End stresses terminology 12

2.3.2 Splitting Resistance Reinforcement 14

2.3.3 Confinement Reinforcement 15

2.4 Other Literature Review Findings 19

CHAPTER 3: Survey of fabricators and state DOTS **20**

3.1 Survey of fabricators 20

3.1.1 Production of girders with debonded strands 22

3.2 Survey and review of state DOT design guidelines and specifications 24

3.2.1 Industry practice on debonding limits 25

3.2.2 Increasing use and popularity of debonded strands 26

3.2.3 Splitting resistance methods 27

3.2.4 Strand Release Pattern 28

3.2.5 Methods of strand corrosion protection and sheathing 28

CHAPTER 4: Performance of girders with debonded strands **30**

4.1 Improved aesthetics 31

CHAPTER 5: Conclusions and Recommendations **32**

5.1 Debonding Limits 32

5.2 Corrosion Protection Methods 33

5.3 Strand Sheathing Method 35

5.4 Strand Release Pattern 37

5.5 Splitting Resistance reinforcement 38

5.6 Confinement Reinforcement 39

5.7 Concluding Remarks and Significance of Findings 40

5.8 Future Research work 40

REFERENCES 41

APPENDIX A Summary of key references

APPENDIX B Summary of survey of local bridge producers and inspectors

APPENDIX C Summary of survey of other state highway agencies

APPENDIX D Survey follow-up sample detail sheets and special provisions

APPENDIX E Summary of other state highway agencies' design guidelines and specifications

APPENDIX F Summary of recommendations

LIST OF FIGURES

Figure 1-1: Draped strands (MoDOT Engineering Policy Guide) 2

Figure 1-2: Girder with debonded strands (Shahrooz et al. 2017) 4

Figure 1-3: Strand debonded with flexible split-sheathing tube 4

Figure 2-1: Forces assumed in resistance model caused by moment and shear near end of prestressed concrete girder (NCHRP Report 849 and AASHTO (2017) LRFD 8th edition) 7

Figure 2-2: Normalized peak loads with respect to predicted capacity of different girder types with varying percentages of debonding ratios 9

Figure 2-3: Location of Spalling and Bursting Stresses (French et al. 2011) 13

Figure 2-4: Spalling, bursting, and prestress force near the end zone of prestressed members (French et al. 2011) 13

Figure 2-5: Lateral splitting failure (NCHRP Report 849) 16

Figure 2-6: STM - transverse tension tie (NCHRP Report 849) 16

Figure 2-7: Strut and Tie Method (NCHRP Report 849) 18

Figure 3-1: Web cracking observed during the production of MnDOT girders. 21

Figure 3-2: Image of spalling that occurred during the release of the outer strands on a 36M girder at County Materials in Roberts, WI 22

Figure 3-3: Bursting plate device used in IDOT, Illinois Tollway, and MoDOT girders. Image courtesy of County Materials 23

Figure 3-4: State highway agencies allowing debonding and preference of debonding versus draping ... 25

Figure 3-5: Percent of debonded strands specified by state highway agencies 26

Figure 5-1: Exposed strand ends treated with silicone sealant (Photo courtesy of IDOT) 34

Figure 5-2: SCDOT's corrosion protection method on debonded strands 34

Figure 5-3: Single split-sheathing tube (ALP Supply) 36

Figure 5-4: Double split-sheathing tube method 36

Figure 5-5: Silicone sealant applied within the beam form (Photo courtesy of IDOT) 37

LIST OF ABBREVIATIONS

AASHTO	American Association of State Highway and Transportation Officials
DOT	Department of Transportation
MnDOT	Minnesota Department of Transportation
NDOR	Nebraska Department of Roads
MDOT	Michigan Department of Transportation
MoDOT	Missouri Department of Transportation
IDOT	Illinois Department of Transportation
Illinois Tollway	Illinois State Toll Highway Authority
NYSDOT	New York State Department of Transportation
Iowa DOT	Iowa Department of Transportation
NDDOT	North Dakota Department of Transportation
SDDOT	South Dakota Department of Transportation
WisDOT	Wisconsin Department of Transportation
KDOT	Kansas Department of Transportation
SCDOT	South Carolina Department of Transportation
TxDOT	Texas Department of Transportation
NCHRP	National Cooperative Highway Research Program

EXECUTIVE SUMMARY

This research project evaluated the viability of using debonded strands as a design option for the Minnesota Department of Transportation (MnDOT) to eliminate some of the end cracking observed in prestressed concrete girders during fabrication. MnDOT currently relies solely on the use of draped strands to reduce end stresses in prestressed concrete beams. There are a number of concerns that have been expressed regarding the use of draped strands, which are discussed in this report. Examples of concerns include observations of inclined end cracking associated with draping and safety issues associated with anchorage failure of hold down devices. Some state highway agencies and fabricators would like to see a limit on the maximum number of strands that may be draped. Thus, the use of debonded strands as an alternative to or in conjunction with draping was explored to reduce end stresses and end cracking in prestressed concrete bridge girders.

VIABILITY OF DEBONDED STRANDS AS A DESIGN OPTION IN MINNESOTA

Based on the literature reviewed and queries of other state highway agencies, there are various guidelines and practices presented by researchers and implemented by state DOTs with regard to the use of debonded strands. Over time, different researchers have published diverse guidelines on the use of debonded strands, specifically with regard to the maximum percentage of strands that may be debonded in a girder. Early work by Shahawy et al. (1993) suggested that debonding should be limited to 25 percent of the total strands, as experimental testing on full-scale girders with 40 percent of strands debonded resulted in inadequate shear capacity of girders. This research led to the current AASHTO (2017) LRFD limit of 25 percent of total strands that may be debonded. Later research by Barnes et al. (1999) suggested that up to 75 percent of the total strands can be debonded by ensuring that slippage of the debonded strands is prevented under the ultimate strength limit state and by following AASHTO rules for terminating tensile steel to ensure there is adequate shear capacity in the end region of girders. As a result of these research reports, state highway agencies use a wide range of debonding percentages.

Eleven state highway agencies from ten different states were surveyed as part of this project. These states included Michigan, New York, Nebraska, Illinois, Wisconsin, North Dakota, South Dakota, Iowa, Kansas, and Missouri. Illinois had two highway agencies, the Illinois Department of Transportation and Illinois Tollway, which were both surveyed. Most of the states surveyed adhered to the current AASHTO limit of 25 percent of the total strands that can debonded, while some states like Nebraska and Michigan allowed up to 30 and 40 percent debonding of total strands, respectively. One state highway agency (i.e., Texas), which was not surveyed, permitted debonding up to 75 percent of total strands based on a review of the state's bridge design guidelines and specifications. The current AASHTO (2017) LRFD limit of 25 percent is not a strict requirement, as AASHTO cites that states may consider the use of higher debonding percentages based on successful past projects and by thoroughly investigating the

shear resistance in the end regions of girders with due regard to the reduction in horizontal tension tie force that is available when strands are debonded.

Despite variations with regard to the detailing of girders with debonded strands in research and practice, the findings consistently support the use of debonded strands as a feasible option in reducing end stresses and end cracking in prestressed concrete bridge girders. The performance of girders with debonded strands is also considered to be predictable and safe.

In light of recent research by Shahrooz et al. (2017) (NCHRP Report 849) as well as consideration of the other literature reviewed, it is recommended that MnDOT allow up to 60 percent of the total strands to be debonded in prestressed bridge girders as a means of reducing end stresses. Shahrooz et al. (2017) suggested that debonded strands should be permitted on up to 60 percent of the total strands based on successful experimental results, given that additional longitudinal mild steel is provided to satisfy longitudinal reinforcement requirements. The additional mild reinforcement contributes to the shear capacity of members by serving as a tension tie. It was confirmed in NCHRP Report 849 (Shahrooz et al. 2017) that the debonded girders tested by Shahawy et al. (1993) did not meet the longitudinal reinforcement requirement of AASHTO (2017) LRFD Article 5.7.3.5. The test girders in the Shahawy experiments were designed using 1989 AASHTO specifications and the provisions to check for the tensile capacity of the longitudinal reinforcement in the end region of girders were only later introduced into AASHTO specifications in the 1990s. Shahrooz et al. as well as other researchers (e.g., Ross 2012) reported that it is more rational to limit debonding based on the total number of bonded steel bars and strands (i.e., mild and prestressed strands) that satisfies the AASHTO (2017) LRFD end region longitudinal reinforcement requirement in lieu of limiting debonding to 25 percent based on inadequate shear capacity.

It is recommended that MnDOT start with 40 percent debonding of total strands and increase debonding incrementally up to the maximum of 60 percent. This will allow MnDOT to develop some experience with debonding before going to the higher debonding percentage, as MnDOT has not allowed debonding in the past. The proposed initial debonding limit further leads to practicality in design by reducing the likelihood of needing additional mild longitudinal steel to satisfy longitudinal reinforcement requirements, where the highly prestressed girders used by MnDOT may not have the capacity to accommodate this additional steel.

The use and implementation of debonded strands in Minnesota should also not eliminate the use of draped strands. These two methods can be used in conjunction as two complementary methods to reduce end stresses. It is recommended that the number of draped strands be limited to a maximum of eight (8) strands as too many draped strands can cause inclined cracking, as well as safety hazards. One of the benefits of draped strands is that the vertical component of the prestress force in those strands can improve the shear capacity of girders in end regions.

END REGION DETAILING OF GIRDERS

In addition to recommendations on the maximum number of strands that may be debonded or draped within a girder cross section, other end region detailing of girders was explored to reduce end cracks. Design guidelines are provided in this report with regard to splitting resistance reinforcement and confinement reinforcement at girder end regions in conjunction with the use of debonding. Several states have found end region girder detailing (i.e., splitting resistance reinforcement) to be the most effective method to reduce end cracking.

MnDOT's current method to address splitting resistance is to provide transverse reinforcement to resist 4 percent of the prestressing force. This reinforcement is placed within h/4 (where h is the height of the beam), but MnDOT allows this reinforcement to be placed beyond h/4 in an effort to provide realistic spacing to place concrete in heavily reinforced sections. A change to MnDOT's splitting resistance reinforcement method is recommended in this report, where 50 percent of the required splitting resistance steel is placed within h/8 and the remainder of the steel is spread out from h/8 to h/2 from the end of the girder. Because most of the splitting (or spalling) stresses occur at the very end of the girder, this will have the most effective crack control with the least amount of steel (Hasenkamp et al., 2008). In addition, when this method is used in conjunction with debonded strands, the required amount of splitting resistance reinforcement will be reduced due to the reduced prestressing force at the end of the girders. This will further lead to end regions that are less congested with reinforcement to facilitate the placement of concrete.

No changes to MnDOT's current confinement reinforcement requirements are recommended. Researchers (i.e., Shahrooz et al., 2017; Ross, 2012) have suggested that AASHTO's minimum confinement reinforcement requirements may not be conservative or adequate for a few girder geometries (i.e., wider bottom flanges) to resist a lateral splitting failure of the bottom flange at the ultimate strength limit state. MnDOT typically provides an embedded steel sole plate in bridge girders. This embedded steel sole plate is expected to provide additional confining capacity and will resist any potential lateral splitting failures at ultimate strength limit states in cases where debonded strands are used and otherwise. MnDOT may continue to use AASHTO (2017) Article 5.9.4.4.2 for confinement reinforcement.

FABRICATION AND MATERIAL SPECIFICATIONS

Guidelines related to the fabrication process and potential material specifications were developed to use in conjunction with the implementation of debonded strands. These include the types of sheathing material to use to achieve debonding, corrosion protection methods, and recommended strand release patterns.

An oversized double split sheathing tube method is recommended over two other alternatives (i.e., single split-sheathing and preformed/rigid sheathing tubes). Double split-sheathing provides effective debonding while maintaining ease of use in the fabrication process. The preformed/rigid sheathing tube is more difficult to use in production, while the single-split sheathing does not appear to provide

effective debonding (Burgueno & Sun, 2011). The use of a single split-sheathing tube leads to a tight contact between the strand and concrete and thus, some mechanical anchorage may be created between the strand and the concrete as well as stresses introduced into the concrete in the end regions as a result of strand dilation during prestress strand release. In the past, Michigan has used single split-sheathing, but an improved performance in terms of cracking has been observed with the use of an oversized sheathing tube (i.e., preformed rigid sheathing tube).

An update was recommended to MnDOT's strand release pattern in conjunction with the use of debonded strands. As an additional note to the strand release pattern used by the fabricator, debonded strands should be released after all fully bonded strands have been released, in sequence from strands with the shortest debonded length to longest debonded length. Several advantages are associated with this method, including that it reduces the risk of concrete corner spalling that fabricators have observed with MnDOT girders. Other benefits of this method, which are discussed later in this report, include that the final strands released (i.e., longest debonded strands) will introduce less restraining stress in the girder before they are cut because they have the longest free length between girders.

With regard to the corrosion protection of girders with debonded strands, the use of silicone sealant is recommended to seal both the debonded strands and sheathing material at the end surface of girders. The use of sheathing materials to wrap the strands creates a void between the strand and concrete, which is susceptible to chloride ingress from deicing agents. The voids at the end surface of girders created by the sheathing should be sealed with silicone.

Care should be taken when applying the silicone sealant to ensure it remains intact prior to shipment of the girders from production facilities. The use of a low modulus of elasticity silicone sealant that is light (or white) in color is recommended. This method of corrosion protection for use with debonded strands should be used in addition to MnDOT's existing methods of corrosion protection such as painting the end surfaces of girder with material from MnDOT's approved products list.

IN-SERVICE PERFORMANCE OF DEBONDING AND SIGNIFICANCE OF RESEARCH FINDINGS

The performance of in-service girders with debonding was reviewed in terms of long-term deterioration and exposure to corrosive conditions. The long-term performance of girders with debonded strands was considered to be adequate based on responses of fabricators and state DOTs that have implemented debonded strands for a range of periods, 3 years to more than 40 years, including Michigan. These fabricators and state DOTs reported that there was no significant difference in the long-term deterioration and corrosion of girders with debonded strands compared to girders without debonded strands.

The use of debonded strands is, therefore, considered safe and reliable as evidenced by the performance of full-scale girders tested by Shahrooz as well as the performance of girders with debonding that have been in service for more than 40 years.

The use of debonded strands leads to a safer and easier fabrication process compared to draped strands. This could lead to potential cost savings for Minnesota as a result of lower labor costs

associated with debonding and does not require specialized equipment such as hold down devices needed to anchor draped strands at harp points. It does, however, require additional time to apply and seal the sheathing and place supplementary longitudinal reinforcement when required. An increase in safety and constructability in the production of prestressed bridge girders is made possible with the use of debonded strands and by limiting the number of draped strands, as pulling more than eight strands through a single hold down point can cause the strands to bind due to friction. These current conditions make producing bridge girders more difficult, and the use of debonded strands facilitates ease of fabrication.

CHAPTER 1: INTRODUCTION

1.1 BACKGROUND

High tensile and compressive stresses are often present in the end regions of prestressed concrete bridge girders due to high ratios of prestressing strand to cross-sectional areas. As a result, bridge girders can be susceptible to end cracking during fabrication, where the prestress force from the strands are introduced into the concrete at the time of prestress strand release. The American Association of State Highway and Transportation Officials (AASHTO) LRFD Bridge Design Specifications recommend that end stresses at the extreme fiber tensile and compressive locations of girders (including midspan and end regions) be limited to certain stress values, which can be calculated as a function of the concrete strength at prestress release (i.e., initial concrete strength f'_{ci}).

One way to accommodate higher end stresses in prestressed bridge girders is to use a higher initial concrete strength (f'_{ci}). In fabrication, however, it can take time for concrete to gain strength and concrete typically requires 28 days to achieve approximately 99 percent of its compressive strength. Leaving prestressed girders in precasting beds for days to achieve a higher initial concrete strength can be costly. Thus, there is a practical limit on the initial concrete strength (f'_{ci}) that may be used in design.

Common industry practice to reduce end region stresses is the use of draped strands. Draping requires that some of the strands within the girder be raised to reduce strand eccentricity. Reducing strand eccentricity enables control of the end stresses by reducing the moment arm of the prestressing force, locating the prestressing force closer to the center of gravity of the girders. Draping is limited to strands

within the beam web width. Many highway agencies, including the Minnesota Department of Transportation (MnDOT) primarily use this method to reduce end stresses.

As shown in Figure 1-1, draping is achieved by mechanically deflecting some of the stressed strands in the precasting beds to achieve the required eccentricity using hold-down and hold-up devices prior to casting.

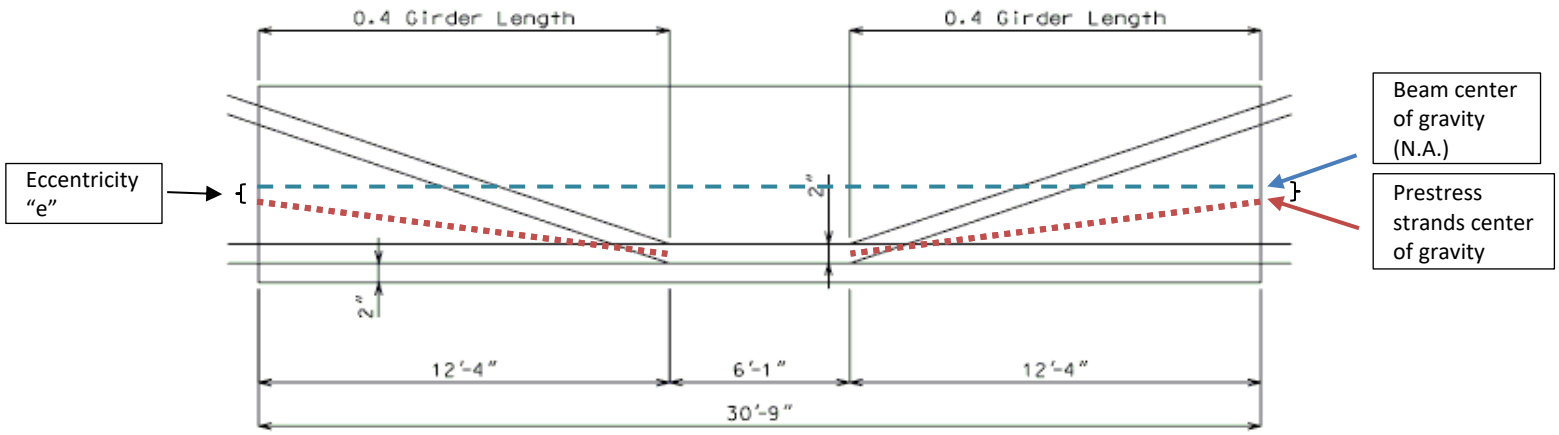

Figure 1-1: Draped strands (MoDOT Engineering Policy Guide)

The extreme fiber tensile and compressive stresses (top and bottom of concrete beam stresses) are governed by Equations 1-1 and 1-2, respectively.

$$\sigma_t = \frac{P}{A} \pm \frac{Pe}{S_t} \pm \frac{M}{S_t}$$ **Equation 1-1**

$$\sigma_b = \frac{P}{A} \pm \frac{Pe}{S_b} \pm \frac{M}{S_b}$$ **Equation 1-2**

where:
σ_t and σ_b are extreme fiber stresses at the top and bottom of girder, respectively
P is the initial prestressing force,
A is the girder cross-sectional area,
S_t and S_b are the top and bottom sectional moduli, respectively
e is the eccentricity, which is the distance between the beam N.A and center of gravity of prestressing strands, and
M is the moment due to the beam self-weight.

As the eccentricity (e) reduces, the top and bottom extreme fiber stresses at the beam ends reduce due to a smaller moment arm applied to the girder by the prestressing force.

There are some disadvantages and concerns with draping as expressed by researchers, bridge fabricators, and state DOT inspectors. One of the disadvantages of this method is that precast fabricators may not have suitable equipment to achieve all drape profiles or the required hold-down device capacity. Precast fabricators have expressed safety and constructability issues associated with the use of draped strands, which is further discussed later in this report. Although draping reduces end stresses and some end region cracking, draping further leads to the potential for inclined cracking along the draped strands (Okumus and Pinar 2014).

An alternative method to draping strands is debonding strands toward the end regions of the girders to reduce the end stresses by reducing the prestressing force in those sections (refer back to Equations 1-1 and 1-2). This method has been used by several state highway agencies. The AASHTO (2017) LRFD Bridge Design Specifications also provide guidelines for this alternative method. Debonded strands can be achieved by blanketing or wrapping a portion of the prestressed strands over a short and limited

distance with sheathing, as demonstrated in Figure 1-2 and Figure 1-3. The intent of the sheathing tube is to prevent the strand from forming a bond with the concrete.

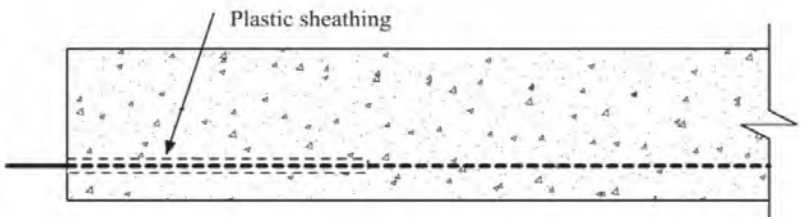

Figure 1-2: Girder with debonded strands (Shahrooz et al. 2017)

Figure 1-3: Strand debonded with flexible split-sheathing tube

One of the advantages of using debonded strands is that it simplifies the production of girders by allowing the use of straight strands. The use of hold-down devices is not required for debonded strands to reduce end stresses as is required for draped strands. With the use of debonding, there is also a potential for cost savings by simplifying the fabrication process, although it does require additional time to apply and seal the sheathing and place supplementary longitudinal reinforcement when required. A concern with debonded strands is that they may lead to long-term corrosion issues if moisture and deicing chemicals make their way into the beam end from the debonded area surrounding the strands. Another issue of concern with the use of debonding is that it could reduce the shear capacity of girders in the end regions. Bonded longitudinal reinforcement contributes to shear resistance by serving as a tension tie resisting the horizontal component of the compressive strut produced by vertical loads.

MnDOT currently relies solely on draping strands to reduce end stresses. This research project investigates the feasibility of implementing debonded strands in Minnesota. A particular issue of interest was the experience of other states with similar climates to that of Minnesota that have implemented debonding. The successful implementation of debonding in such states may alleviate

MnDOT's concerns regarding potential for corrosion and chloride ingress inside the sheathing of debonded strands.

1.2 RESEARCH APPROACH

This project investigated the feasibility of implementing debonded strands to ensure it would not result in a reduction in service life due to potential corrosion issues or reduction in safety due to reduction in shear resistance. To determine the viability of the debonded option, existing literature was reviewed. Surveys and site visits to fabrication plants were conducted. State highway agencies were also queried regarding their experience with debonded strands. Furthermore, design guidelines and construction specifications of state highway agencies were reviewed related to debonded strands. Based on all of this information, recommendations were developed for the use of debonded strands by MnDOT including the design constraints under which they may be used.

CHAPTER 2: LITERATURE REVIEW OF PAST RESEARCH WORK

A review of the literature on debonded strands and end region cracking included a review of published work on various design topics including shear resistance at the ends of girders. Over 30 research papers were reviewed, to investigate the effects of debonding on shear capacity as well as other design parameters.

Various numerical and experimental studies over the past three decades have established that debonding is beneficial in reducing end stresses, and subsequently end cracking in bridge girders. Among these studies are early numerical work by Kannel, French, and Stolarski (1997), which mainly focused on release methodology of prestressing strands, but also reported that debonding strands for a short distance reduces end stresses through experimental programs. Later numerical studies by Okumus and Oliva (2013) also reported that debonding is effective in controlling end cracks and is more effective for some crack types than the use of draped strands. Furthermore, experimental research carried out by Ross et al. (2014) compared the use of debonded strands to other girder end region detailing (i.e., large diameter vertical reinforcement, vertical end-region post-tensioning, and end reinforcement with AASHTO LRFD specifications). A girder detailed in accordance with the AASHTO (2010) LRFD specifications was designated as the control specimen to evaluate the impact of these three other details on observed cracking. Ross et al. (2014) reported the use of debonding of 45 percent of total strands was more effective and observed smaller crack lengths and widths with debonding compared to the other end region detailing. Although these research studies establish and highlight the benefits of debonded strands in controlling end cracking, debonding can have negative impacts in other areas of design such as shear and flexural capacity.

One of the main focuses of this report is on the detailing of girder end regions with debonded strands and its implications on design. The findings of the literature review have been categorized into four main design topics – shear, flexure, splitting resistance, and confinement reinforcement as the use of debonding can potentially affect these design categories in bridge girders. Key findings of the various research articles reviewed are highlighted below and further discussed.

2.1 SHEAR DESIGN WITH DEBONDED STRANDS

The current AASHTO (2017) LRFD Bridge Design Specifications limit debonded strands to 25 percent of the total number of strands. This AASHTO specification refers to experimental research performed by Shahawy et al. (1993) and limits debonding to 25 percent due to inadequate shear capacity of test girders in which 40 percent of strands were debonded.

The experimental girders tested by Shahawy et al. (1993) were designed using 1989 AASHTO specifications. Since then, AASHTO guidelines have been modified to include a check for the tensile capacity of the longitudinal reinforcement, which contributes to the shear capacity of members by serving as a tension tie.

AASHTO (2017) LRFD Bridge Design Specification equations 5.7.3.5-1 and 5.7.3.5-2 given here as Equations 2-1 and 2-2, along with Figure 2-1, demonstrate that longitudinal reinforcement is necessary to resist shear forces and contribute to the shear performance of girders. This longitudinal reinforcement can be either prestressed or nonprestressed mild reinforcement.

$$A_{ps}f_{ps} + A_s f_y \geq \frac{|M_u|}{d_v \phi_f} + 0.5\frac{N_u}{\phi_c} + \left(\left|\frac{V_u}{\phi_v} - V_p\right| - 0.5V_s\right)\cot\theta \qquad (5.7.3.5\text{-}1)$$

Equation 2-1

$$A_s f_y + A_{ps} f_{ps} \geq \left(\frac{V_u}{\phi_v} - 0.5V_s - V_p\right)\cot\theta \qquad (5.7.3.5\text{-}2)$$

Equation 2-2

where:
A_s is the area of mild steel,
f_y is the yield stress at the section of interest,
A_{ps} is the area of bonded prestressing steel,
f_{ps} is the stress in the prestressing steel,
V_u and M_u are the applied factored shear and moments at the section of interest, respectively
V_s is the shear resistance provided by vertical reinforcement, and
V_p is the vertical component of prestress force (i.e., draped strands).

Figure 2-1 confirms that prestressing strands debonded toward the end of the girder section reduce the tension tie in a strut and tie model at the support.

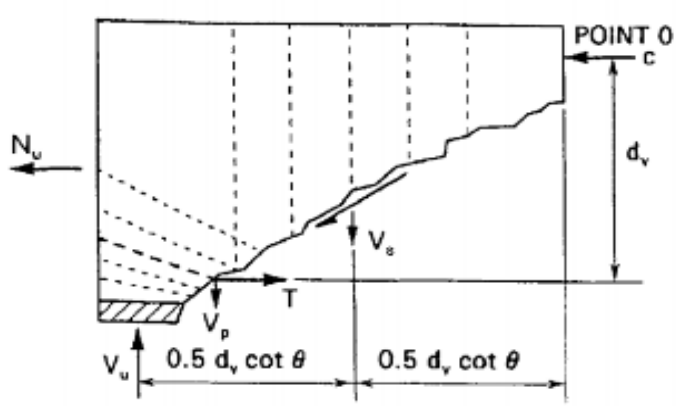

Figure C5.7.3.5-1—Forces Assumed in Resistance Model Caused by Moment and Shear

Figure 2-1: Forces assumed in resistance model caused by moment and shear near end of prestressed concrete girder (NCHRP Report 849 and AASHTO (2017) LRFD 8th edition)

AASHTO (2017) LRFD currently limits debonding to 25 percent based on the findings of Shahawy et al. (1993). However, it was pointed out by other researchers (i.e., Collins and Mitchell 1997) and confirmed in NCHRP Report 849 (Shahrooz et al. 2017) that the debonded girders tested by Shahawy et al. (1993) did not meet the longitudinal reinforcement requirement of AASHTO (2017) LRFD Article 5.7.3.5. Thus, limiting debonding to 25 percent does not appear to be justified if the current AASHTO longitudinal reinforcement requirements are satisfied. Shahrooz et al. (2017) suggests that debonded strands should be permitted up to 60 percent of total strands based on experimental results, given that sufficient longitudinal steel is provided to satisfy longitudinal reinforcement requirements.

The design approach taken by NCHRP Report 849 on the use of additional mild longitudinal steel to accommodate any deficiency in shear capacity introduced by debonding strands is also consistent with the assessment of other researchers (Ross 2012 and Barnes et al. 1998). These authors reported that it is more rational to limit debonding according to the total number of bonded strands required to provide the necessary end region longitudinal reinforcement requirement.

Through a numerical study where over 500 girder cases were studied, Shahrooz et al. (2017) concluded that relatively few reinforcing bars were found to be necessary to remedy the tensile strength deficiency resulting from partially debonded strands. For a variety of girder sizes and shapes, the required number of nonprestressed reinforcement bars was determined for cases in which up to 77 percent of strands were debonded. For example, a maximum of nine No. 4 Gr. 60 bars were required for AASHTO Type IV girders in the numerical study.

Experimental testing on full-scale girders was carried out by Shahrooz et al. (2017) for girders with up to 60 percent of total strands debonded. The test results validated that debonding was not detrimental to the performance of girders at service and ultimate strength limit states, as long as sufficient steel is provided to satisfy longitudinal reinforcement requirements.

Figure 2-2 summarizes the failure loads of six full-scale test girders, with varying levels of debonding at each end (from 10-60%) for a total of twelve girder end regions tested in shear. Regardless of the amount of debonding, all girder cases reached capacities greater than the predicted or calculated capacities. Only two girder cases were loaded to their predicted capacity and not loaded to failure to allow for testing of the other girder end (i.e., Texas U-40 girder) or to avoid an explosive failure due to the high capacity of the NU-1100 girder.

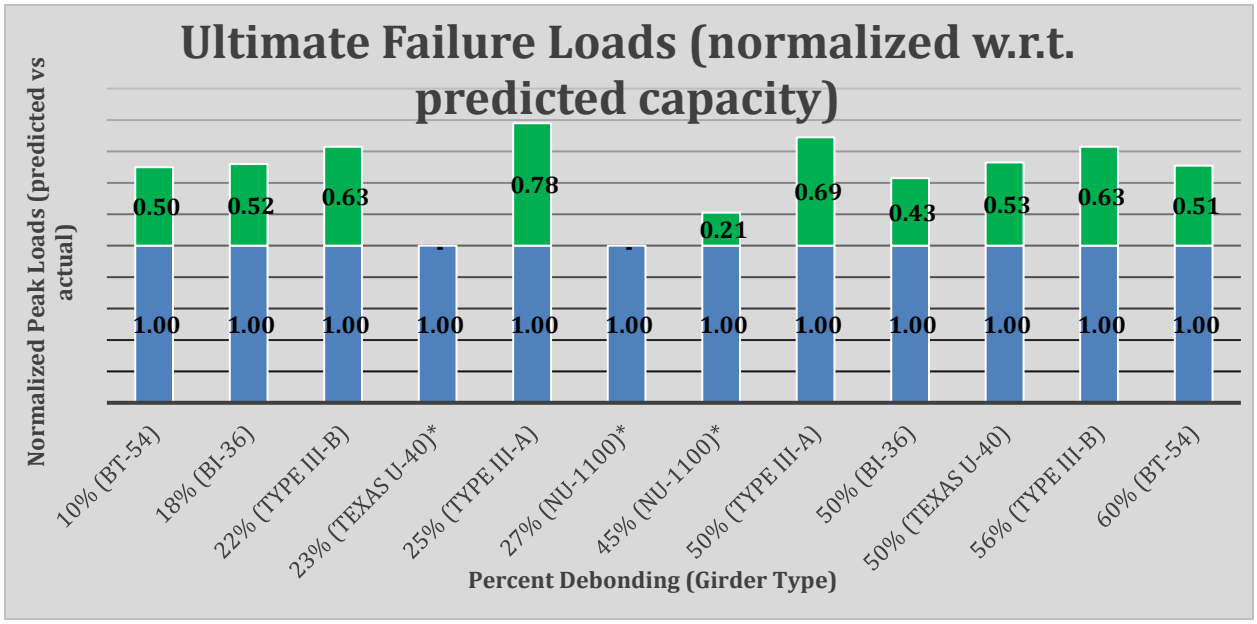

Figure 2-2: Normalized peak loads with respect to predicted capacity of different girder types with varying percentages of debonding ratios

Ultimately, all test girders reached or exceeded their predicted capacities, given that the required amount of longitudinal reinforcement was provided to satisfy AASHTO (2017) LRFD equations 5.7.3.5-1 and 5.7.3.5-2. Large debonding ratios also did not negatively impact the deformation ductility of girders. In the experimental girders, none of the tests with a higher debonding ratio resulted in a lower beam deflection compared to tests with a lower debonding ratio for the same girder. In a few cases in the test girders, the end with the higher debonding ratio achieved a greater deflection at peak loading.

2.2 FLEXURAL DESIGN WITH DEBONDED STRANDS

The potential impact of debonded strands on flexural design of prestressed girders was reviewed. Regarding flexural design with debonded strands, AASHTO (2017) LRFD design specifications require that the development length for debonded strands to be calculated with a k factor of 2 instead of factors of 1 and 1.6 for fully bonded strands depending on girder depth. This k factor of 2 for debonding was originally recommended in research by Kaar and Magura (1965). Other researchers such as Barnes et al. (1999) believe this factor may be unnecessary if the development of the debonded strands is uninterrupted by cracking.

Research by Barnes et al. (1999) was related to the development length of 0.6-in. diameter prestressing strand in I-shaped pretensioned girders. Barnes et al. reported that partial debonding of strands decreases the capacity of the longitudinal reinforcement particularly when cracks pass through the transfer length of debonded strands.

A variety of debonding percentages were evaluated and tested to determine their pull-out capacities and to study the anchorage behavior of debonded strands. Barnes et al. concluded that up to 75 percent debonding may be used under two conditions. Bond slippage must be prevented near the transfer length of the debonded strands and ACI/AASHTO rules for terminating tensile steel should be applied to the bonded length of the prestressing strand (i.e., currently AASHTO Article 5.10.8.1.2). The first rule suggested by Barnes et al. (i.e., preventing strand bond slippage) addresses the potential impact of strand bond slippage on the flexural capacity of members with debonded strands, while the second rule (i.e., AASHTO rules for terminating tensile steel) is partially associated with resisting shear at the cutoff points of debonded strands. The provisions of AASHTO (2017) Article 5.10.8.1.2 related to shear at the termination points of tensile steel are now supplemented by AASHTO (2017) Article 5.7.3.5 on longitudinal reinforcement requirements, which considers the need to provide longitudinal reinforcement to resist shear by serving as a horizontal tension tie. AASHTO (2017) Article 5.7.3.5 on longitudinal reinforcement requirements may be adhered to in lieu of AASHTO (2017) Article 5.10.8.1.2 for terminating flexural reinforcement in a tension zone.

The report further stated that bond slippage can be avoided by preventing cracking inside the transfer length and within $20d_b$ of the transfer length of the debonded strands (where d_b is the diameter of strand). Formulae and expressions were provided limiting tensile stresses in the extreme fiber (edge) of the girder under ultimate loading such that cracking is precluded in this region.

For members such as I-beams, U-beams, or box beams which contain debonded strands within the bottom flange, Barnes et al. suggests that the tensile stress at the extreme fiber should be limited to a value equal to $6\sqrt{f_c'}$, and the principal tensile stress at the junction of the web and the flange containing the strands should be limited to $4\sqrt{f_c'}$ (in psi units). For other members, the principal tensile stresses in this region should be limited to $4\sqrt{f_c'}$ (in psi units) between the centroid and the extreme tensile fiber.

The equations and formulas presented by Barnes et al. to ensure bond slippage is prevented may not be required when debonding is limited to 60 percent, and the suggested cross-sectional debonding patterns are utilized. Shahrooz et al. (2017) reported that the ends of the experimental girders with more debonding had a higher measured strand slip at ultimate loads. Shahrooz et al. also reported that strand bond slippage was not a detriment to ultimate capacity of girders, and therefore not an issue for girders with up to 60 percent of strands debonded.

2.2.1 Strand Bond Slippage with Debonded Strands

Other research relevant to flexural design and strand bond slippage was reviewed including Ross et al. (2014), which commented on the potential for strand slippage as a result of using debonding. Ross et al. (2014) reported debonding was an effective method of controlling end cracks after prestress release in comparison with three other end region girder detailing methods for I-shaped girders (i.e., use of large vertical reinforcing bars, vertical post-tensioning at the ends, and a control specimen designed with AASHTO (2010) LRFD specifications). However, the strands in the debonded girder began slipping at

lower loads and slipped a greater distance than did strands in the other specimens under applied loading. Peak load in the debonded girder corresponded to a strand slip event, and failure of the shielded specimen was categorized as a shear-bond failure. It is worth noting that no additional mild longitudinal steel was used in the girders tested by Ross et al. (2014).

The observations of Ross et al. (2014) that debonded strands have the potential for greater strand slippage is consistent with the experimental findings of Shahrooz et al. (2017). However, Shahrooz et al. (2017) as well as other research (i.e., Russell et al. 2003) go further to suggest that shear-bond failure is not a valid reason to limit debonding, as long as adequate longitudinal reinforcement is provided.
To understand the potential impact of strand slippage on flexural capacity of girders, a research study by Briere et al. (2013) was reviewed which was based on experimental findings of Kasan and Harries (2011) where they considered the case of prestressing strands severed along the length of a beam due to vehicular impact or other damage. This research “demonstrated that severed or otherwise damaged strands do, in fact, 'redevelop' their capacity away from the damage.”

Therefore, each individual strand that slips under any applied loading can redevelop their capacity over a transfer length once strands re-enter sound concrete. This redevelopment of flexural capacity in strand bond slippage can potentially lead to more ductile girders. This was observed in one of the girders tested by Shahrooz et al. (2017) where the girder with a higher debonding percentage (i.e., 50%) resulted in a greater deflection at the peak load compared to the girder with a lower amount of debonding (i.e., 18%). In both cases, the actual failure loads were greater than the design or predicted loads, but the end with the lower amount of debonding obtained a greater peak load in this case. Similarly, Russell et al. (1994) through experimental testing also observed that strand bond failures in beams with debonded strands resulted in ductile failures, even though their nominal capacity was reduced by anchorage failure. Russell et al. reported that one test girder case failed at 91 percent of the nominal flexural capacity due to flexural cracks extending into the transfer zone of debonded strands, which led to strand bond failures. It is worth noting, however, that these test girders had the innermost and outermost strands debonded, which is not recommended in AASHTO (2017) LRFD Bridge Design Specifications as well as other research publications such as NCHRP Report 849. Testing on three other girders with staggered debonding resulted in flexural capacities greater than predicted capacity despite strand slippage occurring. This is consistent with experimental research by Rabbat et al. (1979) where significant strand slips were measured, but the beams were able to develop their ultimate load.

Russell et al. (1994) ultimately reported that for most simply-supported beams, flexural cracking in the transfer zone of debonded strands is effectively eliminated if the debonding length does not extend from the end of the beam more than 15 percent of the span. Bond slippage can be avoided by preventing cracking inside the transfer length and within 20db of the transfer length of the debonded strands.

Also, in order to achieve a better strand bond capacity with the use of debonded strands, Russell et al. (1994) suggested that staggered debonding should be employed by limiting the percent of debonded strands that may be terminated in a section. Concurrent debonding (i.e., termination of debonded

strands at one section along the beam length) can lead to bond failures whereas staggered debonding along the length of the beam will not. Concurrent debonding results in a lower cracking moment in the transfer zone of debonded strands compared to the use of staggered cutoff points. This is consistent with recommendations by others (e.g., Shahrooz et al. 2017) and AASHTO LRFD Bridge Design Specifications in which no more than 40 percent of debonded strands may be terminated in any section.

Ultimately, experimental research by Shahrooz verified that strand bond slippage was not detrimental to the ultimate capacity of girders, provided that recommended cross-sectional debonding patterns were adhered to (e.g., staggered debonding along the length of the beam) and that no more than 60 percent of the strands were debonded, which is the maximum percent of debonded strands tested by Shahrooz.

2.3 SPLITTING RESISTANCE AND CONFINEMENT REINFORCEMENT

In addition to reviewing literature on the impact of debonded strands on shear, flexure, and bond slip, past research projects were reviewed for the potential impact that the use of debonded strands could have on other end region design guidelines such as splitting resistance reinforcement and confinement reinforcement.

2.3.1 End stresses terminology

Some inconsistencies were observed regarding the use of end zone stress terminologies among research papers and industry practice. The use of the terms splitting, spalling, and bursting to describe end stresses are used differently by AASHTO (2017) LRFD Bridge Design Specifications as well as state DOT design guidelines compared to the use of these terminologies in academia and research papers. One research paper (i.e., French et al. 2011) clarified this terminology.

The stresses in end regions of members can be complex. Per Figure 2-3 below, research by French et al. (2011) indicated that the term *spalling* is used to refer to tensile stresses occurring near the end face of girders where it is at a maximum stress and typically near the centroid of the section. *Splitting* and *bursting* stresses occur along the line of the prestressing force, beginning a few inches into the beam and extending through the transfer length. Thus, bursting and splitting are tensile stresses that can cause cracking along the strands, reducing the bond between the strand and can result in strand slippage.

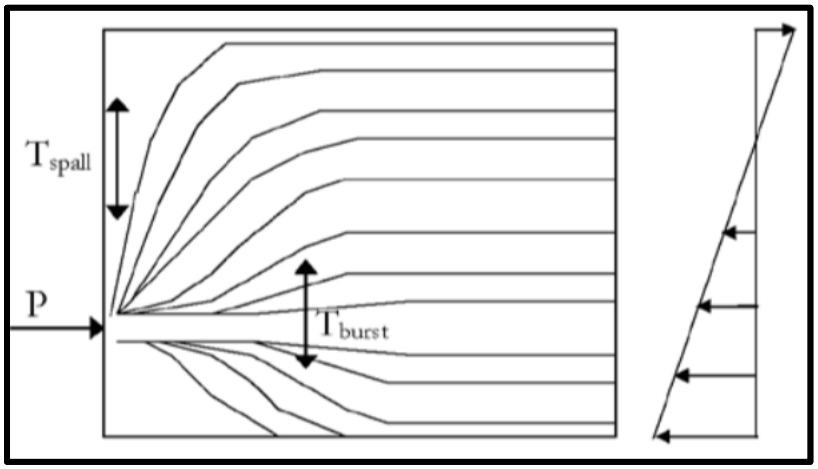

Figure 2-3: Location of Spalling and Bursting Stresses (French et al. 2011)

Figure 2-4 further clarifies the end zone stress terminology. Spalling stresses (labeled 1) occur at the very end and towards the center of members. Whereas, the splitting and bursting stresses (labeled 2) occur further from the end of the member along the line of the prestressing force (labeled 3). Spalling, splitting, and bursting stresses are all tensile stresses transverse to the prestress force.

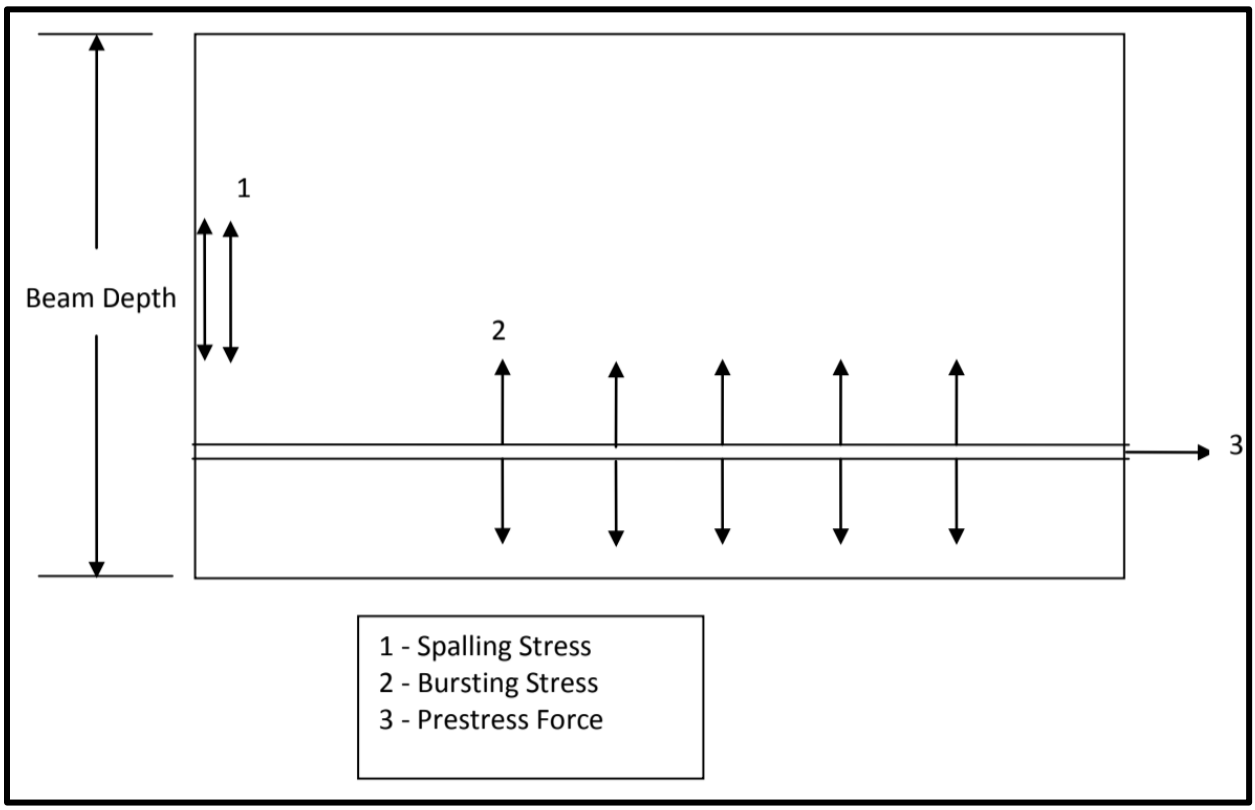

Figure 2-4: Spalling, bursting, and prestress force near the end zone of prestressed members (French et al. 2011)

All of these stresses can cause cracking. Spalling stresses result in cracking at the end face which can propagate further into the member (Gergely 1963).

AASHTO (2017) LRFD Bridge Design Specifications provide guidelines for controlling cracking due to spalling stresses. These guidelines, however, refer to "splitting" resistance reinforcement. AASHTO (2017) LRFD Bridge Design Specifications do not have specific guidelines or provisions labelled as "bursting" to address bursting stresses. However, AASHTO provisions labelled as "confinement reinforcement" fulfill these requirements.

To stay consistent with industry accepted terminology, "splitting resistance" reinforcement will be used in this report to refer to reinforcement that counteracts spalling stresses and "confinement reinforcement" provisions to counteract bursting stresses.

2.3.2 Splitting Resistance Reinforcement

Regarding the design of splitting resistance reinforcement in end region of girders, AASHTO (2017) currently specifies that vertical steel must be provided within $h/4$ from the end of girders to resist 4 percent of the prestressing force at prestress transfer. The resisting force provided by the vertical steel is given by Equation 2-3 (AASHTO (2017) LRFD 8th edition 5.9.4.4.1-1).

$$P_r = f_s A_s \qquad \text{Equation 2-3}$$

where:
P_r is the resisting force provided by the vertical steel,
A_s is the area of vertical steel provided within $h/4$ (h is the total height of the girder), and
f_s is the stress in the vertical steel limited to 20 ksi.

The above AASHTO (2017) LRFD equation for splitting resistance (P_r) must be equal to or greater than 4 percent of the prestress force at transfer, where A_s is the area of vertical steel within $h/4$ and f_s is the stress in the steel not to exceed 20 ksi. MnDOT design guidelines adhere to the AASHTO standards on splitting resistance.

Literature was reviewed to determine the potential impact debonded strands may have on splitting resistance reinforcement. Although debonded strands may get introduced into the beam beyond h/4, neither AASHTO (2017) LRFD Articles nor any other research article was found suggesting that splitting reinforcement should be provided beyond h/4 as a result of terminating debonded strands further into the beam. Current AASHTO (2017) LRFD Articles and research papers, however, specify that no more than 40 percent of the debonded strands or four strands, whichever is greater, can be terminated at any section. Although not explicitly stated, it may be reasonably assumed that this strand pattern requirement will lead to relatively smaller splitting (or spalling) stresses developed at the debonding

termination sections. Transverse reinforcement provided further along the beam will also act to resist these stresses. Research by Okumus and Pinar (2014) was found to support this assumption.

Research by Okumus and Pinar (2014) investigated the impact of debonded strands on cracking through nonlinear finite element analysis and field observations at precasting plants. A limited number of girder geometries were evaluated with various amounts of debonding (i.e., 25%, 30%, and 50%). The authors stated that if the AASHTO provision on debonding termination is followed, "the number of strands for which debonding is terminated is unlikely to be large enough to carry the cracking problem further into the girder."

Other research was reviewed including Hasenkamp et al. (2008) and French et al. (2011), which discuss the design and placement of splitting resistance reinforcement in the end region of girders.
In lieu of following the current AASHTO (2017) code requirements above, Hasenkamp et al. (2008) suggested that 50 percent of required steel should be placed within h/8 and the remainder of the required steel within h/2 from the end of the girder. This research identified through experimental testing of girders that placing the splitting reinforcement in the end h/8 would have the most effective crack control with the least of amount of steel. Similarly, research by French et al. (2011) concluded that splitting resistance reinforcement should be placed as close as possible to the end of the girder.

2.3.3 Confinement Reinforcement

Past research was reviewed regarding the potential impact of using debonded strands on confinement reinforcement in the end region of girders.

AASHTO (2017) LRFD Bridge Design Specifications currently provide a minimum requirement with regards to confinement reinforcement. AASHTO provisions on confinement require, at a minimum, that #3 bars be provided at a maximum spacing of 6 in. for a distance of 1.5*d* from the end of the girder, where *d* is the overall depth of the beam. This requirement is for all prestressed girders regardless of cross-sectional geometry and depth. The purpose of this code requirement is not explicitly stated in the AASHTO LRFD design specifications.

Various researchers (Csagoly 1991, Shahawy et al. 1993, Ross et al. 2013, Patzlaff et al. 2012) have indicated that confinement reinforcement improves the anchorage of strands at girder ends and subsequently, the shear capacity of prestressed girders. Other researchers such as Russell and Burns (1996) recommend that confinement reinforcement be used to prevent splitting at prestress transfer.

Research by Ross et al. (2013) and Hamilton et al. (2013) and reiterated by Shahrooz et al. (2017) in NCHRP report 849 raised potential concerns with the AASHTO minimum requirement on confinement and suggest a more performance-based design methodology for determining the required amount of confinement reinforcement. These authors concluded that the minimum requirements on confinement reinforcement may be unconservative for some girder cross sections, especially for deep girders with wider bottom flanges. Their research primarily focused on preventing lateral-splitting failure which can

occur for girders with a relatively slender bottom flange geometry (i.e., wide bottom flange). Lateral splitting "occurs when the bottom flange splits laterally above the bearing due to applied loads" (Hamilton et al. 2013). This type of failure has been observed in experimental testing by Llanos et al. (2009) shown in Figure 2-5.

Shahrooz et al. (2017) reported that the experimental girder tested by Llanos et al. (2009) where this type of failure was observed had 57 percent debonding, which was a motivating factor for evaluating the design of confinement reinforcement to prevent lateral splitting failure if debonded strands were utilized. However, the approach taken by Shahrooz et al. (2017) and Ross et al. (2013) and the recommendations they developed are not necessarily specific to just the case where debonded strands are used, but as an alternative design method to AASHTO's minimum requirements for confinement regardless of the use of debonding. However, the use of debonded strands and the pattern in which debonding is achieved (i.e., cross-sectional debonding pattern) could affect the formation of cracking in the end region under applied shear loading. For example, in Figure 2-5, all of the debonded strands were placed in the interior rows. This requires the compressive strut due to applied loading to engage with the outermost bonded strands and return back inwards to be reacted by the bearing pad as shown in Figure 2-6.

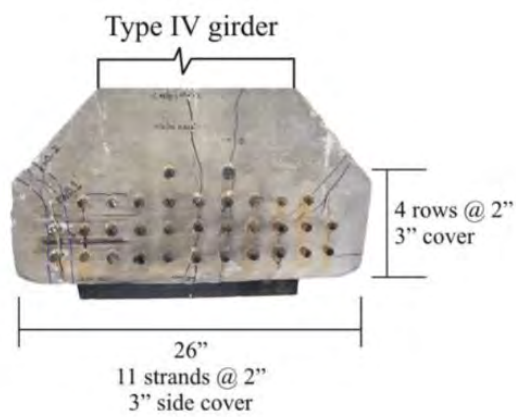

Figure 2-5: Lateral splitting failure (NCHRP Report 849)

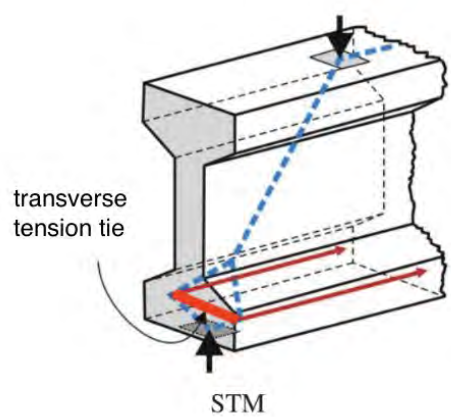

Figure 2-6: STM - transverse tension tie (NCHRP Report 849)

Strut and Tie Model (STM) methodology shows that a transverse tension tie is required for equilibrium, which leads to vertical cracking in the bottom flanges.

NCHRP Report 849 numerically evaluated different girder cross section geometries with various amounts of debonding (i.e., up to 67%) to investigate the effects on end region cracking. NCHRP Report 849 found through a Strut and Tie Model (STM) study that the current AASHTO articles on confinement were adequate to resist the tension tie force for girder shapes with a narrow bulb (e.g., AASHTO I

girders). The current AASHTO (2017) LRFD confinement requirements were not conservative, however, for deep girders with a wider bottom flange (e.g., BT and NU type girders).

For the cases where AASHTO (2017) LRFD codes did not provide satisfactory confinement to resist the tie force (i.e., deep girders with a wider bottom flange), Shahrooz et al. (2017) reported that a larger size and closer-spaced confinement reinforcement could be used (e.g., No. 4 ties at 3 in. spacing which were adequate for all girder geometries except deep NU girders which have a wider bottom flange) or use formulas published in the NCHRP Report 849 to determine the required tie force to be resisted through the STM approach. The tension in the horizontal tie, t, can be calculated as follows and is located a vertical distance y_p from the bottom of girder:

$$t = \left(\frac{n_f}{N_w}\right)\left[\frac{x_p}{h_b - y_p} + \frac{x_p - c_b}{y_p}\right] V_u/\Phi \qquad \textbf{Equation 2-4}$$

where:

V_u is the total reaction (shear) at support,

N_w is the total number of bonded strands at section,

n_f is the number of bonded strands in one side of the outer portion of bulb (The outer portion of bulb is defined as that extending beyond projection of web width. Strands aligned with the edge of web are assumed to fall in the outer portion of bulb),

x_p is the horizontal distance to girder centerline of centroid of n_f strands in outer portion of bulb, and

y_p is the vertical distance to girder soffit of centroid of n_f strands in outer portion of bulb.

Also, c_b is calculated using the following equation:

$$c_b = \frac{b_b}{2}\left(1 - \frac{n_f}{N_w}\right) \qquad \textbf{Equation 2-5}$$

The variables in the equations above are based on the cross-sectional strand patterns and girder geometry, and further clarified in Figure 2-7 below.

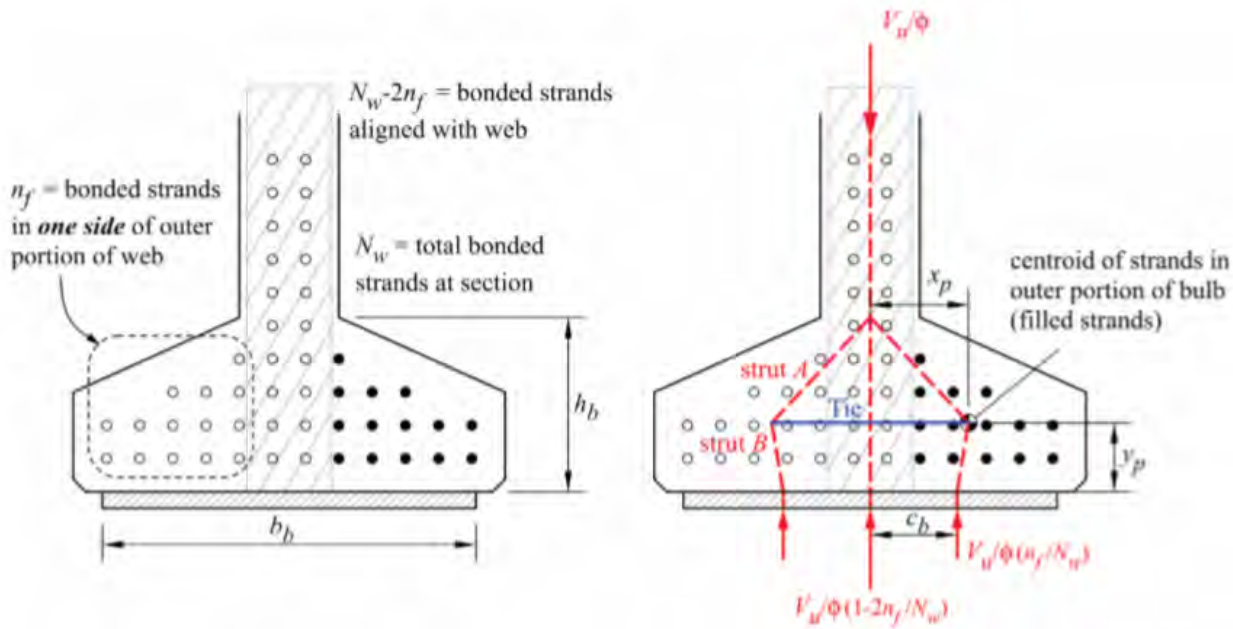

Figure 2-7: Strut and Tie Method (NCHRP Report 849)

Shahrooz et al. (2017) suggests that the reinforcing steel resisting the tie force, *t*, be placed within *h*/4 beyond the length of the bearing plate (where *h* is the overall girder height).

The design methodology and formulas proposed by Shahrooz et al. (2017) for determining the required amount of confinement steel can lead to impractical amounts of steel in the end region of girders. Alternatively, Shahrooz suggests that an embedded steel sole plate may be provided in addition to AASHTO's confinement reinforcement provisions (Article 5.9.4.4.2). An embedded steel sole plate helps maintain structural integrity of the bottom flange above the bearing and provides additional confining capacity (Ross 2012).

The approach taken by Ross et al. (2013) and Shahrooz et al. (2017) was based on looking at the performance of confinement reinforcement at ultimate strength limit states. In addition to resisting tension tie forces at the ultimate strength limit state in girders, confinement reinforcement also provides resistance to bursting forces at prestress release as indicated by Russell and Burns (1996). Research by Russell et al. (1994) and Okumus and Oliva (2014) were further reviewed to determine the impact that debonded strands may have on confinement reinforcement design to resist bursting stresses at prestress release. Debonded strands introduce not only spalling stresses once they are terminated further along the length of the girder, they also introduce splitting and bursting stresses beyond the debonding termination points.

No research was found indicating that confinement reinforcement should be provided beyond 1.5*d* to accommodate the stresses introduced by the debonded strands at the locations of termination. However, research by Russell et al. (1994) concluded that no changes to AASHTO requirement on confinement reinforcement were necessary if debonded strands were terminated further along the length of beam, provided that staggered debonding was employed. Staggered debonding refers to not terminating more than 40 percent of the debonded strands at a section. This was similarly reported in research by Okumus and Oliva (2014) regarding the use of splitting resistance (i.e., "spalling") reinforcement in girders with debonding. The use of staggered debonding ensures that limited stresses will be introduced in a given section along the girder such that cracking further along the length of the beam from spalling, splitting or bursting stresses is not anticipated.

Thus, these research reports suggested that no additional splitting resistance reinforcement or confinement reinforcement are required to resist stresses caused by terminating debonded strands further into the girder length, as long as staggered debonding is utilized.

2.4 OTHER LITERATURE REVIEW FINDINGS

In addition to the key design topics discussed above, other relevant findings are summarized below regarding guidelines associated with the use of debonded strands. These findings include:

- Strands within the web width and outermost strands should remain bonded (Shahrooz et al. 2017).
- Debonded strands should be symmetrically placed about the vertical centerline of the girder cross section. Symmetrical strands should have the same debonded length (Shahrooz et al. 2017).
- Oversized rigid/preformed sheathing tube was recommended as the debonding material over flexible split-sheathing tube due to experimental research showing that the flexible material allowed some bonding between the strand and the concrete if there was tight contact between the sheathing and strand (Burgueno and Sun 2011).
- The use of the LRFD Sectional Design Model provides accurate estimates of shear capacities of girders regardless of whether straight, draped, or debonded strands were used in the girders. This was a finding by Hawkins and Kuchma (2007) who tested 63 in. deep bulb-tee girders cast with high strength concrete (i.e., 10 to 18 ksi concrete compressive strength).

CHAPTER 3: SURVEY OF FABRICATORS AND STATE DOTS

State highway agencies and precast bridge fabricators were surveyed to better understand the practices and experiences regarding the use of debonded and draped strands. Two local precast bridge producers, County Materials and Forterra, were visited to gather information and make observations related to the production of girders with debonded and draped strands as these fabricators have implemented both methods by producing girders for states that allow debonding. Several state highway agencies were also surveyed to learn of their experiences with debonded strands. State highway agencies with a similar climate to Minnesota were queried as they have similar exposure conditions to chlorides and deicing chemicals. A total of eleven agencies were selected to take part in the survey. The list of highway agencies surveyed are as follows: Michigan (MDOT), Illinois (IDOT), Illinois Tollway, New York State (NYSDOT), North Dakota (NDDOT), Kansas (KDOT), Nebraska (NDOR), Wisconsin (WisDOT), South Dakota (SDDOT), Iowa (Iowa DOT), and Missouri (MoDOT). Additionally, state DOT design guidelines and specifications were reviewed and compared to those of AASHTO and MnDOT. The information gathered from fabricators and state highway agencies was expected to be of significant value in developing design recommendations for MnDOT on the use of debonded strands.

3.1 SURVEY OF FABRICATORS

County Materials and Forterra took part in the fabricator survey portion of this project and their respective production facilities were visited in Roberts, WI and Elk River, MN.

The performance of MN girders with draped strands produced by these fabricators were discussed as well as the observed types and amounts cracking. Both producers reported the larger MN and MW girders (i.e., greater than 36M) experienced noticeable web cracking at the girder ends. These cracks generally ran parallel to the draped strands in the top of the web or horizontally near the bottom of the web. Photographs showing examples of this cracking are shown in Figure 3-1. Because inclined cracks run along the draped strands, they may form paths for corrosive liquids to reach the strands and affect the girder durability and end shear capacity (Okumus and Oliva 2014).

(a) MN45 at County Materials in Roberts, WI (b) MN45 at Forterra in Elk River, MN

Figure 3-1: Web cracking observed during the production of MnDOT girders.

According to Okumus and Oliva (2014), the "Y" crack may be the most hazardous crack for bridge safety. Due to the location over the end bearing and size, the "Y" crack can potentially form a path for saltwater to reach the strands. Numerical research by Okumus and Oliva (2014) suggested that debonding reduces the amount and sizes of horizontal cracks and "Y" cracking. The use of debonded strands can also eliminate inclined cracking as a result of reducing the number of draped strands needed.

With regard to draped strands, both fabricators expressed concern with the number of draped strands in current MnDOT girders. Both producers stated that when large numbers of strands are draped (up to 14 strands), two hold down points on each girder end are required to provide adequate anchorage. Forterra also reported that trying to pull more than eight strands through a single hold down point can cause the strands to bind due to friction. Both of these conditions make producing the girders more difficult. Both producers would like to limit the number of draped strands in MnDOT girders.

Other observations made at the production facilities and reported by the fabricators included that the current MnDOT strand release pattern has occasionally led to spalling of the corner concrete when the outermost strands are released last. An image of the spalling observed at the Roberts, WI, facility is shown in Figure 3-2. The space between girders and casting beds requires further investigation as shorter free lengths of strands between girders introduces a greater restraining effect as the girder shortens from partially transferred loads compared to the restraining effect of strands with a longer free length. Also, close proximity of strand cutting to the end of the girder can result in unwinding/expansion of the strands that can lead to spalling of the cover concrete.

Figure 3-2: Image of spalling that occurred during the release of the outer strands on a 36M girder at County Materials in Roberts, WI

The MnDOT release pattern consists of releasing every other straight strand starting from the inside of the girder and working outward. With regard to production of girders with debonded strands for other state highway agencies, all three of the County Materials plants that participated in this survey reported using an outside-in release pattern for girders with debonded strands, similar to the pattern for WisDOT girders. The WisDOT strand release pattern consists of releasing the outermost strands first for each row and working inwards by releasing the second outermost strands in each row.

3.1.1 Production of girders with debonded strands

In producing girders with debonded strands, Forterra uses two layers of split-sheathing tube to debond strands for states such as SDDOT. A flexible split-sheathing tube allows the placement of the prestressing strands within the form prior to placing the sheathing on the strands. The County Materials facility in Roberts, WI uses split-sheathing as well for WisDOT girders while the facility in Janesville, WI uses preformed/rigid sheathing tube. The use of the preformed/rigid sheathing tube requires that the strands must be fed through the sheathing during strand placement.

In the single split-sheathing tubes, tie wires are used on the ends of the tubes to prevent “cream” from seeping into the tubes. The County Materials plant in Salem, IL reported using a single corrugated split tubing that is 0.75 inches in diameter to debond strands. Both Forterra and County Materials expressed concern with the use of preformed/rigid sheathing to debond the strands because it is more difficult to work with and takes more time to apply than split-sheathing.

Other relevant findings reported by fabricators related to the production of girders for both MnDOT and other state highway agencies are highlighted below:

- For MnDOT girders, fabricators apply Sika 62 [sic] epoxy to the exposed ends of fully bonded strands and paint the ends and sides of girders with Masterseal 630 and Duralprep for the greater of the following lengths (a) end four feet or (b) from the end of the beam to the end of the furthest crack.
- The use of Loxon caulk was reported to protect the ends of the strands in the girder and the use of TK sealer to coat the bottom and sides of the girder for its full length for certain state DOTs (i.e., WisDOT, IDOT, Illinois Tollway).
- County Materials reported that a tar-like substance is used to protect the ends of the strands and a zinc paint is applied to the sides and ends of girders produced for MoDOT and Canadian Northern Railroad.
- Representatives from the County Materials plant in Janesville, WI, commented they do not believe that debonding strands is as effective at reducing end cracking compared to only using draped strands.
- The County Materials plants in Janesville, WI and Salem, IL credited the use of a bursting plate device, shown in Figure 3-3, placed in the end regions of the girder to considerably reduce end cracking.

Figure 3-3: Bursting plate device used in IDOT, Illinois Tollway, and MoDOT girders. Image courtesy of County Materials

The bursting plate device is placed in the end region of girders prior to concrete pour and consists of a steel plate at the bottom of the girder with threaded rods running vertically upward through the girder that are attached with nuts to another plate at the top of the girder.

In addition to Forterra and County materials, a third fabricator producing girders with debonded strands for other states was contacted as a follow up to the survey of other state DOTs. The Illinois Department of Transportation (IDOT) provided contacts for Illini Precast as one fabricator that has produced girders for IDOT. Comments made by Illini Precast are summarized below relevant to the production of girders with debonded and draped strands.

- Similar cracking was observed by Illini Precast for girders with bonded and debonded strands. Mostly horizontal cracks, some inclined cracks, and rarely Y cracking was observed.
- Illini Precast indicated they would like to see a limit on the number of draped at 10 for 0.6-inch diameter strands due to the capacity of hold down devices.
- Illini Precast has found the use of the IDOT bursting steel device to control the crack widths, but did not prevent cracking
- Seamless preformed/rigid sheathing tube is used as required by IDOT and strands must be fed through sheathing prior to pulling.
- The ends of prestressed girders are sprayed with a silane sealer to protect prestressed strands from corrosion. Cracks are occasionally sealed with an epoxy sealer.

With over 30 years of experience producing girders, the representative at Illini Precast expressed doubts that corrosion would ever significantly affect the structural integrity of the girder.

3.2 SURVEY AND REVIEW OF STATE DOT DESIGN GUIDELINES AND SPECIFICATIONS

A total of eleven agencies with a similar climate to Minnesota were selected to take part in the survey. Contacts for these Departments of Transportation (DOTs) were provided by MnDOT. The individuals queried at the state DOTs not only included engineers and designers, but also state inspectors to gather a wider range of views and experiences with debonded strands.

Design guidelines and specifications of these states were reviewed and compared to MnDOT and AASHTO design specifications. For most states, written documents were found addressing each state's practice associated with debonding. Among the written documents reviewed included bridge design manuals (e.g., MDOT Bridge Design Manual), special provision sheets (e.g., IDOT Guide Bridge Special Provisions), technical memos (e.g., IDOT All Bridge Designers Memo 15.2), as well as standard detail sheets (e.g., MnDOT Bridge Details Manual Part II). These documents are referred to as "design guidelines." Standard construction specifications and fabrication manuals (e.g., IDOT Manual for Fabrication) were also reviewed and are referred to as "specifications".

The findings of both of the survey of state DOTs and review of their design guidelines and specifications were consolidated and are further discussed below. For any cases of contradiction between the survey responses and the review of written documents, the survey responses were considered to be a more accurate representation of each state's current practice.

Of the eleven agencies surveyed, ten states allowed the use of debonding as shown in Figure 3-4 for a total of 91 percent (i.e., MDOT, IDOT, Illinois Tollway, NYSDOT, NDDOT, KDOT, MoDOT, NDOR, WisDOT, SDDOT). Five (i.e., MDOT, IDOT, Illinois Tollway, NYSDOT, and NDDOT) of the ten states that allowed debonding preferred it as their primary method of reducing end stresses. Three (i.e., NDOR, WisDOT and SDDOT) of the ten states cited draping as their preferred method. Two states (i.e., KDOT, MoDOT) use both debonded strands and draped strands on a case by case basis and did not indicate a clear preference. Only one state (i.e., Iowa DOT) currently does not allow the use of debonded strands due to "ineffective debonding". As discussed later, the type of sheathing material used could potentially lead to ineffective debonding, which may be the reason debonding is not allowed in Iowa.

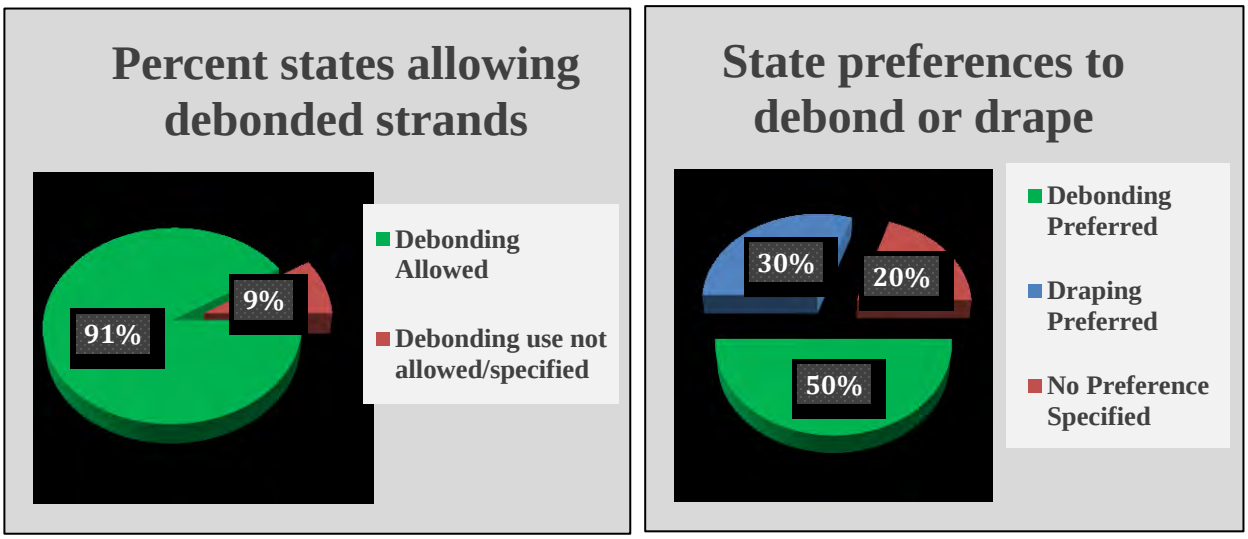

(a) Percent of state agencies allowing debonding (b) debonding/draping preferences

Figure 3-4: State highway agencies allowing debonding and preference of debonding versus draping

3.2.1 Industry practice on debonding limits

A number of states limit debonding to the current AASHTO (2017) recommended limit of 25 percent (i.e., IDOT, Illinois Tollway, NYSDOT, NDDOT, KDOT, SDDOT). A few other state highway agencies, however, exceed this current AASHTO (2017) limit including agencies such as MDOT and NDOR as shown in Figure 3-5.

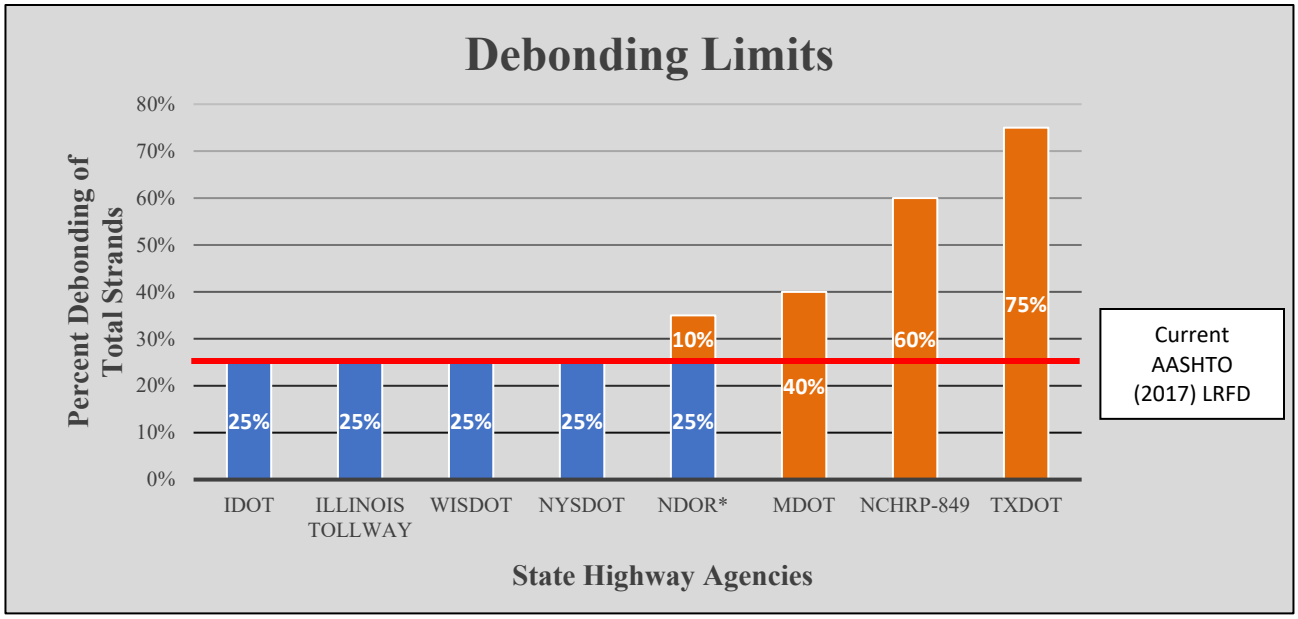

Figure 3-5: Percent of debonded strands specified by state highway agencies

NDOR allows up to 35 percent debonding in certain situations, while MDOT allows up to 40 percent of debonded strands in all of their girder sections. In the past, NYSDOT had no maximum limit on the percent of strands that may be debonded and have had cases where 50 percent of strands were debonded. Current design guidelines, however, limit the debonded strands to 25 percent. MnDOT specifications currently do not comment on debonding limits as it relies solely on the use of draped strands in reducing end stresses. Other states outside of the scope of the project have had success with higher debonding percentages and allow up to 75 percent debonding (i.e., TxDOT).

NCHRP Report 849 suggests that up to 60 percent of strands may be debonded as reported in literature review. As a result, states such as Nebraska have further commented they will increase their debonding limits based on the findings of NCHRP Report 849. The amount of anticipated increase was unspecified, however. IDOT, which recently started debonding, stated that they do not plan to make any changes to debonding limits based on NCHRP Report 849 unless AASHTO adopts those suggestions. Currently, proposed AASHTO updates to debonding guidelines indicate that AASHTO may allow up to 45 percent of strands be debonded based on recent research reports such as NCHRP Report 849.

3.2.2 Increasing use and popularity of debonded strands

There is a noticeable increasing trend in the use of debonded strands as the preferred and primary method of reducing end stresses. IDOT and Illinois Tollway are two agencies that have recently started using debonded strands within the past three years. Prior to 2015, the state of Illinois relied on draping as their primary method of reducing end stresses. However, due to safety and constructability challenges associated with draping, IDOT and Illinois Tollway prefer debonding on their new beam designs. Similarly, NYSDOT uses debonding as the primary way of reducing end stresses because “they

are easier to manufacture." NYSDOT did not allow draping for a period of 20 years from the 1980's due to casualties from a hold down failure at one of their fabrication plants. Safety and constructability are key drivers to the increasing popularity in debonding. Currently, NYSDOT debonds more often than they drape. Safety and constructability are of significant importance in the construction/fabrication industry and are justification for the preference towards debonding. They also have the potential for cost savings as a result of the ease of fabrication, although strand sheathing is an added step in the fabrication process.

It was further observed that nearly all states surveyed utilized the lesser preferred method in specific situations or in combination with their primary method to reduce end stresses. For states that prefer draping, when draping alone is not sufficient to reduce end stress, debonding is used in combination with draping and vice versa. Thus, the use of debonded and draped strands is not an either/or option, but two complementary methods of reducing end stresses that may be used concurrently.

3.2.3 Splitting resistance methods

Similar to fabricator observations, several state highway agencies (i.e., MDOT, IDOT, Illinois Tollway, KDOT, and SDDOT) have found bursting steel or splitting zone reinforcement placed in the end region of girders as the most effective method to control end cracking. Three different methods of splitting resistance reinforcement were identified in the survey responses and review of design guidelines and specifications.

3.2.3.1 Method 1

Some states simply satisfy the AASHTO code provisions on splitting resistance, as discussed in the literature review section of the report, by providing anchorage zone reinforcement to resist four percent of the total prestressing force. This reinforcement is placed within h/4 of the end of the girder (i.e., NDOR, MoDOT). MnDOT currently adheres to this method but allows the required splitting reinforcement to be placed beyond h/4, in an effort to provide realistic spacing to allow concrete to get in heavily reinforced sections.

3.2.3.2 Method 2

Other states (i.e., IDOT, Illinois Tollway) use a modified distribution of the splitting resistance reinforcement and have credited this distribution with recommendations made by various research reports. As suggested by Hasenkamp et al. 2008, 50 percent of the required reinforcement is placed at a distance h/8 from the end of the beam and the rest of the required steel extends to h/2.

3.2.3.3 Method 3

IDOT has further developed a bursting steel detail which is also based on placing 50 percent of the splitting resistance reinforcement within h/8 from the beam end. As reported by fabricators, the bursting steel detail used by IDOT consists of a steel plate at the bottom of the girder with 1 in. threaded rods running vertically upward through the girder that are attached with nuts to another plate at the top

of the girder as shown in Figure 3-3. Fabricators (e.g., County Materials) have also found this method to considerably reduce end region cracking in girders.

3.2.4 Strand Release Pattern

Most state highway agencies rely on the experience and best practices of fabricators with regard to the strand release pattern. Some state highway agencies generally require symmetry in the detensioning process and in a manner that produces the least eccentric load (e.g., IDOT, MDOT, NYSDOT, MoDOT). In addition to symmetry, IDOT requires that strands be released using a slow release method as opposed to an abrupt cut. NYSDOT indicated there is no preference towards slow release or abrupt flame cutting, and that either option may be utilized. Highway agencies that specify a strand pattern release when strands are released abruptly include NDDOT and WisDOT.

In conjunction with the use of debonded strands, most states did not indicate any requirements or changes to their strand release pattern requirements. Design guidelines and specifications of states outside the scope of the project were reviewed such as South Carolina Department of Transportation (SCDOT). Both SCDOT and SDDOT design guidelines and specifications were found to require that fully bonded strands be released first and debonded strands released after all fully bonded strands have been released. The debonded strands are to be released in sequence from shortest debonding length to maximum debonding length. Both of these highway agencies do not have a specific strand release pattern and let the fabricator use their best practice. These requirements are an exception to the fabricator's method of strand release pattern in the case debonded strands are utilized.

3.2.5 Methods of strand corrosion protection and sheathing

Several different methods were used by states to protect debonded and fully bonded strands from corrosion. In some cases, state DOTs encased the ends of their prestressed girders in concrete (built integrally into the diaphragm) as a primary layer of defense to protect strands from exposure to corrosive material such as the salt that is often applied to roads in the winter.

As additional precautionary methods to protect prestressing girders with or without debonded strands, the following methods were generally reported by state DOTs:

- Sealing beam ends with an elastomeric sealer when there is an open joint above beam ends and treatment of the beam ends with asphaltic material at a minimum for the case of debonded strands (MDOT)
- Use of silicone sealants to seal strand ends (IDOT, Illinois Tollway, NYSDOT, NDDOT)
- Application of a zinc-spray coating regardless of beam encasement in concrete (IDOT)
- Addition of corrosion inhibitor and sealing beam ends with two coats of penetrating silane sealer. The required corrosion inhibitor consists of a calcium nitrite solution containing 30 (±2%) calcium nitrite solids by weight with a specific gravity of 1.27 (±0.02). An approved corrosion

inhibiting admixture is SIKA CNI per the NYSDOT Prestressed Concrete Construction Manual (NYSDOT)

- Painting on girder ends and use of an approved epoxy coating (NDOR, KDOT, WisDOT, Iowa DOT, MnDOT).

The most popular method of sheathing used by state highway agencies was the use of single split-sheathing. Consistent with fabricator responses, state highway agencies find it easier to implement this method in the production of girders than the use of preformed/rigid sheathing tube. State highway agencies using the split-sheathing method require that the sheathing be taped or tied along its length to preclude concrete entry through the split. Taping and tying the flexible split-sheathing can be disadvantageous as reported by Burgueno and Sun (2011) and allows for some bonding as a result of the tight contact between the sheathing and strand. As such, agencies such as IDOT and Illinois Tollway require a seamless sheathing tube that closely resembles a preformed/rigid sheathing tube. MDOT has also reported observed beam cracking with the use of single split-sheathing tube due to tight contact between the sheathing and strand, but performance was improved with use of oversized sheathing material.

CHAPTER 4: PERFORMANCE OF GIRDERS WITH DEBONDED STRANDS

Based on the survey response of fabricators and state DOTs, as well as the literature review, the performance of girders with debonded strands was evaluated. Although no research articles were found explicitly discussing the durability of girders with debonded strands, the experience of fabricators and state highway agencies was relied upon to evaluate the performance of girders with debonded strands. As such, fabricators and states reported no issues or detriments to the durability of prestressed girders as a result of implementing debonded strands.

With over 40 years of using debonded strands, MDOT indicated that no durability or corrosion issues have been observed or associated with the use of debonded strands. Although bridge girders for MDOT do not appear to be tracked based on the use of debonding, MDOT has sponsored research evaluating the performance of their bridge girders which have been in service for over 40 years. This assessment was carried out by Birgul et al. (2003). Similarly, with over 30 years of experience producing prestressed bridge girders, representatives at Illini Precast expressed that the potential corrosion of debonded strands from deicing agents may not be an issue to ever cause a significant detriment to ultimate capacity of girders.

In the assessment by Birgul et al. (2003), no durability concerns were reported associated with the use of debonded strands. Detailed field inspections were conducted for twenty (20) highway bridges in Michigan and various components of the bridge were graded including the superstructure and prestressed I-girder elements. “Major concerns observed with older structures included the corrosion of prestressing strands and high chloride concentrations in concrete. It was reported that the deterioration level was influenced by the location of the bridge, traffic volumes, load limits, and de-icing salt usage” (Birgul et al. 2003). However, no deterioration or corrosion concerns were attributed directly to the use of debonded strands.

In follow-up surveys with MDOT Bridge Inspectors, the research team specifically queried regarding any in-field corrosion issues associated with debonded strands. MDOT inspectors reported that girders with debonded strands have performed well and in service for a number of years. Representatives from MDOT throughout the survey indicated there were no performance issues or signs of deterioration associated with debonded strands that were different than what is typically observed in all girders regardless of debonding. The other state highway agencies also did not report any evidence of deterioration or corrosion of in-field girders with the use of debonded strands that were any different from the performance of girders without debonding.

The behavior of beams (i.e., at service and ultimate limit states) made with debonded strands is considered both predictable and reliable (Russell and Burns 1994). This has been further verified by various research such as Shahrooz et al., and Hawkins and Kuchma, where experimental testing of girders with debonding resulted in satisfactory ultimate strengths of girders prior to aging. The predicted

capacities of full-scale test girders were achieved, and most beams carried loads greater than the predicted capacity.

No evidence was found through the survey of other state DOTs indicating that the use of debonded strands in girders resulted in a detriment to the long-term capacity. Thus, the long-term performance of girders with debonded strands may be reasonably considered to be acceptable. Reasonable precautionary methods of corrosion protection should be provided similar to the state highway agencies surveyed.

4.1 IMPROVED AESTHETICS

Regarding the aesthetics of girders with debonded strands, there is potential for improved performance and reduced amounts of cracking.

A few agencies observed reduced amounts or size of cracks as a result of using debonded strands (Illinois Tollway, NYSDOT). Other state highway agencies reported that no additional cracking or types of cracking were observed when debonding was used compared to the case of girders without debonded strands (MDOT, IDOT, Illinois Tollway, NYSDOT, NDDOT, KDOT, NDOR). The other three (3) states allowing debonded strands cited debonding was used infrequently and did not comment on observations in end cracking due to debonded strands (MoDOT, WisDOT, SDDOT).

Literature review findings have also indicated that the use of debonded strands can lead to reduced amounts of end cracking as well as reduced size end cracks compared to cases where draped strands alone were used (e.g., Okumus and Oliva 2014). Large numbers of draped strands can lead to inclined cracking, whereas the use of debonded strands can reduce these cracks and reduce the number of draped strands required if both methods are used together.

CHAPTER 5: CONCLUSIONS AND RECOMMENDATIONS

Based on the literature reviewed, survey of other state highway agencies, and review of design guidelines and specifications, debonding is a viable option for reducing end stresses in prestressed bridge girders in Minnesota.

Despite some of the drawbacks of using debonding such as potential reduction in shear capacity, the use of debonded strands in the design of prestressed concrete bridge girders is considered safe, predictable, and reliable.

The use of debonding has been implemented by ten out of eleven state highway agencies surveyed in this report with a similar climate to Minnesota. To implement debonded strands in Minnesota, design recommendations have been developed regarding the total percentage of strands that may be debonded. Recommendations are made regarding potential material specifications and procedures for protecting debonded strands from corrosion. In addition, other design guidelines are presented concerning splitting resistance reinforcement, confinement reinforcement, and strand release patterns if debonded strands are utilized.

5.1 DEBONDING LIMITS

As mentioned previously, research by Shahrooz et al. (2017) suggested that debonded strands should be permitted up to 60 percent of total strands based on experimental results, given that sufficient steel is provided to satisfy longitudinal reinforcement requirements.

Although experimental research has indicated that higher percentages of debonded strands (i.e., 60%) are not detrimental to the immediate strength and performance of prestressed girders, higher debonding percentages create additional openings between the strands and sheathing. If not sealed properly or if sheathing methods are ineffective, this can create additional opportunities for chloride ingress inside the sheathing. This is one of MnDOT's stated concerns with debonded strands.

In search of an optimal debonding percentage that can achieve substantial end stress reduction while reducing the risk of corrosion and amount of shear reduction, research by Okumus and Oliva (2014) was reviewed. These authors suggested that the least amount of debonding that can satisfy end stresses should be used. Based on a limited numerical study of 12 girders with various debonding ratios, Okumus and Oliva observed that the cross-sectional pattern of debonding (e.g., use of staggered debonding along the beam length) was more important than the number of strands debonded in controlling end cracks.

Based on MnDOT's previous design guidelines not allowing debonded strands and stated concerns regarding corrosion, it is recommended that incremental debonding limits be used, starting with 40 percent debonding of the total number of strands. This initial amount was selected as a balance

between achieving substantial reduction in end stresses, while reducing the number of voids created by debonding that may be susceptible to chloride ingress. This also allows MnDOT to start at a comfortable debonding percentage before going to higher debonding percentages. On successful implementation and monitoring of the field performance of the methods of corrosion protection used on girders with 40 percent debonding, higher debonding percentages may be permitted (i.e., 45%, 50%, 55%) up to 60 percent, which was found to be an acceptable limit through experimental research.

The proposed initial debonding limit further leads to practicality in design by reducing the likelihood of needing additional mild longitudinal steel to satisfy longitudinal reinforcement requirements, where highly prestressed girders in Minnesota may not have the space to accommodate this additional steel.

Ultimately, up to 60 percent debonding is recommended and was determined based on the findings of the literature review as well as the results from the survey of state highway agencies with a similar climate to Minnesota where debonding has been used for a range of periods, from three years (e.g., IDOT) to over 40 years (e.g., MDOT). The effectiveness of corrosion protection methods currently available in the industry also plays a role in the recommended debonding limit.

5.2 CORROSION PROTECTION METHODS

The various methods of corrosion protection previously identified include treating the ends of the sheathed strand with silicone sealant (e.g., caulk material) or an asphaltic material to mitigate the entrance of deicing agents through the voids between the sheathing and strand. The girder ends are also treated with epoxy coating on the exposed strands, or the end few feet of the girders (e.g., end and side surfaces) are painted to prevent water seepage through the concrete.

It is recommended that silicone sealants be used to protect debonded strands. Sealing strand ends with a silicone sealant was found to be the most common method of corrosion protection used by highway agencies to seal the voids between strands and sheathing material. Silicone sealants, or other forms of elastomeric sealers, are commonly used in the construction industry to seal openings and joints. Silicone sealants remain durable and flexible over extreme temperatures. Five of the ten state highway agencies surveyed in this research that indicated the use of debonded strands specify this type of material for the protection of debonded strands (i.e., MDOT, IDOT, Illinois Tollway, NYSDOT, NDDOT). Two different methods of applying silicone sealants at beam ends are used. The method chosen to be included in the MnDOT draft design guidelines is to apply the silicone sealant on the exposed strand ends to cover both the strand and sheathing. This method is similar to IDOT's current practice and is shown in Figure 5-1.

Figure 5-1: Exposed strand ends treated with silicone sealant (Photo courtesy of IDOT)

Alternatively, the silicone sealant may be applied at the end of the girder on the voids between strands and sheathing. This method is used by SDDOT and SCDOT and is different from IDOT's method where the sealant is applied over the end of the strand and sheathing. The following note, shown in Figure 5-2, is an example of SCDOT's corrosion protection method, which is documented on its standard beam detail sheets.

Within 48 hours of detensioning, seal the openings between the strands and the sheathing . Use an approved sealant that is made of either epoxy or silicone. If silicone sealant is provided, use a low modulus silicone sealant that is white in color.

Figure 5-2: SCDOT's corrosion protection method on debonded strands

One of the drawbacks of this method is that fabricators have observed a pop out of the caulk used to seal the strand/sheathing opening.

It is recommended to use a silicone sealant with a low modulus of elasticity to gain advantages associated with expansion and contraction abilities of the material to help counteract the risks of pop out. Nonetheless, care should be taken when applying silicone sealants. They should be inspected to ensure strands remain sealed prior to shipment of girders.

Other available methods of corrosion protection include treating the ends of debonded strands with an asphaltic material or tar-like substance. This method is used by MDOT at a minimum to protect debonded strands from corrosion in addition to using an elastomeric sealer to seal beam ends. The Illinois Tollway also uses grouting as an option to protect strands from corrosion in addition to silicone sealants.

MnDOT currently uses approved sealants on exposed strand ends and paint on the end surfaces of beams to seal cracks and protect strands from corrosion. The recommended use of silicone sealant to protect debonded strands could eliminate the use of approved sealants (e.g., epoxy coating) applied on the exposed ends of strands if the silicone sealant is applied on both the strand and sheathing in accordance with Figure 5-1. However, if the silicone sealant is applied only on the voids between the strand and sheathing, the use of silicone sealant would be, in addition to MnDOT's current method of corrosion protection, to apply approved sealants (e.g., epoxy coating) on the exposed ends of strands. Approved painting methods could also be applied on the end surfaces of the beam (i.e., ends and side surfaces) as a further precautionary measure to protect strands from corrosion.

As a primary layer of defense against corrosion, most of the states surveyed typically cast the ends of prestressed girders in end diaphragms. However, debonding is still used in the case where girders are not cast in end diaphragms by sealing the debonded strands. The recommended corrosion protection method should be used by sealing the debonded strands regardless of placing prestressed girders in integral abutments.

5.3 STRAND SHEATHING METHOD

Three different methods of blanketing or sheathing the strands to obtain debonding were evaluated based on the experiences of fabricators and other state highway agencies as well as research findings.

Split-sheathing tube is preferred by fabricators due to the ease of fabrication in using this material over rigid sheathing tube. Split-sheathing tubes can achieve debonding with either a single split-sheathing tube or double split-sheathing tube method. Figure 5.3 and Figure 5.4 depict a single split-sheathing and double split-sheathing tube method, respectively. A concern with the single split-sheathing tube is that it allows concrete to seep through the sheathing and form a bond with the strand. Some states specify that single sheathing be taped or tied along its length to preclude the entry of concrete (e.g., WisDOT).

Figure 5-3: Single split-sheathing tube (ALP Supply)

Figure 5-4: Double split-sheathing tube method

This is not preferred as a tight contact between the debonded strand, and single-split sheathing tube can lead to cracking along entire debonded length due to radial expansion of strand at prestress release (Burgueno & Sun, 2011). Burgueno and Sun (2011) suggest that oversized rigid sheathing tubes should be used instead. However, the fabricators surveyed expressed concern with this solid/rigid sheathing tube because it is more difficult to work with and requires that the strands be fed through the tube.

Thus, an oversized double split-sheathing tube method is recommended, which is the use of two single split-sheathing tubes. By placing the two slits/openings of the sheathing tubes on opposite sides, concrete entry will be prevented without having to tape or tie along the sheathing length. Thus, a double split-sheathing tube method will provide sufficient room for the strand to dilate, all while maintaining ease of construction in the fabrication process compared with the other two alternatives. This method of strand sheathing is also currently used by MDOT, SDDOT, SCDOT, and NDOR. The end of the double split-sheathing tubes inside the beam form must also be tied with suitable material (e.g., rebar tie wires) or taped with waterproof material to prevent concrete entry. Alternatively, Figure 5-5 shows application of a silicone sealant within the beam forms between the sheathing and strand to prevent concrete entry. This alternative method is currently utilized by IDOT.

Figure 5-5: Silicone sealant applied within the beam form (Photo courtesy of IDOT)

5.4 STRAND RELEASE PATTERN

Most state highway agencies rely on the experience and best practices of bridge fabricators regarding strand release patterns and de-tensioning of prestressed girders.

Of the ten highway agencies that were surveyed that allow debonded strands, no indication or information was gathered regarding changes to their specification as a result of debonded strands, except for one state which adds a note on its beam sheets regarding the release of debonded strands (SDDOT).

The research team expanded the scope of the study beyond the eleven surveyed agencies in an effort to find information on release methodology specified with the use of debonded strands. Some standard detail sheets of additional state highway agencies that use debonded strands were perused. The South Carolina Department of Transportation (SCDOT), similar to SDDOT, adds a note on its standard beam sheets as an exception to the fabricator's method of strand release pattern when debonded strands are used. SCDOT and SDDOT notes state that fully bonded strands are to be released first, then debonded strands are to be released after all fully bonded strands have been released. The debonded strands are to be released in sequence from shortest debonding length to maximum debonding length. The release symmetry that MnDOT requires will be maintained because strands with equal debonding lengths will be placed symmetrically about the beam vertical centerline. It is recommended that symmetry be maintained in the strand release pattern.

It is recommended that these exceptions (i.e., SCDOT and SDDOT notes on releasing fully bonded strands first) be incorporated into standard beam sheets or in the special provisions. There are no apparent risks associated with these notes, but they do offer a few benefits. One benefit is that because debonding cannot be placed in the outermost strands, the last few strands to be de-tensioned will likely be away from the surface. This will reduce the risks of spalling of corner concrete that fabricators have reported as a result of releasing outermost strands last. The other benefit of incorporating this exception is that the final strands released (i.e., longest debonded strands) will introduce less restraining stress in the beam before they are cut because they have the longest debonded length. As the girder shortens, the reduction in length of the girders causes an increase in the free length of the uncut strands. Because the debonded strands have a longer free length than the bonded strands, the restraining stresses in the free length portion of those strands will be smaller than they would be in the bonded strands.

For these reasons, it is recommended that fabricators use the MnDOT strand release patterns method or their preferred method with the one exception listed previously. Fully bonded strands should be released first, and debonded strands are to be released after all fully bonded strands have been released, in sequence from the strand with the shortest debonding length to the strand with the maximum debonding length.

5.5 SPLITTING RESISTANCE REINFORCEMENT

The use of debonded strands has been recommended to MnDOT as a feasible option to reduce end stresses and help control end cracking. This will not change MnDOT's current guidelines for splitting resistance reinforcement, but it will reduce the amount of splitting resistance reinforcement required because of the reduced amount of prestress at the beam end. Splitting resistance reinforcement shall be provided to resist 4 percent of the prestressing force, calculated using the area of bonded steel located within $h/4$ from the end of the beam (where h is the height of the beam).

Although debonded strands may get introduced into the beam beyond $h/4$, the use of staggered debonding lengths (i.e., limit of 40% of debonded strands terminated in any section) ensures that splitting stresses introduced further into the beam should not cause cracking at debonding termination points.

Although no changes are recommended for splitting reinforcement as a result of debonding, there are other splitting reinforcement methods available that could provide advantages to MnDOT over its current method. If most of the splitting reinforcement is placed in the end $h/8$, it would have the most effective crack control with the least amount of steel (Hasenkamp et al. 2008).

At MnDOT's discretion, this method may be considered as an alternative to the current method where the required splitting resistance reinforcement is placed within $h/4$. The benefit is that the amount of steel may be reduced in MnDOT's heavily reinforced sections. This method allows for greater spacing for

the reinforcement placed between *h*/8 and *h*/2, and the reinforcement placed between *h*/8 and *h*/2 is not in addition to shear reinforcement requirements. However, the same amount of splitting reinforcement is required up to a distance *h*/8 from the end of the girder as when all of the required splitting reinforcement is placed within *h*/4. If this method is to be used, it must be further checked on a beam-by-beam case, whether 50 percent of the required steel can be placed within *h*/8 at MnDOT's required minimum spacing of 2.5 in. or 3 in., depending on the selected standard beam section. It is worth noting that the use of debonded strands does reduce the required prestressing force to be resisted by the splitting reinforcement as only the area of bonded steel within *h*/4 contributes to the prestress force, which further facilitates the placement of concrete in end regions by reducing the required amount of vertical reinforcement.

5.6 CONFINEMENT REINFORCEMENT

The use of debonded strands will not impact MnDOT's current standards regarding confinement reinforcement placed near the girder ends for a distance of 1.5*d*, where *d* is the overall depth of the girder. Review of other state specifications has also confirmed that the use of debonded strands does not affect their confinement reinforcement requirements. All state DOTs surveyed that allow debonding, except for one, continue to provide confinement reinforcement for a distance of 1.5*d* whether or not debonding is used. These states, however, also use an embedded steel sole plate at the end of girders. MoDOT typically provides confinement reinforcement for the full length of girders in lieu of 1.5*d* regardless of debonding. Research by Shahrooz et al. (2017) and Ross et al. (2013) suggests that the AASHTO (2017) confinement provisions (i.e., Article 5.9.4.4.2) may be used in addition to an embedded steel sole plate.

The two requirements specified in the research reports regarding the use of the sole plate were (1) the sole plate width must be at least half of the bottom flange width, and (2) the sole plate is embedded. An embedded sole plate helps maintain structural integrity of the bottom flange above the bearing and provides additional confining capacity.

MnDOT uses an embedded steel sole plate in standard beam sections but allows it to be omitted for beams that will be placed in integral abutments. It is recommended the AASHTO (2017) LRFD Article 5.9.4.4.2 for confinement be used in either case. No changes are required with regard to confinement detailing as a result of implementing debonded strands.

In addition, other authors have indicated that by limiting the termination of debonded strands in a section to 40 percent of debonded strands, the bursting stresses produced farther along into the girder will not be high enough to cause stresses large enough to produce cracking, thus the recommendation to use staggered debonding lengths.

5.7 CONCLUDING REMARKS AND SIGNIFICANCE OF FINDINGS

The use of debonding is recommended as a viable option to reduce girder end stresses. On successful implementation of the initial recommendation of 40 percent debonding, the amount of debonding should be incrementally increased up to 60 percent. Inspection and monitoring programs should be implemented to track the field performance of girders with debonded strands.

This research project explored the viability of implementing debonded strands as an alternative to draped strands, or in combination with the draping option. The use of draped strands, which has been MnDOT's primary method of limiting end stresses, can be decreased by using debonded strands to improve fabrication safety, constructability, and aesthetics by reducing inclined cracking. Debonding and draping can be used concurrently and as two complementary methods to reduce end stresses, without relying too heavily on one method.

The use of draping should not be completely eliminated because it has benefits such as its contribution to shear capacity, whereas shear capacity is reduced when debonded strands are employed. The use of draped strands, particularly strands that are draped over the depth of the web of the girder in its end region, can significantly improve the shear capacity of the end region as the vertical component of the prestressing force in the draped strands contributes to resisting shear.

The significant findings of this study are that debonded strands can lead to improved aesthetics by reducing beam crack types such as inclined cracking. A safer production of girders is also made possible with the use of debonded strands. Furthermore, potential cost savings are possible as debonding does not require specialized equipment such as hold-down devices.

5.8 FUTURE RESEARCH WORK

Potential future research such as investigation of the effect of different strand release patterns in conjunction with debonding could further improve girder performance. Also, MnDOT may want to consider funding an investigation related to studying the effect of spalling relative to the spacing between prestressed girders on the casting bed.

Numerical studies through a Finite Element Model could also be performed to determine the implications of debonding beyond 60 percent of total strands as well as any drawbacks to using a higher debonding percentage aside from practicality reasons. Other states (i.e., TxDOT) have had success with 75 percent debonding. However, states such as Texas may not be subject to similar exposure conditions to corrosion from deicing agents that could lead to corrosion of the prestressing strands.

REFERENCES

Abdalla, O. A., Ramirez, J. A., & Lee, R. H. (1993). Strand Debonding in Pretensioned Beams - Precast Prestressed Concrete Bridge Girders with Debonded Strands - Continuity Issues. Retrieved from https://docs.lib.purdue.edu/cgi/viewcontent.cgi?article=2554&context=jtrp

Association of State Highway and Transportation Officials. (AASHTO). (2017). *AASHTO LRFD Bridge Design Specifications*, 8th Ed. Washington, DC: American Association of State Highway and Transportation Officials (AASHTO).

Barnes, R. W., Burns, N. H., & Kreger, M. E. (1999). Development Length of 0.6-inch Prestressing Strand in Standard I-shaped Pretensioned Concrete Beams. No. FHWA/TX-02/1388-1. Transportation Research Board of the National Academies, Washington, DC.

Birgul, R., Rektorlugu, M. U., Koyuncu, Y., Ahlborn, T. M., & Aktan, H. M. (2003). *A 40-year Performance Assessment of Prestressed Concrete (PC) I-Girder Bridges in Michigan*. Paper presented at the TRB 2003 Annual Meeting, Washington, DC.

Briere, V., Harries, K. A., Kasan, J., & Hager, C. (2013). Dilation Behavior of Seven-Wire Prestressing Strand–The Hoyer Effect. *Construction and Building Materials, 40*, 650-658.

Burgueno, R., & Sun, Y. (2011). *Effects of Debonded Strands on the Production and Performance of Prestressed Concrete Beams.* Retrieved from www.michigan.gov/documents/mdot/MDOT_Research_Report_RC-1546_354418_7.pdf

Collins, M. P., & Mitchell, D. (1991). *Prestressed Concrete Structures*, Vol. 9. Englewood Cliffs, NJ: Prentice Hall.

Csagoly, P. A. (1991). *Shear Model for Prestressed Concrete Beams.* Florida Department of Transportation, Tallahassee, FL.

French, C. E., Shield, C. K., Klaseus, D., Smith, M., Eriksson, W., Ma, J. Z., & Chapman, C. E. (2011). Cast-in-Place Concrete Connections for Precast Deck Systems, Contractor's Final Report, NCHRP Project 10-71. Transportation Research Board of the National Academies, Washington, DC.

Hamilton, H. R., Llanos, G., & Ross, B. E. (2010). *Shear Performance of Existing Prestressed Concrete Bridge Structures* (Report No. BD545-56, RPWO #68). University of Florida. Dept. of Civil and Coastal Engineering, Gainesville, FL.

Hanna, Kromel; Morcous, George; and Tadros, Maher K., "Design Aids of NU I-Grinder Bridges" (2010). Nebraska Department of Transportation Research Reports. 64. http://digitalcommons.unl.edu/ndor/64

Hasenkamp, C. J., Badie, S. S., Tuan, C. Y., & Tadros, M. K. (2008). Sources of End Zone Cracking of Pretensioned Concrete Girders. Civil Engineering Faculty Proceedings & Presentations. Paper 5. Retrieved from http://digitalcommons.unomaha.edu/civilengfacproc/5

Hawkins, N.M., & Kuchma, D. K. (2007). Application of LRFD Bridge Design Specifications to High-Strength Structural Concrete: Shear Provisions. NCHRP Project 12-56. Transportation Research Board of the National Academies, Washington, DC.

Kaar, P. H., & Magura, D. D. (1965). Effect of Strand Blanketing on Performance of Pretensioned Girders. *Journal of the Prestressed Concrete Institute*, *10*(6), 34.

Kannel, J., French, C. E., & Stolarski, H. K. (1997). Release Methodology of Strands to Reduce End Cracking in Pretensioned Concrete Girders. *PCI Journal, 42(*1*),* 42-54.

Mayhorn, D. T., Murray, C. D., Floyd, R.W., & Prinz, G.S. (2017). Effect of Corrosion on End Region Behavior of Pretensioned, Prestressed Bridge Girders. Retrieved from http://www.ssrl-uark.com/wp-content/uploads/2018/03/2018-PCI_NBC_Mayhorn_Murray_Floyd_and_Prinz-Final_10_31_2017.pdf

MnDOT. (2017) *LRFD Bridge Design Manual.* St. Paul, MN: Minnesota Department of Transportation.

National Academies of Sciences, Engineering, and Medicine. (2017). *Control of Concrete Cracking in Bridges*. Washington, DC: The National Academies Press. Retrieved from https://doi.org/10.17226/24689.

Okumus, P., & Oliva, M. G. (2014). Strand Debonding for Pretensioned Bridge Girders to Control End Cracks. *ACI Structural Journal, 111*(1), 201.

Patzlaff, Q., Morcous, G., Hanna, K., & Tadros, M. K. (2012). Bottom Flange Confinement Reinforcement in Precast Prestressed Concrete Bridge Girders. *Journal of Bridge Engineering, 17*(4), 607–616.

Rabbat, B. G., Kaar, P. H.; Russell, H. G.; and Bruce, R. N., Jr. (1979). Fatigue Tests of Pretensioned Girders with Blanketed and Draped Strands. *Journal of the Prestressed Concrete Institute, 24*(4), 88–144.

Ross, B. E. (2012). *Function and Design of Confinement Reinforcement in Pretensioned Concrete I-Girders.* University of Florida, Gainesville, FL.

Ross, B. E., Hamilton, H. R., & Consolazio, G. R. (2013). Design Model for Confinement Reinforcement in Pretensioned Concrete I-Girders. *Transportation Research Record, 2331*(1), 59–67.

Ross, B. E., Willis, M. D., Hamilton, H. R., & Consolazio, G. R. (2014). Comparison of Details for Controlling End-Region Cracks in Precast, Pretensioned Concrete I-Girders. *PCI Journal,* 59(2), 96-108.

Russell, B. W., Burns, N. H., & Zumbrunnen, L. G. (1994). Predicting the Bond Behavior of Prestressed Concrete Beams Containing Debonded Strands. *PQ Journal, 39*(5), 60–77.

Russell, H. G., Bruce, R. N., & Roller, J. J. (2003). Shear Tests of High-Performance Concrete Bulb-Tee Girders. *Proceedings of the 3rd International Symposium on High Performance Concrete and PCI National Bridge Conference*, October 19–22, Orlando, FL. Precast/Prestressed Concrete Institute, Chicago, IL, Compact Disc.

Shahawy, M. (1993). *An investigation of shear strength of prestressed concrete AASHTO type II girders.* Structures Research Center, Florida Department of Transportation, Tallahassee, FL.

Shahrooz, B. M., Miller, R. A., Harries, K. A., Yu, Q., & Russell, H. G. (2017). *Strand debonding for pretensioned girders* (Project No. 12-91). Transportation Research Board of the National Academies, Washington, DC.

Tadros, M. K., Badie, S. S., Tuan, C. Y. (2010). Evaluation and Repair Procedures for Precast/Prestressed Concrete Girders with Longitudinal Cracking in the Web. NCHRP Project 18-14. Transportation Research Board of the National Academies, Washington, DC.

Virmani, Y. P., & Clemena, G. G. (1998). *Corrosion protection: Concrete bridges* (No. FHWA-RD-98-088). U.S. Federal Highway Administration, Washington, DC.

APPENDIX A
SUMMARY OF KEY REFERENCES

As part of the research project investigating the possible use of debonded strands in MnDOT prestressed concrete bridge girders, a literature review was conducted and potential research papers related to debonding were identified. An initial list of reference papers was compiled and listed in Table A-1 below.

The list of reference papers were reviewed for published work on the topic of debonded strands, including consideration of the shear capacity at the ends of the girders. Published research on the durability of prestressed concrete was reviewed, but specific work related to the durability of girders with debonded strands was not found. The AASHTO (2017) LRFD Bridge Design Specifications and the current MnDOT Bridge Design Manual were also reviewed. The current MnDOT Bridge Design Manual does not contain any provisions associated with debonded strands.

A fairly comprehensive research study was conducted by Shahrooz et al. (2017) for the National Cooperative Highway Research Program (NCHRP) entitled *NCHRP Report 849: Strand Debonding for Pretensioned Girders*. This report includes a review of previous research on debonded strands, a parametric study, a finite element modeling study, and an experimental program involving the load testing of multiple full-scale girders. The report addresses issues related to girder shear capacity from previous research and also explores the sections of the AASHTO code related to debonding of strands.

From NCHRP Report 849, an important aspect of the AASHTO (2017) LRFD code and a violation of current AASHTO (2017) code in previous research were highlighted. In the current AASHTO (2017) LRFD code Article 5.9.4.3.3, the percent of debonded strands in a girder end is limited to 25% based on research by Shahawy et al. (1993). This research identified a lower shear capacity for girders using debonded strands based on full-scale tests, but NCHRP Report 849 points out that sufficient longitudinal reinforcement was not added as currently required in AASHTO (2017) LRFD Article 5.7.3.5. Based on this and the research done for NCHRP Report 849, it was recommended that the percentage of debonded strands allowed by AASHTO (2017) Article 5.9.4.3.3 be increased from 25% to 60% if sufficient longitudinal reinforcement is used.

In addition to AASHTO (2017) LRFD Article 5.7.3.5 and the limit of 25% debonded strands from Article 5.9.4.3.3 mentioned previously, Article 5.9.4.3.3 also stipulates the following:

- Multiplier of 2.0 in determining the development length for debonded strands
- Limit of no more than 40% of the strands can be debonded in a single row
- Limit of no more than 40% of the debonded strands can become bonded at the same section
- Symmetrical distribution of debonded strands about center of section
- Exterior strands of each row must remain bonded.

Other articles related to debonded strands include AASHTO (2017) Article 5.12.3.3.9c which stipulates that debonded strands may not be used as reinforcement to develop a positive moment connection and AASHTO (2017) Article 5.5.4.2 which limits the resistance factor for girders with debonded strands to 0.9.

Several other published works were reviewed, including many referenced by NCHRP Report 849 and the AASHTO (2017) LRFD code itself. The research that was reviewed as part of this literature search is listed in Table A-1. An overview and key conclusions of this work are summarized below:

- In research published prior to NCHRP Report 849 (Shahawy et al. 1993), the shear capacity of girders with debonded strands was determined to be less than that of girders with bonded strands, resulting in the 25% debonded strand limit in AASHTO (2017) LRFD Article 5.9.4.3.3.
- Experimental research resulted in the recommendation that the development length of debonded strands should be taken as twice that of bonded strands. (Kaar and Margura 1965)
- Rigid debonding material was recommended over flexible material due to experimental research showing that the flexible material allowed some bonding between the strand and the concrete. (Burgueno and Sun 2011)
- Numerical models were created to analyze methods to control end cracking in prestressed girders, with results indicating debonded strands as a possible option to limit end cracking. (Kannel et al. 1998, Okumus and Oliva 2013, Kizilarslan et al. 2016)
- Experimental research was conducted that indicated debonded strands could be a possible option to limit end cracking. (Ross et al. 2014, Kizilarslan et al. 2016)
- The use of high strength concrete in the AASHTO (2017) LFRD Sectional Design Model for shear was investigated, including its use in conjunction with debonded strands. (Hawkins and Kuchma 2007)
- The durability of prestressed concrete was investigated related to exposure to various climates. (Roshore 1963, Birgul at al. 2003)

One area of concern that was not addressed directly is that of the durability of girders with debonded strands compared to girders without debonded strands. No research directly related to this topic was able to be found, but several studies on the durability of prestressed concrete in various climates were reviewed, including a durability study conducted on Michigan bridge girders, which are known to currently contain debonded strands. This topic will be investigated further in the survey of other state DOTs.

Table A-1: Literature review - list of initial reference papers

Title	Author(s)	Year
Strand Debonding in Pretensioned Beams - Precast Prestressed Concrete Bridges with Debonded Strands	O.A. Abdalla, J.A. Ramirez, and R.H. Lee	1993
Development length of 0.6-inch prestressing strand in standard I-shaped pretensioned concrete beams	R.W. Barnes, N. H. Burns, M. E. Kreger	1999
Analytical modeling of fully bonded and debonded pre-tensioned prestressed concrete members	A. N. Baxi	2005
Nebraska Bridge Office - Policies and Procedures	Nebraska Department of Roads - Bridge Division	2016
Dilation behavior of seven-wire prestressing strand - the Hoyer Effect	Vincent Briere, Kent A. Harries, Jarret Kasan, and Charles Hager	2013
Effects of debonded strands on the production and performance of prestressed concrete beams	Rigoberto Burgueno and Yi Sun	2011
A Shear Moment model for prestressed concrete beams	Paul F. Csagoly	1991
Shear performance of existing prestressed concrete bridge girders	Gustavo Llanos, Brandon E. Ross, and H.R. Hamiltion III	2009
Design Aids of NU I-girder Bridges	Nebraska Department of Roads - Bridge Division	2010
NCHRP Report 579 - Application of LRFD Bridge Design Specifications to High-Strength Structural Concrete: Shear Provisions	Neil M. Hawkins, Daniel A. Kuchma	2007
Effect of Strand Blanketing on Performance of Pretensioned Girders	Paul H. Kaar, Donald D. Margura	1965
Release Methodology of Prestressing Strands	Jeffrey J. Kannel, Catherine E. French, Henryk K. Stolarski	1998
Elastic Modulus Testing for SCC in Concrete Piling	Jordan Larsen, Wally Heyen, Lieska Halsey	2009
Shear Behavior of Prestressed Concrete U-beams	Andrew Michael Moore	2010
Bottom Flange Reinforcement in NU I-Girders	George Morcous, Kromel Hanna, Maher K. Tadros	2010
Nontraditional Limitations on the Shear Capacity of Prestressed Concrete Girders	Thomas J. Nagle, Daniel A. Kuchma	2007
Finite Element Analysis of Deep Wide-Flanged Pre-stressed Girders to Understand and Control End Cracking	Michael G. Oliva, Pinar Okumus	2011
Fatigue Tests of Prestressed Girders with Blanketed and Draped Strands	B. G. Rabbat, et al.	1978
Description of Stress-Strain Curves by Three Parameters	Walter Ramberg, William Osgood	1943

Title	Author(s)	Year
NCHRP Report 603 – Transfer, Development, and Splice Length for Strand/Reinforcement in High-Strength Concrete	Julio A. Ramirez, Bruce W. Russell	2008
Design Model for Confinement Reinforcement in Pretensioned Concrete I-Girders	Brandon E. Ross, H.R. Hamilton, Gary R. Consolazio	2013
NCHRP Synthesis 393 - Adjacent Precast concrete Box Beam Bridges: Connection Details	Henry G. Russell	2009
Design Guidelines for Transfer, Development and Debonding of Large Diameter Seven Wire Strands in Pretensioned Concrete Girders	Bruce W. Russell and Ned H. Burns	1993
An Investigation of Shear Strength of Prestressed Concrete AASHTO Type II Girders	M. Shahawy, B. Robinson, B. deV. Batchelor	1993
Shear Behavior of Full-Scale Prestressed Concrete Girders: Comparison between AASHTO Specifications and LRFD Code	Mohsen A. Shahawy, Barrington deV. Batchelor	1996
Impact of 0.7 inch Diameter Strands on NU I-Girders	Maher K. Tadros, Kromel Hanna, George Morcous	2011
The durability of prestressed concrete elements reinforced with fibres	V. Corobveanu and R. Giusca	2012
Durability and Behavior of Pretensioned Prestressed Concrete Beams	Edwin C. Roshore	1963
A 40-Year Performance Assessment of Prestressed Concrete I-Girder Bridges in Michigan	Birgul et al.	2003
Comparison of details for controlling end-region cracks in precast, pretensioned concrete I-girders	Ross et al.	2014
Evaluation of crack control methods for end zone cracking in prestressed concrete bridge girders	Pinar Okumus and Michael G. Oliva	2013
Strength of prestressed concrete members at sections where strands are not fully developed	Leslie D. Martin, Walter J. Korkosz	1995
De-bonding strands as an anchorage zone crack control method for pretensioned concrete bulb-tee bridge girders	Kizilarslan et al.	2016
NCHRP Synthesis 500 - Control of Concrete Cracking in Bridges	Henry G. Russell	2017
Sources of End Zone Cracking of Pretensioned Concrete Girders	Hasenkamp et al.	2008
Strand debonding helps minimize bridge beam end cracking	Steve Kahl	2011
NCHRP Report 849 – Strand Debonding for Pretensioned Girders	Shahrooz, B. M., Miller, R. A., Harries, K. A., Yu, Q., & Russell, H. G.	2017

APPENDIX B
SUMMARY OF SURVEY OF LOCAL BRIDGE PRODUCERS AND INSPECTORS

Currently, MnDOT does not allow debonding of strands in prestressed concrete bridge girders. As part of the research project investigation into the use of debonded strands, local prestressed concrete bridge girder producers were interviewed. The information gained from these meetings as well as the perspective of the producers on the use of debonded strands was expected to be helpful in making recommendations regarding MnDOT's use of debonded strands. Meetings were arranged with two precast concrete facilities, Forterra in Elk River, MN and County Materials in Roberts, WI. The meetings addressed their current production of MnDOT prestressed bridge girders as well as their experience producing girders with debonded strands for other states.

The meeting with Forterra representatives Jim Fink, Bryan Olson, Tony Bryant, and Patrick Gapinski took place at their production facility in Elk River, MN on April 27th, 2018. The meeting with County Materials representatives John Kaiser and Ted Casey took place at their production facility in Roberts, WI on May 15th, 2018 and also included a conference call with Gary Courneya and Brian Rowekamp from the production facility in Janesville, WI and John Clark from the facility in Salem, IL. MnDOT inspector, Brandon Derosier, also took part in the meeting at the Roberts, WI plant on May 15th, 2018.

Current MnDOT girder production

The current production of MnDOT bridge girders was discussed with both producers. The Forterra facility reported that they were currently producing 27M and 36M as well as MN45 girders, and were capable of producing MN54 and MN63 girders. The County Materials facility in Roberts, WI reported that they currently produced 27M, 36M and MN45, MN54, and MN63 girders, while the Janesville, WI facility produced up to 82MW and 96MW girders.

Both producers reported observing similar cracking tendencies. The smaller style 27M and 36M girders exhibited minimal end cracking while the larger MN and MW girders experienced noticeable web cracking at the girder ends. These cracks generally ran parallel to the draped strands in the top of the web or horizontally near the bottom of the web. Examples of this cracking are shown in Figure B-1.

Figure B-1: Web cracking observed during the production of current MnDOT girders. (Left: MN45 at County Materials in Roberts, WI Right: MN45 at Forterra in Elk River, MN)

The MnDOT release pattern was used by all facilities producing MnDOT girders, which consisted of releasing every other straight strand starting from the inside of the girder and working outward. Diagrams illustrating the current MnDOT release pattern and the current WisDOT release pattern are shown in Figure B-2.

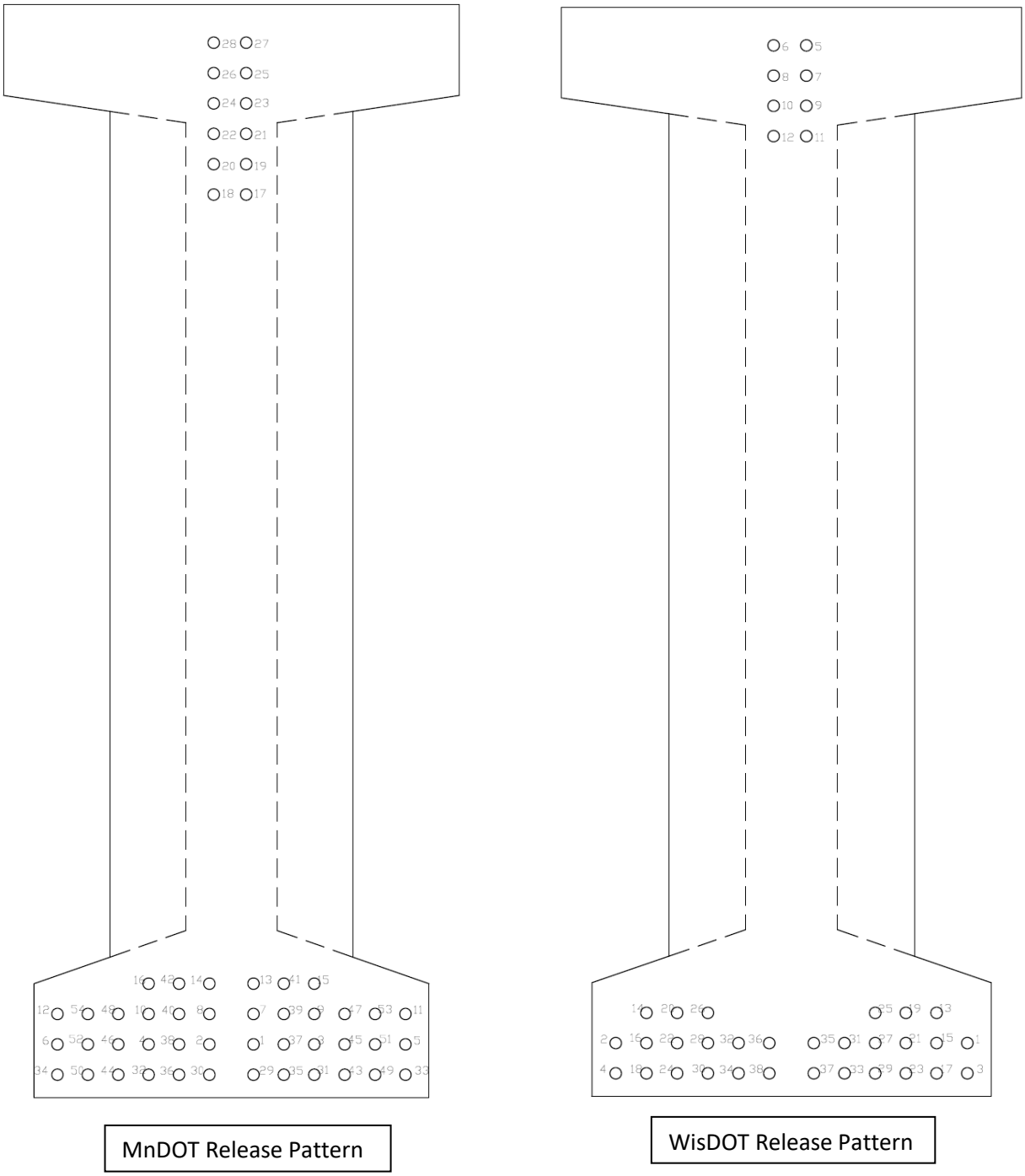

Figure B-2: Representative diagrams showing i) Current MnDOT release pattern ii) Current WisDOT release pattern

Forterra reported that the current MnDOT release pattern seemed to reduce the end cracking in the girders when it was implemented in the late 1990's to replace a release pattern similar to the current WisDOT release pattern. County Materials reported that the current MnDOT release pattern occasionally has led to spalling of the corner concrete when the outermost strands were released last. They reported requesting special permission to use the current WisDOT release pattern for 82MW shapes to reduce the risk of this spalling. An image of the spalling observed at the Roberts, WI facility is shown in Figure B-3. It was noted that the girders were spaced quite close together on the precasting bed when this spalling was observed.

Figure B-3: Image of spalling that occurred during the release of the exterior strands on a 36M girder

Both Forterra and County Materials expressed concern about the large amount of prestress used in the current MnDOT girders in comparison with girders that they fabricate for other states. Both producers stated that when a large amount of prestress is used requiring a large number of strand to be draped (i.e., up to 14 strands), two hold down points on each girder end are required to provide adequate anchorage. Forterra also reported that trying to pull more than 8 strands through a single hold down point can cause the strands to bind due to friction. Both of these conditions make producing the girders more difficult. Both producers expressed the desire to limit the number of draped strands in MnDOT girders.

Forterra and County Materials both used similar products to protect the ends of the MnDOT girders from corrosion. Forterra applied Sika 62 [sic] epoxy to the exposed ends of the strands and painted the outermost 4 feet of both girder ends with Masterseal 630. County Materials

used Sikadur 62 [sic] epoxy on the exposed ends of the strands and painted Duralprep on the outermost four feet of the girders. Per MnDOT Special Provision SB2018-2405.6, the paint was required to be applied over the greater of the following lengths (a) end four feet or (b) from the end of the beam to the end of the furthest crack. Neither producer reported significant problems with this method.

MnDOT inspector Brandon Derosier and Ted Casey with County Materials reported an investigation of different products to protect the ends of the girders including a relatively cost-effective easy-to-use solution, which was found to provide promising results.

Production of girders with debonded strands

Forterra produced girders for South Dakota DOT (SDDOT) that used debonded strands and County Materials produced girders for Wisconsin DOT (WisDOT), Illinois DOT (IDOT), Illinois Tollway, and Missouri DOT (MoDOT) that all used debonded strands. The experience of working with debonded strands for other entities made both producers good resources for information on implementing debonded strands.

Forterra used two layers of split-sheathing to debond strands for SDDOT girders. The split-sheathing allowed the placement of the strands within the forms before placing the sheathing. The County Materials facility in Roberts, WI used split-sheathing for WisDOT girders and the facility in Janesville, WI used solid sheathing, meaning that the strands must be fed through the sheathing during placement. Tie wires were used on the ends of the tubes to prevent concrete "cream" from seeping into the tubes. The County Materials plant in Salem, IL reported using a single corrugated split tubing 0.75 inches in diameter to debond strands. Both Forterra and County Materials expressed concern about using solid sheathing to debond the strands because they felt it would be more difficult to work with and would take more time to apply than split-sheathing.

For the production of girders for WisDOT, IDOT, and Illinois Tollway, County Materials reported the use of Loxon caulk to protect the ends of the strands in the girder and the use of TK sealer to coat the bottom and sides of the girder for its full length. County Materials also reported that a tar-like substance was used to protect the ends of the strands and a zinc paint was applied to the girders produced for MoDOT and Canadian Northern Railroad.

County Materials reported that no additional nonprestressed longitudinal reinforcement was added to the girder ends when debonded strands were used in the production of girders at their three plants.

Representatives from the County Materials plant in Janesville, WI commented that they did not believe that debonding strands was effective in reducing end cracking compared to only using draped strands.

The County Materials plants in Janesville, WI and Salem, IL reported considerable success in reducing end cracking with the use of a bursting plate device that is cast in the ends of the girder. The device consists of a steel plate at the bottom of the girder with threaded rods running vertically upward through the girder that are attached with nuts to another plate at the top of the girder. An image of the device is shown in Figure B-4.

Figure B-4: Bursting plate device used in IDOT, Illinois Tollway, and MoDOT girders. Image courtesy of County Materials.

All three of the County Materials plants reported using an outside-in release pattern for girders with debonded strands, similar to the pattern for WisDOT girders shown in Figure B-2.

Overview of producer opinion on debonded strands

Both Forterra and County Materials like the prospect of using debonded strands in MnDOT girders to reduce the amount of draped strands that are required. Both producers have also expressed concerns that using a rigid sheathing for debonding would considerably increase the effort that is required to place the strands within the girder forms.

APPENDIX C
SUMMARY OF SURVEY OF OTHER STATE HIGHWAY AGENCIES

As part of the *Debonded Prestressed Strand* project, other states were queried regarding their experience with debonding strands. The objective of the survey was to determine the current specifications, fabrication practices, and performance of prestressed concrete bridge girders in states with a similar climate as Minnesota. Ten states with similar climates were initially selected to take part in the survey and contacts for these Departments of Transportation (DOTs) were provided by the Minnesota Department of Transportation (MnDOT). It was later pointed out by Forterra, who took part in the survey of local bridge producers, that the State of Illinois had two highway agencies – the Illinois Department of Transportation and the Illinois State Toll Highway Authority (Illinois Tollway). Therefore, Illinois Tollway was added to the list of DOTs to be surveyed. Following the initial survey, additional follow-up surveys were conducted with the state DOTs, and sample special provisions and detail sheets of projects with debonded strands were gathered. The results of the follow-up survey (i.e., sample detail sheets and special provisions) are provided in Appendix D and incorporated into the main body of the report.

The final list of eleven highway agencies surveyed are as follows: Michigan (MDOT), Illinois (IDOT), Illinois Tollway, New York State (NYSDOT), North Dakota (NDDOT), Kansas (KDOT), Nebraska (NDOR), Wisconsin (WisDOT), South Dakota (SDDOT), Iowa (Iowa DOT), and Missouri (MoDOT). These highway agencies not only include states that allow debonding, but also states who do not allow debonding, to better understand any concerns with debonded strands.

State DOTs were asked to comment on a series of questions encompassing their current specifications, fabrication practices, or on the performance and durability of the prestressed concrete bridge girders within their state. The full list of questions and responses to those questions are provided at the end of this appendix. A few of the trends and major outcomes of the survey are summarized as follows:

- There are an increasing number of states who are moving towards debonding over draping as the preferred method of reducing end stresses in prestressed bridge girders.
- Regardless of state preferences to debond or drape, nearly all states utilize the lesser preferred method in specific situations or in combination with their primary method to reduce end stresses.
- A number of state DOTs have identified bursting steel or splitting zone reinforcement as the most effective method to control end cracking over debonding and draping (i.e., MDOT, IDOT, Illinois Tollway, KDOT, SDDOT).
- No special precautionary measures are taken by state DOTs to protect debonded strands from corrosion that is in addition to protection provided for fully bonded strands.

These survey findings are further discussed below in greater detail, as well as other comments from state DOTs.

Increasing popularity in the use of debonded strands

From the survey responses of the agencies, there is a noticeable increasing trend in the use of debonded strands as the preferred and primary method of reducing end stresses. Of the eleven agencies surveyed, ten allow the use of debonding (i.e., MDOT, IDOT, Illinois Tollway, NYSDOT, NDDOT, KDOT, MoDOT, NDOR, WisDOT, SDDOT). Five (i.e., MDOT, IDOT, Illinois Tollway, NYSDOT, and NDDOT) of the ten states that allow debonding prefer it as their primary method of reducing end stresses. Three (i.e., NDOR, WisDOT and SDDOT) of the ten states cited draping as their preferred method. Two states (i.e., KDOT, MoDOT) use both debonded strands and draped strands on a case by case basis and did not indicate a clear preference. Only one state (i.e., Iowa DOT) currently does not allow the use of debonded strands.

IDOT and Illinois Tollway are two agencies that have recently started using debonded strands within the past three years. Prior to 2015, the state of Illinois relied on draping as their primary method of reducing end stresses. However, due to safety and constructability challenges associated with draping, IDOT and Illinois Tollway prefer debonding on their new beam designs. Similarly, NYSDOT uses debonding as the primary way of reducing end stresses because "they are easier to manufacture." NYSDOT did not allow draping for a period of 20 years from the 1980's due to casualties from a hold down failure at one of their fabrication plants. Safety and constructability are key drivers to the increasing popularity in debonding. Currently, NYSDOT debonds more often than they drape. Safety and constructability are of significant importance in the construction/fabrication industry and are justification for the preference towards debonding. They also have the potential for cost savings as a result of the ease of fabrication.

One of the drawbacks of using debonding as cited by state DOTs is the inefficiency of debonding to reduce end stresses compared to draping strands (i.e., IDOT). This is due to the current AASHTO (2017) LRFD debonding limit of 25% of total strands, whereas there is no AASHTO limit on number of strands that may be draped. Similarly, MDOT has cited debonding alone isn't sufficient when end stresses are high enough. With research reports such as NCHRP Report 849 that suggest an increased percentage of debonding, there is an opportunity for obtaining more efficiency with debonding.

States such as Nebraska have further commented they will increase their debonding limits based on the findings of NCHRP Report 849. The amount of anticipated increase was unspecified, however. IDOT, which recently started debonding, stated that they do not plan to make any changes to debonding limits based on NCHRP Report 849 unless AASHTO adopts those suggestions.

With an increased limit on debonding suggested by NCHRP Report 849, it is likely that more states will switch from draping to debonding if these suggested limits are implemented by AASHTO as a result of increased efficiency combined with gains in safety and constructability.

Use of a combination of debonded and draped strands

One of the more apparent survey findings is that a combination of debonded and draped strands were allowed by state DOTs across the board. Regardless of state preferences to debond or drape, nearly all states utilize the lesser preferred method in specific situations or in combination with their primary method to reduce end stresses.

For states that prefer draping, when draping alone is not sufficient to reduce end stress, debonding is used in combination with draping (i.e., NDOR, WisDOT, SDDOT). Agencies such as NDOR who typically use draped strands as their primary option also use debonded strands in situations when section geometry or size (<50 ft) doesn't allow for draping. Similarly, states who prefer debonding utilize draping when debonding alone is not enough to reduce end stresses. (i.e., MDOT, IDOT, Illinois Tollway, NYSDOT, NDDOT). IDOT also commented they still permit the use of a high number of draped strands (sixteen 0.5" strands) on their older beam designs. Only six 0.6" draped strands are allowed on newer beam designs.

The choice between debonding and draping strands is not an EITHER/OR option, as survey results show that debonding AND draping can be used together as two supplementary methods to reduce end stresses.

Use of bursting steel or splitting zone reinforcement

An unexpected result of the survey is that several states have found bursting steel or splitting zone reinforcement to be the most effective method to control end cracking. Among these states are MDOT, IDOT, Illinois Tollway, KDOT, and SDDOT. These state DOTs all use debonded strands, draped strands or a combination of both to control end stresses and have confirmed these methods are effective to reduce end stresses. Yet, when asked to describe the most effective method they have found to control end cracking, five of eleven states responded to this question stating that bursting steel, splitting zone reinforcement, or tight spacing of shear stirrups in the end zone is the most effective method. Only one state found debonding to be the most effective method, but indicated that debonding did not eliminate cracking (NYSDOT). Another state responded that a thickened web to form an endblock was the most effective method to control end cracking (NDDOT). The other four states in the survey did not respond to

this question with a specific method. The overwhelming response from state DOTs was that transverse reinforcement in the end zone as the most effective method to control end cracks.

Debonding or draping of strands reduces the stresses that act in the end zone at prestress release, consequently reducing cracking in the end zones. End zone reinforcement (stirrups) act to resist the stresses after cracking and provide the girder with the necessary capacity to reduce the crack widths or minimize cracking associated with the bursting force at prestress release. The survey responses clearly suggest that states are placing an emphasis on transverse reinforcement requirements in the end zone to resist the bursting stresses caused by the strands at prestress release. Indeed, this type of reinforcement is a major contributor to reducing end zone cracking in addition to the stress reduction effects of debonding.

Corrosion protection of debonded strands

State DOTs have indicated that no special precautionary measures are taken to protect debonded strands from corrosion or mitigate chloride ingress through sheathing that is any different than what they would typically do for the exposed ends of fully bonded strands. States have reported no evidence of deterioration or corrosion of in-field girders with debonded strands. It is worth noting however, that in certain situations, all of the states surveyed encase the ends of their prestressed girders in concrete (built integrally into the diaphragm) which guards the strands from exposure to corrosive material such as the salt often applied to roads in the winter. The surveyed state DOTs apply sand and salt to their roads in the winter, similar to MnDOT.

Several different methods are used by states to protect debonded and fully bonded strands from corrosion. Some of the common types of corrosion protection methods are as follows:

- Sealing beam ends with an elastomeric sealer when there is an open joint above beam ends and treatment with asphaltic material (MDOT)
- Application of a zinc-spray coating regardless of beam encasement in concrete (IDOT)
- Addition of corrosion inhibitor and sealing beam ends with two coats of penetrating silane sealer (NYSDOT)
- Encasement in concrete (NDDOT, NDOR)

Other relevant findings

State DOTs commented on other requirements associated with the use of debonding. One requirement specific to debonding is that if girders are built integrally into a diaphragm, the debonded strands cannot be used as reinforcement for the positive moment connection (i.e., IDOT, KDOT).

Regarding the procedure for releasing strands in the precasting bed, there is not any apparent or consistent standard procedure among the state DOTs that can be derived from the survey responses. Several states indicated the release of prestressing strands is a delegated responsibility to the fabricators and approved by the state DOTs through shop drawings (IDOT, NYSDOT, KDOT, MoDOT, SDDOT).

The full list of survey questions and responses are provided in the following pages.

SURVEY RESPONSES

As part of the study on using debonded strands to reduce end stresses in bridge girders, several states were queried regarding their experience with debonding. To explore the use of debonded strands as a viable design option for the Minnesota Department of Transportation (MnDOT), the survey component of the study involved querying Departments of Transportation (DOTs) with similar climates as Minnesota. Initially, ten states or DOTs who had a climate comparable to the state of Minnesota were selected to participate in this survey.

The states selected for surveying included: Michigan (MDOT), Nebraska (NDOR), Illinois (IDOT), Wisconsin (WisDOT), North Dakota (NDDOT), South Dakota (SDDOT), Iowa (Iowa DOT), Kansas (KDOT), Missouri (MoDOT), and New York State (NYSDOT). It was later pointed out by Forterra, a precast producer fabricating bridge girders for Minnesota and other states, that Illinois had two separate highway agencies – the Illinois Department of Transportation and the Illinois Tollway. Therefore, the Illinois Tollway was added to the list of highway agencies to be queried. Contacts for the initial ten DOTs were provided by Brian Homan at MnDOT, while the Illinois Department of Transportation provided contacts for the Illinois Tollway. Summarized below are the responses of each state to the survey questions. Parenthetical italicized comments within the survey responses below are the researcher's commentary on the survey responses.

SECTION 1: OVERVIEW OF DEBONDING/DRAPING PRACTICE

1) **Does your state currently permit the use of debonded strands in prestressed concrete bridge girders?**
    a. The following state DOTs allow the use of debonded strands:
        - MDOT
        - IDOT
        - ILLINOIS TOLLWAY
        - NYSDOT
        - NDDOT
        - KDOT
        - MoDOT
        - NDOR
        - WisDOT
        - SDDOT
    b. The following state DOTs do not allow the use of debonded strands:
        - Iowa DOT

2) **If you answered "Yes" to Question 1, please describe situations where debonding is used and why.**

MDOT: Used to eliminate or reduce draped strands and reduce the required release strength whenever possible, control end stresses.

IDOT: Debonding and draping is used to control end stresses. In our newer PPC beam designs we prefer debonding before draping for several reasons. The release of draped strands at harping points is very challenging to do in combination with the straight strands in order to prevent beam cracking. Draped strands also create additional losses that are difficult to quantify when multiple beams are cast in the same bed and the draped strands go up and through multiple bulkheads. Our fabricators report many dangers and constructability issues with using draped strands. We limit draped strands to six 0.6" strands on our new beam designs. Our older beam designs which use 1/2" strands permit up to 16 draped strands but only 8 may be draped at one location due to the capacity of the hold-down devices.

ILLINOIS TOLLWAY: To reduce the potential for beam end cracking due to high internal stresses during detensioning.

NYSDOT: We use debonding as the primary way of reducing or eliminating tension in the ends of our prestressed beams.

NDDOT: Debonding is used on most beams to eliminate the use of draped strands.

KDOT: In situations where straight strands are used in the prestress beam and a section is stretched beyond its economical length range – debonding is used to control excessive compressive stresses in the end region of the beam.

MoDOT: Allowed on P/S-I and P/S Box Girders with an enclosed concrete diaphragm (i.e., integral end bents, fixed intermediates).

NDOR: We prefer to drape. When draping is not enough to relieve stresses or the girder is too short (<50 ft) we debond. Inverted tee girders cannot have draped strands. Debond to lessen bursting force.

WisDOT: In Bridge Manual

SDDOT: Debonding strands near beam ends is allowed where not enough strands can be feasibly draped to achieve desired stress levels.

3) **If you answered "No" to Question 1, please explain why debonding is not used/allowed (e.g., concerned about corrosion of strands, reduced shear strength, etc.). Then proceed to Section 2.**

Iowa DOT: Possibility of ineffective debonding

4) **Please describe situations where draping or combination of draping and debonding would be used and why.**

MDOT: When end stresses are high enough and debonding alone isn't sufficient, draped strands are introduced.

IDOT: The AASHTO code permits only a certain percentage of strands in each row and a certain overall percentage to be debonded. When we need more relief of end stresses than that permitted by the AASHTO debonding limits we will add draping in combination with the debonding. Draping strands is more efficient than debonding strands to relieve end stresses but we debond and then drape due to issues noted in the previous question.

ILLINOIS TOLLWAY: The use of a combination of draping and debonding will be used in situations where we want to eliminate or reduce the number of draped strands needed in comparison to the quantity needed when using fully bonded strands. In addition, debonding creates less concentrated force transferred into the concrete. As a result, the principal tensile strains in the upper web area can be reduced below the cracking limit.

NYSDOT: When there is a significant amount of tension at the top of the beam end we use a combination of draped strands and debonded strands.

NDDOT: Draping is only used if debonding will not achieve the desired end beam stresses.

KDOT: Draping (harping) strands used when straight strands will not work for the required design capacity of the chosen beam section. Sections stretched beyond their economical length range most likely requires draping (harping) and debonding.

MoDOT: Debonding is used to reduce compressive stresses at the ends of P/S-I girders. Draping is used to reduce compressive/tensile stresses at ends of girders.

NDOR: We always drape first then debond.

WisDOT: In Bridge Manual

SDDOT: Debonding strands near beam ends is allowed where not enough strands can be feasibly draped to achieve desired stress levels.

Iowa DOT: Longer spans, Stress issues at beam ends (*Assuming they are talking about situations where draping is used, since they don't allow debonding*)

SECTION 2: SPECIFICATIONS/PRACTICES

5) **Based on your experience or new research (e.g., NCHRP Report 849), please indicate if there are any plans to change or modify your State's specifications related to debonded strands. If so, please describe the proposed changes and reasoning.**

MDOT: Not at this time.

IDOT: We began debonding in 2015 so we aren't planning any changes in the near future. We will monitor how the debonding process works before making revisions. The recommendations of NCHRP 849 appear very aggressive and we will likely not adopt the suggestions in there unless AASHTO does.

ILLINOIS TOLLWAY: No Changes are anticipated.

NYSDOT: There are no current plans to change our specifications.

NDDOT: No Response

KDOT: Not at this time.

MoDOT: No Response

NDOR: We will increase percentage of debonded strands based on NCHRP 849.

WisDOT: No, but would be willing to listen to designer who wanted to exceed AASHTO.

SDDOT: No changes anticipated.

Iowa DOT: No changes anticipated.

6) **Please indicate the maximum number (or percentage, if applicable) of draped strands; the maximum number (percentage, if applicable) of debonded strands; and the combination of draped and debonded strands allowed and reason for the limitations (e.g., number of draped strands limited by capacity of hold-downs).**

MDOT: Up to four draped strands for Type I-IV beams, max 40% can be debonded;
Up to eight draped strands for MI -1800 girder, max 40% debonded;
Up to 21 draped strands for Bulb T beams, max 40% debonded;
Multiple combinations of the above have been used;
Draped strands are used as a last resort when debonding alone can't control end stresses. Hold down capacity for fabricators sets the limit.

IDOT: 16 for ½ in strands and six for 0.6 strands. We follow AASHTO on debonded strands which is a max of 40% per row and 25% total. We debond and then drape. Draping kicks in when AASHTO debonding limits can't satisfy end stresses.

ILLINOIS TOLLWAY: Maximum number of draped strands is six. Maximum number of debonded strands is 25% of total strands, and not more than 40% or four, whichever is greater, at any section/row. This suggested level of debonding also has the potential to eliminate most of the draped strand, the inclined cracks, and avoid the formation of Y cracks, if the pattern of debonded strands is carefully selected. Minimizing the number of draped strands is for safety and constructability.

NYSDOT: NEBT and PCEF beams have a maximum of 10 draped strands, AASHTO I-beams have a maximum of 8 draped strands and are rarely used. We have a maximum of 25% of the total number of strands can be debonded with a maximum of 40% of the strands in any one row. We experienced shear cracks at 45 degrees on beams with most of the strands debonded and believe they acted more like plain reinforced concrete beams rather than prestressed beams in the way they handled shear.

NDDOT: AASHTO maximum (*on debonding*).

KDOT: Maximum number of draped strands based on strand pattern used for design and capacity of hold-down device. Maximum number of debonded strands (*per*) AASHTO LRFD Specifications.

MoDOT: AASHTO (*LRFD*) requirements followed for debonding. Number of draped strands limited by hold-down device capacity.

NDOR: Debonding limits from AASHTO. We will increase based on NCHRP 849. Draped strands limited by hold down force and not used on girders <50 ft.

WisDOT: Draping allowed per standard WisDOT patterns in Chapter 19 of the manual. Debonding specified per AASHTO standards.

SDDOT: Debonded strands not mentioned in state specifications, we would follow AASHTO LRFD Specifications where applicable. Approximately 1/3 the total number of strands are typically draped.

Iowa DOT: See table (*no information provided for Iowa in Table E-1*)

7) Please indicate whether the ends of prestressed girders in your state are typically encased in concrete (built integrally into the diaphragm) and reasoning, if applicable.

MDOT: When a bridge is designed continuous for Live Load then the beam ends are encased in concrete. When there is an expansion joint above they are not.

IDOT: The majority of our structures are integral structures, so the beam ends would be encased in concrete. Nonetheless we still apply a zinc-spray coating on the strand ends for corrosion protection.

ILLINOIS TOLLWAY: Yes. Reasoning is that pretensioning strands that are not debonded at the end of the girder are extended into the continuity diaphragm as positive moment reinforcement. The extended strands are anchored into the diaphragm by bending the strands into a 90-degree hook or by providing a development length as specified in Article 5.11.4. *(AASHTO (2004) LRFD Bridge Design Specifications)*

NYSDOT: Our preferred abutment type is the integral abutment and we also use semi-integral abutments, both encase the end of the beams. At locations with expansion joints, we do not encase the ends of the beams.

NDDOT: All beams are encased in concrete. Exposed beam end can be exposed to salts and deterioration.

KDOT: Prestressed girders are encased at the abutment and piers. At the abutments to eliminate the expansion joint and at the piers for the bridge to be continuous over the supports.

MoDOT: Typically encased for bridge lengths <500 ft. Straight strands in bottom flange are not encased at joints with expansion devices.

NDOR: Always tied into diaphragm. Extended strands into diaphragm for development and to resist rotation.

WisDOT: Mostly encased. Integral abutments require less maintenance.

SDDOT: Yes, built integrally into the diaphragm and abutments.

Iowa DOT: Typically encased in diaphragm.

8) For the specific case of debonded strands, please describe any requirements associated with encasement of the girder ends.

MDOT: There are no requirements to encase when there is debonding.

IDOT: We don't have any special requirements for debonded strands of girder ends encased in a diaphragm except we don't permit these strands to be extended into the diaphragm to satisfy anchorage requirements.

ILLINOIS TOLLWAY: Strands that are debonded or shielded at the end of a member are not be used as reinforcement for the positive moment connection. There are no requirements for development of these strands into the girder ends.

NYSDOT: We have no additional requirements for beams with encased ends though integral abutment bridges have strands and bars that extend into the abutment to fix the beam to the abutment.

NDDOT: No Response

KDOT: The strands extended into the diaphragm cannot be debonded per AASHTO LRFD Specifications.

MoDOT: No requirement, but typically debonding is not used at expansion joints.

NDOR: No additional requirements

WisDOT: Encasement is not required. Non-encased ends require sealing per our Chapter 19 Standards.

SDDOT: None

Iowa DOT: N/A

9) **Please indicate the whether you require the addition of mild longitudinal reinforcement (e.g., U-shaped horizontal bars) in conjunction with debonded strands. If yes in some cases, please describe.**

MDOT: Mild steel is always used in the beam ends regardless of debonding.

IDOT: We do not add additional mild steel because we operate within the permissible limits of AASHTO.

ILLINOIS TOLLWAY: Yes. Potential cracks are more likely to form in the precast girder at the inside edge of the bearing area and locations of termination of debonding. Since cracking within the development length reduces the effectiveness of the development, the reinforcement should be detailed to avoid this condition. It is recommended that reinforcement be developed beyond the location where a crack radiating from the inside edge of the bearing may cross the reinforcement.

NYSDOT: We do not require the addition of mild longitudinal reinforcement due to debonded strands, we may add additional transverse containment bars (to handle bursting forces) due to debonding if the transfer area is well beyond the beam end.

NDDOT: No Response

KDOT: Follow AASHTO LRFD Specifications and the KDOT design manual for the design of reinforcement, we don't require additional due to debonding.

MoDOT: No.

NDOR: Additional U-shaped bar (#5) added when debonded strands are used.

WisDOT: We use those bars for all girders (*regardless of debonding*).

SDDOT: No Response

Iowa DOT: N/A

10) **Please indicate when your state began to use debonded strands.**

MDOT: Early to mid-1970's

IDOT: 2015

ILLINOIS TOLLWAY: 2015

NYSDOT: I believe we started using them in the 1980's.

NDDOT: No Response

KDOT: First prestress designs in the early 1970's, not sure if debonding started then too.

MoDOT: Possibly in conjunction with the use of Conspan (estimated year of 2005).

NDOR: Mid 1990's with use of IT girders.

WisDOT: Not sure, but a while ago.

SDDOT: No Response

Iowa DOT: N/A

11) Please indicate how your practice of debonding has changed over the years, if applicable.

MDOT: The types of debonding material used have changed over the years.

IDOT: Illinois investigated debonded strands over 30 years ago but there were many problems associated with it and several reports on these issues as well. We are still pretty new to debonding, but we are satisfied to this point.

ILLINOIS TOLLWAY: N/A. (*Debonding use started recently*).

NYSDOT: In the late 1990's we added the maximum percent of total number of strands and the maximum percent of strands in each row requirements, but otherwise we have not changed our debonding policies. Note: we did not allow draped strands from the early 1980's for almost 20 years due to casualties from a hold down failure at one of our fabrication plants.

NDDOT: No Response

KDOT: No change.

MoDOT: Not sure, might have used grease in the past.

NDOR: On certain projects we have debonded more than allowed by AASHTO.

WisDOT: We still only use when necessary, but is not very often.

SDDOT: No Response

Iowa DOT: N/A

SECTION 3: FABRICATION

12) **Please describe standard procedure for releasing strands in the precasting bed (e.g. start with the outermost strands and work inward, releasing draped strands after outermost bottom strands, and releasing hold downs after ½ of draped strands – WisDOT method).**

MDOT: Strands are released to minimize lateral eccentricity of prestress.

IDOT: Illinois requires symmetry and we require a slow release of the strand as opposed to an abrupt cut but beyond that we view this as a "ways and means" issue of the fabricator. So, the fabricator depicts the detensioning sequence on their shop drawings. This places the responsibility on the fabricator to know their operation. Some fabricators may place counterweights on the top of the beams when releasing the hold down devices to prevent the sudden release of energy from causing cracks and then remove the weight slowly - but this is more expensive.

ILLINOIS TOLLWAY: The bonded and unbonded strands in the bottom flange of the girder should be uniformly spaced across the flange rather than being grouped. The central strands should remain bonded where possible to control bottom flange cracking. The distribution of bonded strands in the bottom flange is very important. The designer shall not debond the outermost or innermost strand in a row, nor two adjacent strands. (*Not relevant to this specific question*).

NYSDOT: Strands can be cut either mechanically or by flame cutting. Strands are cut using a symmetrical cutting sequence proposed by the fabricator and approved by DOT. Strands are cut in a manner to avoid sudden transfer of stress (such as a 6" sweeping motion used in flame cutting, etc.)

NDDOT: Strands cut from top upper outside strands and work in toward the center until entire row is cut. After that row is done, the row below it is cut until all strands are cut.

KDOT: No required standard procedure, releasing sequence is indicated on the shop plans that we review and approve.

MoDOT: Strand release is determined by Precaster in a method that produces the least eccentricity load. Typically, from outside to inside.

NDOR: No Response

WisDOT: WisDOT method.

SDDOT: Let fabricator use their best practice.

Iowa DOT: Refer to Iowa DOT IM 570.

13) Please list girder section types and sizes where debonding is typically used. (If you do not use or plan to use debonding, please proceed to Section 4.)

MDOT: All prestressed beams and depths may use debonding.

IDOT: This is available in our ABD 15.2 Memo

ILLINOIS TOLLWAY: IL 27, IL 36, IL 45, IL 54, IL 63 and IL 72

NYSDOT: Slab Units, Box Beams, NEBT and PCEF Bulb Tees, AASHTO I-beams, Deck Bulb Tees and NEXT Beams all sizes except we do not debond strands in slab units <18" in depth.

NDDOT: All types and sizes are used.

KDOT: Any of our beam sections can be used with debonding of strands especially if straight strands are used.

MoDOT: Debonding is typically requested by Precaster to maximize bed usage. This usually will encompass all I-girders, Bulb T's, and Box beams at some time.

NDOR: NU 900 to NU 2000; IT 400-IT 900

WisDOT: 28" girders at times. Even fewer times for other shapes.

SDDOT: No Response

Iowa DOT: N/A

14) **Please indicate sleeve types used to debond prestressed strands.**

MDOT: Double Split-Sheathing Tube

IDOT: Rigid/Solid-Sheathing Tube

ILLINOIS TOLLWAY: Flexible PVC closed, tubular type (i.e. without a slit along its length).

NYSDOT: Split-Sheathing Tube

NDDOT: Split-Sheathing Tube

KDOT: No requirement of a specific type.

MoDOT: Split-Sheathing Tube

NDOR: Split-Sheathing Tube

WisDOT: Split-Sheathing Tube

SDDOT: No Response

Iowa DOT: Minimal.

SECTION 4: PERFORMANCE AND DURABILITY

15) **Please indicate the types of end cracking typically observed in your prestressed bridge girders WITHOUT debonding.**

MDOT: Almost all prestressed girders use some amount of debonding.

IDOT: Inclined Cracks; Horizontal Web Cracks; We provide extensive detailing to prevent these cracks. Please see our Manual for Fabrication of Precast Prestressed Concrete Products for crack limits. (“*Extensive detailing” assumed to refer to the bursting steel detail that Illinois has developed*).

ILLINOIS TOLLWAY: Inclined Cracks.

NYSDOT: Inclined Cracks, Horizontal Web Cracks.

NDDOT: None

KDOT: No problems with cracking.

MoDOT: Inclined Cracks; Horizontal Web Cracks; Y Cracks.

NDOR: Inclined Cracks; Horizontal Web Cracks

WisDOT: Inclined Cracks Horizontal; Web Cracks Y Cracks; Our cracking is less prolific than what it used to be.

SDDOT: Minimal cracking noticed.

Iowa DOT: N/A

16) Please indicate the types of end cracking typically observed in your prestressed bridge girders WITH debonding.

MDOT: Inclined Cracks, Horizontal Web Cracks, Y Cracks

IDOT: Inclined Cracks; Horizontal Web Cracks.

ILLINOIS TOLLWAY: Can't see if there is any cracking since it is covered by diaphragms.

NYSDOT: Inclined Cracks, Horizontal Web Cracks, Same type of cracking only fewer cracks and the cracks that occur are less severe.

NDDOT: None

KDOT: No problems with cracking.

MoDOT: Inclined Cracks; Horizontal Web Cracks; Y Cracks.

NDOR: Inclined Cracks; Horizontal Web Cracks

WisDOT: Not sure if it varies as debonding is infrequently used.

SDDOT: Not Applicable, our state does not use debonding. (*From responses to other questions, South Dakota allows debonding but don't use it often enough to comment on its performance*).

Iowa DOT: N/A

17) Please indicate whether cracking is affected by the occupancy of the precasting bed (e.g., more [describe type of crack] observed when the bed is full and there is less space between girders).

MDOT: Ask MDOT inspector listed below.

IDOT: There are many factors that can affect cracking from detailing to concrete strength to release patterns, etc. See our Fabrication Manual.

ILLINOIS TOLLWAY: No Response

NYSDOT: Minimal difference

NDDOT: No.

KDOT: No Response

MoDOT: Unknown.

NDOR: No Response

WisDOT: We have found that girder ends not at the end bulkheads are more likely to crack due to elastic shock of the strand being cut further from the girder end.

SDDOT: N/A.

Iowa DOT: None

18) If your state uses debonding, please indicate whether the use of debonded strands has resulted in changes in the end cracking observed in your prestressed bridge girders (e.g., list changes in types/sizes/quantities of cracks observed).

MDOT: No change.

IDOT: We are pretty new at debonding yet but to this point we have not seen additional cracks.

ILLINOIS TOLLWAY: Less to none inclined cracks.

NYSDOT: Debonding has reduced the number of cracks and the size of cracks.

NDDOT: No change

KDOT: No changes.

MoDOT: Unknown.

NDOR: No changes in amount of cracking.

WisDOT: Not sure if it varies as debonding is infrequently used.

SDDOT: Don't use debonding enough [to observe any changes in end cracking].

Iowa DOT: N/A

19) Please describe any other methods used by your state to control end cracking.

MDOT: Bursting steel is used and encloses strands typically for a length equal to the beam depth.

IDOT: This is the Illinois detail that we developed. It works pretty effectively.

ILLINOIS TOLLWAY: Use of splitting steel details in the splitting zone is increased to handle the larger prestressing forces. The steel consists of 1" diameter threaded rods and D31 wire bars as per AASHTO splitting zone requirements. 50% of required steel area is placed *h*/8 from the beam end. Other new features include bottom flange confinement reinforcement welded to the bottom plate rather than using shear studs. This provides better confinement and reduces congestion. Also, jam nuts from the threaded rods to the bottom plate were added to reduce the slack in the threads and help minimize cracking.

NYSDOT: Designs sometimes require higher concrete strength at release to minimize cracking.

NDDOT: No Response

KDOT: The following transverse reinforcement is provided (if it exceeds AASHTO requirements for end region reinforcement) - #5 stirrups at 3 in. spacing for a distance of *h*/4 from the end of the beam for the splitting zone.

MoDOT: We use a standard anchorage zone reinforcement pattern.

NDOR: NU girders can use 3 legs of vertical reinforcement if necessary.

WisDOT: N/A

SDDOT: Tight spacing of shear stirrups as required by specs.

Iowa DOT: AASHTO requirements (*assuming they are referring to the AASHTO requirements for bursting steel/splitting zone reinforcement within h/4 because they don't use debonding and AASHTO requirements don't comment on draping*)

20) Please describe the most effective methods you have found to control end cracking.

MDOT: Mild steel and bursting steel helps control end cracking.

IDOT: Bursting steel detail (*pictured in survey form*)

ILLINOIS TOLLWAY: All of the above (*Bursting steel, debonded strands, draping, etc*.)

NYSDOT: Debonding is the most effective method, but it doesn't eliminate cracking.

NDDOT: The web is thickened to form an end block.

KDOT: Transverse reinforcement exceeding AASHTO requirements - #5 stirrups at 3 in. spacing for a distance of *h*/4 from the end of the beam for the splitting zone.

MoDOT: Haven't found one yet.

NDOR: No Response

WisDOT: N/A

SDDOT: Tight spacing of shear stirrups as required by specs.

Iowa DOT: AASHTO requirements (*assuming bursting/splitting zone reinforcement within h/4 because they don't use debonding and AASHTO requirements don't comment on draping*)

21) Please indicate how strands in prestressed bridge girders are protected from corrosion in your state, and how long this practice has been in effect or changed over time.

MDOT: Beam ends are sealed with an elastomeric sealer when there will be an open joint above the beam ends. Previously not done, changed within the last 10-15 years. All beams are treated with an asphaltic material after the strands are cut flush with the beam end.

IDOT: Previously addressed.

ILLINOIS TOLLWAY: Grouting.

NYSDOT: Since about 2000, we have HP concrete and require Chloride Penetration tests (AASHTO T259) with results P< 0.025% at 1". We add CI in mix (5 gal./cy) and our beams are coated with 2 coats of penetrating silane sealer.

NDDOT: Encased in concrete.

KDOT: From Design manual - Protect Prestressed Beams under all expansion joints by using an approved epoxy based “Substructure Waterproofing Membrane” to cover the end section of each beam. End section is defined as all beam surfaces within two beam depths from the ends of the beam. Use epoxy coated reinforcement within two beam depths from the beam end next to an expansion joint. For Prestressed Beams where salt spray is possible (i.e., “Tunnel Effect” structures) use epoxy reinforcement in all beams, also use an approved masonry coating to protect all surfaces of the beams over traffic within the spray area. At locations where bridge deck drain inlets (pans) extend over the beam, protect the top of the beam with an approved epoxy based “Substructure Waterproofing Membrane.”

MoDOT: No corrosion protection used.

NDOR: No protection. [Always] Casting the girder ends in diaphragms. We have used painting on girder ends under joints.

WisDOT: WisDOT Bridge Manual Chapter 19 girder standards has note for coating girder ends.

SDDOT: N/A. Don’t use debonding enough.

Iowa DOT: Beam ends coated with epoxy material. Implemented within the last 5 years.

22) If your state uses debonding, please describe any special precautions taken to protect debonded strands from corrosion or to mitigate chloride ingress through sheathing.

MDOT: Beam ends are sealed at minimum with asphaltic material.

IDOT: We don't take any additional precautions.

ILLINOIS TOLLWAY: After strands are fully tensioned, the sheathing ends are sealed with suitable material, such as a silicone sealant.

NYSDOT: No additional precautions.

NDDOT: None

KDOT: None

MoDOT: Other than sheathing, none.

NDOR: None

WisDOT: No specific requirements. Same coating for exposed girder ends apply in Chapter 19 standards.

SDDOT: N/A. Don't use debonding enough.

Iowa DOT: N/A

23) What products are regularly applied to roads in your state during the winter to increase traction?

MDOT: Sand, Salt.

IDOT: Salt.

ILLINOIS TOLLWAY: Salt.

NYSDOT: Salt

NDDOT: Salt.

KDOT: Sand/Salt mixture for when snow builds up on roads. Pretreat with de-icer before predicted ice/snowstorm.

MoDOT: Sand, Salt.

NDOR: Sand, Salt, Beet Juice.

WisDOT: Sand, Salt.

SDDOT: Salt; Mag-Chloride limited use.

Iowa DOT: Sand, Salt.

24) If your state uses debonding, please describe the in-field service performance of girders in your state that have debonded strands (e.g. indicate years in service and any evidence of corrosion, cracking, or other type(s) of deterioration).

MDOT: The girders have performed well and in service for a number of years. Corrosion and cracking experienced have not been unusual.

IDOT: Our debonded beams have not been in service very long so we don't have data on this.

ILLINOIS TOLLWAY: Relatively 3 years in service. Hard to tell.

NYSDOT: Over three decades of use and the only difference from beams without debonding were a few beams that had more than 50% of the strands debonded. The bridge that led to our 50% rule was a 3-span adjacent box beam bridge with short end spans built about 25 years ago. The designer used the same depth boxes in all 3 spans, but the end spans had very few strands and most of the strands were debonded at the ends of the short beams. Some of those beams developed 45-degree shear cracks and the issue was brought to our attention. We determined that the shear cracks occurred because the end of the beams were acting like regular concrete beams, not prestressed beams (the stress cracks were at 45 degrees vs. ~30 degrees). There were not enough shear ties for a regular (nonprestressed) concrete beam design. We do not have access to the photos or analysis from the investigation completed in the mid 1990's.

NDDOT: No problems.

KDOT: No reported evidence of these types of deterioration of in-field performance of girders that warrants corrective action.

MoDOT: Unknown. Performance seems to be same as regular girders.

NDOR: No Response

WisDOT: Not sure – used infrequently.

SDDOT: N/A. Don't use debonding enough.

Iowa DOT: N/A

APPENDIX D
SURVEY FOLLOW-UP SAMPLE DETAIL SHEETS AND SPECIAL PROVISIONS

Nebraska Department of Roads (NDOR)

DEBONDING PRESTRESSING STRANDS
(7-6-1217)

General

Where shown, debond prestressing strands by encasing the strands in plastic sheathing along the entire length shown and sealing the ends of the sheathing with waterproof tape.

Materials

Sheathing must:

1. Be split or un-split flexible polymer plastic tubing
2. Have a minimum wall thickness of 0.025 inch
3. Have an inside diameter exceeding the maximum outside diameter of the strand by 0.025 to 0.14 inch
4. Not react with the concrete or steel

Split sheathing must have a minimum overlap of 3/8 inch.
Waterproofing tape must be flexible adhesive tape.

Construction

Distribute the debonded strands symmetrically about the vertical centerline of the girder. The debonded lengths of pairs of strands must be equal. Do not terminate debonding at any one cross section of the member for more than 40 percent of the debonded strands or 4 strands, whichever is greater. Do not debond the outside strands. Thoroughly seal the ends of the sheathing encasing the strand with waterproof tape before placing the concrete to prevent the intrusion of water or cement paste. Do not debond the extended strands.

Payment

Full compensation for Debonding Prestressing Strands shall be considered as included in the contract price paid for the Pay Item “Precast-Prestressed Concrete Superstructure at Sta ___”, and no separate payment will be made.

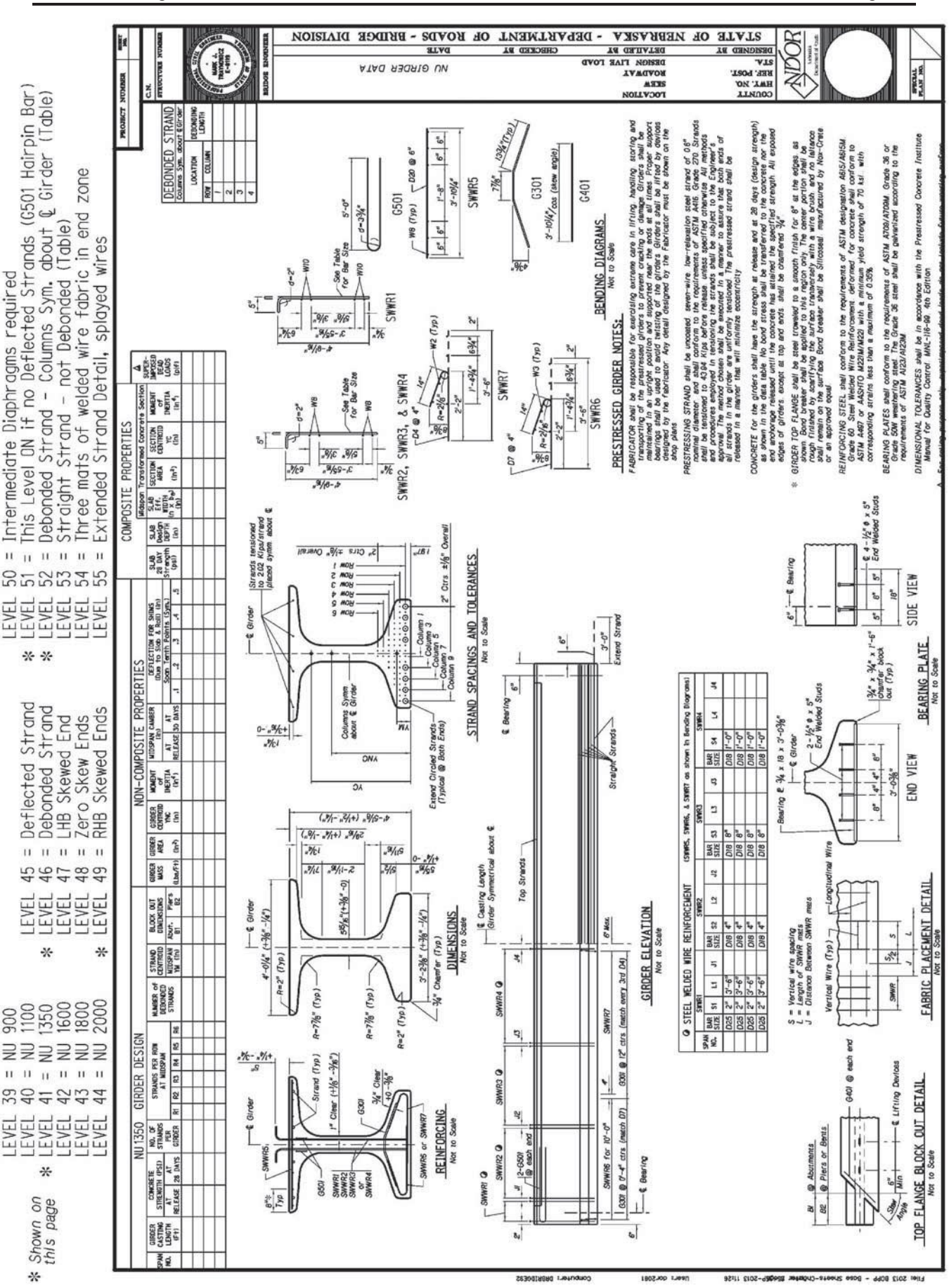
LEVEL 39 = NU 900
LEVEL 40 = NU 1100
* LEVEL 41 = NU 1350
LEVEL 42 = NU 1600
LEVEL 43 = NU 1800
LEVEL 44 = NU 2000
* Shown on this page
LEVEL 45 = Deflected Strand
LEVEL 46 = Debonded Strand
LEVEL 47 = LHB Skewed End
LEVEL 48 = Zero Skew Ends
LEVEL 49 = RHB Skewed Ends
LEVEL 50 = Intermediate Diaphragms required
LEVEL 51 = This Level ON if no Deflected Strands (G501 Hairpin Bar)
LEVEL 52 = Debonded Strand - Columns Sym. about ℄ Girder (Table)
LEVEL 53 = Straight Strand - not Debonded (Table)
LEVEL 54 = Three mats of welded wire fabric in end zone
LEVEL 55 = Extended Strand Detail, splayed wires
NU 1350 GIRDER DESIGN
NON-COMPOSITE PROPERTIES
COMPOSITE PROPERTIES
DEBONDED STRAND
STATE OF NEBRASKA - DEPARTMENT OF ROADS - BRIDGE DIVISION
NU GIRDER DATA
REINFORCING
DIMENSIONS
STRAND SPACINGS AND TOLERANCES
GIRDER ELEVATION
BENDING DIAGRAMS
PRESTRESSED GIRDER NOTES
BEARING PLATE
SIDE VIEW
END VIEW
FABRIC PLACEMENT DETAIL
TOP FLANGE BLOCK OUT DETAIL

Illinois Department of Transportation (IDOT)

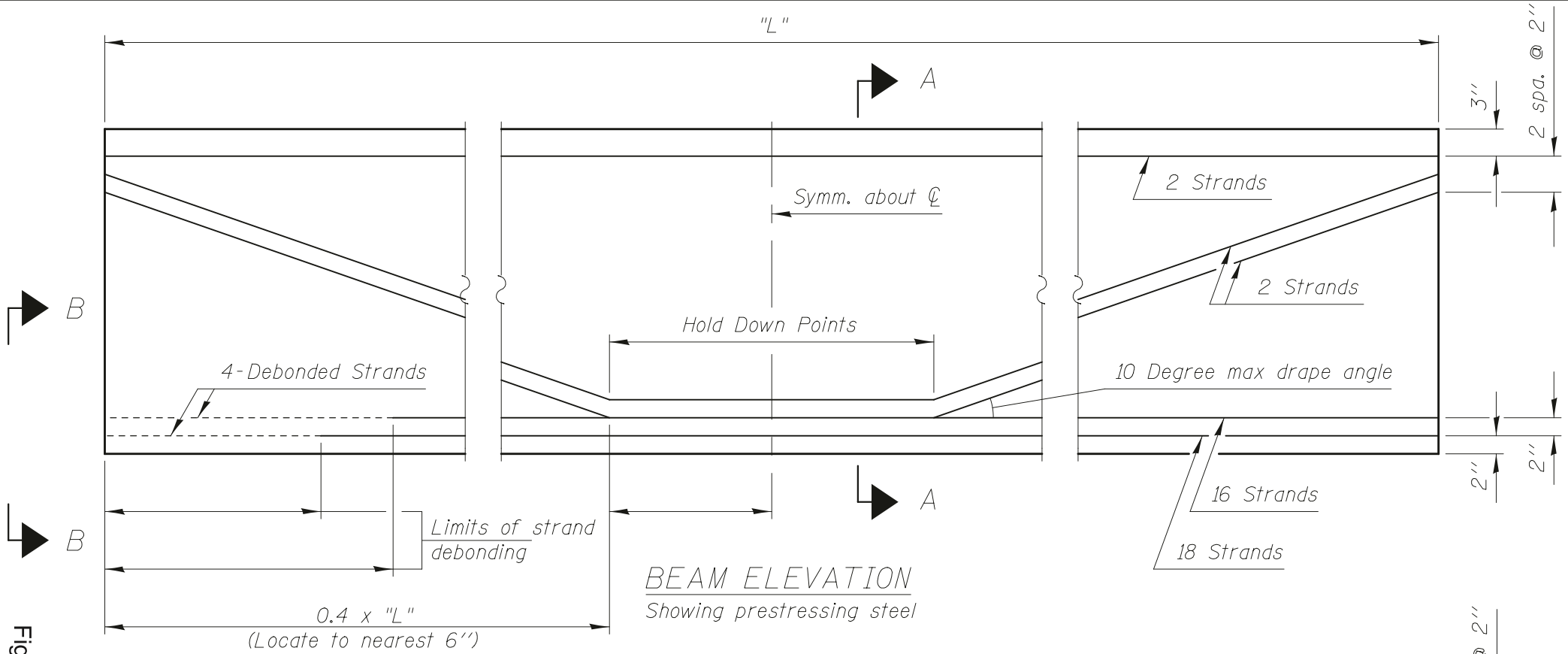

Note:

The designer shall not debond the outer most or inner most strands in a row, nor two adjacent strands.

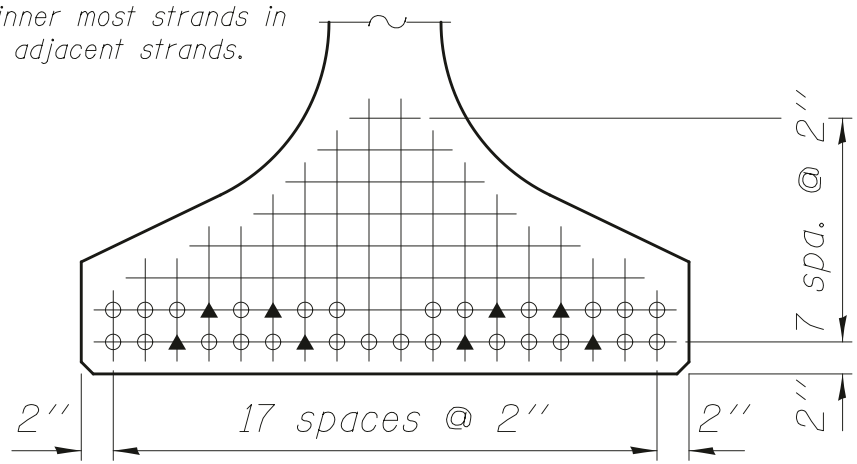

VIEW B-B

○ Fully bonded strands

▲ Partially debonded strands

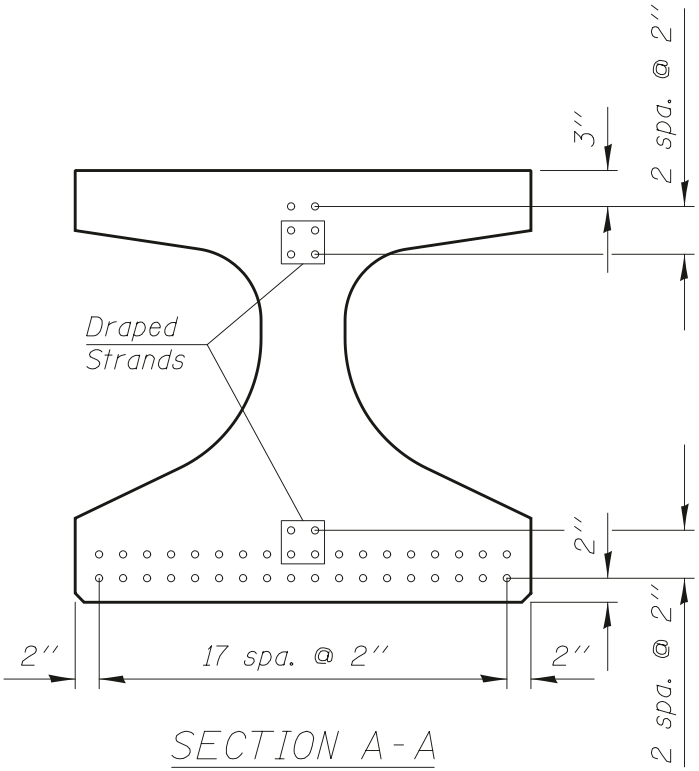

SECTION A-A

Figure 3

TYPICAL LAYOUT OF PRESTRESSING STRANDS FOR IL-BEAMS

South Dakota Department of Transportation (SDDOT)

36-30-36

STATE OF SOUTH DAKOTA	PROJECT	Sheet No.	Total Sheets
	BRO 8026(00)01	31	40

FOR BIDDING PURPOSES ONLY

ESTIMATED QUANTITIES

ITEM	QUANTITY	UNIT
45" Minnesota Shape Prestressed Concrete Beam	370	Ft

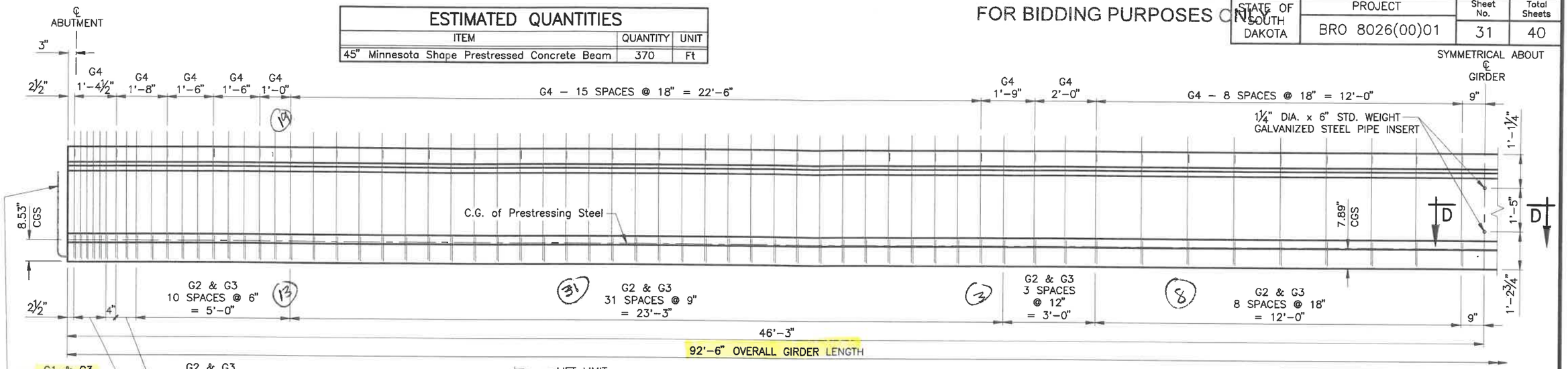

ELEVATION

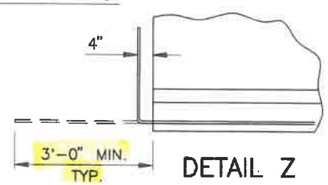

DETAIL Z

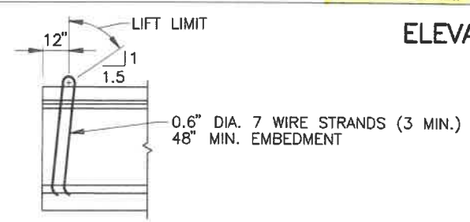

TYPICAL LIFTING DEVICE

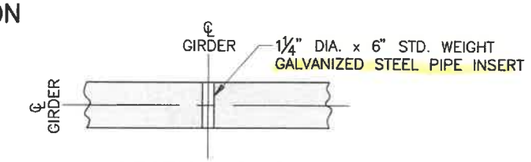

SECTION D–D

REINFORCING SCHEDULE
(FOR ONE GIRDER)

MK.	NO.	SIZE	LENGTH	TYPE
A1	8	#8	48'-2"	STR
G1	12	#5	8'-5"	S11
G2	110	#4	8'-5"	S11
G3	122	#4	4'-10"	S3A
G4	62	#4	2'-8"	17

✓ 12 ✓ 110 ✓ 244 ✓ 122

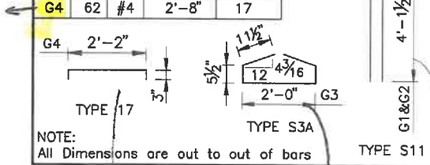

NOTE:
All Dimensions are out to out of bars

2.67 3'-4" 8'-6"

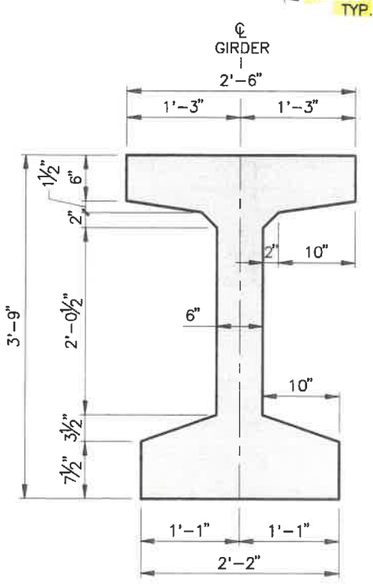

TYPE 45M GIRDER

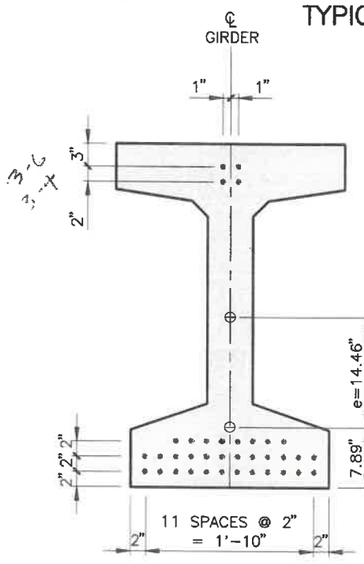

℄ SECTION

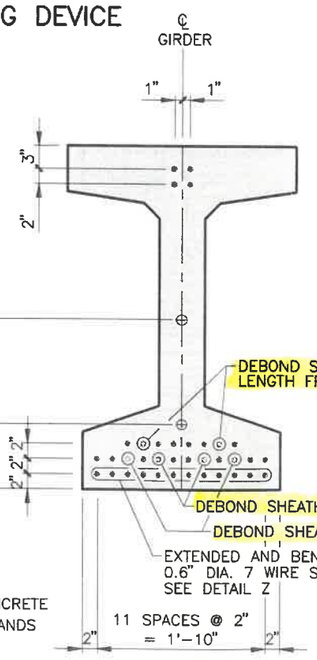

END VIEW

CGC = CENTER OF GRAVITY OF CONCRETE
CGS = CENTER OF GRAVITY OF STRANDS

92'-6" GIRDER
(36 – 0.6" DIA. TYPE 270K LOW LAX STRANDS)

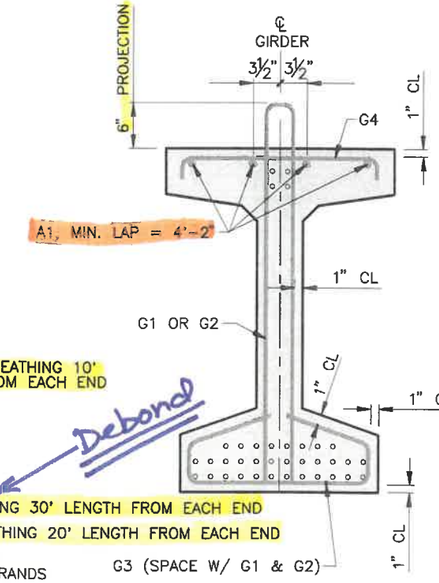

STIRRUP DETAILS

REGISTERED PROFESSIONAL ENGINEER REG. NO. 9235 MARK MUNKER SOUTH DAKOTA 7/7/17

GIRDER DETAILS FOR 94'-0" Prestressed Concrete Girder Bridge

0° Skew
North Fork Whetstone
Str. No. 26-310-031
Begin Sta. 4+52.97 End Sta. 5+46.97

Sec. 17/18 T121N R47W
BRO 8026(00)01
PCN 00ZF
HL-93

S.D. DEPT. OF TRANSPORTATION
GRANT COUNTY

PLANS BY:
Aason Engineering Company. Inc.
Watertown, South Dakota

Drawn:	MRJ	Date:	1/2017	File No:	Sheet No.
Checked:	RSD	Date:	1/2017	2016 -035	11
Approved:	MRJ	Date:	1/2017		of 17
Designer:	MRJ	Date:	1/2017		

PILE DRIVING

A driveability analysis was performed using the wave equation analysis program (GRLWEAP). A list of acceptable hammers is provided below. The hammers listed were found to produce acceptable driving stresses. Pile hammers not listed will require evaluation and approval prior to use from the Geotechnical Engineering Activity.

Delmag D19-32 Delmag D19-42 MVE M-19 APE D19-42

The Contractor shall notify the Geotechnical Engineering Activity two weeks prior to pile driving operations.

If during pile driving operations design bearing is obtained above elevation 1015 feet, the Geotechnical Engineering Activity shall be contacted prior to driving any additional piling.

If design bearing is not obtained during pile driving operations the contractor shall perform a delayed bearing test. If bearing is still not obtained, the Geotechnical Engineering Activity shall be contacted prior to driving any piling below elevation 990 feet.

ABUTMENT BACKWALL COATING

The material for waterproofing the abutment backwall shall be one of the products from the approved products list. The acceptable abutment backwall coating suppliers are listed on the approved products list at the following Internet address:

http://apps.sd.gov/applications/HC60ApprovedProducts/ProductList.aspx

The cost of furnishing and applying the coating shall be incidental to the contract unit price per cubic yard for Class A45 Concrete, Bridge. See Abutment Details Sheets.

SUPERSTRUCTURE

1. Girder lifting hooks shall be cut off before placement of concrete deck slab.
2. The deck-finishing machine shall be adjusted and operated in such a manner that the roller screed or screeds are parallel with the centerline of the bridge and the finish machine is parallel to the skew of the bridge. Concrete placement in front of the finish machine shall be kept parallel to the machine.
3. The bridge deck must be placed and finished continuously at a minimum rate of **50** ft. of deck per hour measured along Centerline Roadway. If concrete cannot be placed and finished at this rate, the Engineer shall order a header installed and operations stopped. Notify the Bridge Construction Engineer if deck pour operations are stopped. Operations may resume only when the Engineer is satisfied that a rate of **50 ft.** of deck per hour can be achieved and the concrete in the previous pour has attained a minimum compressive strength of 2000 psi.
4. Pipe Sleeve Bases shall be installed as shown in the plans.
5. See Special Provision for Concrete Penetrating Sealer.

PRESTRESSED GIRDERS

1. Minimum concrete compressive strength f'c = **8,000** psi at 28 days for all girders and f'ci = **7,000** psi for all girders.
2. All mild reinforcing steel shall be deformed bars conforming to ASTM A615, Grade 60.
3. Individual tendons in all pretensioned sections shall consist of seven wire uncoated Type 270K Strands having a nominal diameter of 0.6" and a minimum ultimate strength of 58,600 lbs. per cable. An initial tensile force of 43,500 lbs. shall be applied to all 0.6" cables in all girders. All prestressing steel shall conform to AASHTO M203. (low lax strands).
4. Debond sheathing shall consist of high density polyethylene or polyprophylene with a minimum thickness of 0.025". Inside diameter of sheathing shall permit free movement of strand, but no larger than the diameter of the strand plus 1/8". If using slit sheathing, two sheathing layers shall be used with the slits located on opposite sides of the strands. Seal all all joints and ends with tape. Debonding grease shall not be used.
5. Detension fully bonded strands first. Detension sheathed strands after all fully bonded strands have been detensioned. Detension strands with shortest length of sheathing first and end with longest length of sheathing.
6. Within 24 hrs of detensioning, seal all openings between the strands and sheathing with an approved epoxy or silicone sealant.
7. All prestressed girders within a span shall be cast within an 8 day period. If not, the newest girder shall be at least 6 weeks old before the deck slab is poured. The girders shall be poured in all steel forms.
8. Prestressed concrete girders shall always be lifted by the devices provided in the top flanges near the ends of the girders. Types of lifting devices other than those shown on the plans may be used provided they are approved by the Office of Bridge Design. The design of the lifting devices shall be the responsibility of the Fabricator.
9. Each beam shall be marked showing structure number, casting date, and beam number. Marking shall be on the face of the beam near the end and so located that they will be exposed after the diaphragms have been cast. Facia beams shall be marked on an inside face. All markings shall be stenciled and clearly legible. For beam designations and locations, see superstructure layout plan and Erection Data sheet.
10. The physical properties of the elastomeric bearing pads shall conform to the requirements of Section 18.2 of the AASHTO LFRD Bridge Construction Specification and the AASHTO Materials Specification M251. The elastomeric bearing pads shall conform to Grade 70 (durometer). The cost of the pads shall be incidental to the contract unit price per cubic yard for Class A45 Concrete, Bridge. Certification that pads are 70 durometer and meet the requirements of AASHTO LFRD Bridge Construction Specification Section 18.2 and AASHTO Materials Specification M251 shall be furnished to the Engineer with the shop drawings. No laminated bearing pads will be allowed.

PRESTRESSED GIRDERS (CONTINUED)

11. All exposed corners shall be chamfered 3/4" or rounded to 3/4" radius.
12. Dead Load of girder taken as effective at transfer. Cut strands, except those extended and bent, flush with end of girder and coat end of strands with mortar.
13. The Contractor shall be responsible for ensuring that transportation stresses, handling and erection do not cause damage to the girders.
14. Furnish and install inserts for steel diaphragms, see Girder Details Sheet.
15. For informational purposes only, the approximate weight of each girder is 650 pounds per foot = 60,200 pounds.

Sheathing!

Note!

64,000 lbs
Length 92'-6"

REGISTERED PROFESSIONAL ENGINEER
REG. NO. 9235
MARK MUNKER
SOUTH DAKOTA
7/7/17

Kansas Department of Transportation (KDOT)

STATE	PROJECT NO.	YEAR	SHEET NO.	TOTAL SHEETS
KANSAS	235-87 KA-3110-01	2018	294	1062

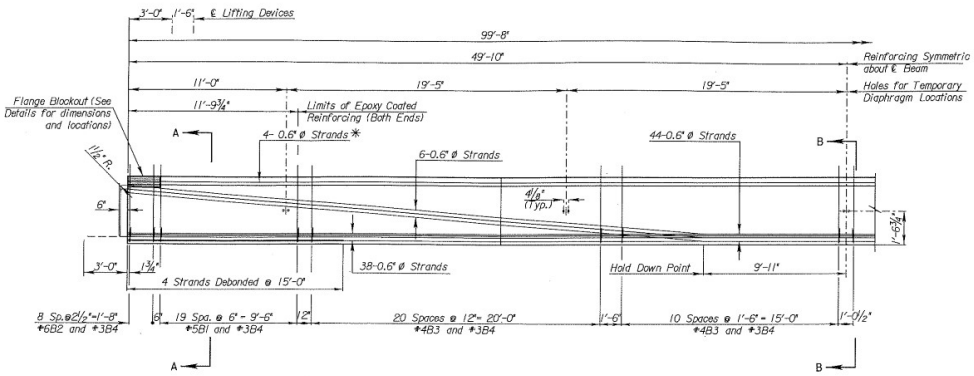

TYPICAL ELEVATION NU 35+2 BEAM
(Span 8)

NOTE: Extend 10 strands 3'-0" beyond the end of the beam. Strands not shown shall be cut flush with the end of the beam. See "Strand Extension Details".

NOTE: During transportation and construction only, support beams on bearing points a maximum of 2'-0" from the beam end. The Fabricator shall show the proposed support locations on the shop drawings.

NOTE: The hold down force at the harp points for 6 strands at 3.96 kips per strand = 23.75 kips total.

* 4 Strands at top are to be tensioned to 2.02 kips/strand.

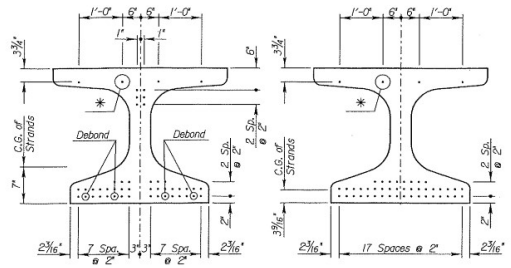

SECTION A-A

SECTION B-B

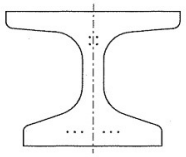

STRAND EXTENSION DETAIL
(All Spans)

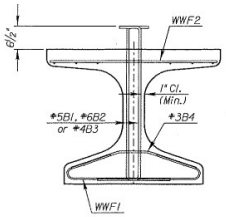

TYPICAL REINFORCING
(All Spans)

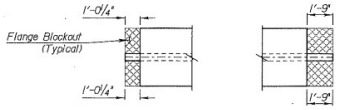

Pier 1 Abutment 2

FLANGE BLOCKOUT DETAILS

BILL OF REINFORCING STEEL							
99'-8" Beam (1 Listed-11 Req'd.)							
Straight Bars				Bent Bars (Plain)			
Mark	No.	Size	Length	Mark	No.	Size	Length
				B3	128	#4	5'-0⅞"
				B4	64	#3	3'-0⅜"
99'-8" Beam (1 Listed-11 Req'd.)							
Straight Bars				Bent Bars (Epoxy Coated)			
Mark	No.	Size	Length	Mark	No.	Size	Length
				B1	80	#5	5'-0⅞"
				B2	36	#6	5'-0⅞"
				B4	58	#3	3'-0⅜"

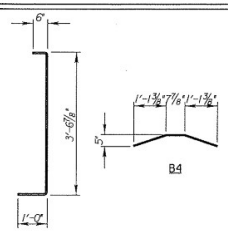

BENDING DIAGRAMS
All dimensions are out to out of bars

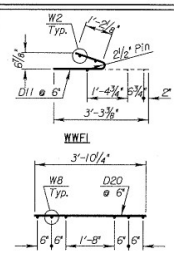

WELDED WIRE BENDING DIAGRAMS

BILL OF MATERIAL		
Item	Unit	Quantity
Prestressed Concrete Beams (NU 35+2)	Lin.Ft.	1096.4
The following quantities are given for information only and shall not be paid for directly but shall be made subsidiary to the bid item "Prestressed Concrete Beams". All Quantities below are per Beam.		
Beam Concrete (f'c=10,000 psi, f'ci=7500 psi)	Cu.Yds.	19.0
Approx. Wt. per Beam	Tons	38.6
0.6" Ø Prestressing Strand (270 KSI Low Relaxation fy= 243 KSI)	Lin.Ft.	4844
Reinforcing Steel (fy=60 ksi)	Lbs.	507
Reinforcing Steel (Epoxy Coated) (fy=60 ksi)	Lbs.	764
Welded Wire Fabric (f y=60 ksi)	Lbs.	929
Welded Wire Fabric (Epoxy Coated) (fy=60 ksi)	Lbs.	286
1" Formed Holes	Each	-
Lifting Devices	Each	4
Elastomeric Bearing Pads (¾"x12"x3'-0")	Each	2
Bearing Plates (½" x 15" x 3'-1")	Each	2

NO.	DATE	REVISIONS	BY	APP'D
1				

KANSAS DEPARTMENT OF TRANSPORTATION
Br. No. 235-87-15.03 (842) STA. 419+95.29
NU 35+2 BEAM DETAILS
SPAN #8
S. Bd. I-235 OVER LITTLE ARK. RIVER & ARKANSAS AVE.
PROJECT NO. 235-87 KA-3110-01 SEDGWICK COUNTY

SHEET NO. OF	SCALE	APP'D	
DESIGNED	DETAILED	QUANTITIES	CADD
DESIGN CK.	DETAIL CK.	QUAN. CK.	CADD CK.

KDOT Graphics Certified 07-16-2018

KDOT Graphics Certified

Plotted By: Kelly.Farlow Plot Location:
File: c:\Ums\pwe\01-02\kelly.farlow\dms02530\ka3110\bdr0842-024.dgn
Plot Date: 7/16/2018

South Carolina Department of Transportation (SCDOT)

TypeIV.dgn

BRIDGE PLANS ID	SHEET NO.
XXXXXXX-BXX	XX

Design Beams using strands in the table below.

STRAND DATA

DIAMETER	AREA (in²)	TENSIONING LOAD	DIAMETER	AREA (in²)	TENSIONING LOAD
1/2"	0.153	31.0 kips	3/8"	0.192	38.9 kips
1/2" Special	0.167	33.8 kips	0.6"	0.217	43.9 kips

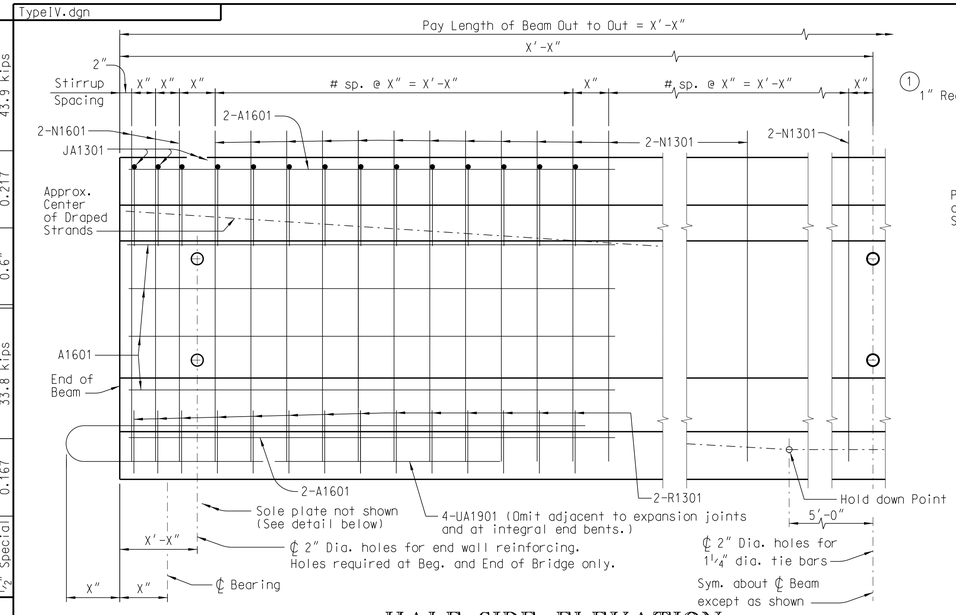

HALF SIDE ELEVATION

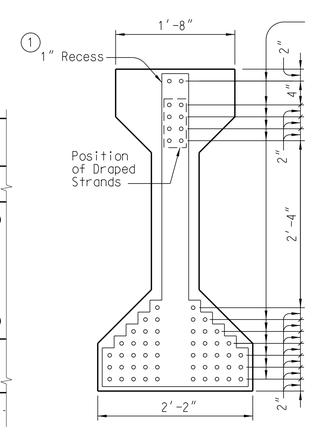

END ELEV.

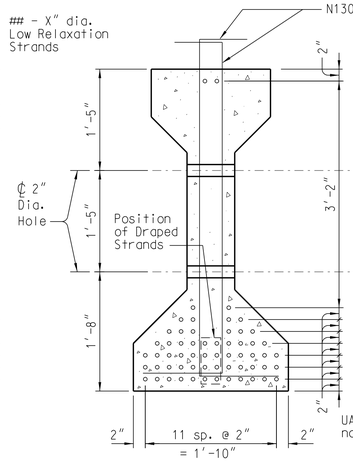

AT CENTER OF BEAM

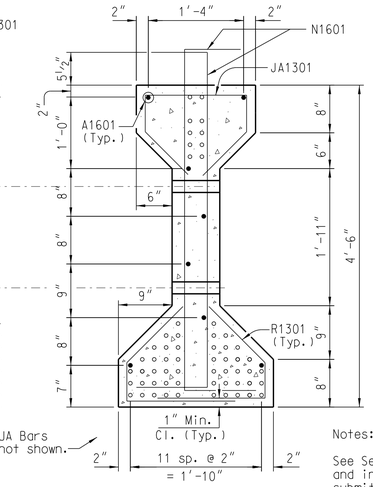

AT END OF BEAM

SECTIONS THRU BEAM

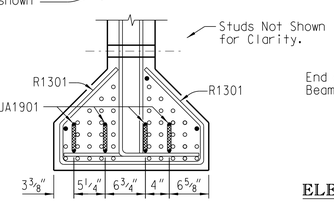

END VIEW

Showing UA1901 bars

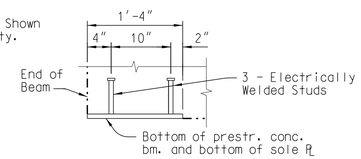

ELEV. AT SIDE OF BEAM

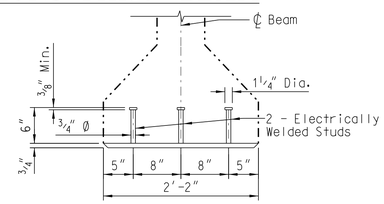

ELEV. AT END OF BEAM

SOLE PLATE DETAIL

Note to Designer:

This drawing is furnished for information only. All dimensions shown are sheet specific. Any use of this design and drawing, including dimensions, must be checked by the User's Engineer to ensure design is adequate for the intended use. All drawings must be signed and sealed by a South Carolina Registered Professional Engineer when used.

Note to Designer:

If plans are detailed with Steel Intermediate Diaphragms, revise beam details for consistency.

Note to Designer:

Investigate "UA" bar embedment lengths with respect to termination of debonded strands.

BEAM CAMBER AND DEFLECTION

BEAM CAMBER		DEFLECTION DUE TO			
AT RELEASE	* AT ERECTION	INTERIOR DIAPHRAGM	STAY-IN-PLACE FORMS **	SLAB	BARRIER PARAPET
X"	X"	X"	X"	X"	X"

* Based on a beam age of 60 days at the time of erection

** Deflection due to the weight of the metal forms and the weight of the concrete in the valleys of the forms.

"+" indicates upward movement
"-" indicates downward movement

DESIGN DATA

Low Relaxation Strands

Tensile Strength (fpu) = 270 ksi
Initial Prestress (0.75 fpu) = 202.5 ksi

Class XXXX Concrete

f'c = X ksi
f'ci = X ksi

TOLERANCES

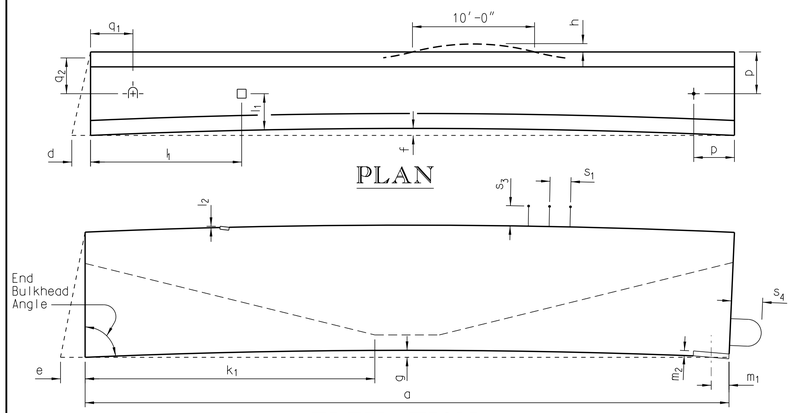

PLAN

ELEVATION

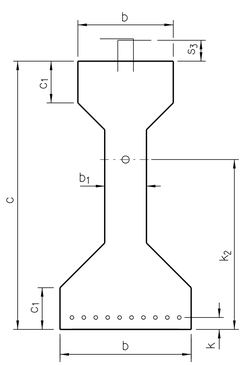

CROSS SECTION

a	Length	± ¼" per 25' length, ± 1" max.
b	Width (overall)	+ ⅜", - ¼"
b_1	Web Width	+ ⅜", - ¼"
c	Depth (overall)	+ ½", - ¼"
c_1	Flange Depth	± ¼"
d	Variation from Specified Plan End Squareness or Skew	± ⅛" per 12" width, ± ½" max.
e	Variation from Specified Elevation End Squareness or Skew	± 3/16" per 12" depth, ± 1" max.
f	Sweep	⅛" per 10' length
g	Camber Variation from Design Camber (measurement of camber for comparison to predicted design values should be completed within 72 hrs. of transfer of prestr. force)	± ⅛" per 10' ± ½" max. up to 80' length ± 1" max. for length greater than 80'
h	Local Smoothness of Any Surface	¼" in 10'
k	Location of Strand (Individual)	± ¼"
	Location of Strand (Bundled)	± ½"
k_1	Location of Harp Points for Harped Strands from Design Location	± 20"
k_2	Location of Post-Tensioning Duct	± ¼"
l_1	Location of Embedment	± 1"
l_2	Tipping and Flushness of Embedment	± ¼"
m_1	Location of Bearing Assembly	± ⅝"
m_2	Tipping and Flushness of Bearing Assembly	± ⅛"
p	Location of Inserts, Sleeves, or Holes for Structural Connections	± ½"
q_1	Location of Handling Device Parallel to Length of Member	± 6"
q_2	Location of Handling Device Transverse to Length of Member	± 1"
s_1	Longitudinal Spacing of Stirrups	± 2"
s_2	Longitudinal Spacing of Stirrups within Distance "c" from Member Ends	± 1"
s_3	Stirrup Projection from Beam Surface	+ ¼", - ½"
s_4	Reinforcing Bar Projection from Beam End	± ½"

For Information Only - Paid for as Prestressed Beam

REINF. STEEL SCHED.

MARK	NO. REQ'D	DIMENSION "a"	"b"	"c"	"d"	LENGTH
A1601	16	6'-9"	—	—	—	6'-9"
JA1301	X	1'-4"	6½"	11"	7¾"	4'-3"
N1301	X	8"	4'-9"	1'-2"	—	6'-7"
N1601	X	10"	4'-9"	1'-2"	—	6'-9"
R1301	X	1'-6"	6½"	1'-3½"	11"	3'-4"
UA1901	8	8'-6"	6"	7'-0"	—	15'-9"

QUANTITIES

ITEM	UNIT	ONE BEAM
Concrete, Class XXXX	CY	XXXX
Reinforcing Steel	LB	XXXX
Prestressing Strands	LF	XXXX
Structural Steel	LB	As Necessary

Notes:

See Section 704 of the Standard Specifications for additional requirements and information regarding prestressed concrete beams. Shop drawings must be submitted in accordance with the Standard Specifications.

All overhang brackets in the top flange of exterior beams shall be galvanized in accordance with AASHTO M 111, AASHTO M 232, or ASTM F 2329 as appropriate and shall be detailed accordingly in the shop plans.

Use prestressing strands that conform to the latest AASHTO M 203 for grade 270 (low relaxation).

The tensioning load in all X" Dia. low relaxation strands is XX.X kips. Do not release the strands until the compressive strength of the concrete has reached the value shown for f'ci.

On the top surface of beams where cast-in-place concrete will be placed, provide a finish that is clean, free of laitance, and intentionally roughened to a full amplitude of approximately ¼". Finish top of beam level.

Always maintain prestressed concrete beams in an upright position. Use lifting devices provided at each end of the beam to lift or handle beams. Do not permit beams to be placed or stored on interior supports causing negative moments.

Locate holes for tie bars as shown on this drawing. Form holes with 2" inside dia. pipe and prevent movement during casting by securely fastening the pipe.

1 Provide a 1" recess in the end of the beam, only at beam ends that are adjacent to expansion joints. Cut all strands ½" back into recess and fill the recess with an epoxy mortar especially formulated for applications on vertical surfaces.

Debonding:

1) For all debonding material, use tubular conduit capable of resisting the pressure exerted by the concrete. When using slit conduit, use two conduits with the slits located on opposite sides of the strand. Use conduit made of high density polyethylene or polyprophylene with a minimum thickness of 0.025". Use conduit with an inside diameter that will permit free movement of the encased strand, but no larger than the diameter of the strand plus ⅛". Place conduit on the strand at the location(s) shown on the plans (± 1") to prevent bonding of the concrete. Secure conduit to prevent any longitudinal movement along the strand. Prevent concrete from entering the conduit by sealing with tape. Use tape manufactured from a non-corrosive material that is compatible with the concrete, conduit, and steel.

2) Release strands in accordance with Section 704 of the Standard Specifications with the following exceptions:
a) Release fully bonded strands first.
b) Release sheathed strands after all fully bonded strands have been released. Release the sheathed strands in sequence starting with those strands having the minimum length of sheathing and progressing based on increasing length of sheathing until the strands with the maximum length of sheathing have been released.

3) Within 48 hours of detensioning, seal the openings between the strands and the sheathing . Use an approved sealant that is made of either epoxy or silicone. If silicone sealant is provided, use a low modulus silicone sealant that is white in color.

	BY	CHK.	DATE
REV.			
REV.	GAR	LEM	5-15
	Overhang Insert		
REV.	JXY	SAN	3-14
	Tolerance		
REVIEWED			
QUAN.			
DR.	PNP	SAN	3-08
DES.			

SOUTH CAROLINA
DEPARTMENT OF TRANSPORTATION

PRESTR. CONC. BEAM DETAILS AASHTO TYPE IV

COUNTY	ROUTE
XXXXXXXX	XXXXXX

DRAWING NO. 704-10

Printed: Tuesday, May 05, 2015 9:00:18 AM

Wisconsin Department of Transportation (WisDOT)

SHEET INDEX

SHEET NO.	TITLE	REVISION #
1A	GIRDER SCHEDULE AND TABLE OF CONTENTS	4
1B	PROJECT BILL OF MATERIALS AND REBAR SCHEDULE	4
2A	45W PRESTRESSED GIRDER DETAILS - SPAN 1	4
2B	45W PRESTRESSED GIRDER DETAILS - SPAN 2	4
2B	ANCHOR PLATE DETAILS - SPAN 2 EAST ABUT. END	4
3A	FRAMING PLAN	4
4A	SLEEVE SPACING - GIRDERS 1-16 (SPAN 1)	4
4B	SLEEVE SPACING - GIRDERS 17-32 (SPAN 2)	4
4C	HANGER SPACING	4
4D	STATIC LINE BOLT SPACING & DETAILS	4
5A	STRAND & LINE DETAILS - SPAN 1	4
5B	STRAND & LINE DETAILS - SPAN 2	4

STATE PROJECT #1060-33-77
STRUCTURE B-40-769
45W PRESTRESSED GIRDER

GIRDER SCHEDULE

GIRDER NUMBER	SPAN	QTY.	GIRDER SIZE	NUMBER OF STRANDS	LENGTH	CUBIC YARDS PER GIRDER	APPROX. CALCULATED WEIGHT PER GIRDER
1,16	1	2	45W	38	107'-7 1/2"	19.16	83,948 LBS
2-15	1	14	45W	38	107'-7 1/2"	19.16	83,948 LBS
17-32	2	16	45W	28	94'-10 1/2"	16.88	74,003 LBS

NOTE: DEBONDED STRANDS GIRDERS 1 &16 AT PIER END ONLY

NOTE: BEARING PLATES AT EAST ABUT. ONLY

NOTE: NO SEALER ON EXTERIOR FASCIA AND BOTTOM

REVISION HISTORY

REVISION #	DESCRIPTION	DATE
1	SUBMITTED FOR APPROVAL	1-29-13
2	RESUBMITTED FOR APPROVAL	1-30-13
3	SUBMITTED FOR STATE APPROVAL	2-4-13
4	RESUBMITTED FOR STATE APPROVAL	2-5-13

Project: GREENFIELD AVE. OVER USH 45/IH 94

Title: COVER SHEET

COUNTY MATERIALS CORPORATION
1111 MENOMONIE STREET
EAU CLAIRE, WI 54703
PHONE: (715) 834-7701
FAX : (715) 834-5583

1104 E. L-T TOWNLINE ROAD
JANESVILLE, WI 53546
PHONE: (608) 373-9950

pci CERTIFIED PLANT

Batterman engineers surveyors planners

Drawn By: CM/JO/PG
Contractor: LUNDA
Scale Unless Noted: N/A
Sheet No.: 1A
County: MILWAUKE
City/Town: WEST ALLIS
Job Number: -

STATE PROJECT #1060-33-77
STRUCTURE B-40-769
45W PRESTRESSED GIRDER

Material - Total			
Item	Size	No. Per Girder	Total
INSERTS	7/8" Ø	4	16
SLEEVES	1 1/4" Ø	4	112
SLEEVES	1 1/2" Ø	1	32
BOLTS	3/4" x 12"	5	160
HANGERS	C-24 45° 4-APR	SEE DETAIL	100

Rebar Schedule - Totals							
Bar Mark	Grade	Size	No. Per Girder Span 1	No. Per Girder Span 2	Total	Length	
B49E	60	3	6	6	192	2'-3"	
B50	60	5	2	2	64	3'-7 1/2"	
B50E	60	3	116	116	3712	4'-3"	
B51	60	4	4	4	128	8'-2"	
B51E	60	4	4	4	128	2'-3"	
B52E	60	4	173	152	5200	9'-4 1/8"	7" PROJECTION ALL
B53	60	6	4	4	128	4'-4 1/2"	
B54	60	6	16	16	512	4'-11"	
B56	60	4	12	12	384	40'-0"	FULL LENGTH BAR
B56A	60	4	6		96	30'-7 1/2"	SHORT BAR
B56B	60	4		6	96	17'-10 1/2"	SHORT BAR
B57	60	4	149	136	4560	2'-7"	
B58	60	4	125	104	3664	2'-3 1/4"	

GIRDER NOTES

1. TOP OF GIRDER TO BE ROUGH FLOATEED AND BROOMED TRANSVERSELY FOR BONDING TO THE SLAB, EXCEPT THE OUTSIDE 8" OF GIRDER, WHICH SHALL RECIEVE A SMOOTH FINISH. AN APPROVED CONCRETE SEALER SHALL BE APPLIED TO ALL SMOOTH SURFACES INCLUDING THE OUTSIDE 8" OF THE TOP FLANGE.

2. THE GIRDERS SHALL BE PROVIDED WITH A SUITABLE LIFTING DEVICE FOR HANDLING AND ERECTING THE GIRDERS.

3. PRESTRESSING STRANDS SHALL BE 0.6" DIA. - 7 WIRE LOW RELAXATION STRANDS WITH AN ULTIMATE STRENGTH OF 270,000 PSI AND SHALL BE FLUSH WITH THE ENDS OF THE GIRDER, FOR GIRDER ENDS EMBEDDED COMPLETELY IN CONCRETE, ENDS OF STRANDS SHALL BE COATED WITH NON-BITUMINOUS JOINT SEALER, FOR GIRDER ENDS THAT ARE FULLY EXPOSED, COAT THE GIRDER ENDS, EXPOSED STRAND AND ALL NON-BONDING SURFACES WITHIN 2 FEET OF THE GIRDER ENDS WITH A NON-PIGMENTED EPOXY CONFORMING TO AASHTO M-235 TYPE III, CLASS B OR C. THE EPOXY SHALL BE APPLIED AT LEAST 3 DAYS AFTER MOIST CURING HAS CEASED AND PRIOR TO APPLICATION OF THE SEALER.

4. BEND EACH END OF THE #4 STIRRUPS 4-1/2."

REVISION HISTORY

REVISION #	DESCRIPTION	DATE
1	SUBMITTED FOR APPROVAL	1-29-13
2	RESUBMITTED FOR APPROVAL	1-30-13
3	SUBMITTED FOR STATE APPROVAL	2-4-13
4	RESUBMITTED FOR STATE APPROVAL	2-5-13

Project: GREENFIELD AVE. OVER USH 45/IH 94

Title: PROJECT BILL OF MATERIALS & REBAR SCHEDULE

COUNTY MATERIALS CORPORATION
1111 MENOMONIE STREET
EAU CLAIRE, WI 54703
PHONE: (715) 834-7701
FAX : (715) 834-5583

1104 E. L-T TOWNLINE ROAD
JANESVILLE, WI 53546
PHONE: (608) 373-9950

pci CERTIFIED PLANT

Drawn By: CM/JO/PG
Batterman engineers surveyors planners
Contractor: LUNDA
County: MILWAUKE
City/Town: WEST ALLIS
Scale Unless Noted: N/A
Job Number: -
Sheet No.: 1B

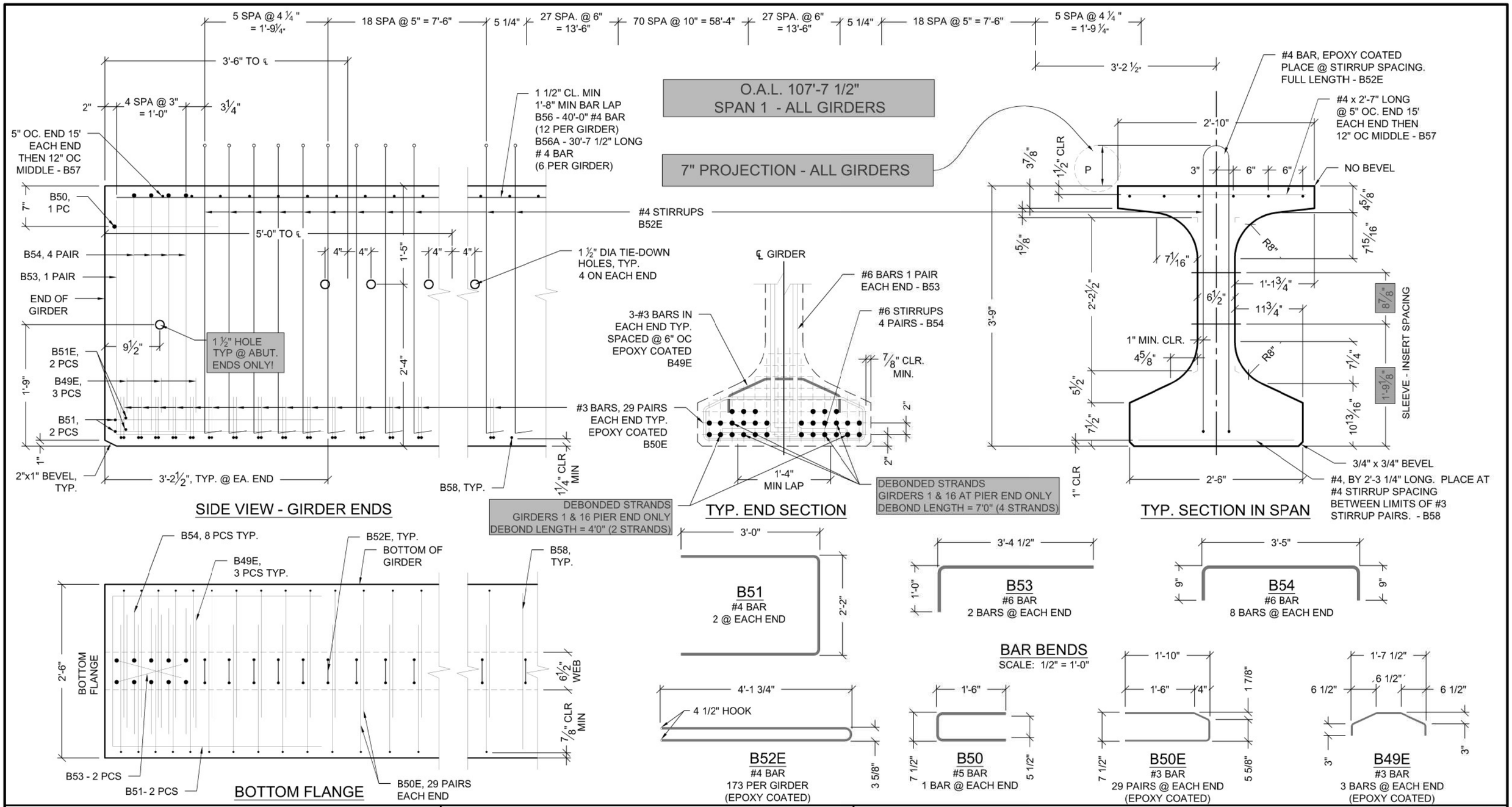

REVISION HISTORY

REVISION #	DESCRIPTION	DATE
1	SUBMITTED FOR APPROVAL	1-29-13
2	RESUBMITTED FOR APPROVAL	1-30-13
3	SUBMITTED FOR STATE APPROVAL	2-4-13
4	RESUBMITTED FOR STATE APPROVAL	2-5-13

Project: GREENFIELD AVE. OVER USH 45/IH 94

Title: 45W PRESTRESSED GIRDER DETAIL - SPAN 1

COUNTY MATERIALS CORPORATION
1111 MENOMONIE STREET
EAU CLAIRE, WI 54703
PHONE: (715) 834-7701
FAX : (715) 834-5583
1104 E. L-T TOWNLINE ROAD
JANESVILLE, WI 53546
PHONE: (608) 373-9950
pci CERTIFIED PLANT

Drawn By:	Contractor:		Scale Unless Noted:	Sheet No.:
CM/JO/PG	LUNDA		3/4" = 1'-0"	2A
Batterman engineers surveyors planners	County: MILWAUKE	City/Town: WEST ALLIS	Job Number: -	

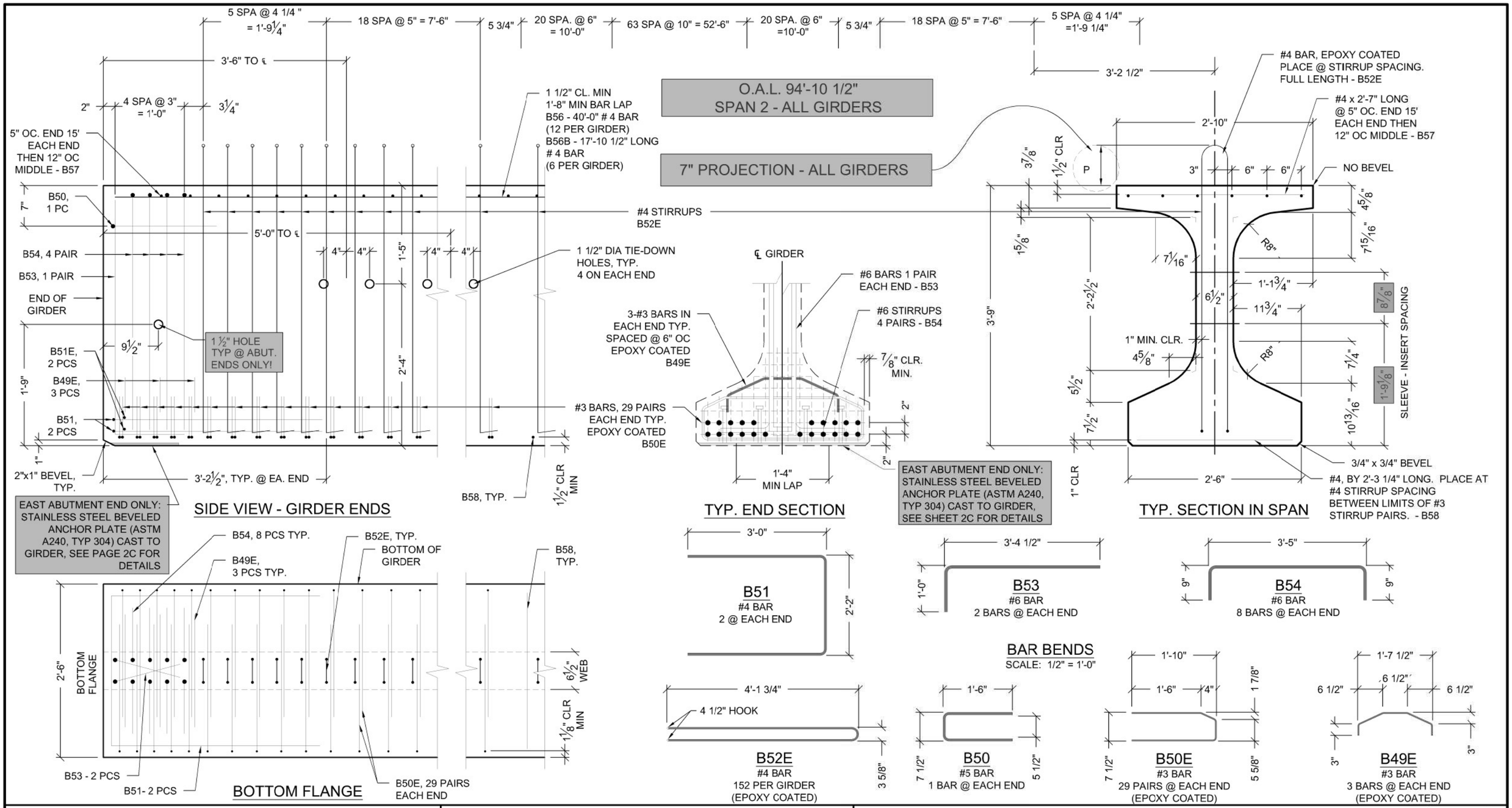

REVISION HISTORY

REVISION #	DESCRIPTION	DATE
1	SUBMITTED FOR APPROVAL	1-29-13
2	RESUBMITTED FOR APPROVAL	1-30-13
3	SUBMITTED FOR STATE APPROVAL	2-4-13
4	RESUBMITTED FOR STATE APPROVAL	2-5-13

Project: GREENFIELD AVE. OVER USH 45/IH 94

Title: 45W PRESTRESSED GIRDER DETAIL - SPAN 2

COUNTY MATERIALS CORPORATION
1111 MENOMONIE STREET
EAU CLAIRE, WI 54703
PHONE: (715) 834-7701
FAX : (715) 834-5583

1104 E. L-T TOWNLINE ROAD
JANESVILLE, WI 53546
PHONE: (608) 373-9950

pci CERTIFIED PLANT

Drawn By: CM/JO/PG
Batterman engineers surveyors planners

Contractor: LUNDA
County: MILWAUKE
City/Town: WEST ALLIS
Scale Unless Noted: 3/4" = 1'-0"
Job Number: -
Sheet No.: 2B

ANCHOR PLATE DETAIL FOR GIRDERS: 17-32 (AT E. ABUTMENT END ONLY)

BEARING NOTES:

ALL STRUCTURAL STEEL BEARING PLATES SHALL BE FLAT ROLLED WITH ALL SURFACES SMOOTH AND FREE FROM WARP AND ALL EDGES SMOOTH, STRAIGHT AND VERTICAL.

ALL PLATE CUTS SHALL BE MACHINE OR MACHINE FLAME CUTS.

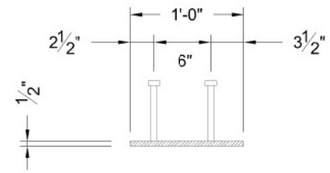

½" x 1'-2" x 2'-6" STAINLESS STEEL BEVELED ANCHOR PLATE (ASTM A240, TYPE 304) CAST TO GIRDER

BACK VIEW

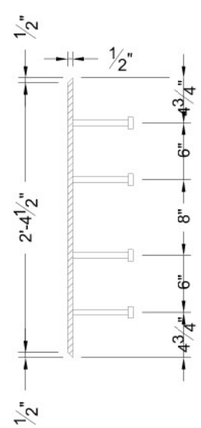

LEFT SIDE VIEW

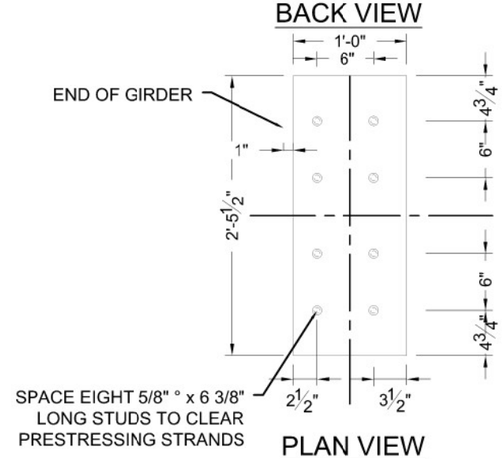

PLAN VIEW

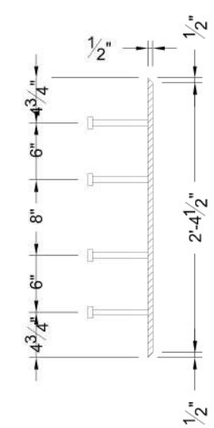

RIGHT SIDE VIEW

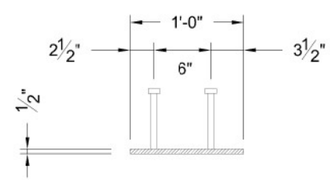

FRONT VIEW

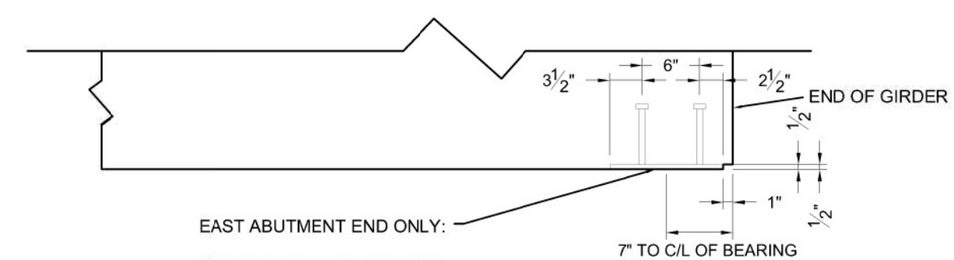

STAINLESS STEEL BEVELED ANCHOR PLATE (ASTM A240, TYP 304) CAST TO GIRDER WIDTH IS BOTTOM FLANGE MINUS 1/2"

REVISION HISTORY

REVISION #	DESCRIPTION	DATE
1	SUBMITTED FOR APPROVAL	1-29-13
2	RESUBMITTED FOR APPROVAL	1-30-13
3	SUBMITTED FOR STATE APPROVAL	2-4-13
4	RESUBMITTED FOR STATE APPROVAL	2-5-13

Project: GREENFIELD AVE. OVER USH 45/IH 94

Title: BEARING & ANCHOR PLATE DETAILS

COUNTY MATERIALS CORPORATION
1111 MENOMONIE STREET
EAU CLAIRE, WI 54703
PHONE: (715) 834-7701
FAX : (715) 834-5583

1104 E. L-T TOWNLINE ROAD
JANESVILLE, WI 53546
PHONE: (608) 373-9950

pci CERTIFIED PLANT

Drawn By:	Contractor:		Scale Unless Noted:	Sheet No.:
CM/JO/PG	LUNDA		N/A	2C
Batterman engineers surveyors planners	County: MILWAUKE	City/Town: WEST ALLIS	Job Number: -	

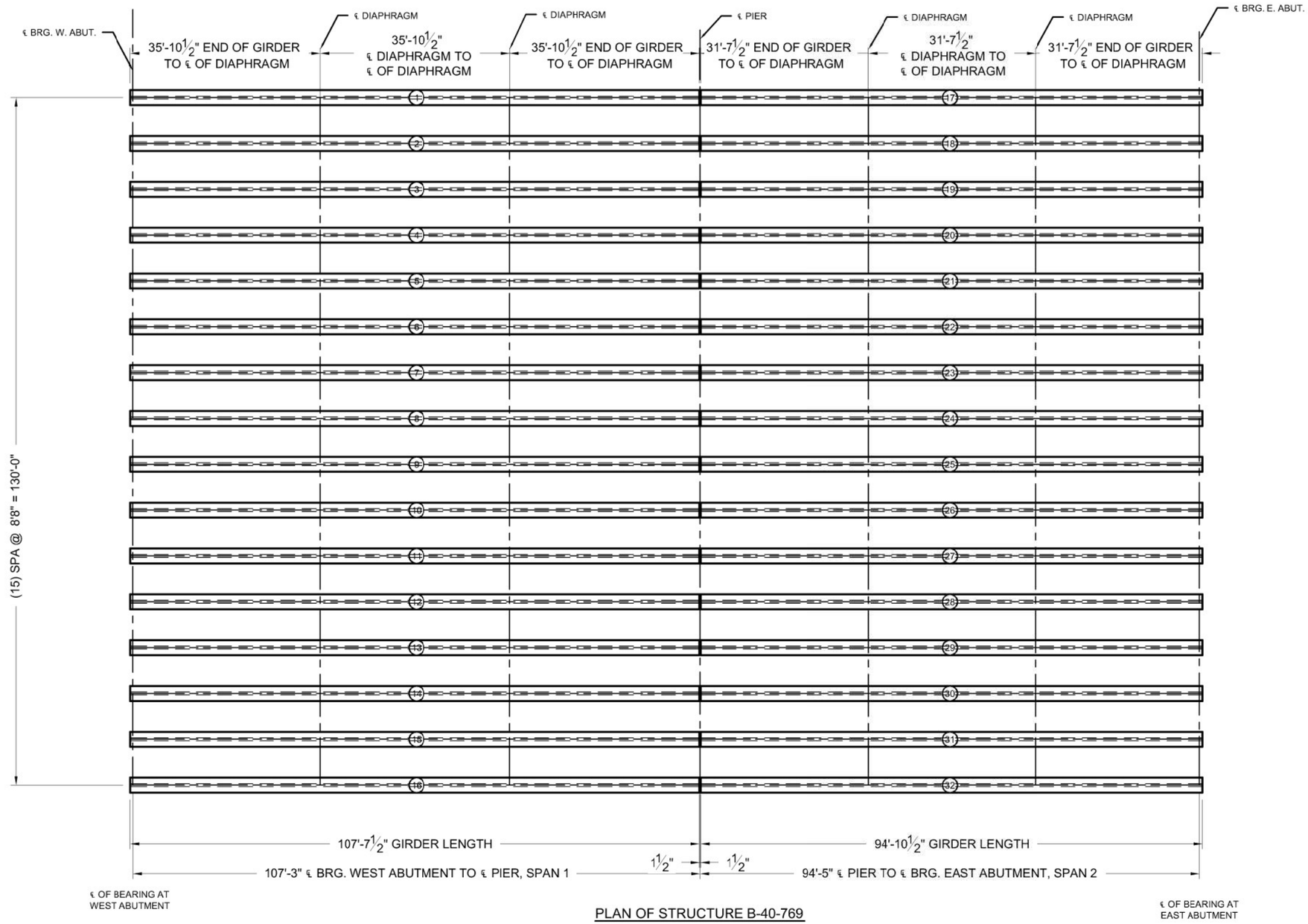

PLAN OF STRUCTURE B-40-769

REVISION HISTORY

REVISION #	DESCRIPTION	DATE
1	SUBMITTED FOR APPROVAL	1-29-13
2	RESUBMITTED FOR APPROVAL	1-30-13
3	SUBMITTED FOR STATE APPROVAL	2-4-13
4	RESUBMITTED FOR STATE APPROVAL	2-5-13

Project: GREENFIELD AVE. OVER USH 45/IH 94

Title: FRAMING PLAN

COUNTY MATERIALS CORPORATION
1111 MENOMONIE STREET
EAU CLAIRE, WI 54703
PHONE: (715) 834-7701
FAX : (715) 834-5583

1104 E. L-T TOWNLINE ROAD
JANESVILLE, WI 53546
PHONE: (608) 373-9950

pci CERTIFIED PLANT

Drawn By:	Contractor:		Scale Unless Noted:	Sheet No.:
CM/JO/PG	LUNDA		3/64" = 1'-0"	3A
Batterman engineers surveyors planners	County: MILWAUKE	City/Town: WEST ALLIS	Job Number: -	

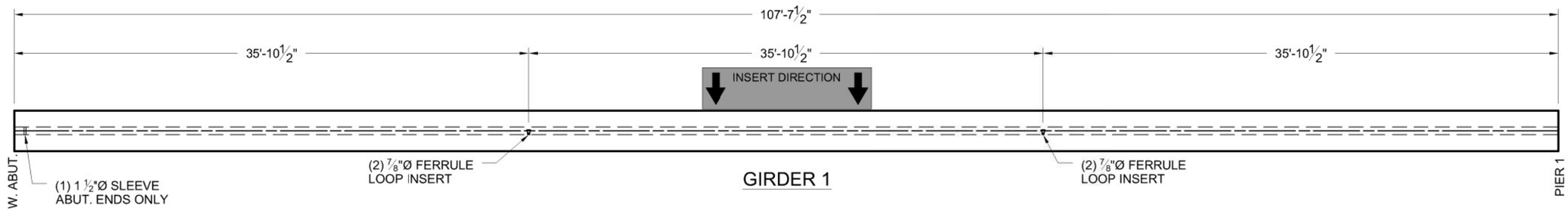

GIRDER 1

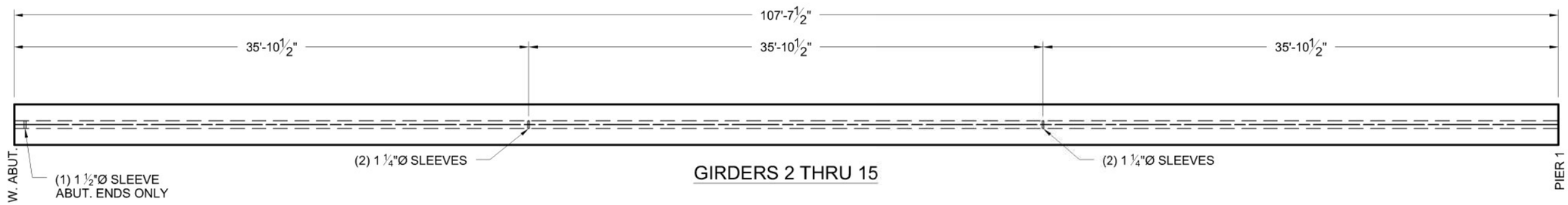

GIRDERS 2 THRU 15

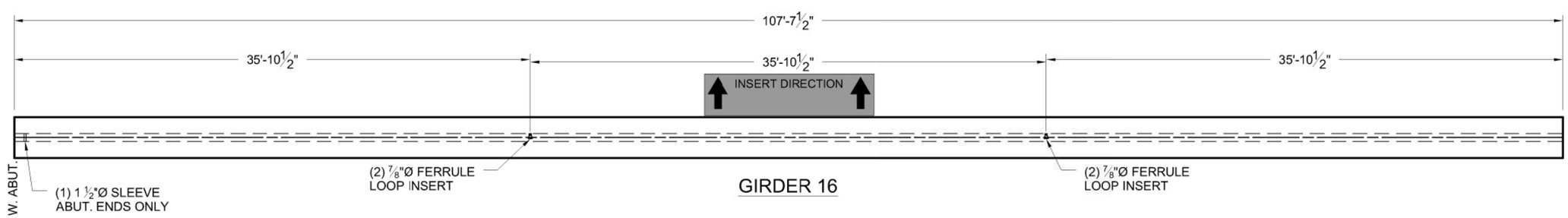

GIRDER 16

REVISION HISTORY

REVISION #	DESCRIPTION	DATE
1	SUBMITTED FOR APPROVAL	1-29-13
2	RESUBMITTED FOR APPROVAL	1-30-13
3	SUBMITTED FOR STATE APPROVAL	2-4-13
4	RESUBMITTED FOR STATE APPROVAL	2-5-13

Project: GREENFIELD AVE. OVER USH 45/IH 94

Title: SLEEVE DETAILS - GIRDERS 1-16 (SPAN 1)

COUNTY MATERIALS CORPORATION

1111 MENOMONIE STREET
EAU CLAIRE, WI 54703
PHONE: (715) 834-7701
FAX : (715) 834-5583

1104 E. L-T TOWNLINE ROAD
JANESVILLE, WI 53546
PHONE: (608) 373-9950

pci CERTIFIED PLANT

Drawn By: CM/JO/PG

Batterman engineers surveyors planners

Contractor: LUNDA

County: MILWAUKE

City/Town: WEST ALLIS

Scale Unless Noted: 1/8" = 1'-0"

Job Number: -

Sheet No.: 4A

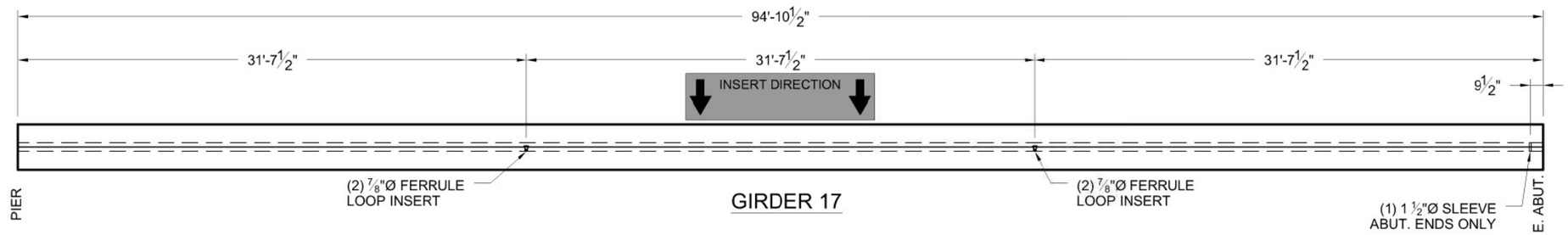

GIRDER 17

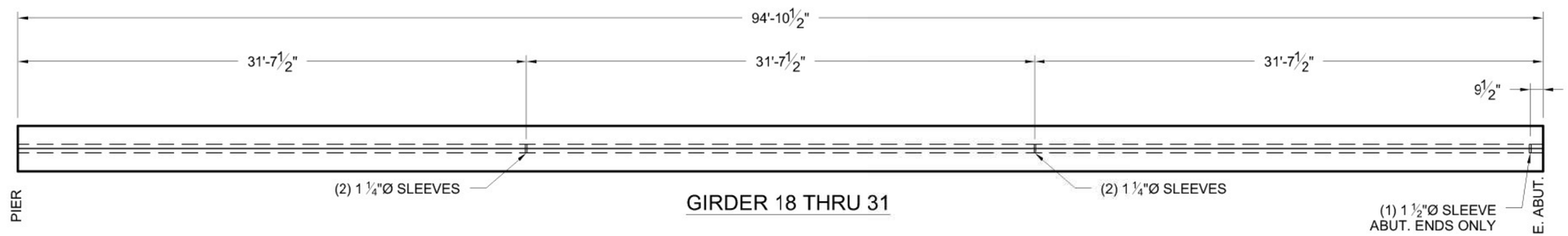

GIRDER 18 THRU 31

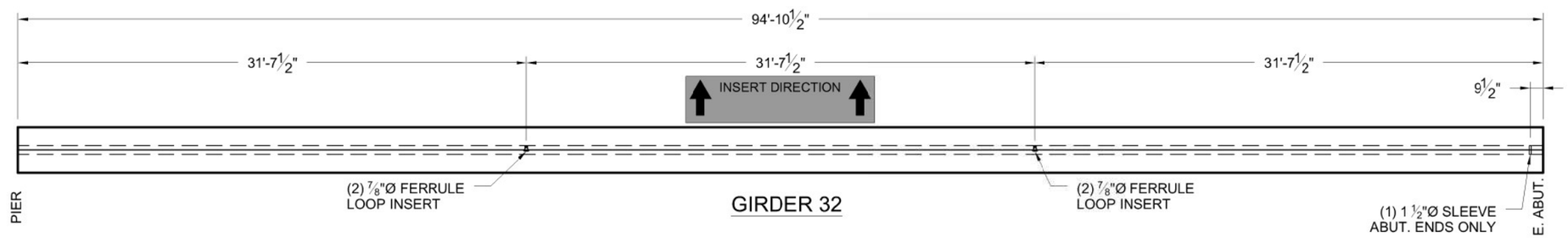

GIRDER 32

REVISION HISTORY

REVISION #	DESCRIPTION	DATE
1	SUBMITTED FOR APPROVAL	1-29-13
2	RESUBMITTED FOR APPROVAL	1-30-13
3	SUBMITTED FOR STATE APPROVAL	2-4-13
4	RESUBMITTED FOR STATE APPROVAL	2-5-13

Project: GREENFIELD AVE. OVER USH 45/IH 94

Title: SLEEVE DETAILS - GIRDERS 17-32 (SPAN 2)

COUNTY MATERIALS CORPORATION
1111 MENOMONIE STREET
EAU CLAIRE, WI 54703
PHONE: (715) 834-7701
FAX : (715) 834-5583
1104 E. L-T TOWNLINE ROAD
JANESVILLE, WI 53546
PHONE: (608) 373-9950
pci CERTIFIED PLANT

Drawn By:	Contractor:		Scale Unless Noted:	Sheet No.:
CM/JO/PG	LUNDA		1/8" = 1'=0"	4B
Batterman engineers surveyors planners	County: MILWAUKE	City/Town: WEST ALLIS	Job Number: -	

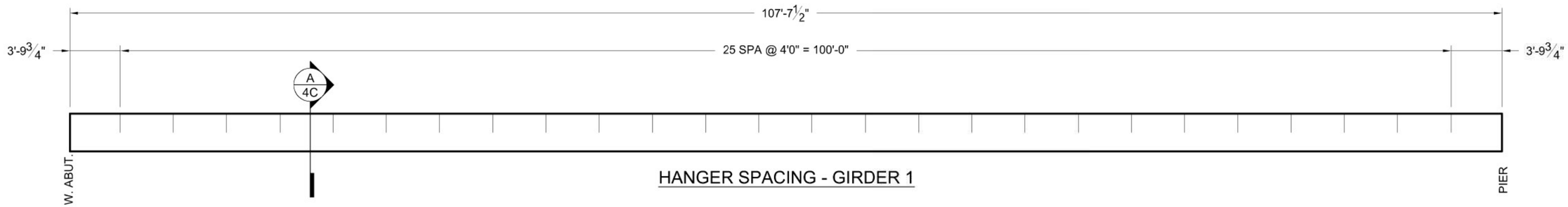

HANGER SPACING - GIRDER 1

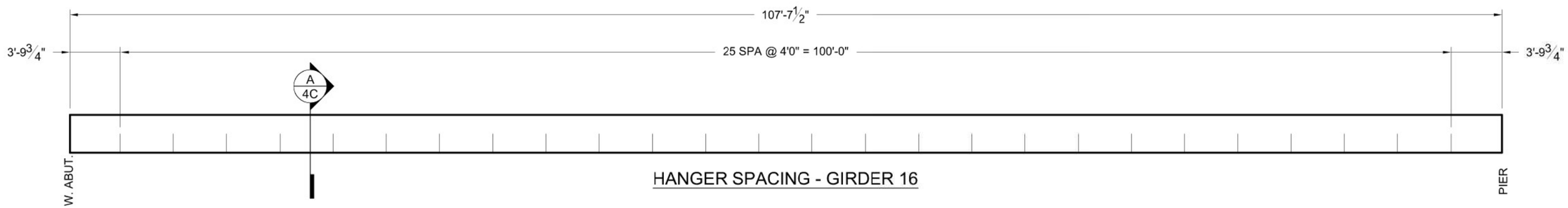

HANGER SPACING - GIRDER 16

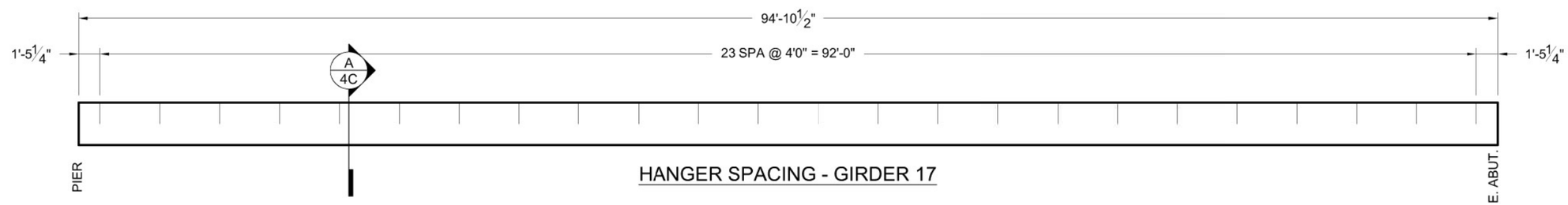

HANGER SPACING - GIRDER 17

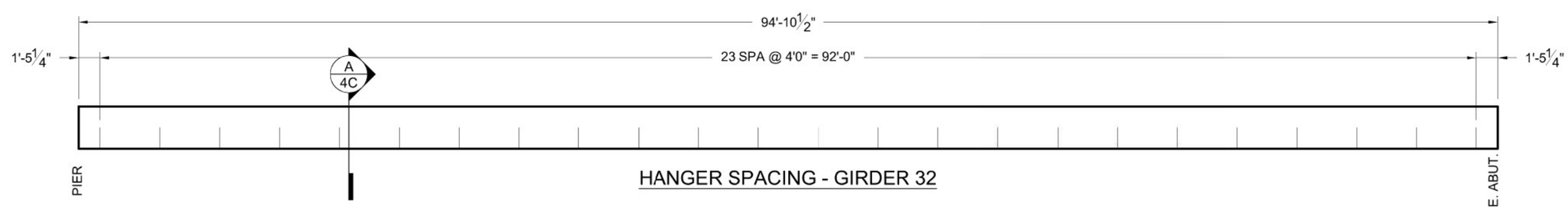

HANGER SPACING - GIRDER 32

REVISION HISTORY

REVISION #	DESCRIPTION	DATE
1	SUBMITTED FOR APPROVAL	1-29-13
2	RESUBMITTED FOR APPROVAL	1-30-13
3	SUBMITTED FOR STATE APPROVAL	2-4-13
4	RESUBMITTED FOR STATE APPROVAL	2-5-13

Project: GREENFIELD AVE. OVER USH 45/IH 94

Title: HANGER DETAILS

COUNTY MATERIALS CORPORATION
1111 MENOMONIE STREET
EAU CLAIRE, WI 54703
PHONE: (715) 834-7701
FAX : (715) 834-5583

1104 E. L-T TOWNLINE ROAD
JANESVILLE, WI 53546
PHONE: (608) 373-9950

pci CERTIFIED PLANT

Drawn By: CM/JO/PG

Batterman engineers surveyors planners

Contractor: LUNDA

County: MILWAUKE

City/Town: WEST ALLIS

Scale Unless Noted: 1/8" = 1'-0"

Job Number: -

Sheet No.: 4C

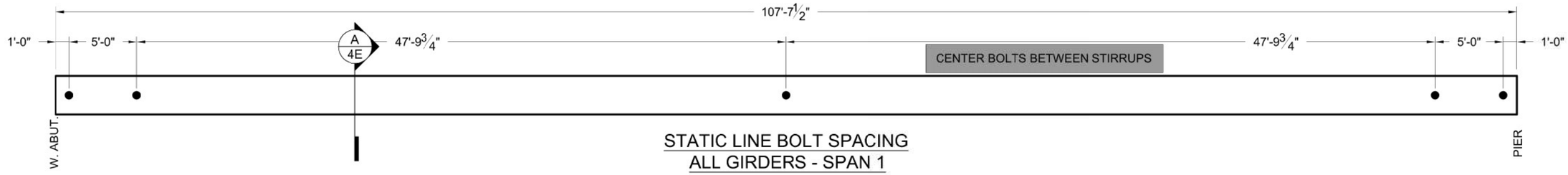

STATIC LINE BOLT SPACING
ALL GIRDERS - SPAN 1

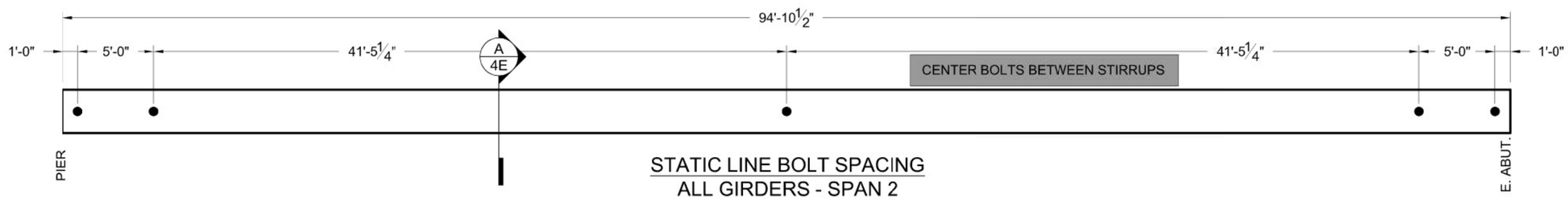

STATIC LINE BOLT SPACING
ALL GIRDERS - SPAN 2

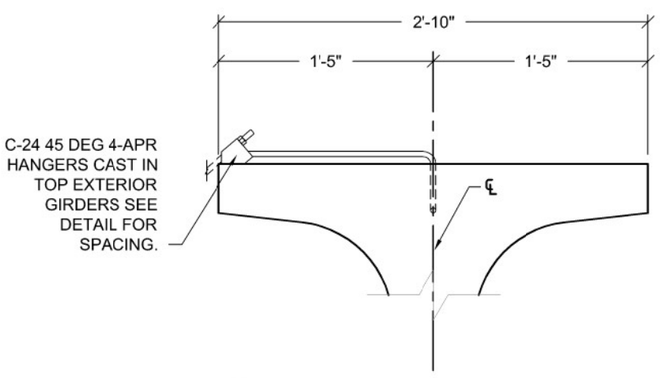

A 4D CAST IN HANGER DETAIL
1" = 1'0"

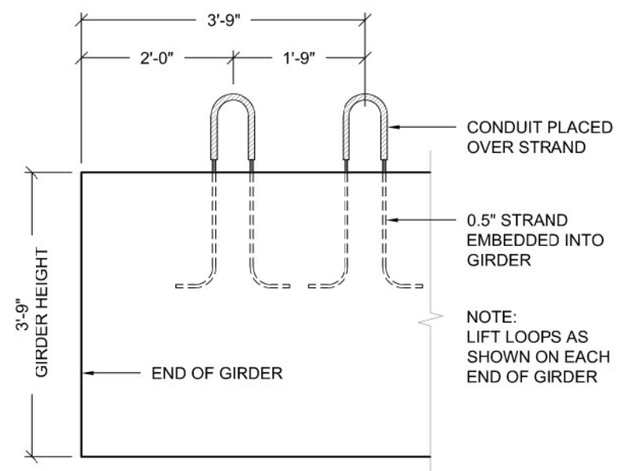

LIFT LOOP PLACEMENT DETAIL >50' LONG
SCALE: 1/2" = 1'-0"

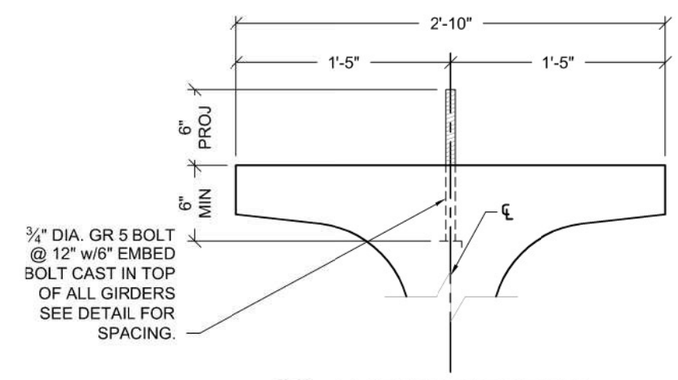

A 4E CAST IN BOLT DETAIL
1" = 1'0"

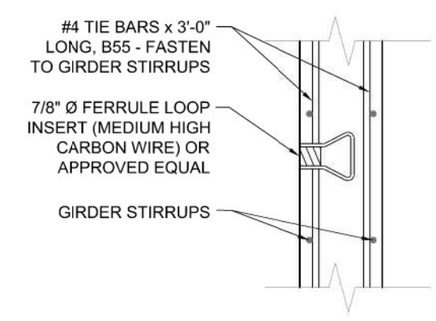

EXTERIOR GIRDER DETAIL
SCALE: 1" = 1'-0"

REVISION HISTORY

REVISION #	DESCRIPTION	DATE
1	SUBMITTED FOR APPROVAL	1-29-13
2	RESUBMITTED FOR APPROVAL	1-30-13
3	SUBMITTED FOR STATE APPROVAL	2-4-13
4	RESUBMITTED FOR STATE APPROVAL	2-5-13

Project: GREENFIELD AVE. OVER USH 45/IH 94

Title: STATIC LINE BOLT & HARDWARE DETAIL

COUNTY MATERIALS CORPORATION
1111 MENOMONIE STREET
EAU CLAIRE, WI 54703
PHONE: (715) 834-7701
FAX : (715) 834-5583

1104 E. L-T TOWNLINE ROAD
JANESVILLE, WI 53546
PHONE: (608) 373-9950

pci CERTIFIED PLANT

Drawn By: CM/JO/PG
Batterman engineers surveyors planners

Contractor: LUNDA
County: MILWAUKE
City/Town: WEST ALLIS

Scale Unless Noted: 1/8" = 1'-0"
Job Number: -

Sheet No.: 4D

38 - 0.6" DIA. 270 K STRAND PER GIRDER
INITIAL TENSION EACH PARALLEL STRAND TO 5000# AND EACH DRAPED STRAND TO 3000#
AREA OF STRAND = VARIES
_____ PULL _____ #

TOP MEMBER TO HAVE NOTE 1 SHEET 1 FINISH f'c 6800 PSI f'c 9000 PSI

ESTIMATED WEIGHT CALCULATION

SPAN 1
GIRDERS 1-16
LENGTH = 107'-7 1/2" EACH GIRDER

83,948 POUNDS PER GIRDER

NOTE: FINAL ELONGATIONS TO BE CALCULATED AT PLANT BY QUALITY CONTROL.

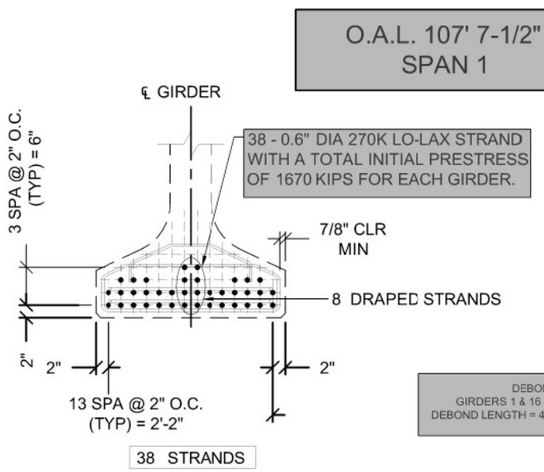

0.6" Ø STRAND ARRANGEMENT
SCALE: 1/2" = 1'-0"

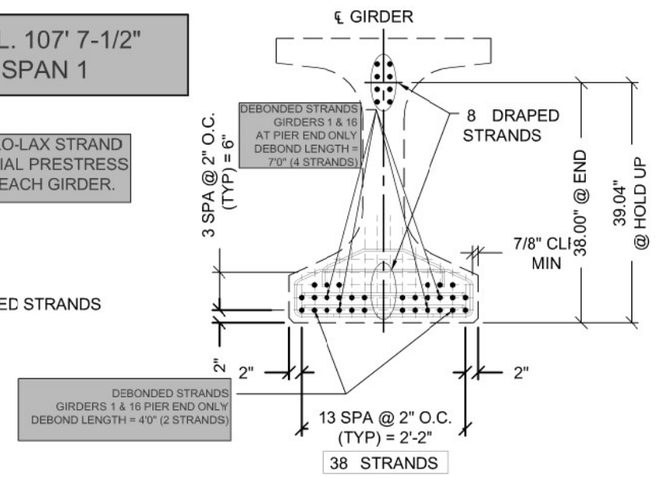

DRAPED STRAND @ END
SCALE: 1/2" = 1'-0"

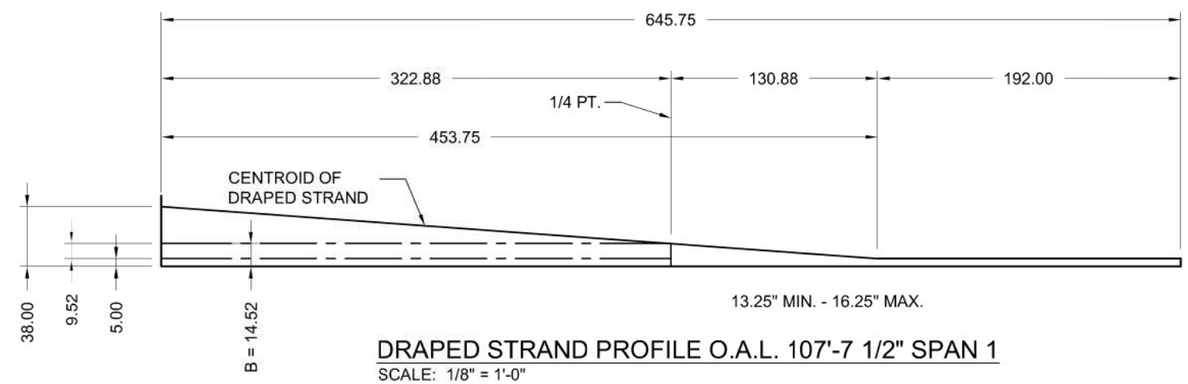

DRAPED STRAND PROFILE O.A.L. 107'-7 1/2" SPAN 1
SCALE: 1/8" = 1'-0"

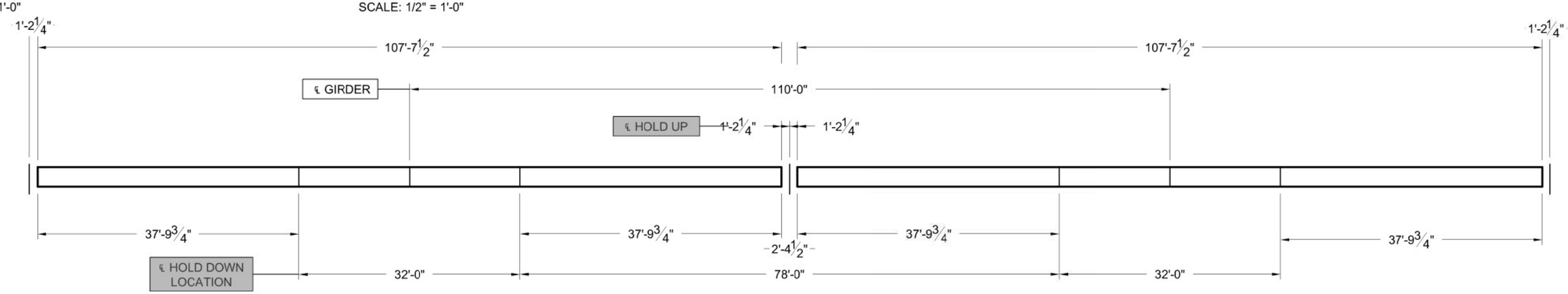

CAST LINES 38.32 CU.YD. = TOTAL FOR 1 POUR (2 BEAMS)
SCALE: 1/16" = 1'-0"

REVISION HISTORY

REVISION #	DESCRIPTION	DATE
1	SUBMITTED FOR APPROVAL	1-29-13
2	RESUBMITTED FOR APPROVAL	1-30-13
3	SUBMITTED FOR STATE APPROVAL	2-4-13
4	RESUBMITTED FOR STATE APPROVAL	2-5-13

Project: GREENFIELD AVE. OVER USH 45/IH 94

Title: 45W STRAND AND LINE DETAILS - SPAN 1

COUNTY MATERIALS CORPORATION
1111 MENOMONIE STREET
EAU CLAIRE, WI 54703
PHONE: (715) 834-7701
FAX : (715) 834-5583

1104 E. L-T TOWNLINE ROAD
JANESVILLE, WI 53546
PHONE: (608) 373-9950

pci CERTIFIED PLANT

Drawn By: CM/JO/PG
Batterman engineers surveyors planners
Contractor: LUNDA
County: MILWAUKE
City/Town: WEST ALLIS
Scale Unless Noted: VARIES
Job Number: -
Sheet No.: 5A

28 - 0.6" DIA. 270 K STRAND PER GIRDER
INITIAL TENSION EACH PARALLEL STRAND TO 5000# AND 3,000# FOR EACH DRAPED STRAND
AREA OF STRAND = VARIES

_____ PULL _____ #

TOP MEMBER TO HAVE NOTE 1 FINISH f'c 6800 PSI f'c 9000 PSI
SHEET 1

ESTIMATED WEIGHT CALCULATION

SPAN 2
GIRDERS 17-32
LENGTH = 94'-10 1/2" EACH GIRDER

74,003 POUNDS PER GIRDER

NOTE: FINAL ELONGATIONS TO BE CALCULATED AT PLANT BY QUALITY CONTROL.

O.A.L. 94' 10-1/2"
SPAN 2

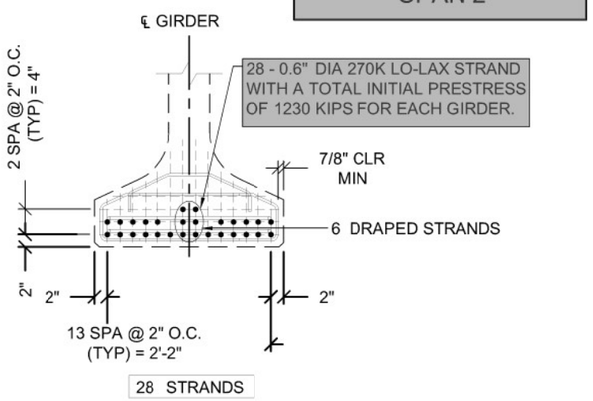

0.6" Ø STRAND ARRANGEMENT
SCALE: 1/2" = 1'-0"

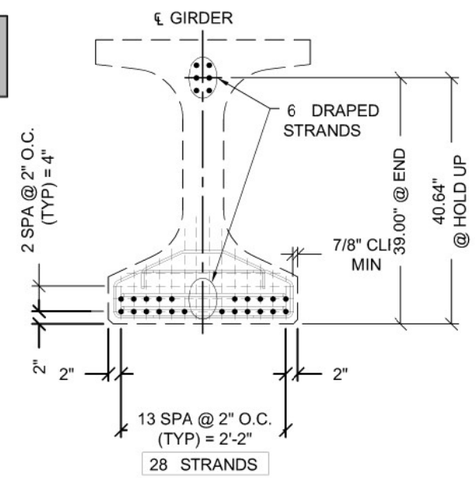

DRAPED STRAND @ END
SCALE: 1/2" = 1'-0"

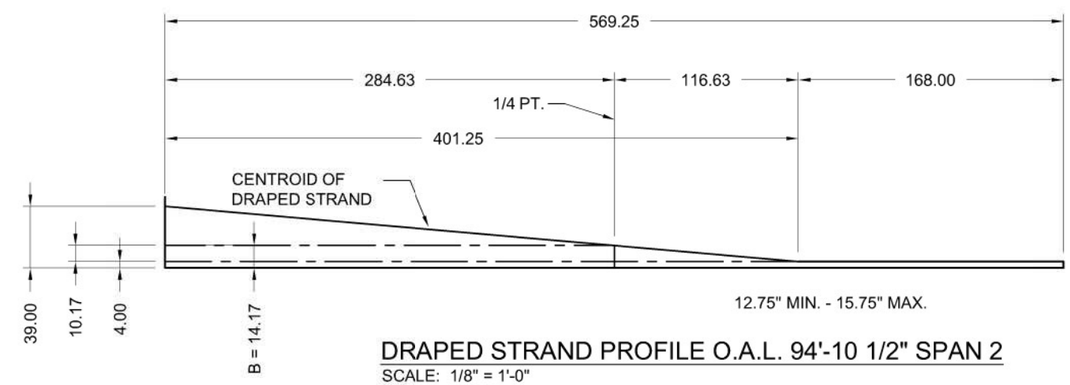

DRAPED STRAND PROFILE O.A.L. 94'-10 1/2" SPAN 2
SCALE: 1/8" = 1'-0"

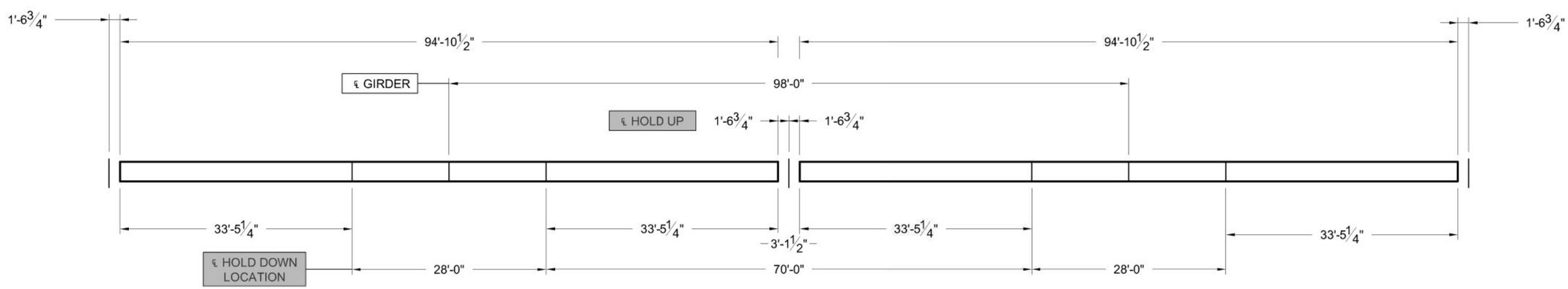

REVISION HISTORY

REVISION #	DESCRIPTION	DATE
1	SUBMITTED FOR APPROVAL	1-29-13
2	RESUBMITTED FOR APPROVAL	1-30-13
3	SUBMITTED FOR STATE APPROVAL	2-4-13
4	RESUBMITTED FOR STATE APPROVAL	2-5-13

Project: GREENFIELD AVE. OVER USH 45/IH 94

Title: 45W STRAND AND LINE DETAILS - SPAN 2

COUNTY MATERIALS CORPORATION
1111 MENOMONIE STREET
EAU CLAIRE, WI 54703
PHONE: (715) 834-7701
FAX : (715) 834-5583

1104 E. L-T TOWNLINE ROAD
JANESVILLE, WI 53546
PHONE: (608) 373-9950

pci CERTIFIED PLANT

Drawn By:	Contractor:		Scale Unless Noted:	Sheet No.:
CM/JO/PG	LUNDA		VARIES	5B
Batterman engineers surveyors planners	County: MILWAUKE	City/Town: WEST ALLIS	Job Number: -	

STATE PROJECT NUMBER
1060-33-77

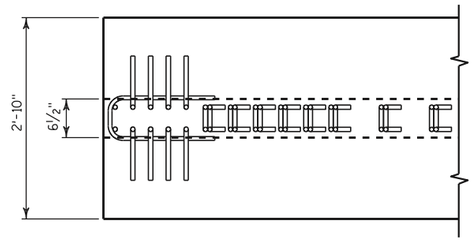

TOP FLANGE

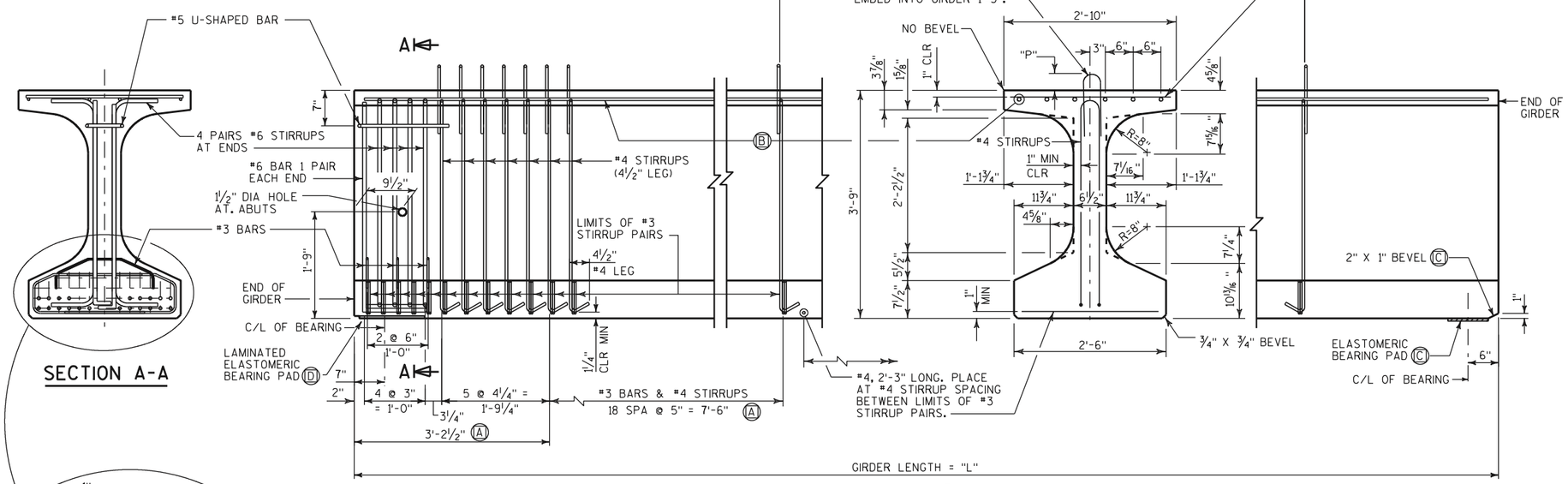

SECTION A-A

SIDE VIEW & TYP SECTION IN SPAN

(A) DETAIL TYP AT EACH END

(B) 6 #4 BARS, FULL LENGTH, MIN LAP = 1'-8"

(C) DETAIL TYP AT EACH END FOR SPAN 1 AND FOR SPAN 2 AT PIER

(D) SPAN 2 AT ABUMENT. SEE SHEET 23 FOR DETAILS

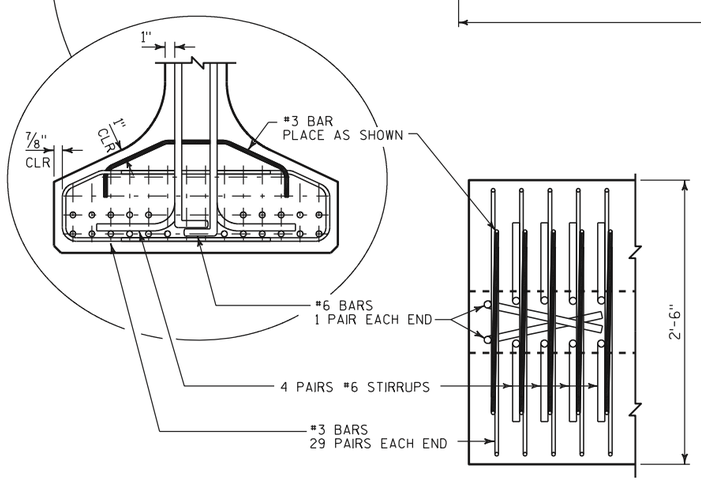

BOTTOM FLANGE

GIRDER NOTES

TOP OF GIRDER TO BE ROUGH FLOATED AND BROOMED TRANSVERSELY FOR BONDING TO THE SLAB, EXCEPT THE OUTSIDE 8" OF GIRDER, WHICH SHALL RECEIVE A SMOOTH FINISH. AN APPROVED CONCRETE SEALER SHALL BE APPLIED TO ALL SMOOTH SURFACES INCLUDING THE OUTSIDE 8" OF THE TOP FLANGE.

DO NOT APPLY CONCRETE SEALER TO SURFACES RECEIVING APPLICATION OF CONCRETE STAINING.

THE GIRDERS SHALL BE PROVIDED WITH A SUITABLE LIFTING DEVICE FOR HANDLING AND ERECTING THE GIRDERS.

PRESTRESSING STRANDS SHALL BE 0.6"Φ - 7 WIRE LOW-RELAXATION STRANDS WITH AN ULTIMATE STRENGTH OF 270,000 PSI AND SHALL BE FLUSH WITH THE ENDS OF THE GIRDER. END OF STRANDS SHALL BE COATED WITH NON-BITUMINOUS JOINT SEALER.

FOR DIAPHRAGM INSERT & CONNECTION DETAILS, SEE "STEEL DIAPHRAGM" SHEET.

ALL GIRDERS SHALL BE CAST FULL LENGTH AS SHOWN.

SPACING SHOWN FOR #4 STIRRUPS IS FOR GRADE 60 REINFORCEMENT. IF THE FABRICATOR WANTS TO BUILD A BAR STEEL CAGE BY WELDING LONGITUDINAL REINFORCEMENT TO THE #4 STIRRUPS, THE FOLLOWING OPTION IS AVAILABLE:

1. USE ASTM A706, GRADE 60 REINFORCEMENT AND THE STIRRUP SPACING AS SHOWN ON THE PLANS.

AN ALTERNATE EQUIVALENT OF WELDED WIRE FABRIC (WWF) ASTM A497 MAY BE SUBSTITUTED FOR THE STIRRUP REINFORCEMENT SHOWN, UPON APPROVAL OF THE STRUCTURES DEVELOPMENT CHIEF, (608) 266-5161

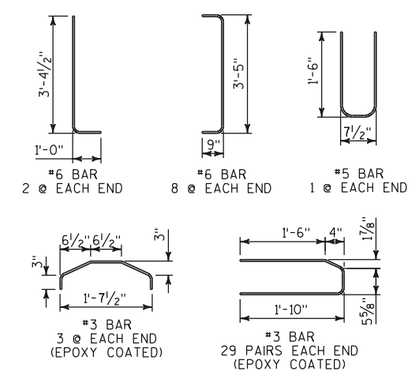

GIRDER DATA

SPAN	GIRDER NUMBERS	GIRDER LENGTH "L"	DEAD LOAD DEFL (IN.) ** 1/10	2/10	3/10	4/10	5/10	CONC STRGTH f'c (psi)	f'ci (psi) *	"P"	DIA OF STRAND (IN.)	DRAPED PATTERN TOTAL NO OF STRANDS	(IN.) "A"	"B" (MIN)	"B" (MAX)	"C"	NO OF DEBONDED STRANDS ***
1	1,16	107'-7 1/2"	7/8"	1 5/8"	2 1/8"	2 1/2"	2 5/8"	9000	6800	7"	0.6	38	38	13 1/4"	16 1/4"	5	6
1	2-15	107'-7 1/2"	7/8"	1 5/8"	2 1/8"	2 1/2"	2 5/8"	9000	6800	7"	0.6	38	38	13 1/4"	16 1/4"	5	0
2	1-16	94'-10 1/2"	1/2"	7/8"	1 1/4"	1 1/2"	1 1/2"	9000	6800	7"	0.6	28	39	12 3/4"	15 3/4"	4	0

* MINIMUM CYLINDER STRENGTH OF CONCRETE @ TIME OF TRANSFER OF PRESTRESS FORCE.
** SEE DEAD LOAD DEFLECTION DIAGRAM, SHEET 22
*** DEBOND STRANDS AT THE PIER END OF THE GIRDER ONLY. THE DEBONDED END OF GIRDER SHALL BE MARKED TO BE EASILY IDENTIFIABLE DURING ERECTION.

NO.	DATE	REVISION	BY

STATE OF WISCONSIN
DEPARTMENT OF TRANSPORTATION
STRUCTURES DESIGN SECTION

STRUCTURE B-40-769

DRAWN BY ASW | PLANS CK'D. KES

45W" PRESTRESSED GIRDER

SHEET 21 OF 41

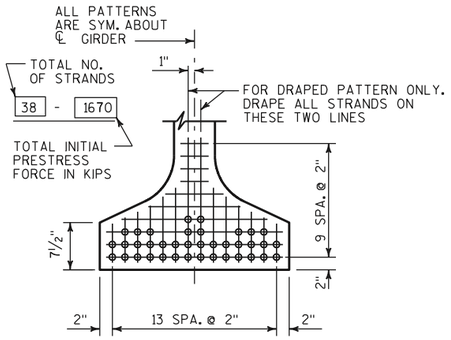

STRAND PATTERN - SPAN 1

0.6" DIA. STRANDS

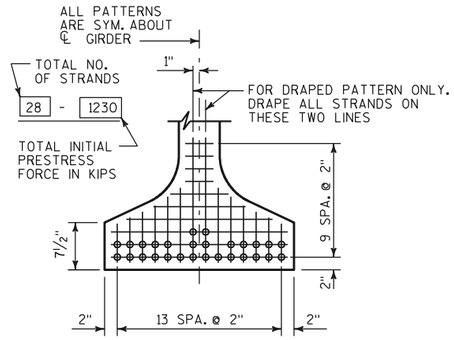

STRAND PATTERN - SPAN 2

0.6" DIA. STRANDS

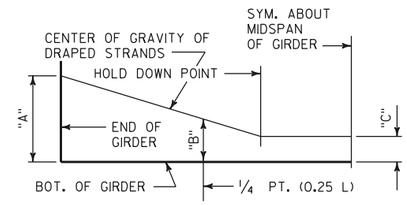

DRAPED STRAND PROFILE

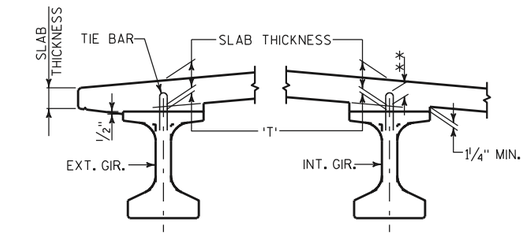

SLAB HAUNCH DETAIL

IF 1¼" MINIMUM HAUNCH HEIGHT AT EDGE OF GIRDER CANNOT BE MAINTAINED, THE GRADE LINE MAY BE REVISED BY THE ENGINEER AT THE OPTION OF THE CONTRACTOR. THE PLAN SLAB THICKNESS SHALL BE HELD. NOTIFY THE STRUCTURES SECTION IF THE GRADE LINE IS RAISED FROM THE PLAN PROFILE BY MORE THAN ½" OR,

** IF 3" MINIMUM DECK EMBEDMENT OF TIE BAR CANNOT BE OBTAINED.

TO DETERMINE 'T', ELEV. OF TOP OF GIR'S. AT ℄ OF SUBSTRUCTURE UNITS & AT 1/10 POINTS OF EACH SPAN SHALL BE TAKEN. THEN FOLLOW THIS PROCESS:

TOP OF DECK ELEV. AT FINAL GRADE
- TOP OF GIRDER ELEVATION
+ DEAD LOAD DEFLECTION
- SLAB THICKNESS
= HAUNCH HEIGHT 'T'

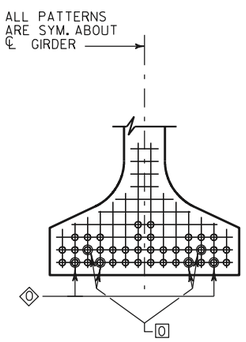

DEBONDED STRANDS - SPAN 1

GIRDERS 1 & 16

DEBOND AT PIER END ONLY

0 DEBOND LENGTH = 7'-0" (4 STRANDS)

0 DEBOND LENGTH = 4'-0" (2 STRANDS)

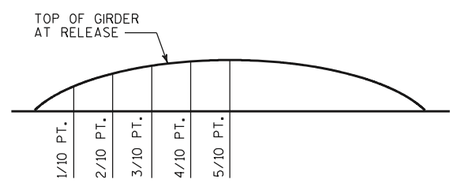

THEORETICAL CAMBER AT STRAND RELEASE

CAMBER IS SYMMETRIC ABOUT MID POINT OF BEAM

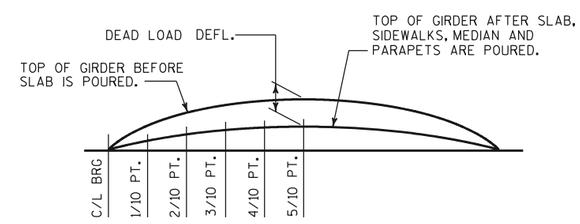

DEAD LOAD DEFLECTION DIAGRAM

DEFLECTIONS ARE SYMMETRIC ABOUT MID POINT OF BEAM

THEORETICAL CAMBER *					
SPAN	1/10	2/10	3/10	4/10	5/10
1	1⅛"	2"	2⅝"	3"	3⅛"
2	¾"	1¼"	1⅝"	1⅞"	1⅞"

* THE THEORETICAL INITIAL CAMBER VALUE AT THE TIME OF RELEASE. THESE VALUES ARE PRESENTED FOR INFORMATION ONLY. THE CAMBER VALUES ARE NOT TO BE USED IN DETERMINING HAUNCH HEIGHT 'T'.

8

8

NO.	DATE	REVISION	BY

STATE OF WISCONSIN
DEPARTMENT OF TRANSPORTATION
STRUCTURES DESIGN SECTION

STRUCTURE B-40-769

DRAWN BY ASW | PLANS CK'D. KES

45W" PRESTRESSED GIRDER DETAILS

SHEET 22 OF 41

Michigan Department of Transportation (MDOT)

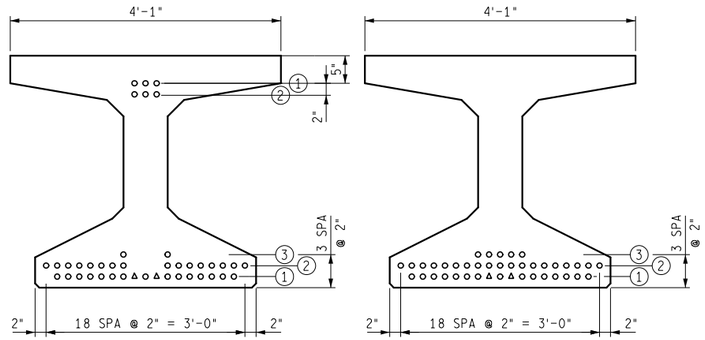

AT BEAM ENDS

AT MID-SPAN

STRAND LOCATIONS

△ DEBOND 2 STRANDS FOR 4'-0" EACH END

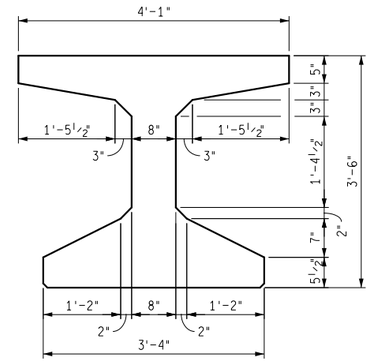

TYPICAL BEAM SECTION

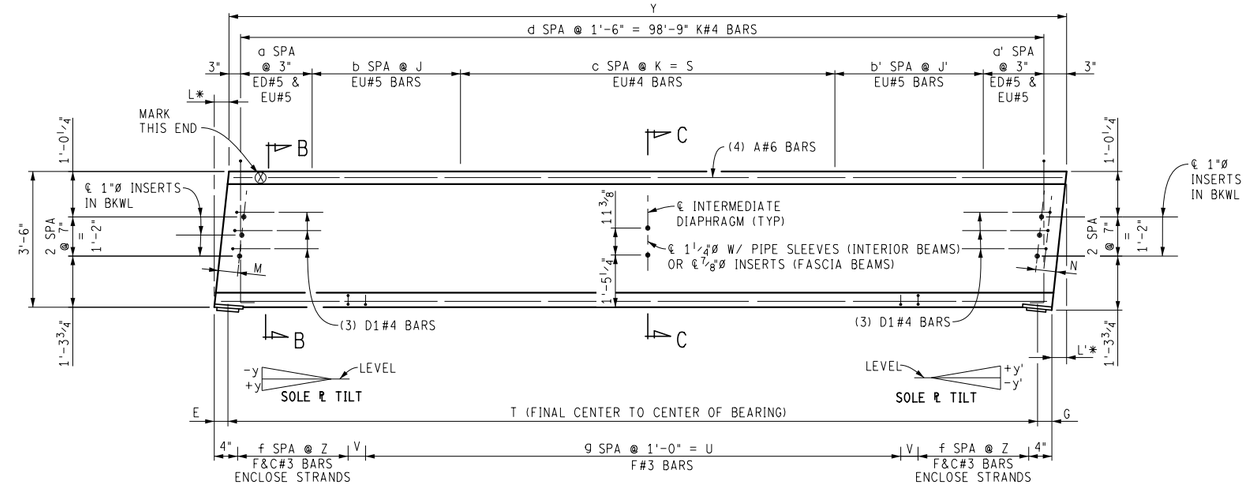

ELEVATION

STRAND LOCATION TABLE

SPAN	MIDSPAN BOTTOM ①	②	③	④	⑤	⑥	⑦	⑧	⑨	⑩	⑪	⑫	END FACE BOTTOM ①	②	③	④	⑤	⑥	⑦	⑧	⑨	⑩	⑪	⑫	END FACE TOP ①	②	③	TOTAL NUMBER	REQUIRED CONCRETE COMPRESSIVE STRENGTH (PSI) 28 DAY	AT RELEASE
1	15	17	5	--	--	--	--	--	--	--	--	--	15	14	--	--	--	--	--	--	--	--	--	--	3	3	--	35	7500	6500
2	15	17	5	--	--	--	--	--	--	--	--	--	15	14	--	--	--	--	--	--	--	--	--	--	3	3	--	35	7500	6500

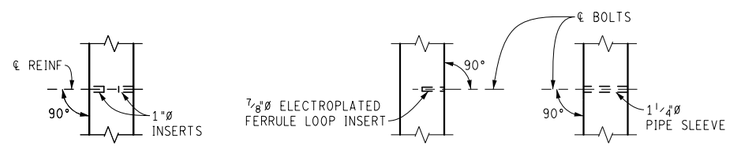

AT ABUTMENT ENDS

FASCIA BEAM AT DIAPHRAGM

INTERIOR BEAM AT DIAPHRAGM

CONCRETE INSERT DETAILS

CONTINOUS HOLES IN BEAM WEB SHALL BE AS SHOWN ABOVE
(OMIT INSERTS ON OUTSIDE OF FASCIA BEAMS)

BEAM DATA

SPAN	1	2
MARK	A-G	A-G
NO. REQ.	7	7
a	27	27
a'	27	27
b	26	26
b'	26	26
c	60	60
d	66	66
E	6"	6"
f	11	11
g	86	86
G	6"	6"
J	6"	6"
J'	6"	6"
K	1'-0"(-)	1'-0"(-)
L✱	0"	0"
L'✱	0"	0"
M	9¾"	--
N	--	9¾"
S	59'-11"	59'-11"
T	98'-9"	98'-9"
U	86'-0"	86'-0"
V	10½"	10½"
Y	99'-11"	99'-11"
Z	6"	6"

✱ FORMING DIMENSION

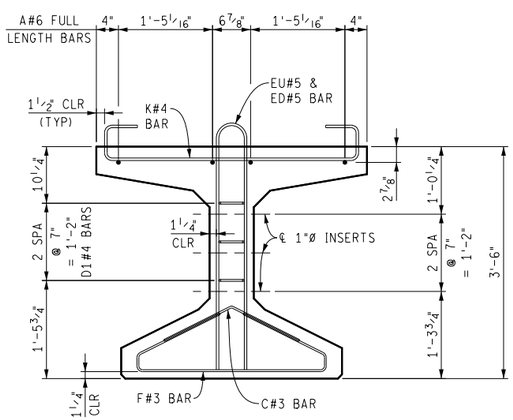

SECTION B-B

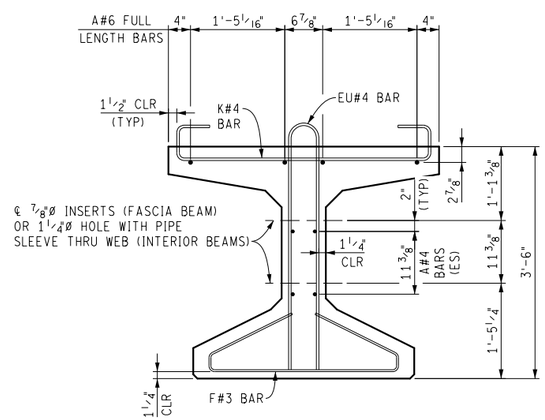

SECTION C-C

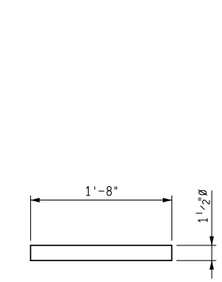

POSITION DOWEL DETAIL

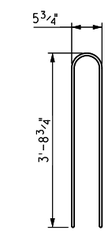

ED#5 BAR

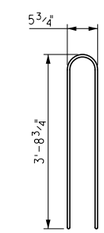

END VIEW

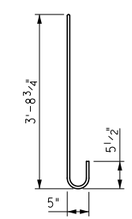

SIDE VIEW

EU #5 BAR

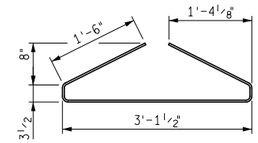

F#3 BAR

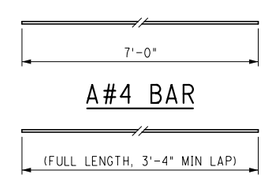

A#4 BAR

A#6 BAR

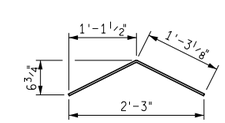

C#3 BAR

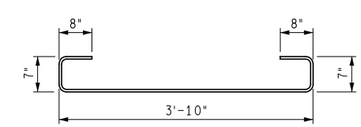

K#4 BAR

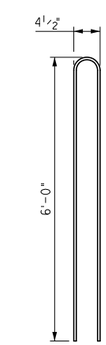

D1#4 BAR

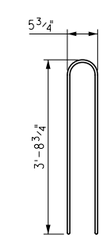

END VIEW

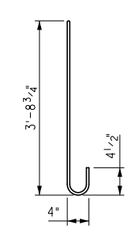

SIDE VIEW

EU #4 BAR

FINAL ROW PLAN REVISIONS (SUBMITTAL DATE:)							
NO.	DATE	AUTH	DESCRIPTION	NO.	DATE	AUTH	DESCRIPTION

MDOT Michigan Department of Transportation

NO SCALE

DRAWN BY: J. CHARTER | DATE: 09/19/18 | CS: S07 OF 11111

CHK'D BY: C.MAYORAL CORR BY: JMG | DESIGN UNIT: OCCHIUTO | JN: 115754A

FILE: s07 11111 bmpci.dgn | TSC: KALAMAZOO

PRESTRESSED CONCRETE BULB-TEE BEAM DETAILS

DRAWING: S07 BMPCI 002 | SHEET: SECT 2

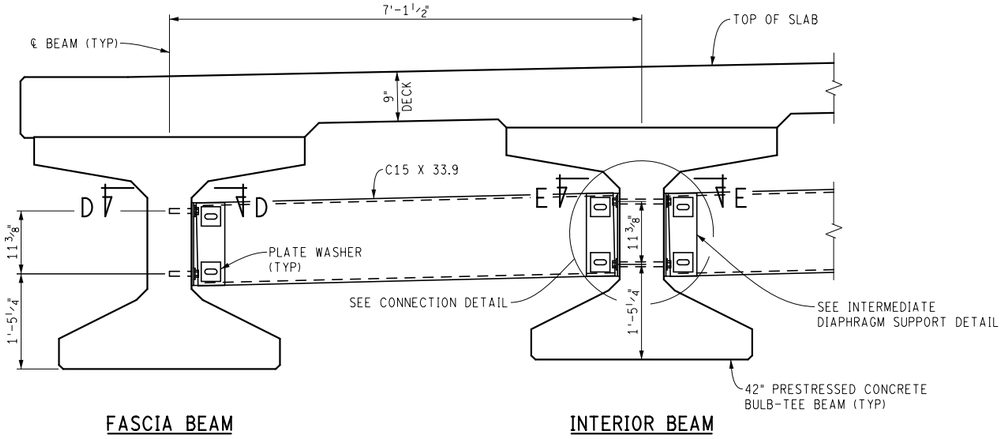

PARTIAL TRANSVERSE SECTION OF DIAPHRAGM - D1

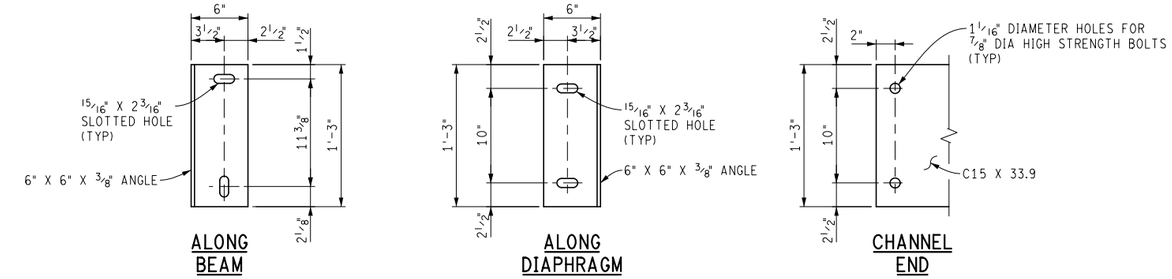

INTERMEDIATE DIAPHRAGM SUPPORT DETAIL

INCLUDES ALL COMPONENTS, EXCEPT CONCRETE INSERTS NECESSARY TO FURNISH, FABRICATE AND ERECT THE DIAPHRAGM ASSEMBLY. PAID FOR AS "STEEL DIAPHRAGM, PREST CONC BEAM, FURN AND FAB".

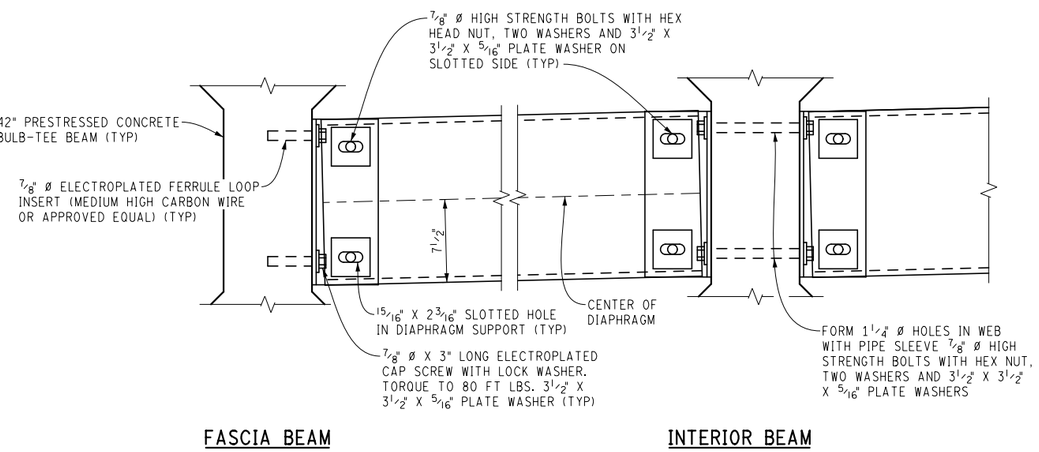

CONNECTION DETAIL

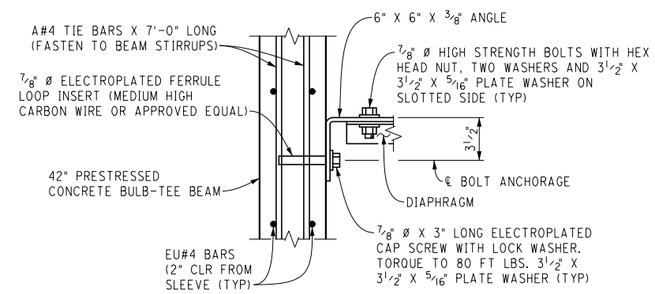

SECTION D-D

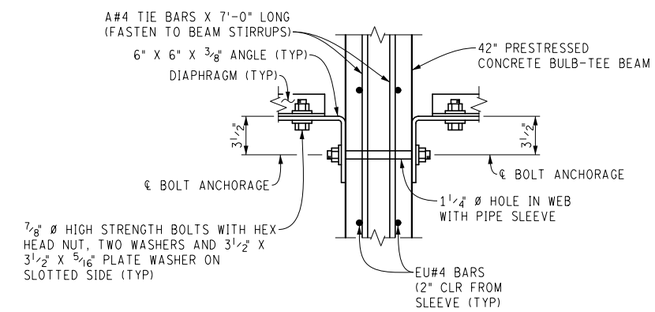

SECTION E-E

ELASTOMERIC PAD AND SHIM DIMENSIONS				
	SPAN 1		SPAN 2	
	ABUT A	PIER 1	PIER 1	ABUT B
THICKNESS	2 1/2"	2 1/2"	2 1/2"	2 1/2"
(L) PARALLEL TO BEAM	9"	9"	9"	9"
(W) PERPENDIC. TO BEAM	3'-1"	3'-1"	3'-1"	3'-1"
GG	1/4"	1/4"	1/4"	1/4"
LAYERS	3 @ 1/2"	3 @ 1/2"	3 @ 1/2"	3 @ 1/2"
SHIMS	4 @ 1/8"	4 @ 1/8"	4 @ 1/8"	4 @ 1/8"

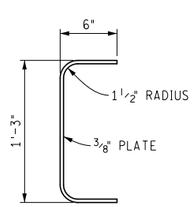

ALTERNATE DIAPHRAGM

HOLES ARE SIMILAR TO CHANNEL END

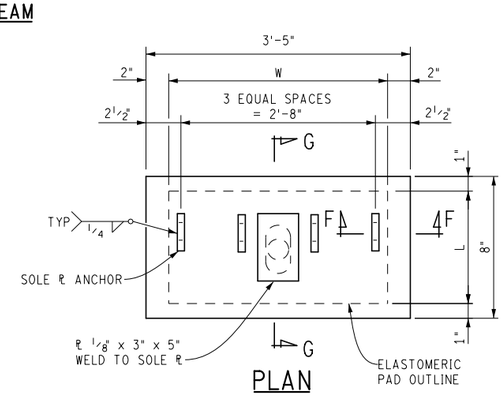

PLAN

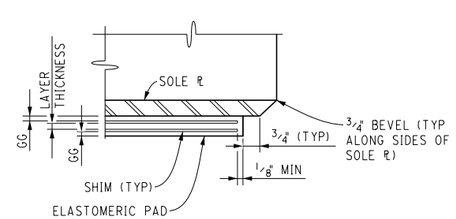

SECTION F-F

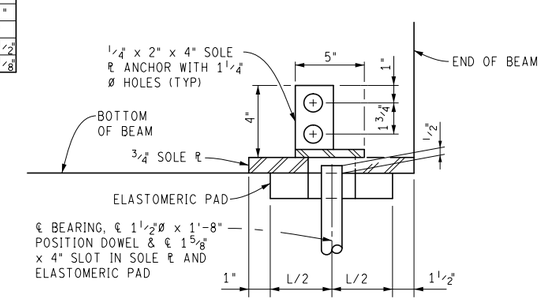

SECTION G-G

BEARING DETAILS

FINAL ROW PLAN REVISIONS (SUBMITTAL DATE:)							
NO.	DATE	AUTH	DESCRIPTION	NO.	DATE	AUTH	DESCRIPTION

MDOT Michigan Department of Transportation

NO SCALE

DRAWN BY: J. CHARTER	DATE: 09/19/18	CS: S07 OF 11111	PRESTRESSED CONCRETE BULB-TEE BEAM DETAILS	DRAWING
CHK'D BY: C.MAYORAL CORR BY: JMG	DESIGN UNIT: OCCHIUTO	JN: 115754A		S07 BMPCI 003
FILE: s07 11111 bmpci.dgn	TSC: KALAMAZOO			SHEET SECT 2

BEAM DATA

SPAN	1			2			3			4			5			6						
BEAM(S)	A	B-G	H	A	B-G	H	A	B-G	H	A	B-L	M	A	B-L	M	A	B-G	H	J	K	L	M
NO.REQ.	1	6	1	1	6	1	1	6	1	1	10	1	1	10	1	1	6	1	1	1	1	1
a	5	5	4	6	6	6	5	5	5	5	3	5	4	4	4	7	7	7	7	7	7	7
b	0	0	0	39	38	26	14	30	16	0	8	0	13	20	11	25	40	41	44	44	48	40
b'	0	5	0	40	39	29	0	15	7	9	5	10	24	21	13	17	26	27	27	27	29	25
c	116	124	117	43	58	64	101	83	79	54	67	51	39	46	45	51	42	41	40	40	39	42
E	5 1/2"	5 1/2"	5 1/2"	5 1/2"	5 1/2"	5 1/2"	5 1/2"	5 1/2"	5 1/2"	4 1/2"	4 1/2"	4 1/2"	4 1/2"	4 1/2"	4 1/2"	5 1/2"	5 1/2"	5 1/2"	5 1/2"	5 1/2"	5 1/2"	5 1/2"
f	18	18	18	18	18	18	18	18	18	18	18	18	18	18	18	18	18	18	18	18	18	18
g	59	59	59	70	70	70	62	62	62	59	59	59	64	64	64	84	84	84	84	84	84	84
G	5 1/2"	5 1/2"	5 1/2"	5 1/2"	5 1/2"	5 1/2"	5 1/2"	5 1/2"	5 1/2"	4 1/2"	4 1/2"	4 1/2"	4 1/2"	4 1/2"	4 1/2"	5"	5"	5"	5"	5"	5"	5"
J	0	0	0	9"	8"	9"	9"	7"	9"	0	1'-0"	0	1'-0"	1'-0"	1'-0"	1'-0"	10"	10"	10"	10"	9"	10"
J'	0	7"	0	9"	8"	8"	0	9"	1'-0"	1'-0"	1'-0"	1'-0"	1'-0"	1'-0"	1'-0"	1'-0"	1'-0"	1'-0"	1'-0"	1'-0"	1'-0"	1'-0"
K	11"	10"	11"	1'-5 5/8"	1'-2 3/4"	1'-3 3/4"	1'-0"	1 1 7/8"	1'-2"	1'-9 3/4"	1'-5"	1'-10 3/4"	1'-11 3/4"	1'-7"	2'-0"	1'-11 5/8"	1'-11 3/4"	1'-11 3/4"	1'-11 5/8"	1'-11 5/8"	1'-11 3/4"	2'-0"
L*	0	0	0	0	0	0	0	0	0	0	0	0	-1 1/4"	-1"	-1"	-1 1/2"	-1 1/2"	-1 1/2"	-1 1/2"	-1 1/2"	-1 1/2"	-1 1/2"
L'*	0	0	0	0	0	0	0	0	0	-1 1/4"	-1 1/4"	-1 1/4"	-1 1/2"	-1 1/2"	-1 1/2"	-1 3/4"	-1 3/4"	-1 3/4"	-1 3/4"	-1 3/4"	-1 3/4"	-1 3/4"
M#	9 1/4"	9 1/4"	9 1/4"													8 3/4"	8 3/4"	8 3/4"	8 3/4"	8 3/4"	8 3/4"	8 3/4"
N#							1'-0 1/2"	1'-0 1/2"	1'-0 1/2"	1 1 1/2"	1 1 1/2"	1 1 1/2"										
R	43'-7 1/4"	43'-7 1/4"	43'-7 1/4"	50'-3 3/4"	50'-3 3/4"	50'-3 3/4"	45'-6 1/8"	45'-6 1/8"	45'-6 1/8"	43'-10 1/8"	43'-10 1/8"	43'-10 1/8"	46'-6 7/8"	46'-6 7/8"	46'-6 7/8"	58'-6 1/8"	58'-6 1/8"	58'-6 1/8"	58'-5 3/4"	58'-5 1/2"	58'-5 1/4"	58'-5"
S	106'-0 1/4"	103'-1 1/4"	106'-6 1/4"	63'-0 3/8"	70'-11 1/8"	83'-5 3/8"	100'-3 1/4"	82'-0 1/4"	91'-9 1/4"	97'-7 1/8"	94'-7 1/8"	96'-7 1/8"	76'-10"	72'-10"	89'-10"	100'-3 3/8"	82'-11 3/8"	81'-1 3/8"	78'-6 5/8"	78'-5 7/8"	77'-1 1/4"	83'-8 5/8"
T	108'-1 1/4"	108'-1 1/4"	108'-1 1/4"	124'-10 3/8"	124'-10 3/8"	124'-10 3/8"	112'-10 1/4"	112'-10 1/4"	112'-10 1/4"	108'-10 1/8"	108'-10 1/8"	108'-10 1/8"	115'-7"	115'-7"	115'-7"	145'-4 7/8"	145'-4 7/8"	145'-4 7/8"	145'-4 1/8"	145'-3 3/8"	145'-2 3/4"	145'-2 1/8"
U	88'-6"	88'-6"	88'-6"	105'-0"	105'-0"	105'-0"	93'-0"	93'-0"	93'-0"	88'-6"	88'-6"	88'-6"	96'-0"	96'-0"	96'-0"	126'-0"	126'-0"	126'-0"	126'-0"	126'-0"	126'-0"	126'-0"
V	11 1/8"	11 1/8"	11 1/8"	1'-0 3/4"	1'-0 3/4"	1'-0 3/4"	1'-0 5/8"	1'-0 5/8"	1'-0 5/8"	1'-2 1/2"	1'-2 1/2"	1'-2 1/2"	10"	10"	10"	9 3/4"	9 3/4"	9 3/4"	9 3/8"	9"	8 5/8"	8 3/8"
Y	109'-0 1/4"	109'-0 1/4"	109'-0 1/4"	125'-9 3/8"	125'-9 3/8"	125'-9 3/8"	113'-9 1/4"	113'-9 1/4"	113'-9 1/4"	109'-7 1/8"	109'-7 1/8"	109'-7 1/8"	116'-4"	116'-4"	116'-4"	146'-3 3/8"	146'-3 3/8"	146'-3 3/8"	146'-2 5/8"	146'-1 7/8"	146'-1 1/4"	146'-0 5/8"
Z	6"	6"	6"	6"	6"	6"	6"	6"	6"	6"	6"	6"	6"	6"	6"	6"	6"	6"	6"	6"	6"	6"
APPROX. WEIGHT	50 TONS	50 TONS	50 TONS	57 TONS	57 TONS	57 TONS	52 TONS	52 TONS	52 TONS	50 TONS	50 TONS	50 TONS	53 TONS	53 TONS	53 TONS	67 TONS	67 TONS	67 TONS	67 TONS	67 TONS	67 TONS	67 TONS

* FORMING DIMENSION. IF L OR L' IS COMPUTED TO BE BETWEEN -1/2" & +1/2" USE L= 0 OR L'= 0.

\# MEASURED ALONG BEAM ℄.

SOLE ℄ TILT TABLE

BEAM LINE	SPAN 1		SPAN 2		SPAN 3	
	ABUT C	PIER 6	PIER 6	PIER 7	PIER 7	PIER 8
	y	y'	y	y'	y	y'
A-H	0"	0"	0"	0"	0"	1/4"
	SPAN 4		SPAN 5		SPAN 6	
BEAM LINE	PIER 8	PIER 9	PIER 9	PIER 10	PIER 10	ABUT D
	y	y'	y	y'	y	y'
A-M	0"	1/8"	1/8"	1/4"	1/4"	1/4"

STRAND LOCATION TABLE

SPAN	BEAM	MIDSPAN (SECTION B-B) BOTTOM ①	②	③	④	⑤	⑥	⑦	⑧	END FACE (SECTION A-A) BOTTOM ①	②	③	④	⑤	⑥	⑦	⑧	TOP ①	②	③	④	TOTAL NUMBER	REQUIRED CONC. COMPRESSIVE STRENGTH (PSI) 28 DAY	AT RELEASE
1	A	10	10	8	0	0	0	0	0	10	10	6	0	0	0	0	0	2	0	0	0	28	5000	4200
	B-G	6	8	8	6	4	0	0	0	6	8	8	6	2	0	0	0	2	0	0	0	32	5000	4800
	H	16	12	0	0	0	0	0	0	16	10	0	0	0	0	0	0	2	0	0	0	28	5000	4200
2	A	12	14	12	0	0	0	0	0	12	12	10	0	0	0	0	0	2	2	0	0	38	5300	5300
	B-G	10	10	12	6	4	0	0	0	10	10	12	6	2	0	0	0	2	0	0	0	42	5900	5900
	H	10	10	12	6	2	0	0	0	10	10	12	4	0	0	0	0	2	2	0	0	40	5400	5400
3	A	6	8	8	6	4	0	0	0	6	8	8	6	2	0	0	0	2	0	0	0	32	5000	4400
	B-G	8	8	10	6	4	0	0	0	8	8	10	6	2	0	0	0	2	0	0	0	36	5100	5100
	H	8	8	8	6	2	0	0	0	8	8	8	6	0	0	0	0	2	0	0	0	32	5000	4700
4	A	8	8	6	0	0	0	0	0	8	8	4	0	0	0	0	0	2	0	0	0	22	5000	3500
	B-L	6	4	6	6	2	0	0	0	6	4	6	6	2	0	0	0	2	0	0	0	24	5000	3500
	M	14	8	0	0	0	0	0	0	14	6	0	0	0	0	0	0	2	0	0	0	22	5000	3500
5	A	8	6	8	4	0	0	0	0	8	6	8	2	0	0	0	0	2	0	0	0	26	5000	3500
	B-L	12	14	0	0	0	0	0	0	12	12	0	0	0	0	0	0	2	0	0	0	26	5000	3700
	M	14	12	0	0	0	0	0	0	14	10	0	0	0	0	0	0	2	0	0	0	26	5000	3600
6	A	12	12	10	6	4	0	0	0	12	12	10	4	2	0	0	0	2	2	0	0	44	5600	5600
	B-G	12	12	12	6	4	0	0	0	12	12	12	4	2	0	0	0	2	2	0	0	46	5900	5900
	H	12	12	12	6	4	0	0	0	12	12	12	4	2	0	0	0	2	2	0	0	46	6000	6000
	J-K	12	14	12	6	4	0	0	0	12	14	12	4	2	0	0	0	2	2	0	0	48	6200	6200
	L-M	12	14	12	6	4	0	0	0	12	14	12	4	2	0	0	0	2	2	0	0	48	6100	6100

TOP LONGITUDINAL STEEL EA2#5 BARS

SPAN	1			2			3			4			5			6		
BEAM(S)	A	B-G	H	A	B-G	H	A	B-G	H	A	B-L	M	A	B-L	M	A-K	L	M
NO.REQ.	5	3	5	2	5	2	5	3	5	5	6	5	5	5	5	4	3	4
LENGTH	13'-0"	7'-0"	15'-0"	6'-0"	9'-0"	6'-0"	8'-0"	7'-0"	8'-0"	8'-0"	15'-0"	9'-0"	10'-0"	10'-0"	10'-0"	7'-0"	7'-0"	7'-0"
END	EACH END	RIGHT END	EACH END	EACH END	EACH END	EACH END	LEFT END	LEFT END	EACH END	EACH END	EACH END	EACH END	EACH END	EACH END	EACH END	LEFT END	LEFT END	LEFT END

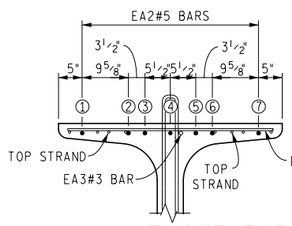

WHEN 2 REQ'D:	② ⑥
WHEN 3 REQ'D:	② ④ ⑥
WHEN 4 REQ'D:	① ③ ⑤ ⑦
WHEN 5 REQ'D:	①② ④ ⑥⑦
WHEN 6 REQ'D:	①②③ ⑤⑥⑦

EA2#5 BAR LOCATIONS

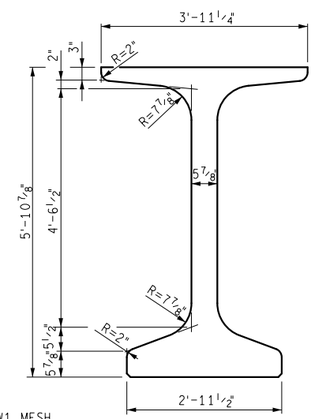

TYPICAL SECTION THRU GIRDER

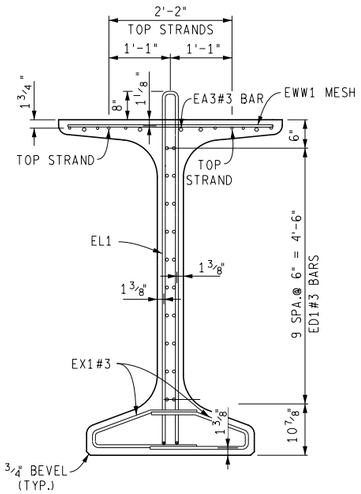

SECTION A-A

TOP STRANDS SHALL BE PRESTRESSED TO 4 KIPS EACH.

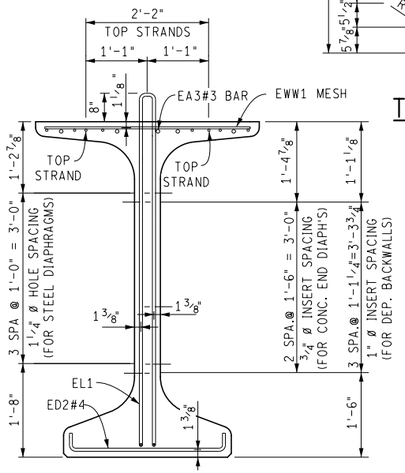

SECTION B-B

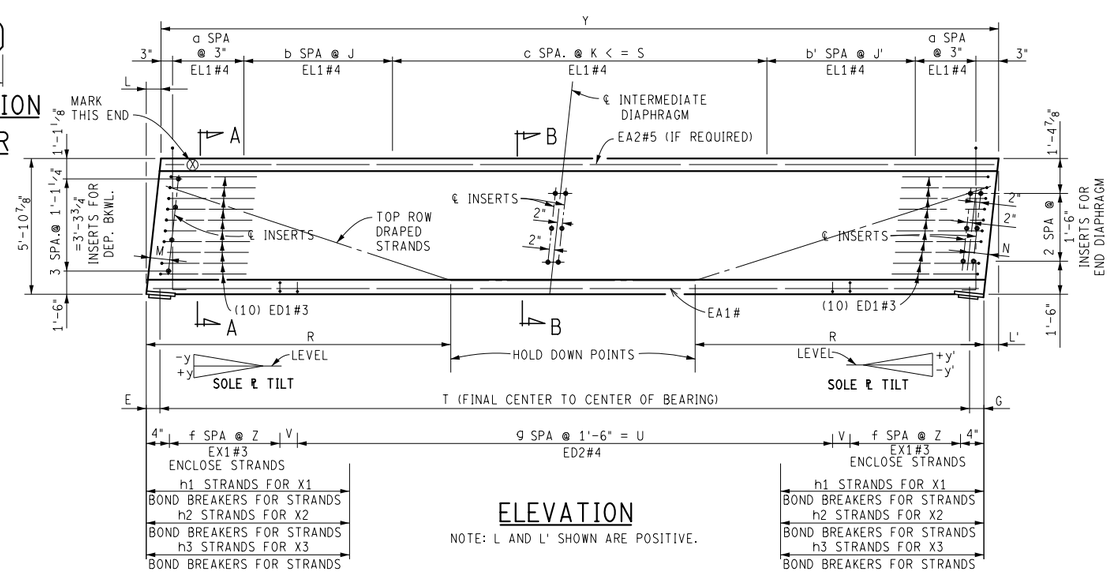

ELEVATION

NOTE: L AND L' SHOWN ARE POSITIVE.

BOND BREAKERS

		BEAM A h	BEAM A X	BEAMS B-G h	BEAMS B-G X	BEAM H h	BEAM H X		
SPAN 1	1	2	18'-0"	2	15'-6"	2	21'-6"		
	2	2	7'-0"	2	9'-0"	2	9'-0"		
	3	4	6'-0"	6	7'-6"	6	6'-0"		
		BEAM A h	BEAM A X	BEAMS B-G h	BEAMS B-G X	BEAM H h	BEAM H X		
SPAN 2	1	2	26'-6"	2	31'-0"	2	35'-6"		
	2	4	13'-0"	4	19'-6"	4	18'-6"		
	3	6	8'-0"	8	9'-6"	8	9'-6"		
		BEAM A h	BEAM A X	BEAMS B-G h	BEAMS B-G X	BEAM H h	BEAM H X		
SPAN 3	1	2	30'-6"	2	29'-0"	2	19'-6"		
	2	2	16'-6"	4	16'-0"	2	10'-0"		
	3	6	8'-0"	8	8'-6"	6	8'-6"		
		BEAM A h	BEAM A X	BEAMS B-L h	BEAMS B-L X	BEAM M h	BEAM M X		
SPAN 4	1	2	7'-6"	2	22'-0"	2	9'-0"		
	2	--	--	2	12'-6"	--	--		
	3	--	--	6	6'-0"	--	--		
		BEAM A h	BEAM A X	BEAMS B-L h	BEAMS B-L X	BEAM M h	BEAM M X		
SPAN 5	1	2	27'-6"	2	24'-0"	2	29'-0"		
	2	2	15'-0"	2	12'-0"	2	15'-6"		
	3	4	6'-0"	6	6'-6"	6	6'-6"		
		BEAM A h	BEAM A X	BEAMS B-G h	BEAMS B-G X	BEAM H h	BEAM H X	BEAMS J-K h	BEAMS J-K X
SPAN 6	1	2	44'-0"	2	40'-6"	2	36'-0"	2	42'-6"
	2	4	29'-0"	4	27'-6"	4	24'-0"	4	28'-6"
	3	8	12'-0"	8	12'-0"	8	11'-6"	8	12'-0"
		BEAMS L-M h	BEAMS L-M X						
	1	2	50'-0"						
	2	4	32'-0"						
	3	10	13'-6"						

FINAL ROW PLAN REVISIONS (SUBMITTAL DATE:)							
NO.	DATE	AUTH	DESCRIPTION	NO.	DATE	AUTH	DESCRIPTION

MDOT Michigan Department of Transportation

NO SCALE

DRAWN BY: J.GALLOWAY	DATE: 04/19/18	CS: R01-3 OF 38101	PRESTRESSED CONCRETE 1800 GIRDER DETAILS
CHK'D BY: C.MAYORAL CORR BY: DLW	DESIGN UNIT: OCCHIUTO	JN: 115861A	
FILE: r01-3 38101 prest001.dgn	TSC: JACKSON		

DRAWING	SHEET
R01	SECT 2

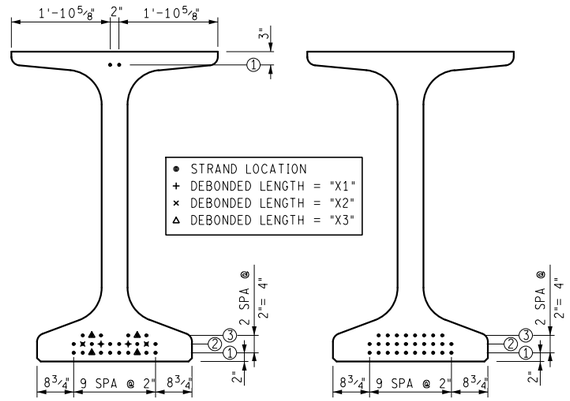

AT BEAM ENDS AT MIDSPAN

STRAND LOCATIONS - SPAN 1, BEAM A

SEE "BOND BREAKERS" TABLE FOR DEBONDING LENGTHS

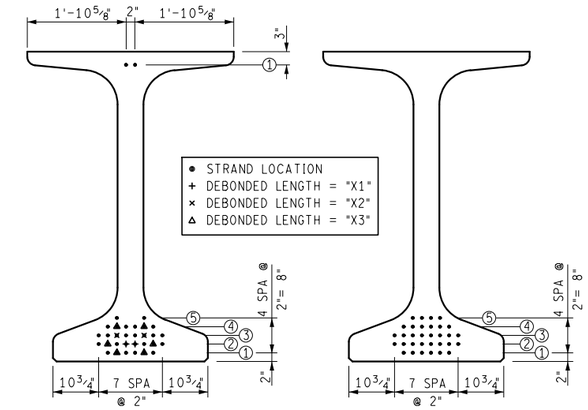

AT BEAM ENDS AT MIDSPAN

STRAND LOCATIONS - SPAN 1, BEAMS B-G

SEE "BOND BREAKERS" TABLE FOR DEBONDING LENGTHS

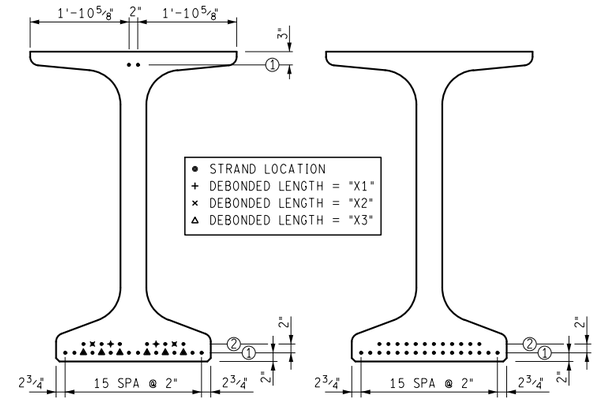

AT BEAM ENDS AT MIDSPAN

STRAND LOCATIONS - SPAN 1, BEAM H

SEE "BOND BREAKERS" TABLE FOR DEBONDING LENGTHS

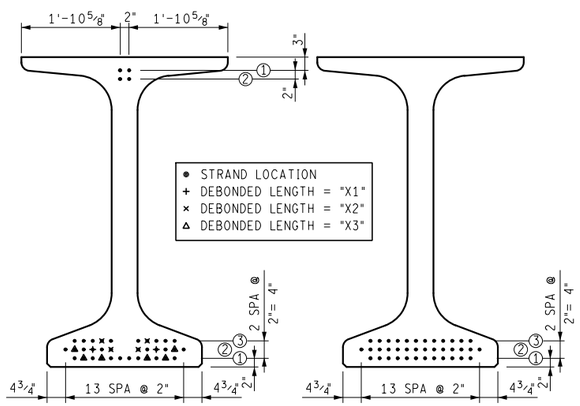

AT BEAM ENDS AT MIDSPAN

STRAND LOCATIONS - SPAN 2, BEAM A

SEE "BOND BREAKERS" TABLE FOR DEBONDING LENGTHS

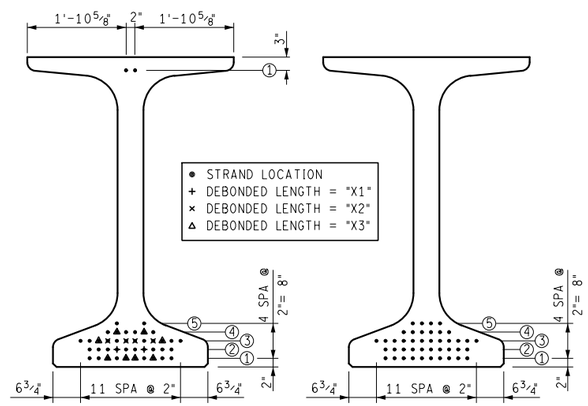

AT BEAM ENDS AT MIDSPAN

STRAND LOCATIONS - SPAN 2, BEAMS B-G

SEE "BOND BREAKERS" TABLE FOR DEBONDING LENGTHS

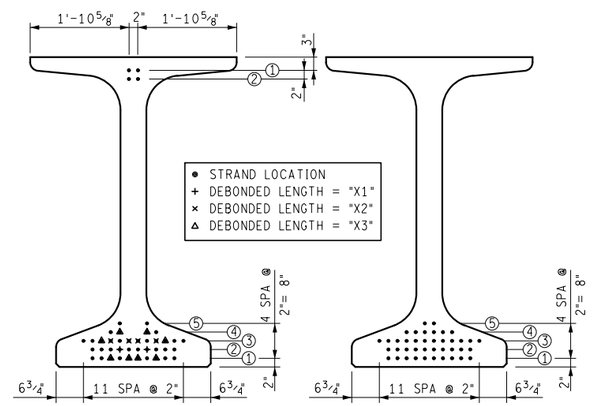

AT BEAM ENDS AT MIDSPAN

STRAND LOCATIONS - SPAN 2, BEAM H

SEE "BOND BREAKERS" TABLE FOR DEBONDING LENGTHS

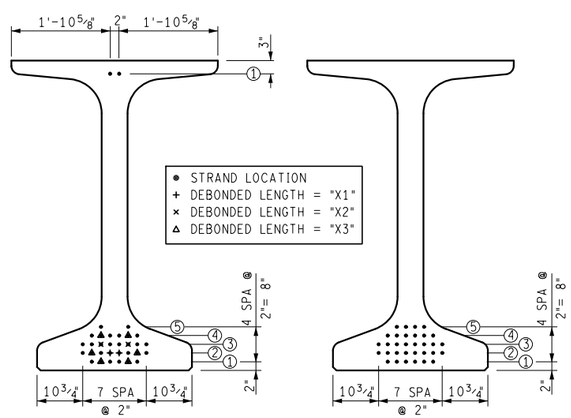

AT BEAM ENDS AT MIDSPAN

STRAND LOCATIONS - SPAN 3, BEAM A

SEE "BOND BREAKERS" TABLE FOR DEBONDING LENGTHS

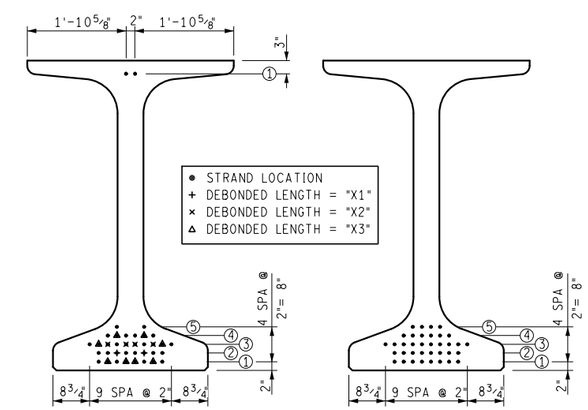

AT BEAM ENDS AT MIDSPAN

STRAND LOCATIONS - SPAN 3, BEAMS B-G

SEE "BOND BREAKERS" TABLE FOR DEBONDING LENGTHS

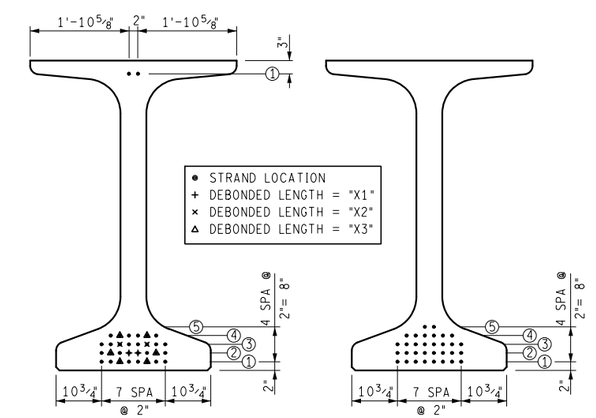

AT BEAM ENDS AT MIDSPAN

STRAND LOCATIONS - SPAN 3, BEAM H

SEE "BOND BREAKERS" TABLE FOR DEBONDING LENGTHS

FINAL ROW PLAN REVISIONS (SUBMITTAL DATE:)

NO.	DATE	AUTH	DESCRIPTION	NO.	DATE	AUTH	DESCRIPTION

MDOT Michigan Department of Transportation

NO SCALE

DRAWN BY: J.GALLOWAY	DATE: 04/12/18	CS: R01-3 OF 38101	PRESTRESSED CONCRETE 1800 GIRDER DETAILS
CHK'D BY: C.MAYORAL CORR BY: DLW	DESIGN UNIT: OCCHIUTO	JN: 115861A	
FILE: r01-3 38101 prest001.dgn	TSC: JACKSON		

DRAWING	SHEET
R01	SECT 2

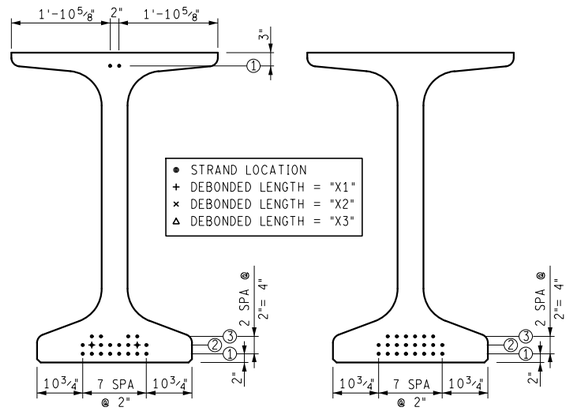

AT BEAM ENDS AT MIDSPAN

STRAND LOCATIONS - SPAN 4, BEAM A

SEE "BOND BREAKERS" TABLE FOR DEBONDING LENGTHS

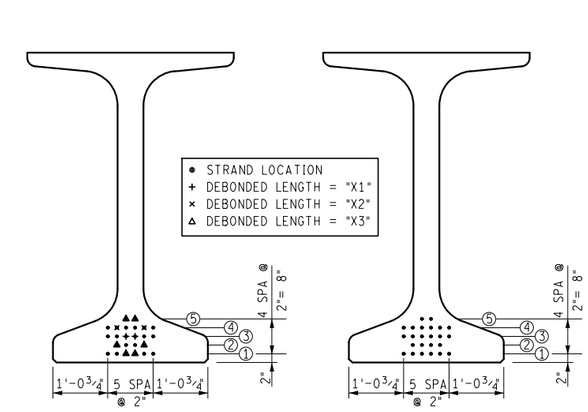

AT BEAM ENDS AT MIDSPAN

STRAND LOCATIONS - SPAN 4, BEAMS B-L

SEE "BOND BREAKERS" TABLE FOR DEBONDING LENGTHS

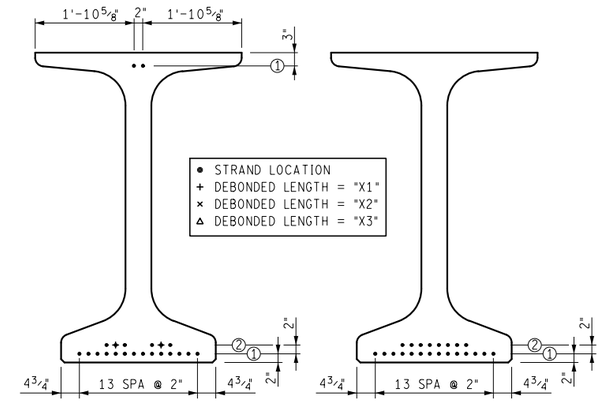

AT BEAM ENDS AT MIDSPAN

STRAND LOCATIONS - SPAN 4, BEAM M

SEE "BOND BREAKERS" TABLE FOR DEBONDING LENGTHS

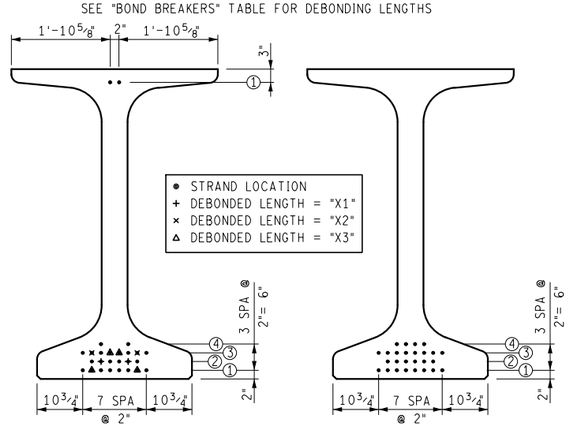

AT BEAM ENDS AT MIDSPAN

STRAND LOCATIONS - SPAN 5, BEAM A

SEE "BOND BREAKERS" TABLE FOR DEBONDING LENGTHS

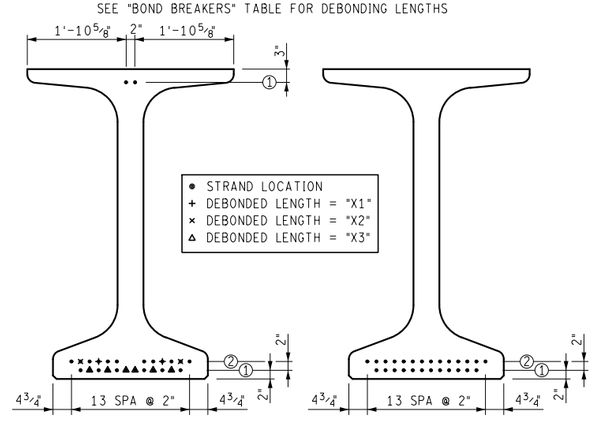

AT BEAM ENDS AT MIDSPAN

STRAND LOCATIONS - SPAN 5, BEAMS B-L

SEE "BOND BREAKERS" TABLE FOR DEBONDING LENGTHS

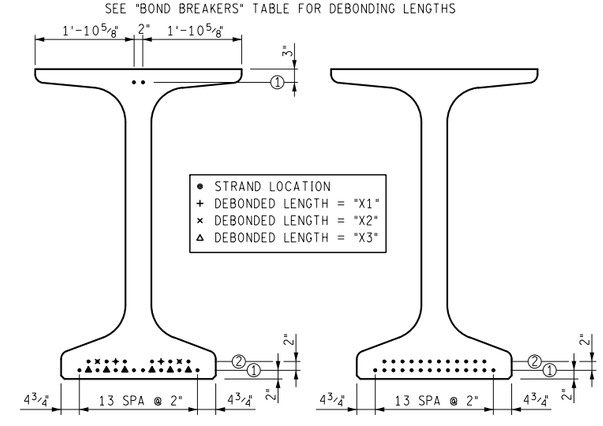

AT BEAM ENDS AT MIDSPAN

STRAND LOCATIONS - SPAN 5, BEAM M

SEE "BOND BREAKERS" TABLE FOR DEBONDING LENGTHS

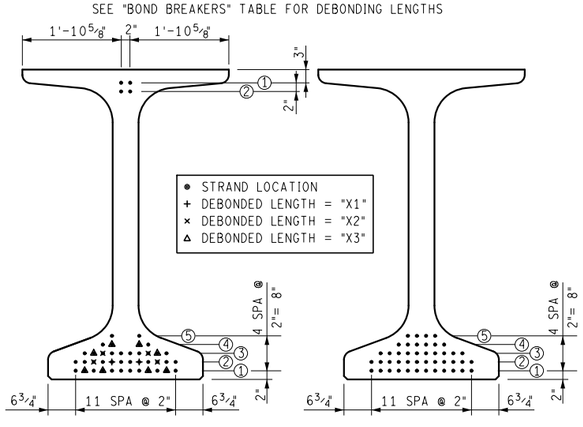

AT BEAM ENDS AT MIDSPAN

STRAND LOCATIONS - SPAN 6, BEAMS A

SEE "BOND BREAKERS" TABLE FOR DEBONDING LENGTHS

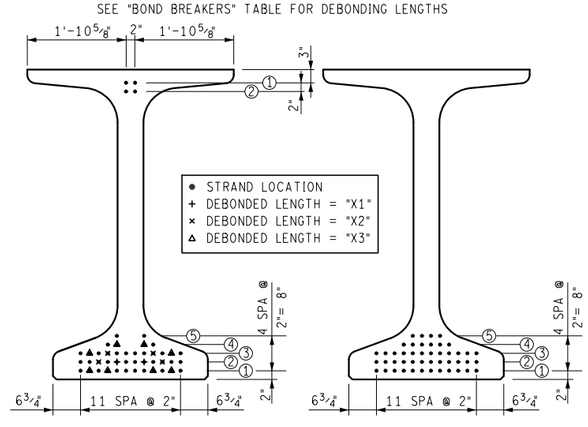

AT BEAM ENDS AT MIDSPAN

STRAND LOCATIONS - SPAN 6, BEAMS B-H

SEE "BOND BREAKERS" TABLE FOR DEBONDING LENGTHS

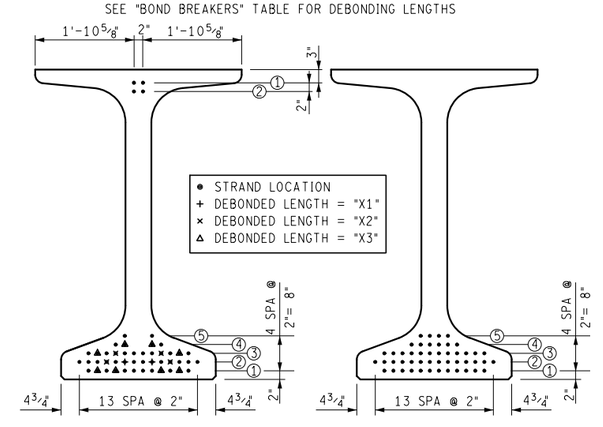

AT BEAM ENDS AT MIDSPAN

STRAND LOCATIONS - SPAN 6, BEAMS J-K

SEE "BOND BREAKERS" TABLE FOR DEBONDING LENGTHS

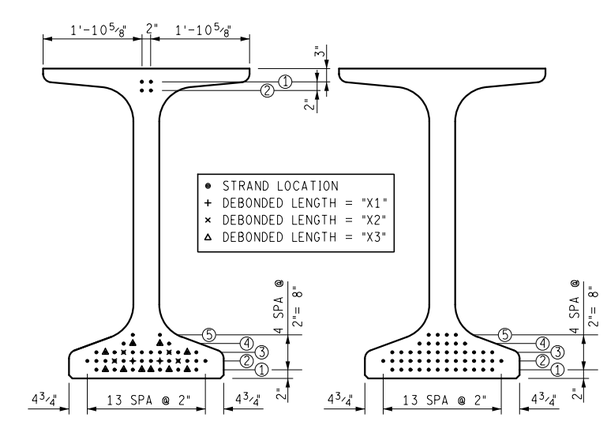

AT BEAM ENDS AT MIDSPAN

STRAND LOCATIONS - SPAN 6, BEAM L-M

SEE "BOND BREAKERS" TABLE FOR DEBONDING LENGTHS

FINAL ROW PLAN REVISIONS (SUBMITTAL DATE:)							
NO.	DATE	AUTH	DESCRIPTION	NO.	DATE	AUTH	DESCRIPTION

MDOT Michigan Department of Transportation

NO SCALE

DRAWN BY: J.GALLOWAY	DATE: 04/12/18	CS: R01-3 OF 38101	PRESTRESSED CONCRETE 1800 GIRDER DETAILS
CHK'D BY: C.MAYORAL CORR BY: DLW	DESIGN UNIT: OCCHIUTO	JN: 115861A	
FILE: r01-3 38101 prest001.dgn	TSC: JACKSON		

DRAWING	SHEET
R01	SECT 2

APPENDIX E
SUMMARY OF OTHER STATE HIGHWAY AGENCIES' DESIGN GUIDELINES AND SPECIFICATIONS

Design guidelines and specifications of states with similar climate and exposure conditions to Minnesota were reviewed and compared. Department of Transportation (DOT) websites were visited to find the relevant documents addressing the use of debonded strands in prestressed bridge girders. The following state DOTs are among those for which written design guidelines and specifications were reviewed and compared: Michigan (MDOT), Illinois (IDOT), Illinois Tollway, New York State (NYSDOT), North Dakota (NDDOT), Kansas (KDOT), Nebraska (NDOR), Wisconsin (WisDOT), South Dakota (SDDOT), Iowa (Iowa DOT), and Missouri (MoDOT). In addition to these states, MnDOT and AASHTO (2017) design specifications, as well as proposed design guidelines published in NCHRP Report 849 were reviewed and compared to those of the individual state DOTs.

For most states, written documents were found addressing each state's practice associated with debonding. Among the written documents reviewed included bridge design manuals (e.g., MDOT Bridge Design Manual), special provision sheets (e.g., IDOT Guide Bridge Special Provisions), technical memos (e.g., IDOT All Bridge Designers Memo 15.2), as well as standard detail sheets (e.g., MnDOT Bridge Details Manual Part II). These documents are referred to as "design guidelines" in this summary. Furthermore, standard construction specifications and fabrication manuals (e.g., IDOT Manual for Fabrication) were reviewed. These documents are referred to as "specifications" in this summary.

A few states did not address some of their practices associated with debonded strands in their written design guidelines or specifications that best reflect their current practice (i.e., KDOT, NDDOT, SDDOT, MoDOT). One state had written design guidelines that were slightly contrary to their current practice (NYSDOT). The NYSDOT Bridge Manual indicated draping was preferred over debonding, but survey responses indicated that debonding was preferred and is presently used more often. In any cases of contradiction between the written design guidelines or specifications, and survey findings, the survey findings are considered to be the most accurate reflection of current practice. The findings presented here are based on reviewing both written design guidelines as well as specifications. These findings are summarized in Table 1 and further discussed below.

DOT design guidelines on debonding patterns/limits

Based on the review of design guidelines, eight out of eleven highway agencies stated debonding was allowed within their state. Three states did not comment on the use of debonded strands in their design guidelines (i.e., NDDOT, SDDOT, Iowa DOT). For all DOTs currently utilizing debonded strands, a few common trends were found to be consistent in all of their design guidelines.

The pattern in which debonded strands are placed in girder sections were found to be detailed similarly by a number of highway agencies (i.e., MDOT, IDOT, Illinois Tollway, NYSDOT, NDOR, WisDOT) and also consistent with AASHTO (2017) LRFD design specifications:

- Not more than 40% of total strands may be debonded in any row
- Not more than to 40% of debonded strands or 4, whichever is greater, may be terminated at the same section.
- Debonding of innermost strands is not allowed
- Debonding of outermost strands is not allowed

There were a few differences observed among state DOTs however, regarding the percentage of debonding allowed out of the total number of strands in a given section.

- A number of states limited debonding to the AASHTO (2017) limit of 25% (i.e., IDOT, Illinois Tollway, NYSDOT, NDDOT, KDOT, SDDOT).
- A few other states exceeded the AASHTO (2017) limits, such as MDOT and NDOR. NDOR allows up to 35% debonding in certain situations while MDOT allows up to 40% of debonded strands in all of their girder sections.

Recent research findings by NCHRP (Research Report 849) suggest that a revised limit of 60% debonding should be adopted by AASHTO.

In the past, NYSDOT had no maximum limit on the percentage of strands that may be debonded and have had cases where 50% of strands were debonded. Current design guidelines, however, limit the debonded strands to 25%.

MnDOT specifications currently do not comment on debonding limits as it relies solely on the use of draped strands in reducing end stresses.

Methods of sheathing/corrosion protection

One of the categories reviewed in the design guidelines and specifications was the method highway agencies used to debond the strands, or in other terms, prevent the prestressing strands from forming a bond with the concrete. Three states specified the use of flexible split-sheathing tube (i.e., NYSDOT, NDOR, MoDOT) and two other states specified the use of rigid/ preformed sheathing tube (i.e., IDOT, Illinois Tollway). Five states did not address sheathing methods within their design guidelines or specifications, but four of those states have confirmed through survey responses that current practice was to use flexible split-sheathing or a double split-sheathing tube method (i.e., MDOT, NDDOT, KDOT, WisDOT).

Thus, flexible split-sheathing was used far more frequently than rigid/preformed sheathing tube to debond prestress strands. Indeed, local producers have found flexible split-sheathing to be easier to use in fabrication than rigid sheathing tube which explains the overwhelming use of split-sheathing by state DOTs. On the contrary, a research report by Burgueno and Sun (2011) found that "debonded strands with flexible sheathing can lead to cracking in concrete along the entire debonded length due to the radial expansion that it experiences as a consequence of the reduced bond strength." A lack of bond in the debonded region maximizes strand dilation or radial expansion of the strand, and could cause concrete damage if there is tight contact between the concrete and strand. Thus, oversized rigid sheathing can avoid damage from the dilation of debonded strands and was subsequently recommended by this research report (Burgueno and Sun 2011).

The research also states that as long as there is enough room around the strand for dilation, the stress level in the debonded region can be reduced. A few state DOTs specify flexible split-sheathing diameters that exceed the maximum outside diameter of the strand by 0.025 to 0.14 inches (e.g., NDOR).

Additionally, methods of corrosion protection were reviewed to determine if any special precautions were taken to protect debonded strands from corrosion or mitigate chloride ingress through the sheathing tube. Neither state DOT design guidelines nor specifications were found indicating any special type of corrosion protection methods used for the case of debonded strands. The same method of corrosion protection applied to all strands regardless of debonding and type of sheathing tubes. The different types of material utilized by states for corrosion protection are listed in Table E-1.

Although MnDOT does not use debonded strands at the present time, MnDOT design guidelines indicate that beam ends are to be covered with sealant as per MnDOT's approved products list in order to protect prestressed strands from corrosion.

Transverse reinforcement in end zone

Regarding the use of transverse reinforcement in the end zone, a few similar but slightly different methods are used by state DOTs as can be observed from the summary in Table E-1. Per AASHTO (2017) design specifications, there is Splitting Resistance (Pr) reinforcement that must be provided to resist at least four percent of the prestressing force at transfer. AASHTO further comments this splitting resistance must be provided within a distance of h/4, where h is the height of the beam.

Method 1

Some states simply fulfill the AASHTO (2017) requirement for splitting resistance by providing anchorage zone reinforcement to resist four percent of the total prestressing force and place it within h/4 of the end of the girder (i.e., NDOR, MoDOT).

Method 2

Other states use a modified distribution of the splitting resistance reinforcement and have credited this distribution with recommendations made by various research reports (IDOT, Illinois Tollway). This modified procedure states that 50% of the required reinforcement should be placed within a distance of h/8 from the end of the beam. The remainder of the steel should be placed between h/8 and h/2 from the end. A research report by Hasenkamp, Badie, Tuan, and Tadros (2008) on end zone cracking suggests that if most of the bursting reinforcement is placed in the end h/8, it would have the most effective crack control with the least amount of steel.

The referenced research (Hasenkamp et al. 2008) further suggests that the remainder of the end zone reinforcement that is provided between h/8 and h/2 from the end is not in addition to the vertical shear reinforcement. The findings of Hasenkamp et al. are also consistent with the findings of French et al. (2011) that this reinforcement should be placed as close to the end of the member as possible.

Method 3

IDOT has further developed a bursting steel detail which is also based on placing 50% of the splitting resistance reinforcement within h/8 from the beam end. As previously reported in the survey of local producers, the bursting steel detail used by IDOT consists of a steel plate at the bottom of the girder with 1 in. threaded rods running vertically upward through the girder that are attached with nuts to another plate at the top of the girder.
MnDOT design guidelines most closely adhere to the transverse reinforcement requirements of Method 1. MnDOT specifies that the required splitting reinforcement be provided within h/4. However, in an effort to facilitate concrete placement by providing a larger reinforcement spacing, it is allowed to place the splitting reinforcement beyond h/4.

Overview of state design guidelines and specifications

Based on the review of design guidelines and specifications, some common trends were observed such as the use of split-sheathing tube as the most commonly used method of

sheathing. The debonding patterns of states utilizing debonding are also consistent with those of AASHTO (2017) standards.

There are subtle differences in the design guidelines of state highway agencies such as the placement and distribution of transverse or splitting resistance reinforcement in the end zone of prestressed girders. There are also differences in the allowable limits to the overall debonding percentage in girder sections. Most state DOTs elect to specify a more conservative limit of 25% (consistent with AASHTO (2017) specifications) while at least one state DOT allows debonding up to 40% of the strands. NCHRP Report 849 recommends a higher debonding percentage of up to 60%.

Table E-1 - Summary of design guidelines and specifications on debonded prestressed concrete bridge girders

			State Highway Agencies			
	AASHTO LRFD	**NCHRP Report 849**	**MDOT** **"Michigan"**	**NDOR** **"Nebraska"**	**IOWA DOT** **"Iowa"**	**IDOT** **"Illinois"**
Debonding vs. Draping Preference	N/A	N/A	Debonding is preferred; Draped strands shall be avoided where possible. (MDOT 7.02.18)	Draping is allowed. Debonding should be the last option for designers. (BOPP 3.3.1)	Deflected (draped) strands are used primarily. The number of deflected strands is limited to 25% - 33% of total strands. (BDM 5.4.1.4.1.5)	Both draped and debonded strands are used. However, there is a preference towards draped strands (FM 2.2.8-10)
Amount/Percentage(s) of Debonding Allowed	Debonding 'should' be limited to 25% of total strands, and not more than 40% in a row. Not more than 40% or 4, whichever is greater, can be terminated at any section. Debonding shall be symmetrically distributed about member. (AASHTO LRFD 5.9.4.3.3)	60% of total strands may be debonded, and not more than 80% in any row within the bottom flange. Not more than 50% of bottom row strands can be debonded. Not more than 40% or 4, whichever is greater, should have debonding terminated at any section. (Section 4.2)	40% of total strands may be debonded. Amounts of debonding more than 40% require the use of extra draped strands. Less than 30 ft girder span need not be debonded. (MDOT 7.02.18)	Debonded strands shall be specified in accordance with AASHTO LRFD specifications. (BOPP 3.3.1)	N/A	Debonded strands utilized according to AASHTO LRFD specifications. (ABD Memo 15.2)
Debonding of outer strands in any row	Not allowed. Exterior strands shall be bonded. (AASHTO LRFD 5.9.4.3.3)	Not allowed. "Outermost strands located within the full-width section of the flange shall remain bonded." (Section 4.2) Figure 4.1 illustrates the bottom corner strands shall be bonded.	Wherever possible, debonding shall not be placed on peripheral strands. If placing strands in the bottom row, they should be placed on every third strand with the corner strands being bonded. (MDOT 7.02.18)	Not allowed. Exterior and adjacent strands shall be bonded. (BOPP 3.3.1)	N/A	Not allowed. The designer shall not debond the outermost or innermost strands in a row, nor two adjacent strands (ABD Memo 15.2 Figure 3)
Debonding of inner strands in any row	N/A	Not allowed. "Strands in the flange within the web width should remain bonded." (Section 4.2)	N/A	N/A	N/A	Not allowed. The designer shall not debond the outermost or innermost strands in a row, nor two adjacent strands (ABD Memo 15.2 Figure 3)
Maximum debonding length	N/A	N/A	N/A	Limit to span/10. (BOPP 3.3.1.2.H)	N/A	N/A
Means of Strand Corrosion Protection	N/A	N/A	Seal beam ends with an elastomeric sealer - a rubberized coating. (MDOT 7.03.11A)	Thoroughly seal the ends of the sheathing encasing the strand with waterproof tape before placing the concrete to prevent the intrusion of water or cement paste. (BOPP 5.G15)	N/A	After strands are fully tensioned, the sheathing ends shall be sealed with suitable material, such as a silicone sealant. (FM 2.2.8-10)
Method of Sheathing	N/A	Flexible split-sheathing or rigid preformed tubes. (1.1)	Rigid monolithic polymer debonding material is used with an outside diameter of 0.725 inches and a wall thickness of 0.04 inches. The debonding material is closed tubing (longitudinal slits are prohibited). The ends of the rigid debonding material is sealed with duct tape or other materials to prevent the intrusion of cement paste or water within the debonded regions of the strand (MDOT Special Provisions).	Split or unsplit flexible polymer tubing with a minimum wall thickness of 0.025 in. Split sheathing must have a minimum overlap of 3/8 in; Have an inside diameter exceeding the maximum outside diameter of the strand by 0.025 to 0.14 inch. (BOPP 5.G15)	N/A	Debonding shall be achieved by wrapping the ends of the strands with sheathing. The sheathing shall be a flexible PVC closed, tubular type. (FM 2.2.8-10)
Transverse reinforcement requirements in conjunction with debonding	-- Minimum Transverse Reinforcement requirements must be satisfied per AASHTO LRFD sections 5.7.2.5 through 5.7.2.7: $A_s \geq 0.0316\,\lambda\sqrt{f'_c}\,\frac{b_v s}{f_y}$ (5.7.2.5-1) -- Splitting Resistance (Pr) provided by reinforcement at ends of pretensioned beams (within *h/4* from the end of member) shall not be less than than four percent of the total prestressing force at transfer (AASHTO LRFD 5.9.4.4.1): $P_r = f_y A_s$ (See Footnote 2)	-- Figure 4.3 in NCHRP Report shall be used to determine the required amount of tie reinforcement, where *t* is the tie force to be resisted (Section 4.3): $t = (V_u/\phi)(n_f/N_w)[x_p/(h_b - y_p) + (x_p - c_b)/y_p]$ where $c_b = (b_b/2)(1 - n_f/N_w)$ -- Reinforcement shall be distributed uniformly over length of the bearing plus a distance equal to *h/4*. (Section 4.3) -- Steel sole plate may be embedded at girder ends as a more practical option instead of confinement reinforcing detail. AASHTO LRFD articles on steel sole plates applicable. (Section 4.3)	-- To aid in stabilizing transverse reinforcement in the beam, a bar or strand shall be located in the bottom corners of the beam. Second row up for box beams and certain PCI beams. (MDOT 7.02.18) -- Sole plates (3/4 in. generally) are to be cast in all beams and shall be tilted as required when the calculated bevel exceeds 1%. (MDOT 7.02.18)	-- If debonding is to occur, additional U-shaped bars (G501) should be added to reduce the stress of lifting and handling girders. (BOPP 3.3.1) -- Anchorage zone reinforcement shall be able to resist at least 4% of the total prestressing force and be placed within *d/4* of the end of the girder. (BOPP 3.3.1) -- A third vertical web shear reinforcement mat may be placed in the anchorage zone. Mild steel reinforcing substitution is discouraged. (BOPP 3.3.1) (See footnote 2)	N/A	-- Per AASHTO specificiations, place required area of steel (4% of total prestressing force at transfer) within the AASHTO-defined splitting zone distance of h/4 where h is depth of beam. IDOT places 50% percent of the required steel at a distance of h/8 away from the beam end based on recommendations from various reports and researchers. (ABD Memo 15.2)
Longitudinal reinforcement requirements in conjunction with debonding	Longitudinal Reinforcement must satisfy: $A_{ps}f_{ps} + A_s f_y \geq \frac{\lvert M_u \rvert}{d_v \phi_f} + 0.5\frac{N_u}{\phi_c} + \left(\left\lvert \frac{V_u}{\phi_v} - V_p \right\rvert - 0.5V_s\right)\cot\theta$ (5.7.3.5-1) (See Footnote 2)	Debonding strands is not detrimental to prestressed girder performance provided the AASHTO LRFD requirements for longitudinal reinforcement to resist the additional tension due to shear are met (Section 4.1). Tensile force in prestressing reinforcement (A_{ps}*f_{ps}) shall exceed the tensile force of the nonprestressed reinforcement (A_s*f_s) at all sections. (Section 4.2)	N/A	The area of the longitudinal wire shall be at least 40% of the vertical. (BOPP 3.3.1)	In accordance with AASHTO LRFD specifications.	N/A
Draped reinforcement requirements in conjunction with debonding	N/A	N/A	Amounts of debonding more than 40% require the use of extra draped strands. (MDOT 7.02.18)	N/A	N/A	Minimize draped strands to 6 for safety and constructability. This is accomplished by permitting 4 draped strands and utilizing debonded strands. (ABD Memo 15.2)
Other Requirements						
Reference Year and Edition	AASHTO LRFD 8th Edition, September 2017	NCHRP Research Report 849, 2017	MDOT Bridge Design Manual, Volume 5 2018 Standard Specifications for Construction, 2012 MDOT Special Provision for Strand Debonding, February 2012 (MDOT)	BOPP Manual, December 2016 Design Aids of NU I-Girders Bridges, 2010 Debonding Prestressing Strands (Special Provisions), October 2017 (NDOR)	Bridge Design Manual (BDM), July 2018 (IOWA DOT)	IDOT Manual for Fabrication (FM), January 2017 IDOT All Bridge Designers (ABD) Memo 15.2 Standard Specifications for Roads and Bridge Construction, January 2016 Bridge Manual 2012 Guide Bridge Special Provisions, April 2018 (IDOT)

NOTES:

1) Design guidelines and specification documents referenced in the above table are those of the state agency labelled in that column, unless specification section contains "AASHTO LRFD," which refers to AASHTO LRFD Specifications - 8th Edition.

2) Transverse and Longitudinal reinforcement requirements are applicable in all situations whether strands are bonded or debonded.

Table E-1 Summary of design guidelines and specifications on debonded prestressed concrete bridge girders

	State Highway Agencies							
	Illinois Tollway "Illinois State Toll Highway Authority"	**WisDOT** "Wisconsin"	**KDOT** "Kansas"	**NDDOT** "North Dakota"	**SDDOT** "South Dakota"	**NYSDOT** "New York"	**MoDOT** "Missouri"	**MnDOT** "Minnesota"
Debonding vs. Draping Preference	Use of debonding to be considered, and must adhere to the restrictions listed in IDOT All Bridge Designer Memo 15.2, IDOT Manual for Fabrication of Precast Prestressed Products, and AASHTO LRFD specifications. (SDM 13.2) Use of draped strand given preference per IDOT policy.	Raised strand pattern given preference, followed by the use of draped strand pattern. Debonding strand pattern to be used sparingly. (WisDOT 19.3.3.12)	KDOT website indicates the prestressed concrete section of specifications are under development.	Partially and fully debonded strands are allowed. (NDDOT IV-02.08.09)	Harped strands are allowed. Debonded strands are not cited in specifications. (SDDOT 560.C.3)	Rearrangement of strand pattern given first preference, followed by the use of draped strand pattern for I-girders to avoid excessive end stresses. Debonded strands are the third option. (BM 9.5-1 through 9.5-3)	Harped strands are primarily used to keep girder stresses within allowable limits. For strand arrangement optimization, the same number of draped strands are used for all spans and debonding used where needed. (EPG 751.22.2.2)	Draped strands are used to reduce the initial required concrete strength f'ci. Straight strands to be used in place of draped strands whenever possible. Debonded strands are not cited in the LRFD bridge design manuals (BDM 5.4.3).
Amount/Percentage(s) of Debonding Allowed	Debonded strands meeting the requirements of AASHTO and IDOT used. (SDM 13.7.10-6)	40% in any row and 25% of total strands. Not more than 40% of the debonded strands or 4 strands, whichever is greater, shall have debonding terminated at any section. (WisDOT 19.3.3.12.3)	N/A	N/A	N/A	40% in any row, and 25% of total strands. The debonding pattern shall be symmetrical about the beam centerline. The spacing of debonded strands in a row shall be a minimum of 4 in. A maximum of four prestressing strand debond terminations are permitted at any given location in a unit. A minimum difference of 2'-0" is required between debond termination sections. Do not debond prestressing strands in units 1'-3" or less in depth. (BM 9.5-3)	N/A	N/A
Debonding of outer strands in any row	Not allowed. The designer shall not debond the outermost or innermost strands in a row, nor two adjacent strands (ABD Memo 15.2 Figure 3)	Not allowed. Exterior strands in each horizontal row shall be fully bonded for crack control purposes. (WisDOT 19.3.3.12.3)	N/A	N/A	N/A	Not allowed. The outermost prestressing strands in a row shall not be debonded. (BM 9.5-3f)	N/A	N/A
Debonding of inner strands in any row	Not allowed. The designer shall not debond the outermost or innermost strands in a row, nor two adjacent strands (ABD Memo 15.2 Figure 3)	N/A	N/A	N/A	N/A	N/A	N/A	N/A
Maximum debonding length	N/A	The length of debonding shall be such that all limit states are satisfied with consideration of the total developed resistance (transfer and development length) at any section being investigated. (WisDOT 19.3.3.12.3)	N/A	N/A	N/A	N/A	N/A	N/A
Means of Strand Corrosion Protection	After strands are fully tensioned, the sheathing ends shall be sealed with suitable material, such as a silicone sealant. (Fabrication Manual 2.2.8-10)	N/A	N/A	Use of water repellant and joint sealer, silicone	N/A	Prestressed concrete elements shall use corrosion inhibitor and penetrating silane sealer. (BM 9.16)	N/A	Per Figure 5.7.2.5, strands are cut flush with concrete and end painted with an approved gray epoxy except as noted.
Method of Sheathing	Debonding shall be achieved by wrapping the ends of the strands with sheathing. The sheathing shall be a flexible PVC closed, tubular type. (Fabrication Manual 2.2.8-10)	No sleeve material specified. (WisDOT 19.3.3.12.3)	N/A	N/A	N/A	Where debonding of prestressing steel is required, plastic sheathing (or spilt sheathing) shall be used. (PCCM 4.2)	Polyethylene plastic sleeve. (EPG 751.22.2.2)	N/A
Transverse reinforcement requirements in conjunction with debonding	-- Vertical stirrups are required at the ends of all prestressed beams to resist 6% of the total initial prestressing force at 18 ksi located within a distance of ¼ of the beam depth from the end of the beam. For 63 in. and 72 in. beams, the minimum stirrup reinforcement shall be 5 pairs of #6 bars. (SDM 13.2) (See footnote 2)	N/A	N/A	Reinforcing steel should be designed according to AASHTO specifications. (NDDOT IV-02.08.06)	N/A	Allowable stresses used during design shall comply with AASHTO LRFD Bridge Design Specificationswith NYSDOT "LRFD Blue Page" modifications. (BM 9.7)	-- Area of shear reinforcement shall not be less than (EPG 751.22.2.4): $A_v \geq 0.0316\left(\frac{b_w s}{f_y}\right)\sqrt{f'_c}$ -- The bursting resistance of anchorage zones provided by vertical reinforcement (i.e., B2 bars, WWF, G402 bars) in the ends of prestressed girders at the service limit state shall be taken as: (EPG 751.22.2.4): $P_r = f_s A_s \geq 0.04 F_{po}$ (See Footnote 2)	-- Splitting reinforcement steel is provided to resist 4% of prestress force to prevent cracking at beam ends. This steel is placed within a distance h/4 from the beam end when possible, or beyond h/4 at a spacing of 2 -1/2 or 3 inches depending on the beam section. 2-1/2 inches is used for sections 36" or less, and 3 inches for all other beam sections. --Confinement reinforcement - "G403E and G507E bars will be placed at a maximum spacing of 6 inches out to 1.5d from the ends of the beam. For simplicity in detailing and ease of tying the reinforcement, space the vertical shear reinforcement with the confinement reinforcement in this area (BDM 5.10.10.2)." The size of confinement reinforcement bars have been updated to G303E and G307E per Bridge Details Manual Part II. (See footnote 2)
Longitudinal reinforcement requirements in conjunction with debonding	N/A	Longitudinal reinforcement must satisfy AASHTO LRFD requirements (WisDOT 19.3.3.16).	N/A	Reinforcing steel should be designed according to AASHTO specifications. (NDDOT IV-02.08.06)	N/A	Allowable stresses used during design shall comply with AASHTO LRFD Bridge Design Specificationswith NYSDOT "LRFD Blue Page" modifications. (BM 9.7)	N/A	Longitudinal reinforcement requirements are checked at two locations to satisfy AASHTO article 5.7.3.5. Longitudinal reinfocement is checked for adequacy from the inside edge of bearing at the end supports out to a distance dv, and at dv (BDM 5.8.3.5). (See footnote 2)
Draped reinforcement requirements in conjunction with debonding	Minimize draped strands to 6 for safety and constructability. This is accomplished by permitting 4 draped strands and utilizing debonded strands. (ABD Memo 15.2)	N/A	N/A	N/A	N/A	Combination of debonding and draping can be used in beams that allow for draping (ie Bulb-Tee and I-Beams). (BM 9.5-4)	N/A	N/A
Other Requirements								
Reference Year and Edition	Illinois Tollway Structure Design Manual, March 2017 IDOT All Bridge Designers (ABD) Memo 15.2 Supplemental Specification to the IDOT Standard Specifications, April 2016 (Illinois Tollway)	WisDOT Bridge Manual, January 2018 (WisDOT)	N/A (KDOT)	NDDOT Design Manual, January 2018 (NDDOT)	SDDOT Standard Specifications for Roads and Bridges, 2015 2018 Structures Construction Manual (SDDOT)	NYSDOT Bridge Manual (BM), August 2017 NYSDOT Prestressed Concrete Construction Manual (PCCM), April 2017 (NYSDOT)	Engineering Policy Guide (EPG), October 2017 Missouri Standard Specifications for Highway Construction, 2018 (MoDOT)	LRFD Bridge Design Manual (BDM), September 2018 Bridge Details Manual Part II (BDM Part II), November 2018 (MnDOT)

NOTES:

1) Design guidelines and specification documents referenced in the above table are those of the state agency labelled in that column, unless specification section contains "AASHTO LRFD," which refers to AASHTO LRFD Specifications - 8th Edition.

2) Transverse and Longitudinal reinforcement requirements are applicable in all situations whether strands are bonded or debonded.

APPENDIX F
SUMMARY OF RECOMMENDATIONS

Based on the findings of literature reviews and surveys, recommendations for the implementation of debonded prestressing strands are provided to the Minnesota Department of Transportation. This summary serves as commentary to the draft design guidelines that follow. In addition, potential material specifications and procedures for protecting debonded strands from corrosion are presented.

Debonding Limits

The current AASHTO (2017) LRFD Bridge Design Specifications limit debonded strands to 25% of total number of strands and reference experimental research performed by Shahawy et al. (1993). This limit resulted from inadequate shear capacity of test girders in which 40% of strands were debonded. The test girders in this experiment were designed using 1989 AASHTO specifications. Since then, AASHTO guidelines have been modified to include a check for the tensile capacity of the longitudinal reinforcement. This reinforcement contributes to the shear capacity of members by serving as a tension tie. It was confirmed in NCHRP Report 849 (Shahrooz et al. 2017) that the debonded girders tested by Shahawy et al. (1993) did not meet the longitudinal reinforcement requirement of AASHTO (2017) LRFD Article 5.7.3.5. Thus, limiting debonding to 25% does not appear to be justified if the current AASHTO longitudinal reinforcement requirements are satisfied.

Shahrooz et al. (2017) suggests that debonded strands should be permitted up to 60% of total strands based on experimental results, given that sufficient steel is provided to satisfy longitudinal reinforcement requirements.

Other literature such as Barnes et al. (1999) researching the "Development Length of 0.6-Inch Prestressing Strand in Standard I-Shaped Pretensioned Girders" was reviewed. A variety of debonding percentages were evaluated and tested for their pull-out capacities to study the anchorage behavior of debonded strands. This research concluded that up to 75% debonding may be used under two conditions. Bond slippage must be prevented near the transfer length of the debonded strands, and ACI/AASHTO rules for terminating tensile steel are applied to the bonded length of the prestressing strand (i.e., currently AASHTO Article 5.10.8.1.2). The relevant provisions in AASHTO (2017) Article 5.10.8.1.2 are also now supplemented by AASHTO (2017) Article 5.7.3.5 on longitudinal reinforcement requirements. The report further states that bond slippage can be avoided by preventing cracking inside the transfer length and within $20d_b$ of the transfer length of the debonded strands (where d_b is the diameter of strand). Formulas and expressions were provided limiting tensile stresses in the extreme fiber (edge) of the girder under ultimate loading such that cracking is prevented in this region and thus, ensure the girder achieves its ultimate capacity without bond slippage.

Barnes et al. (1999) took a different research approach than Shahrooz et al. (2017) by studying the bond capacity and development length associated with fully bonded as well as partially debonded strands. No information was presented in this research on the use of mild longitudinal steel (i.e., hairpins) to contribute to shear capacity by serving as a tension tie, nor the shear capacity reduction associated with debonded strands. This research that investigated development lengths and bond capacities through pull-out testing is not believed to be sufficient to justify the use of higher levels of debonding (i.e., 75%).

The research carried out by Barnes et al. (1999) was sponsored in part by the Texas Department of Transportation (TxDOT). TxDOT currently allows the use of debonded strands up to 75% in all of their standard beam designs. TxDOT utilizes longitudinal mild steel (i.e., hairpins) in all of their standard I-beam designs. This agency was not surveyed as part of this project and so no information was gathered regarding the reasons for the use of mild steel or how they determine the quantity used in a section.

However, TxDOT's successful practice with 75% debonding combined with their use of mild longitudinal steel further reinforces the design approach taken by NCHRP Report 849, as well as the work of other researchers (Ross 2012). These authors reported that it is more rational to limit debonding according to the total number of bonded strands required to provide the necessary end region longitudinal reinforcement requirement or by using additional mild longitudinal reinforcement in lieu of the current AASHTO (2017) limitations on debonding due to inadequate shear capacity.

The equations and formulas presented by Barnes et al. (1999) to ensure bond slippage is prevented may not be required when debonding is limited to 60%. Experimental testing by Shahrooz et al. (2017) on girders with up to 60% debonding confirmed that adequate bond capacity was achieved, and strand slippage was not an issue when debonded strands were used up to 60%. The debonding patterns and termination locations recommended by AASHTO and Shahrooz et al. (2017) must also be followed in order to ensure there is adequate bond capacity. By using staggered debonding (e.g., 3 ft increments), the bond performance of strands was improved whereas concurrent debonding can lead to bond failures (Russell et al. 1994).

Recommendation on Debonding Limit

Although experimental research has indicated that higher percentages of debonded strands (i.e., 60%) are not detrimental to the immediate strength and performance of prestressed girders, higher debonding percentages create additional voids (or openings) between the strands and sheathing. If not sealed properly or if sheathing methods are ineffective, this may create additional opportunities for chloride ingress inside the sheathing. This is one of MnDOT's

stated concerns with debonded strands. Saltwater ingress inside the sheathing may lead to corrosion of prestressing strands, which could be detrimental to the long-term strength and durability of girders.

In search of an optimal debonding percentage that can achieve substantial end stress reduction while reducing the risk of corrosion, research by Okumus and Oliva (2014) was reviewed. These authors suggested that the least amount of debonding that can satisfy end stresses should be used. Based on a limited numerical study of 12 girders with various debonding ratios, Okumus and Oliva observed that the pattern of debonding was more important than the number of strands debonded in controlling end cracks. For example, these authors observed strains causing Y cracks were reduced if the interior strands within the web width remained bonded. They also noted that "the bonded and unbonded strands in the bottom flange of the girder should be uniformly spaced across the flange rather than grouped."

Based on MnDOT's previous design guidelines not allowing debonded strands and stated concerns with corrosion of prestressing steel, it is recommended that incremental debonding limits be used, starting with 40% debonding of the total number of strands. This initial amount was selected in search of a balance between achieving substantial reduction in end stresses, while reducing the number of voids created by debonding that could be susceptible to chloride ingress. This also allows MnDOT to start at a comfortable debonding percentage before going to the higher debonding percentages. Upon successful implementation and monitoring of the field performance of the corrosion protection methods used on girders with 40% debonding, higher debonding percentages may be permitted (i.e., 45%, 50%, 55%) up to 60% debonding, as was found to be an acceptable limit through experimental research.

The proposed initial debonding limit further leads to practicality in design by reducing the likelihood of needing additional mild longitudinal steel to satisfy longitudinal reinforcement requirements, where highly prestressed girders may not have the capacity to accommodate this additional steel.

Ultimately, the recommended initial debonding limit of 40% was determined based on the findings of the literature review, as well as the survey of state highway agencies with a similar climate to Minnesota where debonding has been used for a range of periods from three years (e.g., IDOT) to over 40 years of experience with debonding (e.g., MDOT).

The effectiveness of corrosion protection methods currently available in the industry also played a role in the recommended debonding limit due to potential concerns with pop out of the sealing material (i.e. caulk) that is used to protect the debonded strands.

Recommendation on corrosion protection method

A few different methods of protecting debonded strands from corrosion were identified from the survey of other state DOTs and review of their construction specifications, as well as review of design guidelines and procedures in the various state design manuals. These methods of corrosion protection include treating the ends of the debonded strands with silicone sealant (e.g., caulk material) or an asphaltic material in order to mitigate the entrance of de-icing agents through the voids between the sheathing and strand. The girder ends are also treated with epoxy coating on the exposed strands or painting the end few feet of girders (e.g., end and side surfaces) to prevent water seepage through the concrete.

It is recommended that silicone sealants be used to protect debonded strands. Sealing strand ends with a silicone sealant was found to be the most common method of corrosion protection used by highway agencies to seal the voids between strands and sheathing material. Silicone sealants, or other forms of elastomeric sealers, are commonly used in the construction industry to seal openings and joints. Silicone sealants remain durable and flexible over extreme temperatures. Five of the ten state highway agencies surveyed in this research that use debonded strands specify this type of material for the protection of debonded strands (i.e., MDOT, IDOT, Illinois Tollway, NYSDOT, NDDOT). Two different methods of applying silicone sealants at beam ends are used. The method that was chosen to be included in the MnDOT draft design guidelines was to apply the silicone sealant on the exposed strand ends to cover both the strand and sheathing. This method is similar to IDOT's current practice and is shown in Figure F-1.

Figure F-1: Exposed strand ends treated with silicone sealant (Photo courtesy of IDOT)

Alternatively, the silicone sealant may be applied at the end of the girder on the voids between strands and sheathing. This method is used by SDDOT and SCDOT, and is different from IDOT's method where the sealant is applied over the end of the strand and sheathing. The following note is an example of SCDOT's corrosion protection method which is documented on their standard beam detail sheets.

From SCDOT's standard beam detail sheets:

> Within 48 hours of detensioning, seal the openings between the strands and the sheathing . Use an approved sealant that is made of either epoxy or silicone. If silicone sealant is provided, use a low modulus silicone sealant that is white in color.

One of the drawbacks of this method (SDDOT and SCDOT's method) is that fabricators have observed pop out of the caulk used to seal the voids between the strands and sheathing.

It is recommended to use a silicone sealant with a low modulus of elasticity to gain advantages associated with expansion and contraction abilities of the material and to help counteract the risks of pop out. Nonetheless, care should be taken when applying silicone sealants. They should be inspected to ensure strands remain sealed prior to shipment of girders.

Other available methods of corrosion protection include treating the ends of debonded strands with an asphaltic material. This method is used by MDOT at a minimum to protect debonded strands from corrosion in addition to using an elastomeric sealer to seal the beam ends. The Illinois Tollway also identified grouting as an option for protecting strands from corrosion, in addition to silicone sealants. The Illinois Tollway did not indicate how this grouting was applied to the girder. It is assumed that this grouting is applied on the end surface of the debonded strands.

Other agencies such as KDOT, WisDOT, NDOR, and Iowa DOT identified coating on girder ends (e.g., end and side surfaces for a few feet) with the use of an approved epoxy coating as their corrosion protection methods. Coatings used by these states included use of an approved non-pigmented epoxy conforming to AASHTO M-235 Type III, Class B or C (WisDOT). These states, in addition to MoDOT and SDDOT, did not indicate any additional precautionary methods of corrosion protection for the case of debonded strands.

MnDOT currently utilizes approved sealants on exposed strand ends and painting on the end surfaces of beams to seal cracks and protect strands from corrosion. The recommended use of silicone sealant to protect debonded strands could eliminate the use of approved sealants (e.g., epoxy coating) applied on the exposed ends of strands if the silicone sealant is applied on both the strand and sheathing in accordance with Figure F-1. However, if the silicone sealant is applied only on the voids between the strand and sheathing, the use of silicone sealant would be in addition to MnDOT's current method of corrosion protection to apply approved sealants (e.g., epoxy coating) on the exposed ends of strands. Approved painting may also be applied on the end surfaces of the beam (i.e., ends and side surfaces) as a further precautionary measure to protect strands from corrosion.

As a primary layer of defense against corrosion, most of the states surveyed typically cast the ends of prestressed girders in end diaphragms. However, debonding is still used in the case where girders are not cast in end diaphragms by sealing the debonded strands. The recommended corrosion protection method should be utilized by sealing the debonded strands regardless of placing prestressed girders in integral abutments.

Recommendation on sheathing method

Three different methods of blanketing or sheathing the strands to obtain debonding were evaluated based on the experiences of fabricators and other state highway agencies, as well as research findings.

As observed in the findings of the survey of other state DOTs and review of design guidelines and specifications, flexible split-sheathing tubes are more widely used by state DOTs over preformed/rigid sheathing tube. Split-sheathing tube is preferred by fabricators due to the ease of fabrication in using this material over rigid sheathing tube.

Split-sheathing tube can achieve debonding with either a single split-sheathing tube or a double split-sheathing tube method, as shown in Figures F-2 and F-3, respectively. However, concern with single split-sheathing tube is that it may allow for concrete to seep through the sheathing and form a bond with the strand. Some states specify that the single sheathing be taped and tied to preclude the entry of concrete (e.g., WisDOT). This is not preferred as a tight contact between the debonded strand and flexible sheathing can lead to cracking along the debonded length due to radial expansion of strand at prestress release (Burgueno et al. 2011). Burgueno et al. (2011) concluded that oversized rigid sheathing should be used. However, fabricators surveyed have expressed concern with this solid/rigid sheathing tube because it is more difficult to work with and requires that the strands be fed through the tube during placement in the precasting bed.

Figure F-2: Single flexible split-sheathing (photo courtesy of ALP SUPPLY)

Figure F-3: Double flexible split-sheathing tube method

Thus, an oversized double split-sheathing tube method (shown in Figure F-3) is recommended as it should provide sufficient room for the strand to dilate, and prevents concrete entry by placing the slits/openings of the sheathings on opposite sides, all while maintaining ease of fabrication. This method of strand sheathing was currently used by MDOT, SDDOT, SCDOT, and NDOR.

The end of the sheathing tube inside the beam form must also be tied with suitable material (e.g., rebar tie wires) or taped with waterproof material to prevent concrete entry. Alternatively, Figure F-4 shows application of a silicone sealant within the beam forms between the sheathing and strand to prevent concrete entry. This alternative method is currently utilized by IDOT.

Figure F-4: Silicone sealant applied within the beam form (Photo courtesy of IDOT)

Strand Release Patterns

As found in the survey of other state DOTs and review of other state practices, most highway agencies rely on the experience and best practices of bridge fabricators regarding strand release patterns and detensioning of prestressed girders. Based on the survey and specifications review of the eleven different highway agencies with a similar climate to Minnesota, some state highway agencies generally require symmetry in the detensioning process (e.g., IDOT, NYSDOT, MDOT). In addition to symmetry, IDOT requires that strands be released using a slow release method as opposed to an abrupt cut. NYSDOT indicated there is no preference towards slow release or abrupt flame cutting, and that either option may be utilized.

Other states that did not indicate a preference on slow release and flame cutting methods, or a strand release pattern include KDOT, NDOR, MoDOT, Iowa DOT, and SDDOT. Highway agencies that specify a strand release pattern when an abrupt release of strands is used are NDDOT and WisDOT, respectively. NDDOT cuts the draped strands first and hold downs are removed prior to cutting the straight strands. NDDOT cuts strands from the top upper outside strands and works in toward the center until the entire row is cut. After that row is done, the row below it is cut until all strands are cut. As detailed in the summary of survey of state DOTs, WisDOT cuts the outermost strands first from the top, then the second outermost strands are cut working downwards and towards the interior of the girder.

County Materials observed that MnDOT's release pattern occasionally led to spalling when outermost strands were released last. MnDOT may want to consider funding an investigation related to studying the effect of the spalling relative to the spacing between prestressed girders on the casting bed. As one option at MnDOT's discretion, fabricators may be allowed to utilize their best practices or the WisDOT strand release pattern as requested by fabricators to minimize the risk of corner spalling.

Of the ten highway agencies that were surveyed and allow debonded strands, no indication or information was gathered regarding changes to their specification as a result of debonded strands, except for one state which adds a note on their beam sheets regarding the release of debonded strands (SDDOT).

The research team expanded the scope of their study beyond the eleven surveyed agencies in an effort to find information on release methodology specified with the use of debonded strands. Some standard detail sheets of additional state highway agencies that use debonded strands were perused. The South Carolina Department of Transportation (SCDOT), similar to SDDOT, adds a note on their standard beam sheets as an exception to the fabricator's method of strand release pattern when debonded strands are used. SCDOT and SDDOT notes state that

fully bonded strands are to be released first, and debonded strands are to be released after all fully bonded strands have been released. The debonded strands are to be released in sequence from shortest debonding length to maximum debonding length. The release symmetry that MnDOT requires will be maintained because strands with equal debonding lengths will be placed symmetrically about the beam vertical centerline. It is recommended that symmetry be maintained in the strand release pattern.

It is recommended that these exceptions (i.e., SCDOT and SDDOT notes on releasing fully bonded strands first) be incorporated into standard beam sheets or in the special provisions. There are no apparent risks associated with these notes, but they do offer a few benefits. One benefit is that because debonding cannot be placed in the outermost strands, the last few strands to be detensioned will likely be away from the surface. This will reduce the risks of spalling of corner concrete that fabricators reported as a result of releasing outermost strands last. The other benefit of incorporating this exception is that the final strands released (i.e., longest debonded strands) will introduce less restraining stress in the beam before they are cut because they have the longest debonded length. As the girder shortens, the reduction in length of the girders causes an increase in the free length of the uncut strands. Because the debonded strands have a longer free length than the bonded strands, the strains in the free length portion of those strands will be smaller than they would be in the bonded strands.

For those reasons, it is recommended that fabricators use the MnDOT strand release patterns method or their preferred method with the one exception listed above. That is, fully bonded strands should be released first, and debonded strands are to be released after all fully bonded strands have been released, in sequence from the strand with the shortest debonded length to the strand with the maximum debonded length.

Splitting Resistance Reinforcement

The use of debonded strands have been recommended to MnDOT as a feasible option to reduce end stresses and help control end cracking. This will not directly impact MnDOT's current guidelines for splitting resistance reinforcement. Splitting resistance shall be provided to resist four percent of the prestressing force, calculated using the area of bonded prestressing steel located within $h/4$ from the end of the beam (where h is the height of the beam). AASHTO (2017) Article 5.9.4.4.1 states "the resistance shall not be less than four percent of the total prestressing force at transfer," but does not explicitly state that only the area of bonded strands within $h/4$ are to be used to calculate the prestressing force. However, research projects on debonding determine four percent of the prestressing force based on only the area of strands bonded within $h/4$ from the end of the beam (e.g., NCHRP Report 849). This is

reasonable because the debonded strands do not add stress to the ends of the girder, which require the splitting resistance reinforcement.

Although debonded strands may get introduced into the beam beyond *h*/4, neither AASHTO (2017) Articles nor any other research article was found suggesting that splitting reinforcement be provided beyond h/4 where the debonded strands begin bonding within the beam. Current AASHTO (2017) Articles and research papers, however, specify that no more than 40% of debonded strands or four strands, whichever is greater, can be terminated at any section within the beam. Although not explicitly stated anywhere, it may be reasonably assumed that this strand pattern requirement will lead to relatively smaller splitting (or spalling) stresses developed at the debonding termination sections. Transverse reinforcement provided further along the beam will also act to resist these stresses. One research article supporting this assumption is an article by Okumus and Oliva (2014) stating that "If this provision is followed, the number of strands for which debonding is terminated is unlikely to be large enough to carry the cracking problem further into the girder." Thus, it is important to adhere to the AASHTO (2017) LRFD provision on limiting the number of debonded strands terminated at any section within the beam to 40% of debonded strands or four (4), whichever is greater.

Additionally, no changes are recommended to MnDOT's current design of splitting reinforcement as a result of implementing debonding. MnDOT adheres closely to AASHTO's (2017) LRFD requirement on splitting reinforcement, with the exception that this reinforcement may be placed beyond *h*/4 in an effort to provide realistic spacing to place concrete in heavily reinforced sections.

Although no changes are recommended for splitting reinforcement as a result of debonding, there are other splitting reinforcement methods available that could provide advantages to MnDOT over its current method. It was reported in the review of design guidelines that if most of the bursting reinforcement is placed in the end *h*/8, it would have the most effective crack control with the least amount of steel (Hasenkamp et al. 2008). This conclusion also aligns with the research findings of French et al. (2011) that this reinforcement be placed as close to the end of the member as possible.

Per the findings of the survey of the other state DOTs and review of design guidelines, some states found placing most of the splitting resistance reinforcement closer to the end of the girder (i.e., 50% of the required reinforcement within *h*/8) as the most effective method for controlling end cracks in prestressed bridge girders.

The remainder of the required steel is placed within *h*/2 from the end of the beam. This steel is not in addition to the transverse reinforcement required for girders.

At MnDOT's discretion, this method (i.e., placing 50% of the required reinforcement within *h*/8) may be considered as an alternative to the current MnDOT method where the required splitting resistance is placed within *h*/4. The benefit is that the amount of steel may be reduced in MnDOT's heavily reinforced sections. This method allows for greater spacing for the reinforcement placed between *h*/8 and *h*/2, and the reinforcement placed between *h*/8 and *h*/2 is not in addition to shear reinforcement requirements. However, the same amount of splitting reinforcement is required up to a distance *h*/8 from the end of the girder as when all of the required splitting reinforcement is placed within *h*/4. Thus, if this method is to be utilized, it must be further checked on a beam by beam case, whether the required 50% of steel can be placed within *h*/8 at MnDOT's required minimum center to center spacing of 2.5 in. or 3 in. depending on the selected standard beam section.

Confinement Reinforcement

Debonded strands will not impact MnDOT's current standards regarding confinement reinforcement provided near the girder ends for a distance of 1.5*d*, where *d* is the overall depth of girder. Review of other state specifications has also confirmed that the use of debonded strands does not affect their confinement reinforcement requirements. All state DOTs surveyed that allow debonding, except for one state, continue to provide confinement reinforcement for a distance of 1.5*d* whether or not debonding is used. These states, however, also use an embedded steel plate at the end of girders, of which their significance is discussed below. MoDOT typically provides confinement reinforcement for the full length of girders in lieu of 1.5*d* regardless of debonding.

NCHRP Report 849 proposes a Strut and Tie Model (STM) approach for designing confinement reinforcement in order to mitigate lateral splitting failures at the ultimate limit state, similar to research by Ross et al. (2013). These authors suggest confinement reinforcement should be designed to resist a transverse tension tie that could lead to vertical cracks through the bottom flange at the end of girders. An experimental girder case illustrating a lateral splitting failure is shown below in Figure F-5. The location of the transverse tension tie in the STM methodology is identified in Figure F-6.

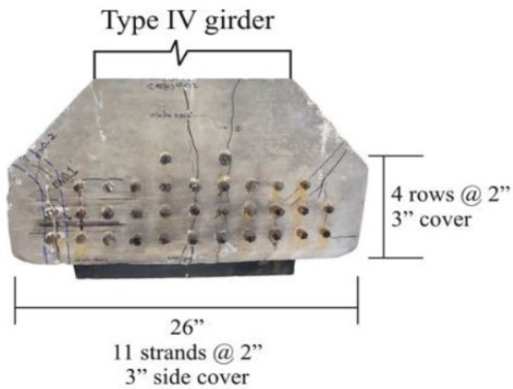

Figure F-5: Lateral splitting failure - vertical cracking (NCHRP Report 849)

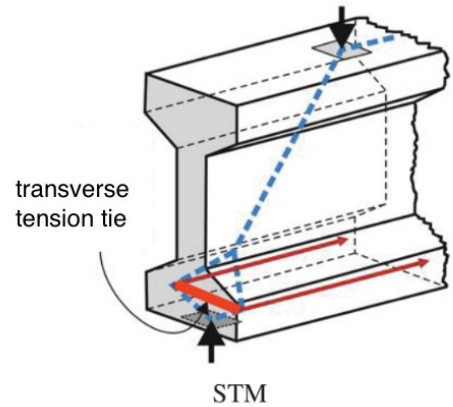

Figure F-6: STM - transverse tension tie (NCHRP Report 849)

From investigating these vertical cracks through a STM study, it was reported in NCHRP Report 849 that the current AASHTO (2017) articles on confinement were adequate to resist the transverse tension tie force for girder shapes with a narrow bulb (e.g., AASHTO I girders). However, the current AASHTO (2017) confinement requirements were not sufficient for deep girders with a wider bulb (e.g., BT and NU girders). This finding was based on looking at girder cases with up to 67% debonding. For the cases where AASHTO confinement codes did not provide satisfactory amounts of reinforcement to resist the transverse tie force, Shahrooz et al. (2017) reported that larger size and closer-spaced confinement reinforcement could be used (e.g., No. 4 ties at 3 in. spacing which were adequate for all girder geometries except deep NU girders which have a wider bottom flange). Alternatively, the authors provided a formula that they developed to determine the required tension in the horizontal tie to be resisted by confinement reinforcement. Otherwise, an embedded steel sole plate may be used in addition to the confinement reinforcement requirements presented in AASHTO (2017) LRFD Article 5.9.4.4.2.

MnDOT girders vary in flange width depending on the standard beam sections, and some align closely with widths of AASHTO girders (e.g., 32M girders at circa 26 in.) while others have similar widths as NU girders (e.g., 82MW girders at circa 39 in.). MnDOT also uses an embedded steel sole plate in standard beam sections, but it allows it to be omitted for beams that will be placed in integral abutments. The AASHTO (2017) LRFD Article 5.9.4.4.2 for confinement may be used in either case. The two requirements specified in the research reports regarding the use of the sole plate were (1) that the sole plate width must be at least half of the bottom flange width, and (2) that the sole plate is embedded. An embedded sole plate helps maintain structural integrity of the bottom flange above the bearing and provides additional confining

capacity (Ross 2012). The authors of NCHRP Report 849 considered this additional confining capacity from the steel sole plate to be adequate regardless of girder section geometry and levels of debonding up to 67% that the report evaluated. Because MnDOT provides an embedded sole plate cast with the beam, unless placed in integral abutments, meeting these requirements and further adheres to the appropriate AASHTO articles for confinement, no changes are required with regard to confinement detailing as a result of implementing debonded strands.

Additional Precautions

With regards to additional precautions taken by other state highway agencies, IDOT requires that the extent of debonding be measured. MnDOT may similarly obtain this information by requiring that fabricators mark strands at a known distance from the end of the beam to measure the amount of retraction after cutting. The debonding measurements can be helpful if there is ever any concern about the debonding release during fabrication.

Lastly, inspection and monitoring programs could be established to track the performance of girders with debonded strands, as well as the field performance of corrosion protection methods utilized. The information gathered from these programs could then be used to determine any additional amounts of debonding that may be permitted.

The following draft design guideline document contains the detailed recommendations for implementing debonded strands in Minnesota.

Draft MnDOT Design Guidelines on Debonded Strands

MnDOT LRFD Bridge Design Manual (June 2019)

5.4 Pretensioned Concrete

5.4.1 Geometry

5.4.2 Stress Limits

5.4.3 Design/Analysis

[The following changes are proposed to the (June 2019) MnDOT LRFD Bridge Design Manual following paragraph 5 in Section 5.4.3 Design/Analysis: "If the calculated initial and final strengths differ…. affects the prestress losses and the composite beam section modulus."]

Strand Arrangement

Arrange straight strands in a 2 inch grid pattern with the bottom row of straight strands located 2 inches from the bottom of the beam. See standard beam sheets for possible strand locations. Use draped strands to reduce the initial required strength f'ci at the end of the beam. ~~Do not use debonded strands.~~ Arrange draped strands in a 2 inch grid pattern independent of the straight strands. Locate draped strands starting 4 inches minimum from the bottom of the beam at the hold-downs and 3 inches minimum from the top at the end of the beam. When straight strands are not used in the web area, draped strands may start at 3 inches minimum from the bottom of the beam at the hold-downs. Straight (bonded) strands should be used in place of debonded and draped strands whenever possible.

For all designs, include a base set of straight strands in the locations shown in Figure 5.4.3.1. These base strands provide the fabricator a stable place to tie the flange confinement reinforcement, which in turn will be used to secure the stirrups in the bottom of the beam. For designs where fully tensioning all the base strands is undesirable, it is acceptable to pull selected pairs of the base strands to a lesser initial tension of 10 kips.

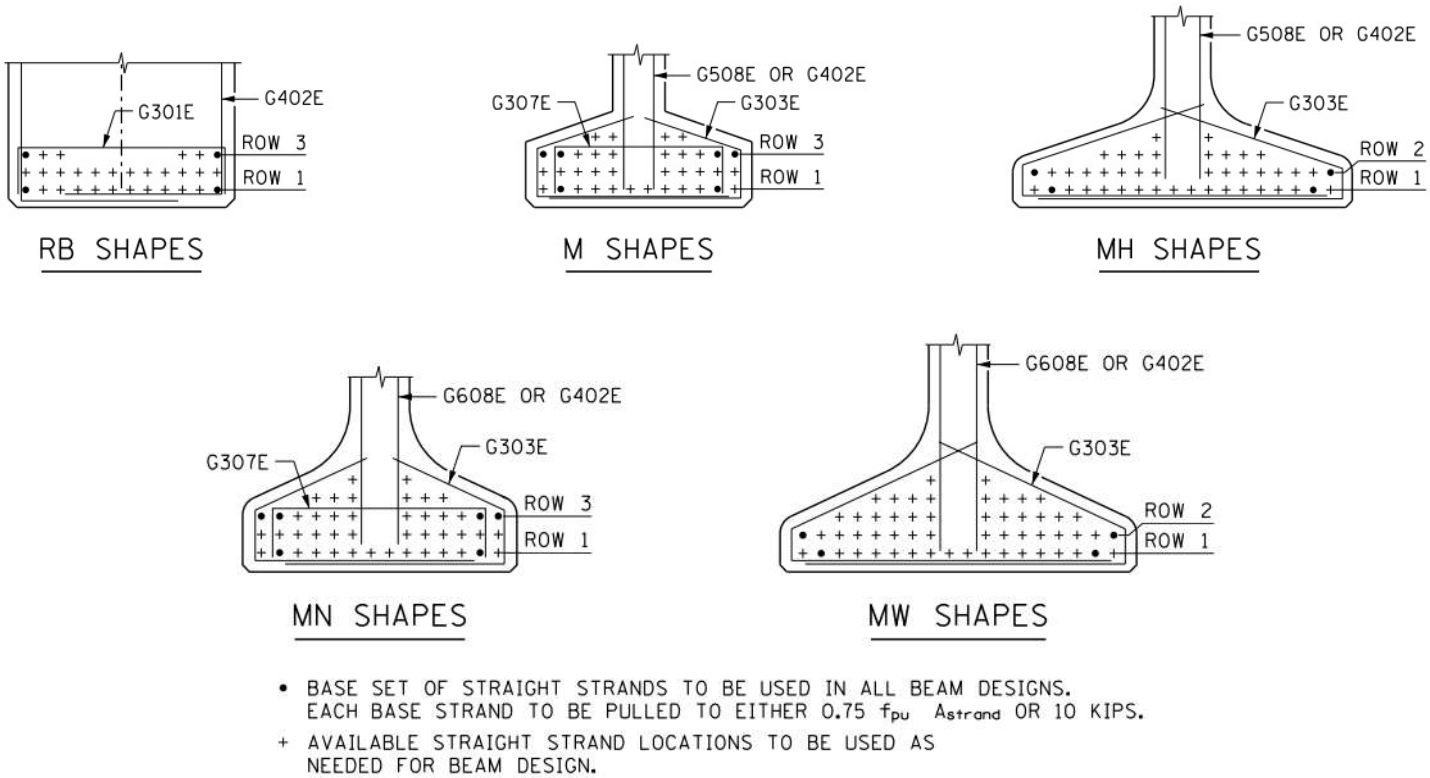

Figure 5.4.3.1

In addition to the base set of straight strands, choose a strand pattern in accordance with the following. Typically, place strands from the bottom up (i.e. – fill all of Row 1 and then all of Row 2, etc.) to get the largest eccentricity and therefore the most efficient design at midspan. For rows that are not completely filled, place the strands to provide an approximately uniform prestress force across the width of the bottom flange. For example, if the second row of an MN series beam requires only four strands, place them as shown in Figure 5.4.3.2.

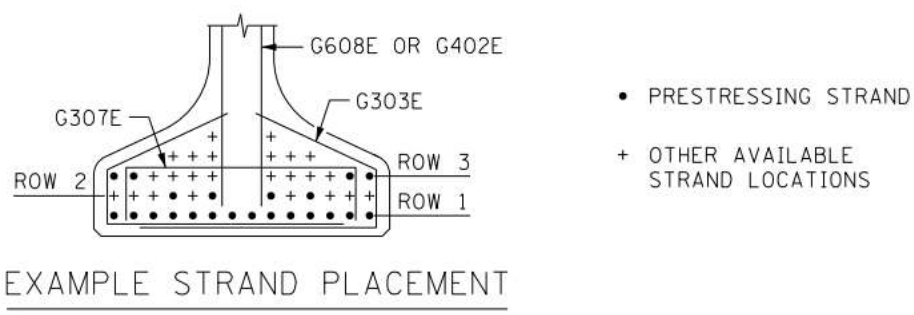

Figure 5.4.3.2

Draft MnDOT Design Guidelines on Debonded Strands

Whenever possible, use a constant strand pattern for all girders on the same project. If the strand pattern varies between beams, the fabricator may be required to tension an entire bed length of strand in order to cast a single girder. This results in a large amount of wasted strand, and will increase the cost of the beam.

~~The maximum number of draped strands allowed at each hold-down point varies with the fabricator. Therefore, design and detail beams with one hold-down on each side of midspan, placed at 0.40L to 0.45L from the centerline of bearing. The fabricator will provide additional hold-downs as needed.~~

End Stress Reduction

Debonded Strands

Based on the review of various research reports and specifications of other state highway agencies where debonded strands have been implemented, as well as specifications of AASHTO, debonding is considered a feasible design alternative to draping in reducing end stresses.

If debonding is preferred as the primary method of reducing end stresses, up to 40% of the total number of strands may be debonded.

If 40% debonding is not sufficient in reducing end stresses, an additional 10% of the total strands may be debonded [upon the approval of Bridge Design Engineer] for a total of 50% debonding.

If satisfactory end stress limits are still not achieved, draped strands may be considered in addition to debonding. Draping should be limited to eight (8) – 0.6 inch diameter strands due to safety and constructability concerns associated with capacity of hold down devices.

The following design guidelines are to be used when utilizing debonded strands in order to achieve the most efficient reduction of end zone stresses and cracking:

1) No more than 40% of debonded strands, or four strands, whichever is greater, shall have debonding terminated at any section, where section is defined as an increment (i.e., 3 ft, 6 ft, 9 ft).
2) Debonded strands shall be symmetrically distributed about the centerline of the member. Debonded lengths of pairs of strands that are symmetrically positioned about the centerline of the member shall be equal (AASHTO 2017).
3) Debond strands in 3 ft increments at a minimum between section (i.e., 3 ft, 6 ft, 9 ft).
4) Exterior strands (within the full-width portion of bottom flange) shall remain bonded.
5) Interior strands (within the width of the web) shall remain bonded.
6) Satisfy AASHTO (2017) LRFD Articles 5.9.4.3.3 for calculating development lengths with k=2.0.
7) Satisfy AASHTO (2017) LRFD Articles 5.7.3.5 for checking the tensile capacity of longitudinal reinforcement.
8) Satisfy AASHTO (2017) LRFD Articles 5.9.4.1 for minimum spacing of debonded strands (same as bonded strands).

9) Satisfy AASHTO (2017) LRFD Articles 5.12.3.3.9 for positive moment connections. Strands that are debonded at the end of a member may not be used as reinforcement for the positive moment connection into continuity diaphragm.
10) Satisfy AASHTO (2017) LRFD Articles 5.5.4.2 for resistance factors. The use of debonded strands in non-tension-controlled zone qualifies for a resistance factor of 1.0.

For girders with debonded strand, d_v is calculated by neglecting the area of debonded strand for the length over which it is debonded plus a length of at least l_d, determined using Eq. 5.9.4.3.2-1 with the value of κ taken as 2.0. For areas where previously debonded strand has been bonded for distances less than l_d, the value of d_v is calculated accounting for the lack of development of the strand, according to Article 5.9.4.3.2. As an alternative, d_v can be conservatively taken as the lesser of d_v calculated assuming all previously debonded strands are fully effective and d_v calculated neglecting all previously debonded strands.

Strands should not be debonded over lengths longer than necessary to satisfy end stresses. The maximum debonding length should not exceed the lesser of 15% of the span length, and 15 feet from each end of the girder.

If debonded strands lead to violation of AASHTO LRFD Article 5.7.3.5 for longitudinal reinforcement, provide additional mild longitudinal steel to satisfy the longitudinal reinforcement required. AASHTO requires this mild steel be placed within the tensile region of the member, but should be placed in the bottom flange whenever possible.

When additional nonprestressed longitudinal reinforcement is used in a section with debonded strands, the tensile force in the prestressing reinforcement ($A_{ps}f_{ps}$) shall exceed the tensile forces of the nonprestressed reinforcement (A_sf_s) at all sections. Development of straight and bent-up strands as well as overhangs, if present, should be considered for determining the value of fps and fs.

Otherwise, debonded strands may be used up to the point of satisfying AASHTO longitudinal reinforcement requirements without the use of additional mild steel, and draped strands utilized to reduce the remaining end stresses.

Draped Strands

If draping is preferred as the primary method of reducing end stresses, up to eight (8) – 0.6 inch diameter strands may be used.

Draped strands may also be used to reduce the initial required strength f'ci at the end of the beam.

The maximum number of draped strands allowed at each hold-down point varies with the fabricator. Therefore, design and detail beams with one hold-down on each side of midspan, placed at 0.40L to 0.45L from the centerline of bearing. The fabricator will provide additional hold-downs as needed.

Draft MnDOT Design Guidelines on Debonded Strands

When using draped strands, the following guidance is provided to designers to evaluate initial and final stresses to optimize their designs:

Final Stresses
Midpoint strength at bottom of beam…

Initial Stresses
Midpoint strength at bottom of beam…

If eight (8) draped strands are not sufficient in reducing end stresses, or the guidance above results in an initial concrete strength greater than 7.0 ksi, ~~the initial strength may be increased up to a maximum value of 7.5 ksi. Note that this will likely increase the beam cost.~~ debonded strands may be utilized in accordance with the previously stated design guidelines.

Sheathing of Debonded Strands

Use flexible double split-sheathing tube material that is high-density plastic, each with a minimum wall thickness of 0.025 in to achieve debonding. The inside diameter of the sheathing must exceed the maximum outside diameter of the pretensioning strand by 0.025 in to 0.140 in. The slits in each tube must be on opposite sides of the strand to prevent concrete from entering the conduit and reacting with the strand. Figure F-7 shows a single flexible split-sheath tubing, and Figure F-8 shows the double flexible split-sheath tubing.

The interior end of the sheathing shall be tied with suitable material (e.g., rebar tie wire) or taped with waterproof material or sealed with silicone caulk to prevent concrete entry. Figure F-9 shows the use of caulk to prevent concrete entry along the debonded length of strand.

Figure F-7: Single flexible split-sheathing

Figure F-8: Double flexible split-sheathing tube method

Figure F-9: Silicone sealant applied within the beam form (Photo courtesy of IDOT)

Alternatively, use oversized rigid preformed sheathing tube that is seamless with the strand. This option, however, is a detriment to the ease of fabrication associated with pulling the strands through the sheathing.

As a last option, a single split-sheathing tube may be used. The sheathing must be taped and tied to prevent concrete entering inside the conduit and forming a bond with the strand.

Corrosion Protection of Debonded Strands

In addition to fabricator practices to paint the ends of prestressed beams (i.e., end and side surfaces) with approved materials, apply silicone sealant on the exposed strand ends to cover both the strand and sheathing.

Alternatively, the silicone sealant may be applied at the end of the girder on the voids between the strands and sheathing. One of the drawbacks of this method is that fabricators have observed pop out of the caulk used to seal the voids between the strands and sheathing. This alternate method is also in addition to covering the strand ends with sealant per approved products list as specified in standard beam detail sheets.

Use a silicone sealant that is light/white in color and with a low modulus of elasticity, to allow for expansion and contraction of the sealant under temperature changes. Care should be taken when applying silicone sealants to the strands and shall be inspected to ensure strands remain sealed prior to shipment of girders.

Alternatively,
After strands are cut flush with the beam:

> *Treat debonded strands with an asphaltic material to seal the voids between the strands and sheathing in order to mitigate chloride ingress through the void along the sheathing.*
>
> *Otherwise, treat debonded strands at the end of the beam with corrosion-resistant grout.*

Transverse Reinforcement

Ensure that adequate shear and splitting reinforcement is provided in the ends of beams. For RB, M, and MH series beams, the maximum size for stirrup bars is #5. For MN and MW series beams, the maximum size for stirrup bars is #6. In order to achieve proper concrete consolidation, the minimum spacing for #5 stirrups is 2 ½ inches and the minimum spacing for #6 stirrups is 3 inches. ~~If the required amount of splitting reinforcement cannot be provided within h/4 of the end of the beam, provide the remainder at minimum spacing.~~ Provide 50% of the required splitting reinforcement within *h*/8 of the end of the beam, if possible. The remainder of required steel is to be placed between *h*/8 and *h*/2 from the end. Placing most of the required steel within *h*/8 will have the most effective crack control with the least amount of steel.

If 50% of the required reinforcement cannot be provided within *h*/8, provide the total required amount of reinforcement within *h*/4 of the end of the beam. If this is not possible, the remainder of reinforcement may be placed at a 2 ½ in minimum spacing beyond *h*/4.

Design shear reinforcement using the "General Procedure" provisions given in LRFD Article 5.7.3.4.2…

Confinement Reinforcement

[No changes are recommended to MnDOT's current confinement reinforcement requirements.]

Strand Release Pattern, Detensioning Sequence

Fully bonded strands shall be released first, and debonded strands shall be released after all fully bonded strands have been released. The debonded strands are to be released in sequence from shortest debonded length to maximum debonded length.