GRADING & BASE MANUAL

Developed by
Geotechnical Section
Grading & Base Unit
April 4, 2014

Foreword

Grading and Base construction utilizes large quantities of materials. The control of the quality and placement of these materials involves the application of various test procedures and inspection techniques to ensure the materials and the manner in which they are placed comply with the specification requirements.

The manual's procedures help ensure uniformity of methods and that materials are placed as specified.

Grading and Base Engineer
Minnesota Department of Transportation

Preface

The final control of the quality of materials and their use is accomplished by the Engineer and Inspectors. Field personnel verify that materials meet the specifications, and procedures are followed.

This manual specifies: sampling, testing and inspection requirements. Emphasis has been placed on procedures for field use and the application of the test results in controlling aggregate production and construction methods. Included is a section on soils classification.

Table of Contents

5-692.000- General 6

5-692.000. Duties of the Inspector 7
5-692.001. Grading Construction 8
5-692.002. Base Construction 10

5-692.100- Sampling, Random Sampling and Splitting 12

5-692.100. Sampling, Random Sampling and Splitting 14
5-692.101. General Sampling Requirements 14
5-692.102. Rate of Sampling (Schedule of Materials Control) 14
5-692.103. Sampling at the Source (Contractor) 14
5-692.106. Sampling for Embankment Construction 15
5-692.107. Sampling from the Road for Base, Surface and Shoulder Aggregates 15
5-692.110. Quality Control (QC) Testing, Sampling and Certification 15
5-692.111. Contractor Control Charts and Tables 15
5-692.120. Verification Testing (VT): Roadway Materials Sampling and Testing 16
5-692.125. Random Sampling Procedures 16
5-692.130. Non-Random Sampling 22
5-692.135. Sampling for Proctor (Moisture Density Test) 22
5-692.140. Splitting 23
5-692.141. Quartering Method of Sample Size Reduction 23
5-692.142. Ring and Cone Method of Sample Size Reduction 24
5-692.143. Riffle Splitter Method of Sample Size Reduction 26
5-692.150. Independent Assurance (IA) Sampling and Testing 27
5-692.160. Sample Identification Card 27
5-692.170. Documentation 29
5-692.180. Sampling Bituminous Stabilized Materials 29
5-692.181. Sampling for Stabilized Full Depth Reclamation (SFDR) Mix Design 30
5-692.182. Sampling for Cold In-Place Recycling (CIR) Mix Design 30

5-692.200- Methods of Testing 32

5-692.201. Test for Shale in Coarse Aggregate – Pick Method 36
5-692.202. Test for Shale in Fine Aggregate – Float Method 36
5-692.203. Field Test to Determine Crushing (%) - Conveyor Belt Method 36
5-692.204. Determination of Crushing (%) - By Crushed Particle Count of + No. 4 38
5-692.215. Sieve Analysis Test Procedure (Gradation) 41

5-692.216. Washing & Drying Gradation Samples Containing Salvaged Bituminous 46
5-692.222. Moisture-Density Test Method (Proctor) 46
5-692.231. Calibration of Sand Cone and Ring 64
5-692.232. Calibration of Standard Sand 64
5-692.245. Moisture Test 67
5-692.246. Field Density Test: Sand Cone Method 77
5-692.247. Sampling and Inspection 77
5-692.248. Field Density Test Procedure 77
5-692.251. Relative Density 80
5-692.253. Relative Moisture 82
5-692.255. Dynamic Cone Penetrometer (DCP) 84
5-692.260. Pulverization Determination for Binder Soils 90
5-692.270. Test Rolling 90
5-692.280. Moisture-Density Test Using Modified Effort 91
5-692.281. Moisture Test for Bituminous Stabilized Materials 97
5-692.282. In-Place Density Using Nuclear Methods 98
5-692.284. Measuring Grinding Depth in the Field 100
5-692.285. Measuring Expansion Ratio and Half-Life of Foamed Asphalt in the Field 101
5-692.286-5-692.287. Measuring Field Application Rate Using Direct/Indirect Methods . 102
5-692.290. SFDR Mix Design Procedure 104
5-692.291. CIR Mix Design Procedure 108

5-692.300- Reports 113

5-692.301. Grading and Base Reports 114
5-692.315. Materials Certification 115
5-692.316. Requirements for Certification 117

5-692.400- Field Inspection of Materials 119

5-692.401 Culvert Inspection and Installation 120
5-692.430 Grading and Base Conversion Factors (English) 123

5-692.500- Treatment & Stabilization of Soils/Bases 126

5-692.515. Use of Calcium Chloride For Dust Control 127
5-692.521. Use of Lime to Dry Soil 127

5-692.600- Soil Classification Introduction 129

5-692.600. Soil Classification Introduction 130

5-692.601. Soil Identification 130
5-692.602. Pedological Classification 130
5-692.603. Primary Classifier (Texture) 131
5-692.604. Secondary Classifiers 142
5-692.605. Organic Soils 144
5-692.606. AASHTO Classification 145
5-692.607. Soil Selection Guide for Field Inspectors 152
5-692.620. Soil Profile 156
5-692.621. Definition (Soil Profile) 156
5-692.622. Development of Soil Profile 157
5-692.623. Prairie Soils 158
5-692.624. Forest Soils 158
5-692.625. Types of Surficial Geological Deposits in Minnesota 158
5-692.630. Soil Selection 164

5-692.700- Formulas and Computations 166

5-692.702. Computing Stabilized Gravel Mixture 167
5-692.703. Computation of Quantities for Base Construction 167
5-692.704. Determining Quantities (per mile) for Base Construction Ingredients 168
5-692.705. Procedures for “Rounding Off” 170
5-692.706 English-Metric Equivalent Gradation Sieve Sizes 172

List of Tables

5-692.100- Table 1. Control Chart and Table Rounding Method 16
5-692.100- Table 2. Class 5 Control Table Example 16
5-692.100- Table 3. Tabulation of Random Number 19
5-692.100- Table 4. Distance from Starting Station to Sample Location 21
5-692.100- Table 5. Station for Each Sample 21
5-692.100- Table 6. Station for Each Sample 22
5-692.100- Table 7. Protocol for overrun quantities 22
5-692.100- Table 8. Required Documentation 29
5-692.100- Table 9. Requirements for Crushed Bituminous (SFDR) 30
5-692.100- Table 10. Requirements for Crushed Bituminous (CIR) 31
5-692.200- Table 11. English Example: (Figure 10) 53
5-692.200- Table 12. Metric Example: (Figure 10) 53
5-692.200- Table 13. Conversion Table – Percent Moisture 76
5-692.200- Table 14. Requirements for SFDR Mix Design 108
5-692.200- Table 15. Requirements for CIR Mix Design 108
5-692.200- Table 16. Application Rates for Dust Control 127
5-692.600- Table 17. Classifying Soils by Grain Size 131
5-692.600- Table 18. Gradation Limit of Textural Soils Group 141
5-692.600- Table 19. Classification of Soil-Aggregate Mixtures 152
5-692.600- Table 20. Soil Identification 154
5-692.700- Table 21. Computing Stabilized Gravel Mixture 167

List of Figures

5-692.100- Figure 1. Example Control Chart ... 16
5-692.100- Figure 2. Four (4) Equal Sublots ... 21
5-692.100- Figure 3. Cross-Section of Sampling Location ... 21
5-692.100- Figure 4. Quartering Method of Sample Size Reduction ... 24
5-692.100- Figure 5. Ring & Cone Method to Reduce Sample Size ... 25
5-692.100- Figure 6. Riffle Splitter Method to Reduce Sample Size ... 26
5-692.200- Figure 7. Percent Crushing Report ... 40
5-692.200- Figure 8. Sieve Analysis Work Sheet Example (Form G&B-101 or 102) ... 45
5-692.200- Figure 9. Equipment for Proctor Test ... 48
5-692.200- Figure 10. Example Proctor Calculation Worksheet ... 59
5-692.200- Figure 11. Example Proctor Curve (Hand Drawn) ... 60
5-692.200- Figure 12. Example Proctor Curve (Computer Generated) ... 61
5-692.200- Figure 13. Typical Moisture Density Curves (English) ... 62
5-692.200- Figure 14. Typical Moisture Density Curves (Metric) ... 63
5-692.200- Figure 15. Example Labeling Requirements for Calcium Chloride ... 69
5-692.200- Figure 16. Hazardous Material Shipping Document ... 70
5-692.200- Figure 17. Sealing, Shaking, and Reading the Speedy Test Apparatus ... 73
5-692.200- Figure 18. Placing Sample and Reagent into Speedy Apparatus ... 74
5-692.200- Figure 19. Reading the Speedy Gauge and Releasing the Pressure ... 75
5-692.200- Figure 20. Example Relative Density Determination (Form G&B-304) ... 81
5-692.200- Figure 21. Relative Moisture Determination (Form G&B-105) ... 83
5-692.200- Figure 22. Dynamic Cone Penetrometer (DCP) Device ... 85
5-692.200- Figure 23. Penetration Index Method Example (Form G&B-204) ... 88
5-692.200- Figure 24. Edge Drain Trench with Filter Aggregate Detail ... 89
5-692.200- Figure 25. Penetration Index Example for Filter Aggregate(Form G&B-204) ... 89
5-692.200- Figure 26. Measuring Expansion Ratio ... 102
5-692.300- Figure 27. Grading and Base Report Example (Form G&B-001) ... 114
5-692.300- Figure 28. Materials Certification Exception Example ... 116
5-692.400- Figure 29. Culvert Installation ... 122
5-692.400- Figure 30. Culvert Installation (Deformed Pipe) ... 122
5-692.600- Figure 31. Triaxial Chart ... 140
5-692.600- Figure 32. Wisconsin Glaciation Ice Activity (Ojakangas & Matsch, 1982) ... 159

5-692.000- General

5-692.000. Duties of the Inspector 7
A. General 7
B. Preliminary Work 7
5-692.001. Grading Construction 8
A. Preparation of Embankment Areas 8
B. Excavation Areas 8
C. Excavation Below Grade 9
D. Spreading and Compacting 9
E. Control Testing for Embankment Construction 9
F. Measurement 10
5-692.002. Base Construction 10
A. Subgrade Preparation (Specification 2112) 10
B. Aggregate Gradation 10
C. Use of Recycled Materials 11
D. Moisture Control 11
E. Spreading and Compacting 11
F. Compaction Control 11
G. Workmanship and Quality 11
H. Measurement 11

5-692.000. Duties of the Inspector

A. General

1. The primary duty of the Inspector is to observe the materials and procedures to ensure that the project is constructed in conformance with the plans, specifications and special provisions.

2. Verify that the materials used meet requirements and are incorporated into the work in accordance with the specifications. Materials control is accomplished by sampling, testing and observation. The sampling and testing procedures are part of the contract and are used as the basis for accepting or rejecting the materials. Any deviations from this manual must be documented.

3. Tests are a tool to assist the Inspector to evaluate the work. If results do not agree with what is observed, the Inspector should investigate immediately to determine why. For example, if the embankment area is hard and firm, but the density test indicates that the density fails to meet requirements, the Inspector should immediately inspect the test area and re-test.

B. Preliminary Work

Before starting work, the inspector is responsible for reviewing and understanding:

- the plans and proposal
- sources of materials including borrow and gravel pits
- planned limits of select soils
- depth and disposition of topsoil
- compaction and moisture requirements
- disposal of unsuitable soils
- preparation of sub-foundation and culverts
- details of swamp (muck) excavation
- fill and overload

Contact the Engineer regarding any concern, or confusion with these items. The District Soils Engineer can provide clarification of design intent and the Grading and Base Unit can provide interpretation of specifications/ special provisions and materials control schedule items. Other items can be resolved in the Pre-Construction conference with the Contractor.

B.1 Grading Projects

- Conduct a preliminary field inspection to gain familiarity with the project.
- Examine cut faces on grading projects for soil type information
- Examine auger boring information and take additional borings, if needed to determine the approximate limits of each major soil type
- Take samples of the major soils types, perform proctor tests and retain samples for reference during construction.

B.2 Base Projects

- Conduct a preliminary field inspection to gain familiarity with the project.

- Examine the grade for weak areas. Record the location of these areas and obtain auger borings

If the borings indicate the need for a possible subgrade correction, consult the soils engineer for recommendations.

5-692.001. Grading Construction

A. Preparation of Embankment Areas
Prepare the embankment area in accordance with 2105 or 2106, "Excavation and Embankment" and reserve the topsoil in accordance with the Specifications.

Locate culverts and locations and see that required treatments are staked to provide the required tapers. See Section "5-692.401 Culvert Inspection and Installation" for culvert inspection and installation.

B. Excavation Areas
The Contractor should maintain excavation areas in a well-drained condition at all times. Excavation areas that trap water are in violation of the specifications.

Examine soils being excavated for use in embankment construction. The best materials should be selected for use in the upper portion of the embankments, and the poorer soils should be placed in the lower portion. Dispose of unsuitable soils in accordance with the specifications.

Soil selection is one of the most important functions of the grading inspector. The grade is the foundation for the roadway. The materials selected as a foundation should be the best available.

For most grading projects, a soil survey has been made prior to design to determine what kinds of soil will be uncovered at or near grade line. Samples of these soils have been tested and their engineering properties evaluated. This information is applied to the design to make use of the best soils where they will do the most good and the poorest soils where they will have the least detrimental effect.

There are several tools available to the inspector to assist in soil selection. They are Soil Classification and Identification by texture, identification by soils groups and the use of the Group Index.

Section, "5-692.600. Soil Classification Introduction" covers the following:

1. Soil Classification and Identification by texture

2. Identification by soils group

3. Group Index

Items 2 and 3 are determined from tests made in the laboratory. However, those values have been determined for samples tested in connection with the soils survey. Copies of these test results should be obtained from the District Soils Engineer and used for reference.

Every effort should be made to select soils in such a manner that a roadbed composed of uniform soils is obtained, particularly in the upper three feet of the grade.

The Contractor's foreman should be advised as to where the inspector wants the soils placed in the embankment. It is easier to obtain cooperation before the soils are hauled to the embankment area. In ordering selection or mixing of soils, the inspector should be aware of the restrictions imposed in 2105 or 2106.

C. Excavation Below Grade

Subcuts should be excavated to the planned dimensions. Prepare the bottom of the subcut in accordance with Specification 2105.3E or 2106.3E, "Placing Embankment Materials".

In cases where the bottom of the subcut will not support the equipment and the backfill is placed in one layer in accordance with the provisions of 2105.3E or 2106.3E, "Placing Embankment Materials" it is desirable to end dump; then mix and spread thick layers with a dozer. Do not permit the use of compactive equipment that will distort the bottom of the subcut.

If the open subcut reveals wet conditions, or badly mixed soils and no treatment for these conditions is provided in the contract, consider providing either granular or a more uniform soil backfill. Consult the District Soils Engineer and follow the given recommendations.

If unsuitable soils are encountered below the planned subcut, additional excavation may be required. Contact the Project Engineer and the District Soils Engineer and follow their recommendations

D. Spreading and Compacting

Embankment Materials, see 2105.3E or 2106.3E, "Placing Embankment Materials" and 2105.3F or 3106.3F, "Compacting Embankments".

Make every effort to achieve sufficient mixing in order to prevent large pockets of different classes of soils from being placed in localized areas. The work should be observed to ensure that compaction equipment operates uniformly over the entire embankment areas.

E. Control Testing for Embankment Construction

All granular items should be tested by the Contractor and certified on Form G&B-104 (TP-24346), "Certification of Aggregates and Granular Materials" prior to delivery and placement on the project. The Contractor's testing rate should be sufficient to guarantee that uniform acceptable material is being delivered to the project. The Project Engineer is responsible for acceptance testing in accordance with the Schedule of Materials Control.

The Moisture-Density (Proctor) Test, Field Density Test and Field Moisture Test are used to determine compliance with the specifications. These tests are tools to be used by the Inspector

to verify visual observations. As far as possible, the Inspector should strive to keep testing at a minimum and do more visual inspection.

Whenever a moisture-density (Proctor) determination is made, retain a sample in a moist condition and place it in a glass jar with a screw-on cap. Record the curve number, textural classification, maximum density and optimum moisture on a label affixed to the jar. See section, "5-692.600. Soil Classification Introduction".

The field moisture test, "5-692.245. Moisture Test" is used to determine compliance with the specification for moisture at the time of compaction. Obtain the sample for this test while the material is being compacted. The sample should represent the work being done. This requires close observation of the work.

The field density test, "5-692.246. Field Density Test: Sand Cone Method" is used to determine compliance with the compaction specification. Coordinate this test with close visual inspection.

The Quality compaction specification requires close visual inspection of the entire operation by an experienced inspector. Continuous observation of uniform compactive effort and moisture control are crucial to the successful use of this specification.

Much unnecessary testing can be avoided by good visual inspection. Observation of the work to ensure uniform compaction effort and moisture control will reduce the required number of tests. Close inspection of a grade meeting requirements plus picking with a sharp tool will give an inspector a good idea of what the passing grade should be like. Other areas can be checked in this manner and only a sufficient number of tests should be made to verify the inspector's judgment. Areas failing or yielding under construction traffic should be investigated and corrected.

F. Measurement
Measure and document all pay items according to the provisions in Specification 1901 and 5-591.410, "Documentation of Pay Quantities" of the Contract Administration Manual.

5-692.002. Base Construction

A. Subgrade Preparation (Specification 2112)
Take density tests as required of in-place subgrade and new embankment. Test in areas most likely to fail. Failing or yielding areas under construction traffic should be investigated and corrected.

Check the grade for compliance with tolerance requirements. It is not necessary to check all points. Spot check short sections of 300 - 500 feet. If the Contractor is checking the grade, observe and record his measurements.

B. Aggregate Gradation
Take samples for gradation when the material is mixed and is ready for compaction, i.e. "after spreading and before compaction". Sample and test in accordance with section, "5-692.215.

Sieve Analysis Test Procedure (Gradation)" and section, "5-692.125. Random Sampling Procedures".

Specifications 3138 & 3149 provide crushing requirements for Classes 5, 5Q, 6, drainable bases, and for Aggregate Bedding and Stabilizing Aggregate, respectively. Determine the percent of crushing in accordance with section, "5-692.203. Field Test to Determine Crushing (%) - Conveyor Belt Method" and section, "5-692.204. Determination of Crushing (%) - By Crushed Particle Count of + No. 4".

Shale requirements are also specified in 3138. The testing rate is determined by the Engineer based on past record from that source or preliminary tests.

C. Use of Recycled Materials
The use of recycled materials in 3138, "Aggregate for Surface and Base Courses" may be subject to added testing requirements and/or restrictions. For example, there may be a maximum bitumen content.

D. Moisture Control
Take moisture control samples from the windrow at the time of compaction.

E. Spreading and Compacting
The spreading process acts as another mixing step to make the aggregate more uniform.

F. Compaction Control
Maximum lift thickness of base aggregate layers may depend upon the amount of bitumen content and the type of compactive equipment, see specification.

Perform density and moisture testing per the project's Schedule of Materials Control.

Materials that contain a high percentage of crushed particles tend to resist consolidation by normal compaction methods. The inspector should carefully monitor moisture and layer thickness to assure adequate compaction with minimal damage to the particle size and shape.

Recycled materials may not be as durable or sound as virgin aggregates. Most of these materials are susceptible to degradation by excessive compactive efforts.

G. Workmanship and Quality
It is not required to check tolerance on each class of material. Only the final layer of base is required to meet tolerance requirements. Construct intermediate layers in reasonably close conformity with the cross-section shown in the plans.

H. Measurement
Measure and document all pay items according to the provisions in specification 1901 and section 5-591.410 of the Contract Administration Manual.

5-692.100- Sampling, Random Sampling and Splitting

5-692.100. Sampling, Random Sampling and Splitting 14
5-692.101. General Sampling Requirements 14
5-692.102. Rate of Sampling (Schedule of Materials Control) 14
5-692.103. Sampling at the Source (Contractor) 14
5-692.106. Sampling for Embankment Construction 15
5-692.107. Sampling from the Road for Base, Surface and Shoulder Aggregates 15
5-692.110. Quality Control (QC) Testing, Sampling and Certification 15
5-692.111. Contractor Control Charts and Tables 15
5-692.120. Verification Testing (VT): Roadway Materials Sampling and Testing 16
5-692.125. Random Sampling Procedures 16
A. General 17
B. Lot Determination 17
C. Testing 17
D. Random Samples 18
5-692.130. Non-Random Sampling 22
5-692.135. Sampling for Proctor (Moisture Density Test) 22
A. Grading Construction 22
B. Base, Subbase, and Surfacing Construction 23
5-692.140. Splitting 23
5-692.141. Quartering Method of Sample Size Reduction 23
A. General 23
B. Procedures 23
5-692.142. Ring and Cone Method of Sample Size Reduction 24
A. General 24
B. Procedure 24
5-692.143. Riffle Splitter Method of Sample Size Reduction 26
A. General 26
B. Procedure 26
5-692.150. Independent Assurance (IA) Sampling and Testing 27
Procedure: 27
5-692.160. Sample Identification Card 27
A. General 27
B. Procedure for Completing Sample ID Card 27

5-692.170. Documentation 29
5-692.180. Sampling Bituminous Stabilized Materials 29
A. Sampling Bituminous Materials 29
B. Moisture Samples 29
C. One Point Density 29
D. Bituminous Stabilized Base (SFDR) – Proctor Test using Modified Effort 29
5-692.181. Sampling for Stabilized Full Depth Reclamation (SFDR) Mix Design 30
5-692.182. Sampling for Cold In-Place Recycling (CIR) Mix Design 30

5-692.100. Sampling, Random Sampling and Splitting

This Section describes the following:

- General Sampling Requirements
- Rate of Sampling
- Contractor Quality Control (QC)
- Agency Verification Testing (VT)
- Random Sampling
- Non-Random Sampling
- Splitting
- Sampling for Independent Assurance (IA) Sample
- Special Sampling for Individual Tests
- Sample Identification
- Documentation

5-692.101. General Sampling Requirements

- Ensure that the sample represents the material being placed. Sample after spreading and prior to compaction.
- Use a square head shovel to obtain samples.
- Do not mix underlying material with the sample.
- Use a separation fabric (such as a geotextile or a polyethylene sheet) when sampling layers less than four inches thick. Separation fabric may also be used for thicker layers.

Note: place separation fabric at the bottom of the layer to be sampled. After material is placed, but before it is compacted, collect the material placed upon the separation fabric, as the test sample.

- Label and store in a sample bag, plastic pail or other suitable container.
- Deliver samples as soon as possible.

5-692.102. Rate of Sampling (Schedule of Materials Control)

The Schedule of Materials Control outlines the **minimum** required sampling and testing rates. Always use the Schedule included in the contract, as requirements and rates may change.

Take additional samples when there is an unusual variation of material properties. Compute an average, to determine compliance, using these additional tests results along with your original testing results.

5-692.103. Sampling at the Source (Contractor)

Obtain samples from a stockpile. Stockpile should be uniformly blended.

5-692.106. Sampling for Embankment Construction
Obtain the samples after spreading, but before compaction. Sample for gradation in areas most likely to fail and sample for qualities according to the random sampling procedures in section, "5-692.125. Random Sampling Procedures".

5-692.107. Sampling from the Road for Base, Surface and Shoulder Aggregates
Obtain a sample after spreading, and before compaction. Sample according to the random sampling procedures in section, "5-692.125. Random Sampling Procedures".

5-692.110. Quality Control (QC) Testing, Sampling and Certification

- The Contractor's testing agent must be MnDOT certified in Grading and Base I.
- Follow all applicable sampling and splitting procedures in this section, and the testing procedures in section 5-692-200 **Methods of Testing**
- If production test reports are required, attach all results to form G&B-104 (TP 24346), Certification of Aggregates, either prior to delivery or with the first load of material.
- The Contractor's Authorized Representative must sign the certification.
- Provide test reports to the Engineer electronically within 24 hours.

5-692.111. Contractor Control Charts and Tables
If required by the Contract, produce and maintain control charts and tables (see example and Table 2).

A control chart consists of plotting the following information, for each individual sieve, controlled by a given specification, on one graph:

- Percent passing verses sample number and
- Moving average using the previous four tests.

A control table summarizes the data plotted in the control chart in a tabular format.

Include the following information on each control chart and table:

- class of material,
- specification limits and
- project number.

Additionally, include the following information on the control table:

- date,
- moving average,
- test number and
- tester Full Name and Technical Certification Number.

Round results as follows (Table 1):

5-692.100-Table 1. Control Chart and Table Rounding Method

Sieve Size	**Rounding Method**
Larger than #200	1% (nearest percent)
Less than #200	0.1% (nearest tenth of a percent)

5-692.100-Table 2. Class 5 Control Table Example

Test #	1	2	3	4	5	6	7	8	9	10	11	12	13	14	15	16	17	18	19	20
Result	32	36	39	35	24	27	29	30	28	31	26	25	22	20	19	25	26	25	27	28
Moving Avg				36	34	31	29	28	28	30	29	28	26	23	22	22	22	24	26	26
Date	5/1	5/1	5/1	5/1	5/1	5/3	5/3	5/3	5/4	5/5	5/5	5/6	5/7	5/8	5/9	5/9	5/9	5/9	5/9	5/9
Tester	IJ	IJ	IJ	IJ	IJ	IJ	IJ	IJ	IJ	IJ	IJ	IJ	IJ	IJ	IJ	IJ	IJ	IJ	IJ	IJ

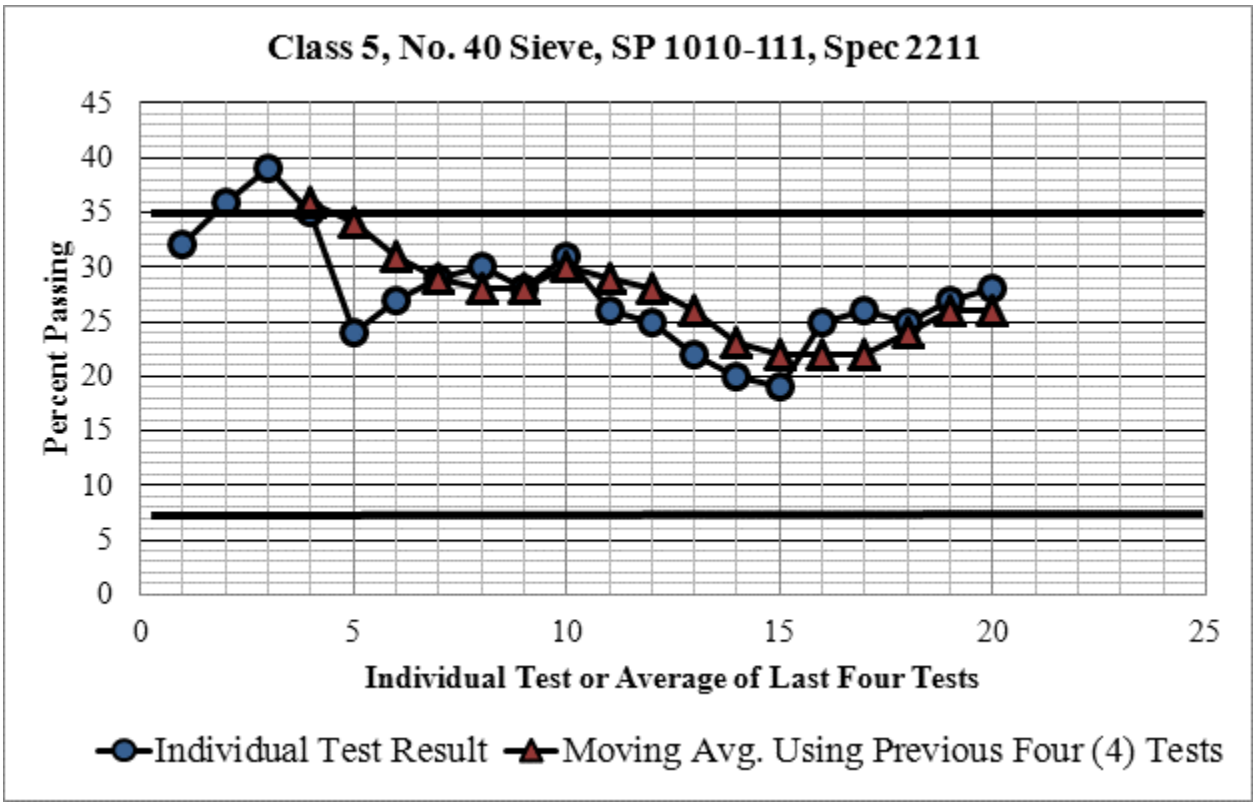

5-692.100-Figure 1. Example Control Chart

5-692.120. Verification Testing (VT): Roadway Materials Sampling and Testing

- The Agency's testing agent must be MnDOT certified in aggregate production.
- Sample material according to the rate in the Schedule of Materials Control.
- Sample material, according to the appropriate method per the specifications, either randomly per section, "5-692.125. Random Sampling Procedures", or non-randomly per section, "5-692.130. Non-Random Sampling".

5-692.125. Random Sampling Procedures

This section covers verification sampling and testing by the Random Sampling Method.

A. General

1. A Lot contains material from one pay item.

2. Lot sizes can be adjusted to allow for year-end cutoffs, lengthy interruption of work, etc., but cannot exceed the maximum size defined in the schedule of materials control.

3. Sampling should not be done until the Contractor has notified project personnel that they have completed all road blending and prior to compaction.

4. Lot sizes and the sampling rate are determined by the Schedule of Materials Control. The Engineer may adjust lot size because of Contractor operations.

5. Each Lot, depending upon its' size, should be divided into two or four sublots as defined in the Schedule of Materials Control.

6. Divide Lots into equal quantities. Divide sublots into equal quantities.

7. Average the results from each Lot to determine compliance.

8. Sample selection and location is the responsibility of the Engineer.

9. Locate sample sites using GPS, pacing or a measuring device. They do not need to be surveyed

B. Lot Determination

1. Determine number of Lots by dividing total quantity by maximum Lot size. Round to the next higher number.

   Example: Quantity = 12,000 yards
   Maximum Lot size equals 5,500 yards
   Number of Lots = 12,000/5,500 = 2.2, round up to 3 Lots

2. Determine Lot Size by Dividing the quantity by the number of Lots

   Example: 12,000 yards/3 Lots = 4,000 yards per Lot.

3. Determine Sublot size by dividing the Lot size by two or four, whatever is applicable (Note in most cases divide by four, see Schedule of Materials Control).

   Example: 4,000 Yards/4 = 1,000 yards per sublot.

C. Testing

1. Test according to the procedures in section, "5-692.200. Methods of Testing".

2. Report results on forms from the Grading and Base website, or on standard laboratory forms.
3. Notify the Contractor, as soon as possible, when a sample fails.

4. The Contractor is required to run new tests at the location of the failing test, when corrective work is performed.
5. Sample and test using new randomly selected locations, after receiving new passing results from the Contractor for corrective work.
6. Any monetary price adjustments will be determined by the most recent tests and applied to the entire Lot.

D. Random Samples

This section describes random sample selection by using random numbers to determine sample location.

i. Random Number Selection

Document how random numbers are obtained. You may use the method in this section or another random number generator, but the method must be documented.

1. Chose a random starting number by randomly opening a book. Use the resulting page number as the starting number.

2. Enter Table 3 at the top left and count vertically by columns or horizontally by rows to the designated number chosen in step 1 above. Proceed to the next column or row, when the end of the given column or row is reached. This is the first random number to use. Use the next consecutive number, in either the column or the row, depending on which procedure is used, as the second number and so on. Again, when reaching the end of the column or row, proceed to the start of the next column or row, respectively. It does not matter which method is used, only that one method is used consistently.

3. Continue to use the consecutive numbers for the rest of the project regardless of material classification or type of test that is being sampled.

Example: Open a book to page 38. Starting at the top left (top of the first column on the left) count down to the 38th number. The first random number is .84. From this point use consecutive numbers, i.e., the 39th (.18) the 40th (.79), etc. for the rest of the project regardless of material classification or type of test for that is being sampled.

5-692.100-Table 3. Tabulation of Random Number

.53 .74 .23 .99 .67	.61 .32 .28 .69 .84	.94 .62 .67 .86 .24	.98 .33 .74 .19 .95	.47 .53 .53 .38 .09
.63 .38 .06 .86 .54	.99 .00 .65 .26 .94	.02 .72 .90 .23 .07	.79 .62 .67 .80 .60	.75 .91 .12 .81 .19
.35 .30 .58 .21 .46	.06 .72 .17 .10 .94	.25 .21 .31 .75 .96	.49 .28 .24 .00 .49	.55 .65 .79 .78 .07
.63 .43 .36 .82 .69	.65 .51 .18 .37 .88	.61 .38 .44 .12 .45	.32 .92 .85 .88 .65	.54 .34 .81 .85 .35
.98 .25 .37 .55 .26	.01 .91 .82 .81 .46	.74 .71 .12 .94 .97	.24 .02 .71 .37 .07	.03 .92 .18 .66 .75
.02 .63 .21 .17 .69	.71 .50 .80 .89 .56	.38 .15 .70 .11 .48	.43 .40 .45 .86 .98	.00 .83 .26 .91 .03
.64 .55 .22 .21 .82	.48 .22 .28 .06 .00	.61 .54 .13 .43 .91	.82 .78 .12 .23 .29	.06 .66 .24 .12 .27
.85 .07 .26 .13 .89	.01 .10 .07 .82 .04	.59 .63 .69 .36 .03	.69 .11 .15 .83 .80	.13 .29 .54 .19 .28
.58 .54 .16 .24 .15	.51 .54 .44 .82 .00	.62 .61 .65 .04 .69	.38 .18 .65 .18 .97	.85 .72 .13 .49 .21
.34 .85 .27 .84 .87	.61 .48 .64 .56 .26	.90 .18 .48 .13 .26	.37 .70 .15 .42 .57	.65 .65 .80 .39 .07
.03 .92 .18 .27 .46	.57 .99 .16 .96 .56	.30 .33 .72 .85 .22	.84 .64 .38 .56 .98	.99 .01 .30 .98 .64
.62 .95 .30 .27 .59	.37 .75 .41 .66 .48	.86 .97 .80 .61 .45	.23 .53 .04 .01 .63	.45 .76 .08 .64 .27
.08 .45 .93 .15 .22	.60 .21 .75 .46 .91	.98 .77 .27 .85 .42	.28 .88 .61 .08 .84	.69 .62 .03 .42 .73
.07 .08 .55 .18 .40	.45 .44 .75 .13 .90	.24 .94 .96 .61 .02	.57 .55 .66 .83 .15	.73 .42 .37 .11 .16
.01 .85 .89 .95 .66	.51 .10 .19 .34 .88	.15 .84 .97 .19 .75	.12 .76 .39 .43 .78	.64 .63 .91 .08 .25
.72 .84 .71 .14 .35	.19 .11 .58 .49 .26	.50 .11 .17 .17 .76	.86 .31 .57 .20 .18	.95 .60 .78 .46 .75
.88 .78 .28 .16 .84	.13 .52 .53 .94 .53	.75 .45 .69 .30 .96	.73 .89 .65 .70 .31	.99 .17 .43 .48 .76
.45 .17 .75 .65 .57	.28 .40 .19 .72 .12	.25 .12 .74 .75 .67	.60 .40 .60 .81 .19	.24 .62 .01 .61 .16
.96 .76 .28 .12 .54	.22 .01 .11 .94 .25	.71 .96 .16 .16 .88	.68 .64 .36 .74 .45	.19 .59 .50 .88 .92
.43 .31 .67 .72 .30	.24 .02 .94 .08 .63	.38 .32 .36 .66 .02	.69 .36 .38 .25 .39	.48 .03 .45 .15 .22
.50 .44 .66 .44 .21	.66 .06 .58 .05 .62	.68 .15 .54 .35 .02	.42 .35 .48 .96 .32	.14 .52 .41 .52 .48
.22 .55 .22 .15 .86	.26 .63 .75 .41 .99	.58 .42 .36 .72 .24	.58 .37 .62 .18 .51	.03 .37 .18 .39 .11
.96 .24 .40 .14 .51	.23 .22 .30 .88 .57	.95 .67 .47 .29 .83	.94 .69 .40 .06 .07	.18 .16 .36 .78 .86
.31 .73 .91 .61 .19	.60 .20 .72 .93 .48	.98 .57 .07 .23 .69	.65 .95 .39 .69 .58	.56 .80 .30 .19 .44
.78 .60 .73 .99 .34	.43 .89 .94 .36 .45	.56 .69 .47 .07 .41	.90 .22 .91 .07 .12	.78 .35 .34 .08 .72
.84 .37 .90 .61 .56	.70 .10 .23 .98 .05	.85 .11 .34 .76 .60	.76 .48 .45 .34 .60	.01 .64 .18 .39 .96
.36 .67 .10 .08 .23	.98 .93 .35 .08 .86	.99 .29 .76 .29 .81	.33 .34 .91 .58 .93	.63 .14 .52 .32 .52
.07 .28 .59 .07 .48	.89 .64 .58 .89 .75	.83 .85 .62 .27 .89	.30 .14 .78 .56 .27	.86 .63 .59 .80 .02
.10 .15 .83 .87 .60	.79 .24 .31 .66 .56	.21 .48 .24 .06 .93	.91 .98 .94 .05 .49	.01 .47 .59 .38 .00
.55 .19 .68 .97 .65	.03 .73 .52 .16 .56	.00 .53 .55 .90 .27	.33 .52 .29 .38 .87	.22 .13 .88 .83 .34
.53 .81 .29 .13 .29	.35 .01 .20 .71 .34	.62 .33 .74 .82 .14	.53 .73 .19 .09 .03	.56 .54 .29 .56 .93
.51 .86 .32 .68 .92	.33 .98 .74 .66 .99	.40 .14 .71 .94 .58	.45 .94 .19 .38 .81	.14 .44 .99 .81 .07
.35 .91 .70 .29 .13	.80 .03 .54 .07 .27	.96 .94 .78 .32 .66	.50 .95 .52 .74 .33	.13 .80 .55 .62 .54
.37 .71 .67 .95 .13	.20 .02 .44 .95 .94	.64 .85 .04 .05 .72	.01 .32 .90 .76 .14	.53 .89 .74 .60 .41
.93 .66 .13 .83 .27	.92 .79 .64 .64 .72	.28 .54 .96 .53 .84	.48 .14 .52 .98 .94	.56 .07 .93 .89 .30
.02 .96 .08 .45 .65	.13 .05 .00 .41 .84	.93 .07 .54 .72 .59	.21 .45 .57 .09 .77	.19 .48 .56 .27 .44
.49 .83 .43 .48 .35	.82 .88 .33 .69 .96	.72 .36 .04 .19 .76	.47 .45 .15 .18 .60	.82 .11 .08 .95 .97
.84 .60 .71 .62 .46	.40 .80 .81 .30 .37	.34 .39 .23 .05 .38	.25 .15 .35 .71 .30	.88 .12 .57 .21 .77
.18 .17 .30 .88 .71	.44 .91 .14 .88 .47	.89 .23 .30 .63 .15	.56 .34 .20 .47 .89	.99 .82 .93 .24 .98
.79 .69 .10 .61 .78	.71 .32 .76 .95 .62	.87 .00 .22 .58 .40	.92 .54 .01 .75 .25	.43 .11 .71 .99 .31
.75 .93 .36 .57. 83	.56 .20 .14 .82 .11	.74 .21 .97 .90 .65	.96 .42 .68 .63 .86	.74 .54 .13 .26 .94
.38 .30 .92 .29 .03	.06 .28 .81 .39 .38	.62 .25 .06 .84 .63	.61 .29 .08 .93 .67	.04 .32 .92 .08 .09
.51 .28 .50 .10 .34	.31 .57 .75 .95 .80	.51 .97 .02 .74 .77	.76 .15 .48 .49 .44	.18 .55 .63 .77 .09
.21 .31 .38 .86 .24	.37 .79 .81 .53 .74	.73 .24 .16 .10 .33	.52 .83 .90 .94 .76	.70 .47 .14 .54 .36
.29 .01 .23 .87 .88	.58 .02 .39 .37 .67	.42 .10 .14 .20 .92	.16 .55 .23 .42 .45	.54 .96 .09 .11 .06
.95 .33 .96 .22 .00	.18 .74 .72 .00 .18	.38 .79 .58 .69 .32	.81 .76 .80 .26 .92	.82 .80 .84 .25 .39
.90 .84 .60 .79 .80	.24 .36 .59 .87 .38	.82 .07 .53 .89 .35	.96 .35 .23 .79 .18	.05 .98 .90 .07 .35
.46 .40 .62 .98 .82	.54 .97 .20 .56 .95	.15 .74 .80 .08 .32	.16 .46 .70 .50 .80	.67 .72 .16 .42 .79
.20 .31 .89 .03 .43	.38 .46 .82 .68 .72	.32 .14 .82 .99 .70	.80 .60 .47 .18 .97	.63 .49 .30 .21 .30
.71 .59 .73 .05 .50	.08 .22 .23 .71 .77	.91 .01 .93 .20 .49	.82 .96 .59 .26 .94	.66 .39 .67 .98 .60

ii. Sample Station Location

This section describes the method for determining the station number for each sample location. This method may be adjusted to locate from one to four samples. Keep a written record of the

computations in the project file. Use the random numbers determined in "**i**" section, "C. Testing".

Example: For aggregate base gradations, select four (4) random tests for 10,000 tons. Assume a 6 inch layer, 52 feet in width and 135 pounds per cubic foot maximum density. The four random numbers selected are the 38th through the 41st (.84, .18, .79 and .75). The beginning station is 10+50.

Calculate tons per lineal feet and total lineal feet.

$$\text{Tons per lineal foot} = \frac{\text{Length} \times \text{Width} \times \text{Thickness} \times \text{Maximum Density}}{2{,}000}$$

Where: Length, Width and Thickness are in units of feet and
Maximum Density is in units of pounds per cubic foot.

$$\text{Tons per Linear Foot} = \frac{1 \times 52 \times 6/12 \times 135}{2{,}000} = 1.755$$

$$\text{Total Linear Feet} = \frac{10{,}000}{1.755} = 5{,}698 \text{ Linear Feet}$$

Calculate length and starting station for each sublot.
Four (4) sublots.

$$\frac{5{,}698}{4} = 1{,}425 \text{ feet} = 14 + 25 \text{ Stations per sublot}$$

Note: 1,424.75 feet rounds to 1,425 feet (see 5-692.705. Procedures for "Rounding Off").

1 Road Station = 100 feet

(Stationing for sublots should be rounded to the nearest foot):
Starting Station for Sublot 1 from 10+50 to 24+75
Starting Station for Sublot 2 from 24+75 to 39+00
Starting Station for Sublot 3 from 39+00 to 53+25
Starting Station for Sublot 4 from 53+25 to 67+50

Calculate stationing for the four samples in each sublot.
Table 4 denotes the distance from starting station to the sample location.
Table 5 denotes station for each sample.

5-692.100- Table 4. Distance from Starting Station to Sample Location

Sample Number	Random Number		Length of Sublot		Distance from Starting Station
1	.84	×	1,425 feet	=	1,197 feet
2	.18	×	1,425 feet	=	256 feet
3	.79	×	1,425 feet	=	1,126 feet
4	.75	×	1,425 feet	=	1,069 feet

5-692.100- Table 5. Station for Each Sample

Sample Number	Beginning Station		Random Distance		Sample Location
1	10+50	+	1,197 feet (11+97 Sta)	=	Station 22+47
2	24+75	+	256 feet (2+56 Sta)	=	Station 27+31
3	39+00	+	1,126 feet (11+26 Sta)	=	Station 50+26
4	53+25	+	1,069 feet (10+69 Sta)	=	Station 63+94

Of the material being placed, obtain approximately one-third (⅓) of the sample from the center, and one-third (⅓) each of the sample from the ¼ points, and combine into one sample. Then split for 2 tests, see Figure 2and Figure 3.

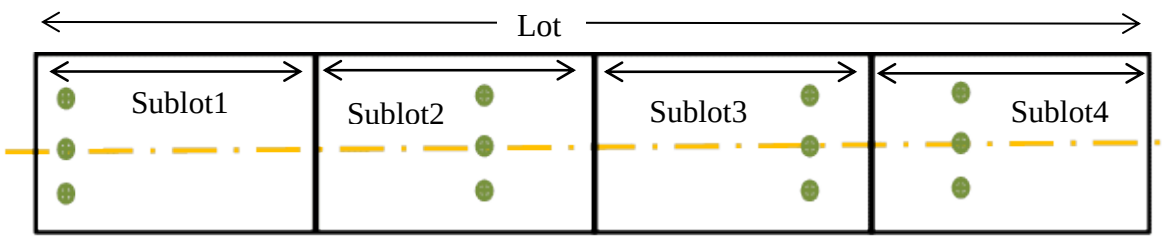

5-692.100-Figure 2. Four (4) Equal Sublots

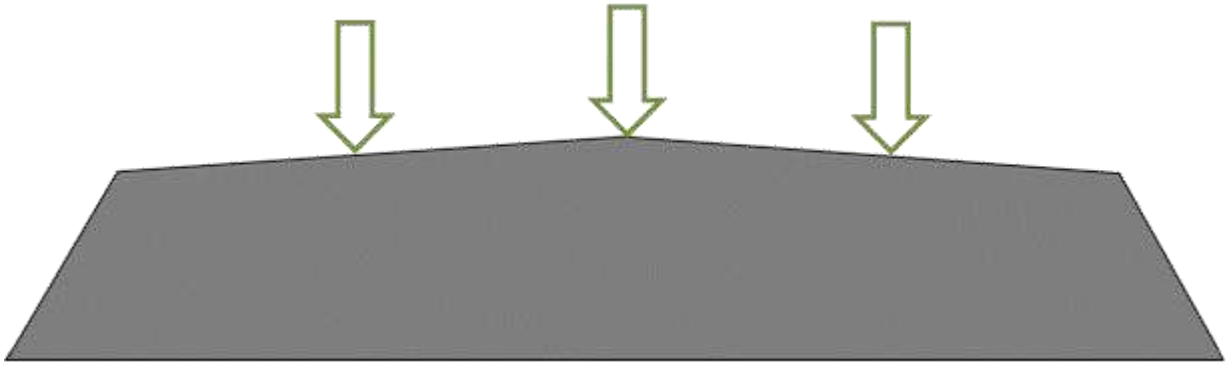

5-692.100-Figure 3. Cross-Section of Sampling Location

(Note figure shows material being placed across entire roadway width. Obtain sample across the width of material being placed.)

iii. Truck Load Count Sample Method

Determine lot size and random number per above. Divide Lot size by truck size to obtain total number of trucks required per Lot. Divide the Lot size by the number of sublots to determine

the sublot size. Apply random numbers to the sublot size to determine, which truck to sample. Take sample from the road after spreading, but before compaction at the location where the material from that truck was placed. **Not from truck box.**

Example: The project is under construction at several locations. Trucks hauling approximately 21 tons each will deliver 8,430 tons (Plan Quantity) of Class 5 aggregate base.

8,430 tons ÷ 21 ton/truckload (average) = 401.4 loads ≈ 401 loads

401 loads/4 ≈ 100 loads/sublot

Take samples from the approximate area these trucks place material. Table 6 denotes the truck to be sampled.

5-692.100- Table 6. Station for Each Sample

Sample Number	Random Number		Sublot Quantity		Truck Number
1	.84	×	100 Loads	=	Load # 84
2	.18	×	100 Loads	=	Load # 100 + 18 = 118
3	.79	×	100 Loads	=	Load # 200 + 79 = 279
4	.75	×	100 Loads	=	Load # 300 + 75 = 375

iv. Modifications in the Plan quantity.

Modify testing and sampling protocol for increases in Plan quantities as follows (Table 7):

5-692.100- Table 7. Protocol for overrun quantities

Time Plan Quantity Increased	Testing and Sampling
Before Collection of first sample.	Reorder sampling to account for additional quantity.
After Collection of first sample, but before sampling is complete.	Complete testing of current Lot, and then reorder the sampling using the remaining quantity.
After collection of all original Plan quantity samples.	Order sampling for additional quantity.

5-692.130. Non-Random Sampling

When sampling materials for laboratory or field tests by the non-random sampling method, locate the sample in the area least likely to meet specifications. Inform the Contractor of any failure as soon as posible, but no later than 24 hours after obtaining test results. Have the Contractor remove or modify failing materials, and retest in areas which are least likely to meet specifications.

5-692.135. Sampling for Proctor (Moisture Density Test)

A. Grading Construction

Samples required for the proctor test should represent the material being placed. Fifty pounds of material is necessary for a proctor test. Each sample tested should be identified by source (pit number, pit name or station), depth, soil classification, and test results. Save a portion of

each sample from each major soil type, at about optimum moisture content, in a transparent container for use as a reference. Use Figure 31. Triaxial Chart, as a guide in soil comparison. Label this sample with the assocatied soil classification and test results.

B. Base, Subbase, and Surfacing Construction
Moisture-Density properties of base and subbase aggregates vary as the gradation of the aggregate varies.

Record the sample location.

Sample subbase, base or shouldering aggregate from one location on the road after spreading, but before compaction.

5-692.140. Splitting

5-692.141. Quartering Method of Sample Size Reduction

A. General
The quartering method of sample size reduction works best on damp material. Quarter sample on a concrete slab, new plywood or sheet metal deck or similar smooth, clean floor area, about 4’ × 4’.

B. Procedures
See Figure 4.

1. Dump the sample onto the clean floor area.

2. By shoveling, move the sample to an adjacent area and form a continuous cone by emptying the shovel directly over the center (Figure 4, Top Left).

3. Repeat the coning until the sample is thoroughly mixed.

4. With a shovel or other device, make a clean pass bisecting the cone vertically (Figure 4, Top Right).

5. Draw the halves away from each other.

6. Bisect the halves (Figure 4, Bottom Left).

7. Combine diagonally opposite quarters to form a sample (Figure 4, Bottom Right). If the sample is still larger than desired repeat Step 1 thru 7. In this case, piles B & D were combined.

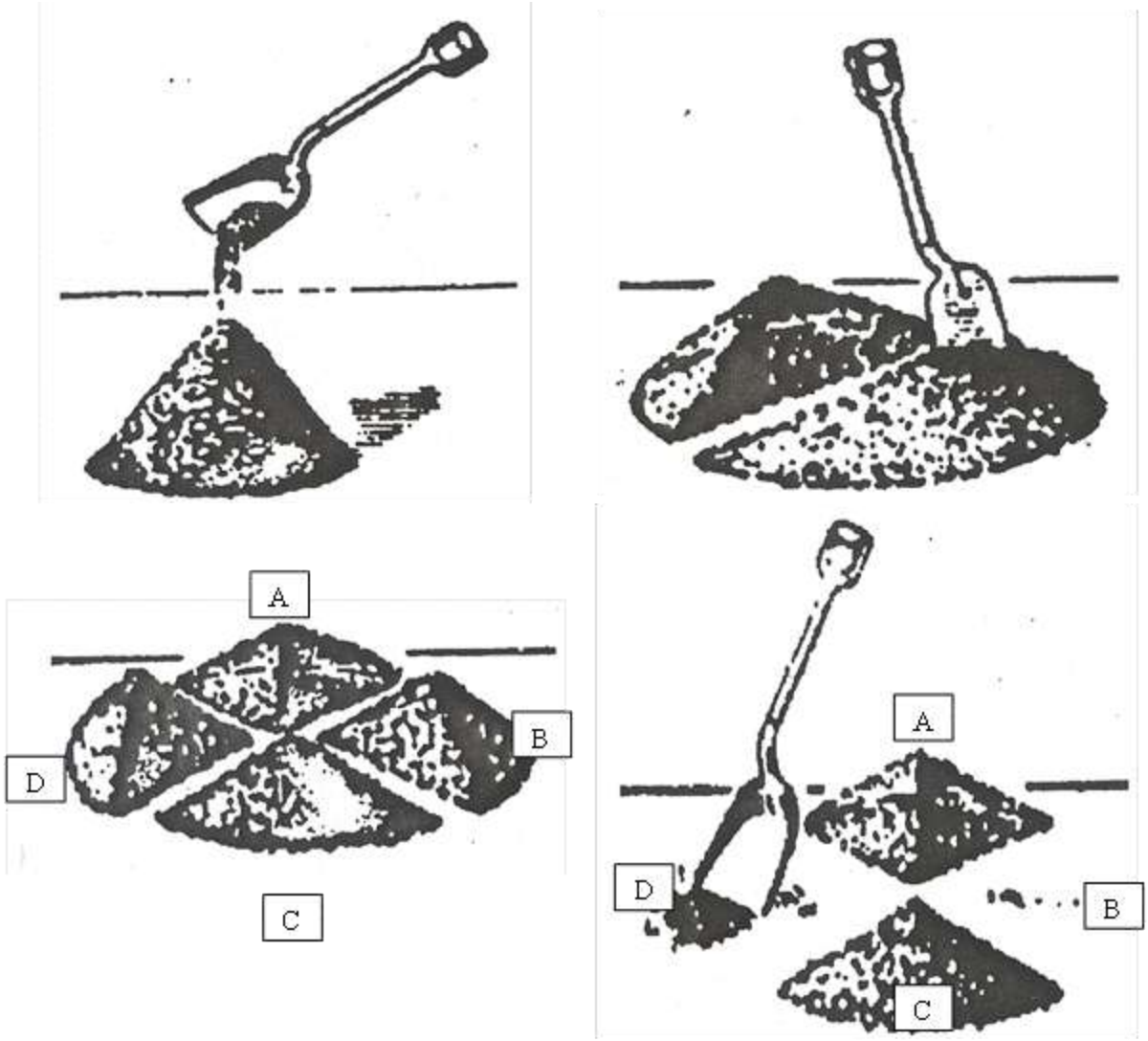

5-692.100-Figure 4. Quartering Method of Sample Size Reduction

5-692.142. Ring and Cone Method of Sample Size Reduction

A. General

The ring and cone method is usually used for large quantities of material and requires more working area than the other sample reduction methods. The radius of the ring is determined by the weight of the sample and should be equal in feet to 1/40th of the sample weight in pounds. For instance, a 400 lb. sample requires a radius of 10 ft. (20 feet in diameter).

B. Procedure

Dump the entire sample onto the clean floor area. By shoveling, move the sample to an adjacent area and form a continuous cone by emptying the shovel directly over the center. Repeat the coning until the sample is mixed thoroughly (Figure 5 (a)).

1. Place a rake or trowel at the top of the cone, push down and pull a portion of sample out to the required radius (Figure 5 (b)).

$$\text{Required Radius (feet)} = \frac{\text{Weight of Sample (lbs)}}{40 \text{ lbs per foot}}$$

2. Move to a position opposite Step 1 and repeat Step 1 (Figure 5 (c)).

3 & 4. Repeat Steps 1 and 2 at 90^0 (Figure 5 (d & e)) from the original position of Steps 1 & 2.

5. Continue Steps 1, 2, 3 and 4 (Figure 5 (f)) until the entire sample is evenly windrowed into a ring (Figure 5 (g)).

6 & 7. Collect sample by cutting the ring at opposite points with a shovel (Figure 5 (h)). (A sample consists of material removed from two or more pairs of opposite sections of the ring (Figure 5 (i)).

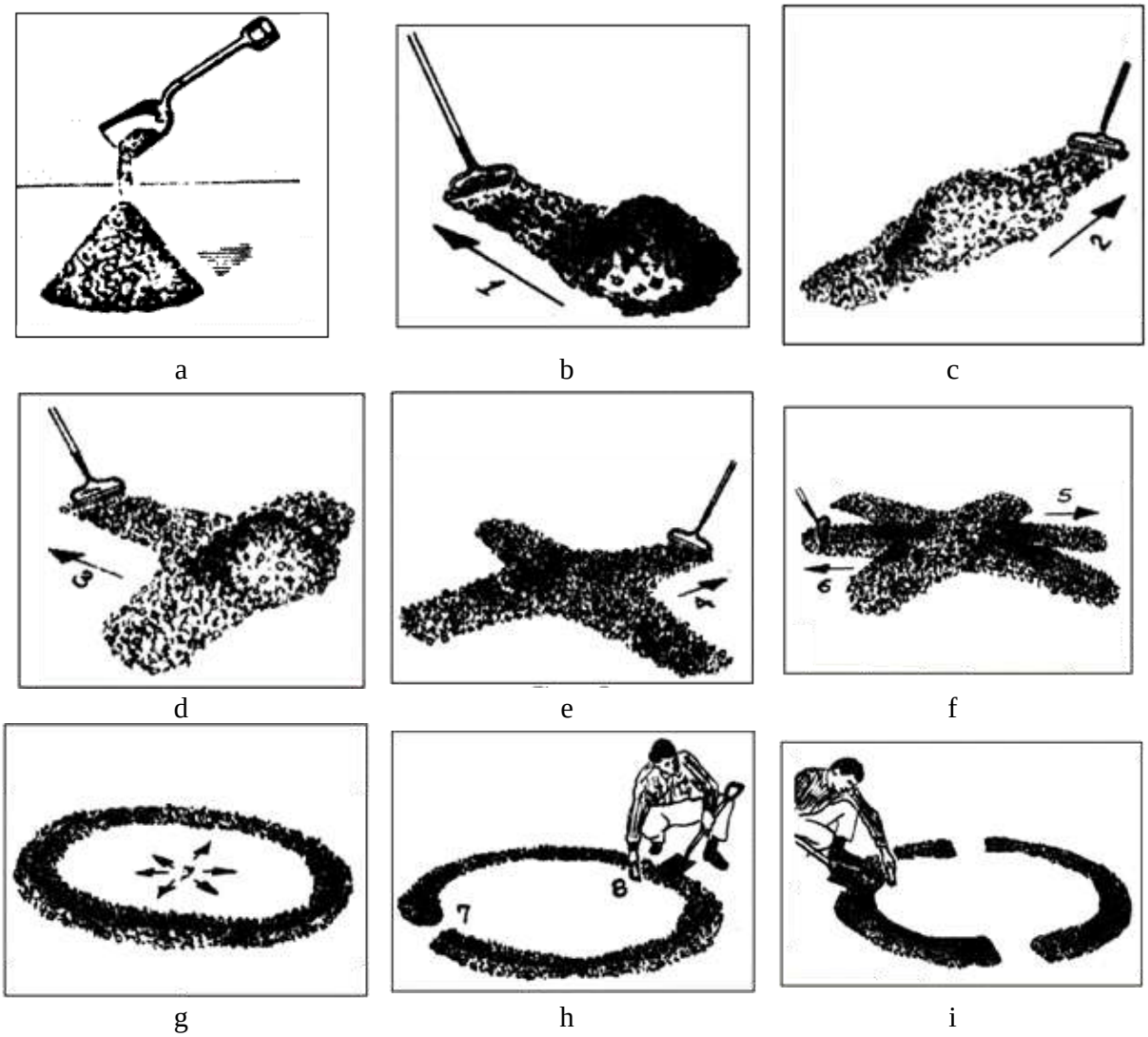

5-692.100-Figure 5. Ring & Cone Method to Reduce Sample Size

5-692.143. Riffle Splitter Method of Sample Size Reduction

A. General

A sample splitter consists of a series of chutes running in alternately opposite directions. When a sample is poured into the chutes, one-half of the sample runs off in each direction into collection pans. The sample splitter works best with air-dry material. Split the sample when the material is near optimum moisture, so that material is free flowing, and minimal dusting occurs.

B. Procedure

See Figure 6.

1. Place one collection pan on each side of the splitter allowing the chutes to extend into the pans.

2. Thoroughly blend the sample prior to splitting to reduce sample segregation.

3. Pour the sample through the chutes (Figure 6, Left), while ensuring that the sample does not pile up in the hopper.

4. Check sample for uniformity, recombine sample and repeat steps 1-3, if sample is not uniform.

5. The sample may be split into smaller sizes by re-splitting the material collected on each side of the splitter, following Steps 1 through 4 above (Figure 6, Right).

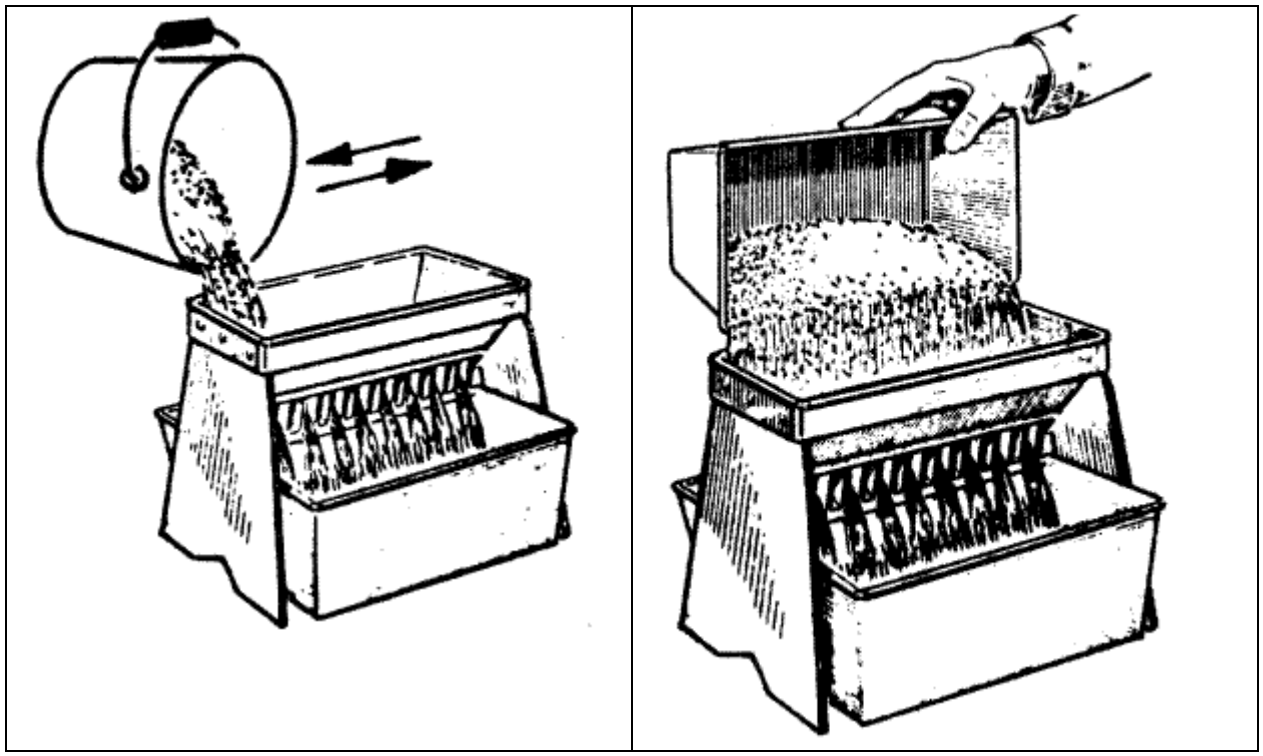

5-692.100-Figure 6. Riffle Splitter Method to Reduce Sample Size

5-692.150. Independent Assurance (IA) Sampling and Testing

Independent Assurance sampling and testing is required on all State projects that use Federal Funding. Assurance sampling is the direct responsibility of the District Materials Engineer.

The purpose of this sampling is to verify the inspector's sampling, testing procedures and equipment. The project personnel are required to notify the district materials office when any work requiring Independent Assurance sampling has begun. The project personnel should ensure that some scheduling lead time is provided.

Procedure:

The District Independent Assurance Inspector is required to review the tester's sampling, testing procedures and equipment; and to obtain laboratory samples. The Independent Assurance Inspector will record findings.

The following procedures are recommended to obtain the maximum benefit:

1. Any Independent Assurance test or sampling procedures should be performed by the project personnel assigned to that particular phase of the work.

2. The equipment used and procedures followed during Independent Assurance sampling and testing should be the same as that used during the routine sampling and testing requirement on the job.

3. If the procedure followed or equipment used does not conform to the applicable standard, note the fact on the report and advise the tester of the corrections required for subsequent tests.

4. Independent Assurance gradation test samples must be split samples from field gradation samples so that the field and lab results can be compared.

5. Report the test result and the action taken by the tester, when an Independent Assurance test is observed and the given measurement does not meet requirements.

6. If it becomes evident that a required Independent Assurance test or sample cannot be obtained, report the type of construction, sample standard involved and the reasons for not obtaining the test or sample.

Investigate any deviation, between an Independent Assurance test result and a companion test result, outside the tolerances stated in Table 1003C of the MnDOT Laboratory Manual.

5-692.160. Sample Identification Card

A. General

Samples submitted to the laboratory must contain a sample identification card properly protected against moisture and soiling. A zip-lock type sandwich bag works well.

B. Procedure for Completing Sample ID Card

1. "Field Identification"

This identifier is generated by the field inspector to assist with tracking the sample.

2. "Spec."
Include both the specification number and class of material.

3. "S.P."
Submit all the samples under the primary (state) project number (S.P.).

4. "Submitted by"
Enter the name of the submitter. If the sample is an Independent Assurance (IA) Sample, include the IA's name, and write "IA Sample" on the card.

5. "Proj. Engr."
Enter the name of the project engineer.

6. "Type of material and use"
Enter what the material is to be used for and the specification.

Example: Base (2211)
Shouldering (2221)
Subgrade Soil (2105 or 2106)

7. "Mix Proportions"
Report the composition of virgin and recycled aggregates by type (e.g., % natural gravel, % quarried carbonates, % quarried class A, % RAP, %RCP, % glass, etc.).

8. "Pit No."
Give the Pit Number for 3138 samples and the pit number (or owner's name) for 3149 samples.

9. "Source"
Provide the Pit name.

10. "Location"
Location of pit (i.e., either geographic, as in illustration, or legal description with Section, Town and Range).

11. "Sample taken from"
Stationing of sample location.

12. "Tests required"
Example: Gradation, Shale, Proctor, LA Rattler, etc.

13. "Remarks"
If it is a split gradation sample, write the field gradation results on the back of the card. Also, include any observations or information that would assist with evaluating the sample test results. Include the gradation specification requirements of sample.

5-692.170. Documentation
The Engineer is responsible for maintaining a file with the following items (Table 8):

5-692.100- Table 8. Required Documentation

Form	Description
G&B-001 [TP 02115]	Grading and Base Report (Preliminary and Final)
G&B-104 [TP 24346]	Certification of Aggregates (include all contractor gradation and quality test reports)
–	Worksheet with computations for sample locations and Lot sizes.
G&B-101 (English) or G&B-102 (Metric) [TP 02402]	Sieve Analysis (for each verification test sample)
G&B-002 [TP 02154]	Random Sampling Acceptance (for each Lot)
–	Materials Certification Project Compliance Summary
–	Documentation of Random Number Selection

5-692.180. Sampling Bituminous Stabilized Materials

A. Sampling Bituminous Materials
Sample bituminous materials per the Minnesota Department of Transportation (MnDOT) "Bituminous Manual" 5-693.

B. Moisture Samples
1. When asphalt emulsion is used, obtain a sample from the treated material at the time the mixture is ready for compaction.

2. When other bituminous materials are used, obtain a sample before the bituminous material is added.

3. Refer to the Schedule of Materials Control (SMC) for required minimum sampling and testing rates.

C. One Point Density
At each field density test location, sample for the moisture after mixing. Select 10 lbs (5 kg) samples by direct sampling and place in an air tight container to minimize loss by evaporation.

D. Bituminous Stabilized Base (SFDR) – Proctor Test using Modified Effort
Moisture-Density properties of stabilized bases vary as the gradation of the aggregate varies.

Samples required for the proctor test should represent the material being reclaimed, 50 lbs of material is necessary for a test.

Record the sample location.

Sample Materials from one location on the road after reclaiming/mixing, before compaction.

For Multi-Point Modified Effort Proctor, obtain samples from one location on the road after the initial pulverization ("*initial-grind*") to the depth of the reclaim layer prior to rolling and store in a sealed container.

For One Point Modified Effort Proctor, obtain samples from one location on the road, after the bituminous injection pass to the depth of the *stabilized* reclaim layer, and before rolling. Store in a sealed container for no more than one hour before Proctor compaction.

5-692.181. Sampling for Stabilized Full Depth Reclamation (SFDR) Mix Design
Review data from auger borings, cores and / or other sources (i.e. pavement records, FWD deflection data, etc.) to determine if more than one mix design is required. Perform a separate design for SFDR projects with more than a two inch difference in bituminous surface thickness. Sample at least 350 lbs for each mix design. Determine the individual and average thickness values for cores or slabs. Measure the density of four cores or two slabs if the bituminous materials are the primary component of the mix design.

Crush the bituminous materials to the gradation in Table 9 before blending with the aggregate. If bituminous materials consist of a chip seal only, then the only requirement is that it is crushed to 100% passing the 1 in. sieve.

5-692.100- Table 9. Requirements for Crushed Bituminous (SFDR)

Sieve Size		**Percent Passing**
1.25 in	31.25 mm	100
1 in	25 mm	90 – 100
¾ in	19 mm	80 – 97
No. 4	4.75 mm	30 – 55
No. 30	0.6 mm	5 – 15

Specimens prepared for mix design shall have a maximum size passing the 1.25 in. (31.25 mm) screen for all material components.

5-692.182. Sampling for Cold In-Place Recycling (CIR) Mix Design
Obtain cores from the areas to be recycled. Perform separate mix designs if cores show significant differences in the type or thickness of bituminous layers among the core samples. Sample a minimum of one core per lane mile and sample where there are visual differences in the pavement. Cut the sampled (field cores) in the laboratory to the depth specified for the CIR Project. Crush cores in the laboratory and perform a mix design using the medium gradation and a minimum of one of the fine or coarse gradations using Table 10.

5-692.100- Table 10. Requirements for Crushed Bituminous (CIR)

	Fine	Medium	Coarse
31.5 mm [**1.25 inch**]	100	100	100
25.0 mm [**1.0 inch**]	100	100	85-100
19.0 mm [**¾ inch**]	95-100	85-96	75-92
4.75 mm [**No. 4**]	55-75	40-55	30-45
600 μm [**No. 30**]	15-35	4-14	1-7
75 μm [**No. 200**]	1-7	0.6-3	0.1-3

Perform the mix design on these crushed millings. Determine the gradation of the crushed millings and dry at a temperature no greater than 104°F.

Prepare samples with a sample splitter, otherwise dry, screen and recombine millings to the target gradation. Suggested screens include: 1/2 inch [12.5 mm], 3/8 inch [9.5 mm], No. 4 [4.75 mm], No. 8 [2.36 mm], No. 30 [600 μm], and pan. Scalp oversize with a 1.0 inch [25.0 mm] screen when using 3.94 inch [100 mm] diameter compaction molds.

5-692.200- Methods of Testing

5-692.201. Test for Shale in Coarse Aggregate – Pick Method 36
A. Scope 36
5-692.202. Test for Shale in Fine Aggregate – Float Method 36
A. Scope 36
5-692.203. Field Test to Determine Crushing (%) - Conveyor Belt Method 36
A. Scope 36
B. Equipment 36
C. Test Sample 36
D. Procedure 37
E. Examples 37
F. Test Application 37
G. Reports 38
5-692.204. Determination of Crushing (%) - By Crushed Particle Count of + No. 4 38
A. Scope 38
B. Procedure 38
C. Example 39
D. Test Application 39
E. Reports 40
5-692.215. Sieve Analysis Test Procedure (Gradation) 41
A. Scope 41
B. Equipment 41
C. Sample 41
D.1. Coarse Sieve Procedure 42
D.2. Fine Sieve Procedure 43
E. No. 200 / 1” (75µm / 25mm) Ratio 44
5-692.216. Washing & Drying Gradation Samples Containing Salvaged Bituminous 46
A. Scope 46
B. Procedure 46
5-692.222. Moisture-Density Test Method (Proctor) 46
A. Scope 46
B. Equipment 47
C. Sample Preparation 48
D.1. Procedure: Multi-Point Proctor (Standard Method) 49

D.2. Procedure: Multi-Point Proctor (Alternate Method) ... 51
E. Calculations (Figure 10) ... 52
F. The Maximum Density and Optimum Moisture Content ... 53
G. Procedure: One-Point Proctor ... 54
5-692.231. Calibration of Sand Cone and Ring ... 64
A. Calibration Procedure ... 64
5-692.232. Calibration of Standard Sand ... 64
A. Scope ... 64
B. Procedures for Calibrating Standard Sand: ... 65
B.1. Field Method No. 1 Procedure ... 65
D.2. Field Method No. 2 Procedure ... 66
5-692.245. Moisture Test ... 67
A. Scope ... 67
B.1. Equipment for Burner Method ... 68
B.2.1. Equipment for CCGP Method: 26 gram “Speedy” Moisture Meter ... 68
B.2.2. Transporting Calcium Carbide (Speedy Moisture Tester Reagent) ... 69
B.3.1. Equipment for CCGP Method: 200 gram “Super Speedy” Moisture Meter ... 70
B.3.2. Transporting Calcium Carbide (Speedy Moisture Tester Reagent) ... 71
C.1. Procedure for Burner Method ... 71
C.2. Procedure for CCGP Method: 26 gram “Speedy” Moisture Meter ... 71
C.3 Procedure for CCGP Method: 200 gram “Super Speedy” Moisture Meter ... 73
5-692.246. Field Density Test: Sand Cone Method ... 77
5-692.247. Sampling and Inspection ... 77
5-692.248. Field Density Test Procedure ... 77
A. Scope ... 77
B. Equipment ... 77
C. Procedure: Determine the density of in-place soil ... 78
D. Calculations ... 79
5-692.251. Relative Density ... 80
A. General ... 80
B. Calculations ... 80
5-692.253. Relative Moisture ... 82
A. General ... 82
B. Calculations ... 82
5-692.255. Dynamic Cone Penetrometer (DCP) ... 84

A. General 84
B. Equipment 84
C.1 Procedure – Base Aggregate 85
C.2. Procedure: Edge Drain Trench Filter Aggregate (2502) 86
D. Maintenance and Handling 87
5-692.260. Pulverization Determination for Binder Soils 90
A. Scope 90
B. Equipment 90
C. Procedure 90
5-692.270. Test Rolling 90
A. Scope 90
B. Equipment 90
C. Procedure 91
D. Record 91
E. Test Application 91
5-692.280. Moisture-Density Test Using Modified Effort 91
A. General 91
B. Equipment 92
C. Sample Preparation 92
D. Procedure: Multi-Point (Standard Method using modified effort) 93
E. Calculations 94
F. The Maximum Density and Optimum Moisture Content 95
G. Procedure: One-Point Moisture Density (Proctor) Using Modified Effort 96
5-692.281. Moisture Test for Bituminous Stabilized Materials 97
5-692.282. In-Place Density Using Nuclear Methods 98
A. General 98
B. Equipment 98
C.1 Procedure: Backscatter 98
D. Site Preparation 99
E. Moisture Determination 99
F. Density Determination - Direct Transmission 99
G. Calculations 100
5-692.284. Measuring Grinding Depth in the Field 100
A. General 100
B. Apparatus 100

C. Procedure 100
5-692.285. Measuring Expansion Ratio and Half-Life of Foamed Asphalt in the Field 101
A. General 101
B. Equipment 101
C. Procedure 101
5-692.286-5-692.287. Measuring Field Application Rate Using Direct/Indirect Methods 102
A. Apparatus – Not Applicable (N/A) 102
B. Test Procedure 102
5-692.290. SFDR Mix Design Procedure 104
B. Material Evaluation 104
C. Selection of Water Content for Design 104
D. Number of Specimens / Mixing 104
E. Curing before Compaction 105
F. Compaction 105
G. Short-Term Strength (STS) Test 105
H. Curing after Compaction 106
I. Volumetric Measurements 106
J. Mechanical Measurements 106
K. Thermal Cracking 107
L. Emulsion Content Selection 107
5-692.291. CIR Mix Design Procedure 108
Thermal Cracking 110
Indirect tensile testing (IDT) Procedure: 110
Raveling Test Procedure on Recycled Asphalt Specimens 111

5-692.201. Test for Shale in Coarse Aggregate – Pick Method

A. Scope

1. The lithological summary method is used to determine the percentage of various rock types. This method separates shale by visual and hand sorting.

2. Follow MnDOT Laboratory Manual, Section 1209, "Lithological Count".

5-692.202. Test for Shale in Fine Aggregate – Float Method

A. Scope

1. Follow MnDOT Laboratory Manual, Section 1207, "Lightweight Pieces in Aggregate".

5-692.203. Field Test to Determine Crushing (%) - Conveyor Belt Method

A. Scope

Crushing will be required for Classes 5 and 6 Base Aggregate and for Aggregate Bedding and Stabilizing Aggregate. For these classes of aggregate, crushing will be required for all stones larger than the maximum size permitted by the gradation requirements and which will pass a grizzly or bar grate having parallel bars spaced eight inches (200 millimeters) apart. However, rejection of oversize material will be permitted by the Engineer when excessive crushing results in an unsatisfactory gradation. This test is used to determine compliance with the crushing requirements of specification 3138 at the time that the aggregate stockpile is being produced.

In the production of Class 6 aggregate, there shall be at all times not less than 15 percent of material which shall be crushed. In the production of Class 5, Aggregate Bedding and Stabilizing Aggregate, there shall be at all times not less than 10 percent of material which shall be crushed. The percentage of crushing shall be determined by the weight of the material retained on a 3/4-inch (19-millimeter) sieve.

B. Equipment

1. Containers—Pails suitable for collecting and weighing gravel samples.

2. 60 lbs (27.2 kg) capacity electronic platform scale with decimal graduations in tenths of a lb (kg) (Interpolate reading to the nearest 0.05 lbs [kg]).

3. Sieve— Nominal Maximum size for the class of aggregate being produced (3/4" [19 mm] sieve).

4. Square nosed shovel.

C. Test Sample

The sample shall be obtained at least once each day from the belt which conveys the material from the trap to the crusher. The sample shall be taken at a time when pit operations are normal. Stop the belt. Select a representative section on the belt and remove all of the material from the selected section. This sample should weigh approximately 30 lbs (15 kg).

D. Procedure

1. Air dry the sample to reduce the amount of fines that cling to the oversize material.

Note: Fines will not usually cling to the oversize material if the moisture content is approximately 3% or less.

2. Weigh the total sample (should weigh approximately 30 lbs [15 kg]). Record weight (A) on form G&B-103, "Percent Crushing Report" (Figure 7).

3. Screen the sample over the maximum required sieve size (3/4" [19mm] sieve). Use breaker sieves as needed.

4. Determine the weight of aggregate retained on the 3/4" (19mm) sieve. Record weight (B).

5. Compute percent of crushing using the following calculations:
   A = Weight of Total Sample lbs (kg)
   B = Base Aggregate, Weight Retained on 3/4" (19mm) Sieve lbs (kg)

   Crushing % = (B/A) x 100%

   E. Examples

Note: See Figure 7

Given:

- 3138 Class 5 Aggregate
- Maximum Aggregate Sieve Size = 3/4" (19 mm) sieve
- Minimum Crushing Required = 10%

Sample:

A = Weight of Total Sample = 32.74 lbs. (14.85 kg)
B = Base Aggregate, Weight Retained on 3/4" (19 mm) Sieve = 6.15 lbs. (2.79 kg)

Calculations:

$$\frac{B}{A}\times 100\% = \frac{6.15 lbs.(2.79 kg)}{32.74 lbs.(14.85 kg)}\times 100\% = 18.8\%$$

Therefore meets requirements.

F. Test Application

Due to the fact that samples for this test are taken before the final mixing of the aggregate, variations in crushing percent (%) can be anticipated. It can also be anticipated that after final mixing, has been accomplished to meet the gradation requirements that these variations will have been eliminated in the final product. For this reason, some variation can be allowed. An occasional deviation of up to 2% can be allowed. However, the average portion of crushing (expressed as a percent) of all the material tested for the project shall not be less than that specified. If a test exceeds the allowable tolerance, the contractor should be informed immediately and adjustments made to obtain the required amount of crushing by possibly adding stones or crushed rock from another source. After operations have been adjusted, a check test should be made.

G. Reports
In the remarks field on Form G&B-001 (*MnDOT TP-02115-02*) "Grading and Base Report" indicate the number of tests required, the number made and the average crushing (%).

5-692.204. Determination of Crushing (%) - By Crushed Particle Count of + No. 4

A. Scope
This method is intended to be used only when the material has been crushed into a stockpile before an inspector was assigned to the project. For the purpose of this method, crushed particles are defined as material that has at least one fractured face.

This method involves counting the particles of plus No. 4 (4.75 mm) material having one or more fractured faces and computing the percent of crushing in the total sample.

In the production of Class 6 aggregate, there shall be at all times not less than 15 percent of material which shall be crushed. In the production of Class 5, Aggregate Bedding and Stabilizing Aggregate, there shall be at all times not less than 10 percent of material which shall be crushed.

B. Procedure
1. Obtain a representative sample weighing approximately 30 lbs. (15 kg) from the prepared stockpile. Air-dry the sample to reduce the amount of fines that cling to the material.
   Note: Usually, fines will not cling to the material if the moisture content is approximately 3% or less.

2. Determine the Total Weight of Sample, record weight (A) (Figure 7).

3. Determine the sample's gradation in accordance with the method described in section, "5-692.215. Sieve Analysis Test Procedure (Gradation)" to verify that the aggregate meets specification requirements. Screen the sample and reserve the material retained on the 3/4" (19 mm), 3/8" (9.5 mm) and No. 4 (4.75 mm) sieves.

4. Determine the weight of aggregate passing the 1" (25 mm) sieve and retained on the No. 4 (4.75 mm) sieve. Record weight (B).

5. By using the following formula, compute and record the percent of aggregate retained on the No. 4 (4.75 mm) sieve (C):
   $$Percent\ \mathrm{Re}tained\ on\ No.4,\ C = \frac{B}{A} \times 100\%$$
6. Determine the weight of aggregate passing the 1" (25 mm) sieve and retained on the 3/8" (9.5 mm) sieve. Record weight (D).

7. Determine the weight of aggregate passing the 3/8" (9.5 mm) sieve and retained on the No. 4 (4.75 mm) sieve. Record weight (E).
   Note: (D) + (E) should equal (B)

8. By using the following formula, compute and record the percent of aggregate retained on the 3/8” (9.5mm) sieve (F):

   Percent Retained on 3/8”-, F = (D/B) x 100%

9. By using the following formula, compute and record the percent of aggregate passing the 3/8” (9.5mm) sieve and retained on the No. 4 (4.75mm) sieve (G):

   Percent Retained on 3/8” & retained on the No. 4, G = (E/B) x 100%

   Note: (F) + (G) should equal 100.0%

10. Combine the material retained on the 3/4” (19 mm) and 3/8” (9.5 mm) sieves. Quarter the sample (5-692.141. Quartering Method of Sample Size Reduction) to obtain a representative sample weighing about 1,500 grams. Do not attempt to select an exact predetermined weight. Record this as the Weight of Sample Passing the 1” (25 mm) sieve and retained on 3/8” (9.5 mm) (J).

11. From the sample passing 1” (25 mm) sieve and retained on 3/8” (9.5 mm) sieve (I), collect and weigh all of the particles that have at least one fractured face. Record weight (K).

12. Quarter the material which passes the 3/8” (9.5 mm) sieve and is retained on the No. 4 (4.75mm) sieve to obtain a representative sample weighing between 450 to 550 grams. Record weight (L).

13. From the sample 3/8” (9.5 mm) to No. 4 (4.75 mm) sieves, collects and weigh all of the particles that have at least one fractured face. Record weight (M).

14. By using the following formula, compute the Percent of Crushed Particles in the Total Sample (N):

$$\left[\left(\frac{K}{J}\right)\times F\times\left(\frac{M}{L}\right)\times G\right]\times\left[\frac{C}{70}\right]$$

   Note: 70 is a constant because it is assumed that 30% of the crushed material passes a No. 4 (4.75 mm) sieve.

C. Example
See Figure 7 for example.

D. Test Application
Because the samples for this test are usually taken before the final mixing of the aggregate, it can be anticipated that there will be variations in the percent of crushing.

It can also be anticipated that after final mixing has been accomplished to meet the gradation requirements that these variations will have been eliminated in the final product. For this reason, some tolerance can be allowed. An occasional deviation of up to 2% can be allowed. However, the average percent of crushing of all the material tested for the project shall not be

less than the specified percent. If a test exceeds the allowable tolerance, the contractor should be informed immediately and adjustments made to obtain the required amount of crushing by possibly adding stones or crushed rock from another source. After operations have been adjusted, a check test should be made.

E. Reports

In the remarks field on Form G&B-001 (*MnDOT TP-02115-02*) "Grading and Base Report" indicate the number of tests required, the number made and the average percent of crushing.

TP-02463 (4/2002)

Minnesota Department of Transportation
Office of Materials Engineering

Percent Crushing Report

S.P.:	Test No.	Date:	Engineer
0242-47	19	5-21-02	Minnie Daht

Contractor: Webuildem, Inc.	Aggregate Source: Yohnson Pit
Type or Class of Aggregate: Class 5 - 3138	Pit Location (Legal): #2704
Sample From: Belt & Stockpile	Size of Grizzly: 200mm

Method 1: Percent Crushing (Conveyor Belt)

(A) Weight of Total Aggregate Sample: 14.85 (kg) (lbs)

(B) Aggregate Weight Retained on 19 mm (3/4") Sieve 2.79 (kg) (lbs)

Percent Crushing (B)/(A) x 100% 18.8 %

Minimum % Crushing Required 10.0 %

Method 2: Percent Crushing (Particle Count)

	Specification's Maximun Aggregate Size 19 mm (3/4 in.)
(A) Total Weight of Sample	14.85 (kg) (lbs)
(B) Weight of Sample Ret. On 4.75 mm (#4) Sieve	4.95 (kg) (lbs)
(C) Percent Ret. On 4.75 mm (#4) Sieve = (B/A) x 100	33.3 %
(D) Weight of Sample Passing the 25 mm (1 in.) Sieve and Ret 9.5 mm (3/8 in.) Sieve	2.35 (kg) (lbs)
(E) Weight of Sample 9.5 mm (3/8 in.) to the 4.75 mm (#4) Sieve	2.60 (kg) (lbs)
(F) % Retained on 9.5 mm (3/8 in.) Sieve = D/B x 100	47.5 %
(G) % 9.5 mm (3/8 in.) to the 4.75 mm (#4) Sieve = E/B x 100	52.5 %
(H) TOTAL	100.0 %
(J) Weight of Sample Passing the 25 mm (1 in.) Sieve and Ret 9.5 mm (3/8 in.) Sieve	1508 gms
(K) Weight of Cr. Sample Passing the 25 mm (1 in.) Sieve and Ret 9.5 mm (3/8 in.) Sieve	492 gms
(L) Weight of Sample 9.5 mm (3/8 in.) to the 4.75 mm (#4) Sieve	535 gms
(M) Weight of Cr. Sample 9.5 mm (3/8 in.) to the 4.75 mm (#4) Sieve	244 gms
(N). Percent Cr. Part. In Total Sample [(K/JxF) + (M/L x G)] x [C/70]	18.8 %
Minimum % +#4 Crushed Particles Required	10.0 %

See Grading and Base Manual Fig 1M or 1 E 5-692.204

Remarks:

cc: Project File

5-692.200- Figure 7. Percent Crushing Report

5-692.215. Sieve Analysis Test Procedure (Gradation)

A. Scope

The procedure outlined below is for field laboratory tests and is a modification of AASHTO T 27. Procedures followed in Central and District Laboratories are on file at the Minnesota Transportation Department Laboratory, Maplewood, MN.

The sieve analysis or gradation test is a method of determining the particle size distribution of grading materials and base, subbase and surfacing aggregates using sieves with square openings. The gradation test is an extremely important test because it indicates many qualities of the tested material. The test results determine the acceptability of the material on the road and may be used to help control production at the pit.

Note: Gradation Tolerances

All required laboratory gradation samples shall have a field tested companion sample. Both samples must be split from the same larger sized sample. Both gradation test samples shall be of nearly equal size. All specified sieves except the No. 200 (75 µm) shall correspond within 6% of field to laboratory test results. The No. 200 (75 µm) shall correspond within 2%. Any sieves exceeding these tolerances will require immediate action to determine the cause of the "out of tolerance" problem.

B. Equipment

1. 60 lb. (27.2 kg) capacity electronic platform scale with decimal graduations in tenths of a pound (tenths of a kilogram, interpolate reading to nearest 0.05 kg).

2. Electronic scale with at least 2,500 grams capacity, sensitive and readable to 0.1 g.

3. Box sieves ("coarse sieves") and rocker. The usual sizes are 3" (75 mm), 2" (50 mm), 1" (25 mm), 3/4" (19 mm), 3/8" (9.5 mm) and No. 4 (4.75 mm). A bottom pan is furnished with each set of sieves.

4. Standard 8" diameter "fine" sieves with a fitted top and a bottom pan; the common sizes are No. 4 (4.75 mm), No. 10 (2.00 mm), No. 40 (425 µm) and No. 200 (75 µm). Two No. 200 (75 µm) sieves are required; one No. 200 (75 µm) should be "full height".

5. Sieve brushes (used on the "fine" sieves) includes one bristle (sash brush is ideal) and one brass. (Do not use the brass brush on the No. 200 (75 µm) sieve.)

6. Miscellaneous bowls, pans, and pails.

7. Stove or oven for drying.

8. Sieve shaker for fine sieves.

C. Sample

1. Obtain a sample of the material according to the procedure described in section, "5-692.100. Sampling, Random Sampling and Splitting". If necessary, reduce the size of the sample according to one of the procedures described in section, "5-692.100. Sampling,

Random Sampling and Splitting". The weight of the gradation sample depends on the amount of gravel in the sample. Consider 25 lbs. (15 kg) the minimum size sample needed for a gradation test on "gravelly" material (base, surfacing and most subbase aggregates).
Note: Samples of finer, granular materials with small amounts (less the 10%) of gravel and no large size rock may be less than 25 lbs. (15 kg) The recommended sample weights or minimum sample weights are approximate and No attempt should be made to obtain an exact predetermined weight for any sample that is to be sieved.

2. Air dry the sample to reduce the amount of fines that cling to the large particles. The sample may be cautiously dried in an oven or on the stove. Do not allow any clay balls or soil lumps to bake so hard that crumbling is difficult.

D.1. Coarse Sieve Procedure
The gradation test is divided into two parts; coarse sieve and fine sieve. (Refer to Form G&B-101 (102), *"2402, Sieve Analysis,* Figure 8*"*)

1. Set the coarse sieves on the rocker with the pan on the bottom and the sieves arranged in order from No. 4 (75 μm) to 3" (75 mm) on top.

2. Determine the tare weight of a pail and weigh the sample to the nearest 0.1 lb. (0.05 kg) on the electronic scale. Most electronic scales are equipped with a tare weight dial that can be set at zero with the pail hanging empty.

3. Record the weight in the "total wt. of sample" box on Form G&B-101 (G&B-102).

4. Pour the sample into the sieves and shake until less than 0.5% by weight passes any sieve during one minute. Do not attempt to hand fit any rocks through a sieve.

5. Examine each sieve for soil lumps and clay balls. Pulverize this material so that it passes through the sieves into the bottom pan. Never discard any clay balls from the sample.
Note: If the sample frequently contains many soil lumps or is wet and cannot be dried in a reasonable length of time, use the 3/8" (9.5 mm) sieve as the final sieve. Combine the portion of the sample retained on the No. 4 (4.75 mm) sieve with the material in the bottom pan.

6. Weigh separately the portions of the sample retained on each sieve and the material contained in the bottom pan.

7. Record each weight on Form G&B-101 (G&B-102) in column 1. The total of these weights must be within 0.2 lbs. (100 g) of the "total wt. of sample". If the "check total" is not within 0.2 lbs. (100 g) of "total wt. of sample", repeat Steps 4, 5, 6, and 7.

8. Calculate the percent of material passing each sieve. Use Form G&B-101 (G&B-102) and the following formula:

Amount Passing (%) = Total wt. of material passing sieve (size)/Total wt. of sample (lbs or kg)

D.2. Fine Sieve Procedure

1. Check the zero position of the scale. The scale must be on a level, firm base to operate accurately and reliably.

2. Select a representative sample of the material in the bottom pan by one of the methods described in section, “5-692.100. Sampling, Random Sampling and Splitting”. About 450 grams (air dry) of material passing the No. 4 (4.75 mm) sieve or 750 grams of material passing the 3/8” (9.5 mm) sieve is required for a reliable fine sieve test. Do not attempt to obtain an exact predetermined weight.
   Note: If testing materials containing salvaged bituminous, see section, “5-692.216. Washing & Drying Gradation Samples Containing Salvaged Bituminous” for proper washing and drying procedures.

3. Dry the sample to a constant weight. Record the dry weight on line B, Form G&B-101 (G&B-102). The oven temperature may not exceed 230°F (110°C). Some materials bake into hard clusters that do not break up during washing. Therefore, it is recommended that all samples be handled as described in following note.
   Note: A satisfactory way to prevent the minus No. 200 (75 μm) material from baking is to use the "matched sample" method. After completing Step 2, prepare another sample that matches the weight and moisture content of the fine sieve sample. Dry this sample and record the dry weight on line B, Fine Sieve section of Form G&B-101 (G&B-102). While the matched sample is drying, wash the representative sample; do not dry it first.

4. Place the fine sieve sample into a pan and add enough water to cover the material.

5. Stir the sample until the fine particles are in suspension.

6. Pour the dirty water onto the full height No. 200 (75 μm) sieve. Do not allow the sieve to overflow (tap the side of the sieve sharply a few times if the water does not flow through the sieve).

7. Add more water to the sample and repeat Step 5 and Step 6 until the water looks clean as it is poured onto the No. 200 sieve.

8. Rinse the material retained on the No. 200 (75 μm) sieve and wash it back into the pan containing the "clean" sample.

9. Pour off the excess water and dry the sample.

10. Allow the sample to cool, weigh it and record the weight on line C, Form G&B-101 (G&B-102).

11. Pour sample into the nest of fine sieves.

12. Shake sample until less than 0.5% by weight passes any sieve during a minute. Using a mechanical shaker, sieving time should be at least 7 minutes. Weigh the material retained on each sieve and in the bottom pan; record the weights in column 5, Form G&B-101 (G&B-102).

The check total of the individual weights, including the loss of washing, should be within 5 grams of the original dry weight (line B).

Note: The maximum weight allowed on an 8" (200 mm) wide sieve is 200 grams. Any sieve with 200 grams or more is overloaded and requires additional sieving. When it appears that the gravel being tested will regularly overload a particular sieve, obtain an intermediate size sieve (No. 8 (2.38 mm), No. 20 (850 μm), No. 30 (600 μm), or No. 100 (150 μm)) and add it to the nest to intercept part of the material. Remember to combine the material retained on the extra sieve with material retained on the sieve below it; or, note the extra sieve on the work sheet and include the material retained on it in the calculations.

13. Calculate the cumulative percent passing each sieve and round to the nearest whole percent. Follow the procedure on Form G&B-101 (G&B-102) or the formula below:

% Passing (any sieve size) = (Total wt. of material passing sieve/Total wt. of sample) x 100%

14. Multiply the percent passing each "fine" sieve by the percent passing the final coarse sieve. The fine sieve sample is a portion of the total sample; Step. 14 establishes the relationship of the fine sieve sample to the total sample. Figure 8 shows an example of a completed gradation worksheet.

E. No. 200 / 1" (75μm / 25mm) Ratio

To determine the percent of No. 200 (75 μm) material as a percent of the portion passing the 1" (25 mm) sieve for granular materials, the part passing the 1" (25 mm) and the part passing the No. 200 (75 μm) sieve should be determined and recorded as described above. The No. 200/1" (75 μm / 25 mm) ratio is then calculated as follows:

No. 200/1" = (% passing No. 200/% passing 1") x 100%

Note: Do not alter the sample by screening the material on the 1" (25 mm) sieve before splitting, conducting the field test or sending a companion sample to the laboratory. Determine the percent passing the 1" (25 mm) and the percent passing the No. 200 (75 μm) and calculate the No. 200/1" (75 μm/25 mm) ratio. Report these calculations on the back of the sample card of the companion sample.

Example:

Given: % Passing 1" (25 mm) sieve = 97.0%
% Passing No. 200 (75 μm) sieve = 15.3%

Calculate: No. 200/1" ratio = (15.3/97.0) x 100% = 15.8%

TP-02402-03 (5/200

Minnesota Department of Transportation
Office of Materials and Road Research

Work Sheet for Sieve Analysis of Granular Material

See Grading & Base Manual, Fig. 1 5-692.215

S.P.:	Date:	Test No.
2704-65	Oct. 11, 2001	Lot 1 2 of 4
Class: 3138 - Class 5	Station: 215-698	Layer: 150 mm
Total Weight of Sample: 14.1 (kg) lbs)	Tester: Grado Basaloni	

Coarse Sieves:

	(1) Indiv. Weights	(2) Sieve Size	(3) Cumulative Wts. Passing	(4) Total % Passing	Gradation Requirements
*Pass ____ Sieve, Ret. ____ Sieve					
*Pass ____ Sieve, Ret. ____ Sieve					
*Pass ____ Sieve, Ret. 25 mm Sieve	0				
*Pass 25 Sieve, Ret. 19 Sieve	0.50	25	14.00	100	100
*Pass 19 Sieve, Ret. 9.5 Sieve	3.15	19	13.50	96.4	90-100
*Pass 9.5 Sieve, Ret. 4.75 Sieve	2.50	9.5	10.35	73.9	50-90
*Pass 4.75 Sieve, Ret. Bottom	7.85	4.75	7.85	56.1	35-80
Check Total -	14.00	- Shall Check Total Wt. Within 0.1 kg (0.2lbs)			

*Enter necessary sieve sizes for class of material to be tested.
Column (1) Enter weights of material between each set of sieves individually.
Column (2) Enter the passing sieves size.
Column (3) Add column (1) from the bottom up to get cumulative weights passing each sieve.
Column (4) Divide column (3) by check total of sample to get total % passing.

Fine Sieves:

(A) Take two samples identical in condition and damp weight from "passing 4.75 mm material".
(B) Dry on sample and record weight. 510.8
(C) Wash and dry other sample and record weight. 473.4
(D) Loss in washing (B-C) (Enter Below) 37.4

	(5) Indiv. Weights	(6) Sieve Size	(7) Cumulative Wts. Passing	(8) Cum. % Passing	(9) % Passing of Total Pass.	Gradation Requirements
*Pass ____ Sieve, Ret. ____ Sieve						
*Pass ____ Sieve, Ret. ____ Sieve						
*Pass ____ Sieve, Ret. ____ Sieve						
*Pass 4.75 Sieve, Ret. 2 mm Sieve	82.2	4.75	510.0	100	56.1	
*Pass 2 Sieve, Ret. 425 µm Sieve	183.8	2	427.8	83.9	47.1	20-65
*Pass 425 Sieve, Ret. 150 µm Sieve	158.0	425	244.0	47.8	26.8	10-35
*Pass 150 Sieve, Ret. 75 µm Sieve	42.0	150	86.0			
*Pass 75 µm Sieve, Ret. Bottom	6.6	75	44.0	8.6	4.8	3-10
Loss by washing-	37.4					
Check Total -	510.0	- Shall Check total Wt. Within 5 grams				
Percent Passing 75 µm (#200) Sieve Divided by Percent Passing 25 mm (1 in.) Sieve (if specified)						—

Column (5) Enter weights of material between each set of sieves and loss by washing (DO NOT OVERLOAD SIEVES)
Column (6) Enter the passing sieve size.
Column (7) Add column (5) from bottom up to get cumulative weights passing each sieve. Be sure to add loss by washing to weight of material of material passing 75 µm (#200) sieve to get first entry at bottom of column (7).
Column (8) Divide column (7) by check total dry weight of fine sample (Column 5) to get cumulative % passing.
Column (9) Multiply column (8) by % passing final sieve from column (4) to get "Percent Passing" based on total sample.

CC: Project File

5-692.200-Figure 8. Sieve Analysis Work Sheet Example (Form G&B-101 or 102)

5-692.216. Washing & Drying Gradation Samples Containing Salvaged Bituminous

A. Scope

The following procedure is to wash and dry samples containing salvaged bituminous material for gradation testing, ("5-692.215. Sieve Analysis Test Procedure (Gradation)").

B. Procedure

1. Dry the sample to a constant weight at a temperature not to exceed 140ºF (60ºC) or use the "matched sample" method described in, "D.2. Fine Sieve Procedure", in section, "5-692.215. Sieve Analysis Test Procedure (Gradation)". Constant weight is defined as no change greater than 0.5 grams in 15 minutes.

2. If necessary, soak the sample in suitable detergents or dispersants for a time period and at concentration levels sufficient to remove the oily film from the virgin fraction of the sample.
   Note: The concentration of the detergent/dispersant shall not be so harsh so as to break down the film of asphalt on the particles of salvaged asphalt pavement.

3. Wash the sample through the No. 200 (75 µm) sieve as above or in accordance with section, "5-692.215. Sieve Analysis Test Procedure (Gradation)".

4. Dry the sample in accordance with the following methods:

5. In an oven at temperature not to exceed 140ºF (60ºC) overnight.

6. Over a hot plate or stove-top electric burner using a sand bath having a minimum depth of 1.5" (37.5mm). Control the temperature of the sand to prevent the drying sample from exceeding 140ºF (60ºC). Stir the sample occasionally in the early drying stages and continuously as the sample approaches a constant weight.

7. Cool and sieve the sample in accordance with the established procedures in section, "5-692.215. Sieve Analysis Test Procedure (Gradation)".

5-692.222. Moisture-Density Test Method (Proctor)

Note: Moisture-Density Test (Proctor) Tolerances

All required laboratory Proctor samples shall have a field tested companion sample. Both samples must be split from the same larger sized sample. The field and laboratory Proctor test samples shall be of nearly equal size after splitting. Both **maximum density** tests shall correspond within **3 lbs./ft.^{3} (50kg/m^3)** from field to laboratory test and both **optimum moisture** tests shall correspond within 2%. Any testing exceeding these tolerances requires immediate action to determine the cause of the "out of tolerance" problem.

A. Scope

This Moisture Density Test (Proctor) is a method of determining the relationship between the moisture content and the density of the grading soil, base or subbase aggregate when compacted by following a standard procedure. This method is consistent with AASHTO T 99, Method C.

The Maximum Density is the highest dry density that can be obtained by varying the moisture contents and compacting the material by following a standard procedure. The Optimum Moisture content is the moisture content (expressed as percent of dry weight) of the soil, base or subbase aggregate at the Maximum Density. When compaction is controlled by the Specified Density Method, the moisture content of the soil or aggregate being placed is compared to the Optimum Moisture Content (OMC) and the density of the in place compacted material is compared to the Maximum Density to determine compliance with the specification requirements. The moisture content of the soil or aggregate compared to the Optimum Moisture content of the same soil indicates the amount of compactive effort needed to achieve the Specified Density. A soil with a moisture content lower than the Optimum Moisture requires more compactive effort than the same soil with a moisture content near "optimum". Soils with moisture contents higher than "optimum" tend to be unstable and may be impossible to compact.

When the Quality Compaction Method is required, knowledge of the optimum moisture and maximum density for the material helps the inspector determine the moisture necessary for proper compaction.

B. Equipment

1. Proctor mold: A cylindrical metal mold having a capacity of 1/30 ft^3 (1/1,060th m^3) with an internal diameter of 4 inches (101.6 ± 0.406 mm) and a height of 4.584 ± 0.006 inches (116.43 ± 0.1270 mm). The mold shall have a detachable collar assembly and base plate (Figure 9, a).

2. Rammer Metal rammer having a flat circular face of 2 inch (50.8 ± 0.127 mm) diameter and weighing 5.5 lbs. (2.495 ± 0.009 kg). The rammer shall be equipped with a guide sleeve to control the height of drop to a free fall of 12 inches (304.8 ± 1.524 mm) above the soil. (Figure 9, c).

3. Electronic platform scale: The platform scale shall have a minimum capacity of 30 lbs. (14 kg); it shall be sensitive to 0.01 lb. (one gram) and the minor graduations on the indicator shall be 0.01 lb. (one gram).

4. Electronic scale shall have a minimum capacity of 2500 g; and it shall be accurate to 0.1 g.

5. Drying oven or stove.

6. Mixing tools (Figure 9, b).

7. Spatula and butcher knife. (Figure 9, b).

8. Box sieves, 2" (50 mm), 3/4" (19 mm), 3/8" (9.5 mm) and No. 4 (4.75 mm) with bottom pan.

9. Concrete compaction base. A block of concrete weighing not less than 100 lbs. (50 kg) supported on a stable foundation; a sound concrete floor or other solid surface found in concrete box culverts, bridges and pavement. See Figure 9 for typical test equipment set up.

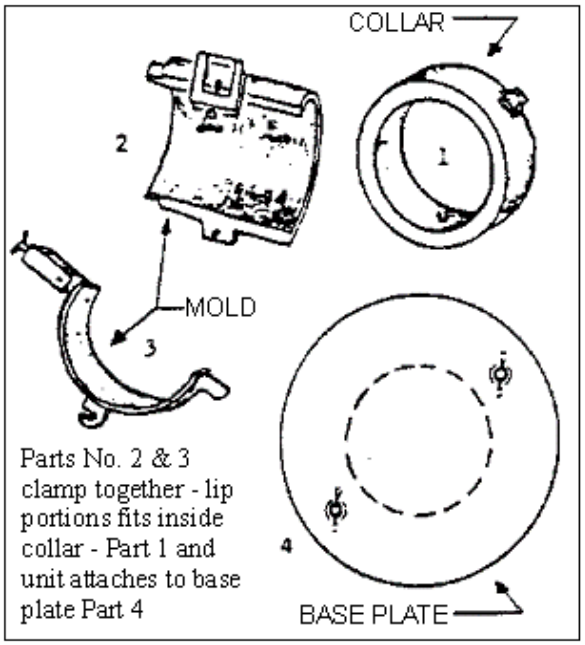

a. Mold & Base Plate

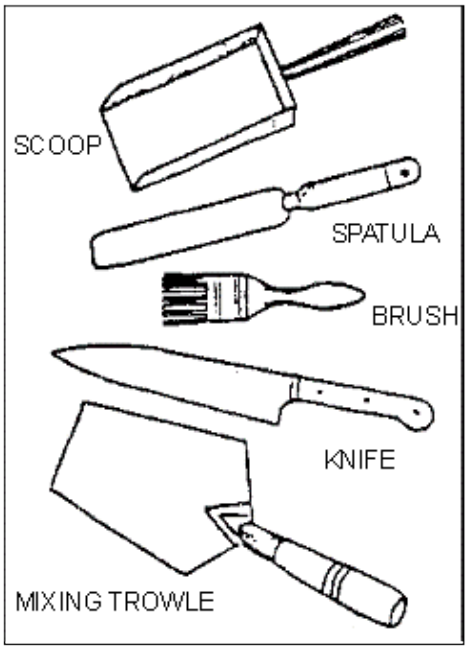

b. Tools

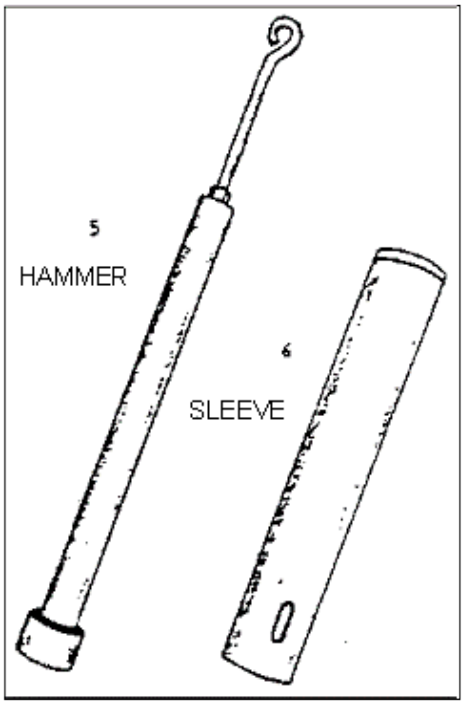

c. Hammer & Guide Sleeve

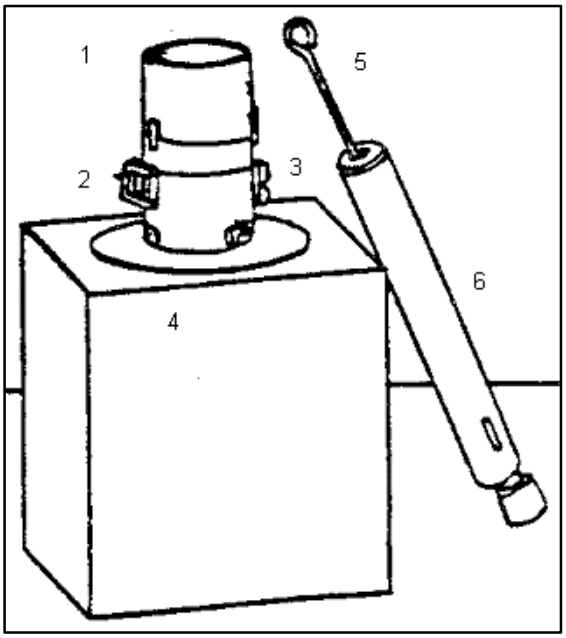

d. Typical Equipment Set-Up

5-692.200- Figure 9. Equipment for Proctor Test

C. Sample Preparation

1. Obtain a sample of the soil or aggregate according to the procedures described in section, “5-692.135. Sampling for Proctor (Moisture Density Test)”.

2. If the soil sample is damp, dry it until it becomes friable under a trowel. The sample may be air dried or dried in the oven or on the stove such that the temperature does not exceed 140ºF (60ºC).

3. Sieve an adequate quantity of the sample over the 2" (50 mm), 3/4" (19 mm), 3/8" (9.5 mm) and No. 4 (4.75 mm) with bottom pan. Break up all soil lumps to pass the sieves.

4. Discard the stones retained on the 2" (50 mm) sieve.

5. Weigh the stones that pass the 2" (50 mm) sieve and are retained on the 19 mm sieve.

6. Discard the stones retained on the 3/4" (19 mm) sieve and replace them with an equal weight of stones passing the 3/4" (19 mm) sieve and retained on the No. 4 (4.75 mm) sieve.
   Note: The replacement material may be obtained from the remaining portion of the sample, a companion sample or completed gradation sample.

7. If the sample contains soil lumps and clay balls, pulverize them so they pass through the No. 4 (4.75 mm) sieve.
   Note: When a large portion of the sample consists of lumps, use a 3/8" (9.5 mm) sieve as well as the No. 4 (4.75 mm).

8. Recombine any stones retained on the 4.75 mm (and 9.5 mm) sieve(s) with the pulverized material in the pan.

9. Select about 12 lbs. (5 kg) of the prepared material using a procedure described in section:
   - "5-692.141. Quartering Method of Sample Size Reduction", or
   - "5-692.142. Ring and Cone Method of Sample Size Reduction", or
   - "5-692.143. Riffle Splitter Method of Sample Size Reduction"

D.1. Procedure: Multi-Point Proctor (Standard Method)

This test consists of compacting a portion of a soil sample in a mold at different moisture contents ranging from dry to wet. **At least 4 samples** will be run. The samples will differ in moisture content by one to two percent with the driest sample being about four percentage points below optimum moisture. This would result in two of the samples being below optimum, one near optimum and one over optimum. A valid test will have 2 points below optimum.

1. Thoroughly mix the selected representative sample with sufficient water to dampen it to approximately 4 percentage points below optimum moisture content.
   Note: To estimate the starting point for granular soils (less than 20% passing the No. 200 (75 µm) sieve), moisten and mix the soil until it can be squeezed into a ball or "cast". The cast should crumble easily when touched. Soils with more than 20% passing the No. 200 (75 µm) sieve usually have higher optimum moisture than granular soils and the cast is less easily crumbled at the starting point.

2. Determine the weight of the mold and base plate. Record the weight as "B Wt. Mold" Figure 10. Do not include the weight of the collar.

3. Place the assembled mold, including collar, on the concrete compaction base.

4. Place enough of the sample into the mold for one layer.

   Note: The mold is filled with three equal layers of compacted material. After compaction, the top layer should be about 1/2" (15 mm) over the top of the mold when the collar is removed.

5. Compact the loose material by 25 uniformly distributed blows from the rammer dropping freely from a height of 12" (305 mm) above the soil.

6. Repeat Steps 4 and 5 until the three layers are placed and compacted.

7. Remove the collar and carefully trim the compacted soil with the knife until it is even with the top of the mold (check with the spatula). Remove any stones dislodged by trimming and fill the holes by carefully pressing finer material into place. Trim around any stones that are at least half buried and solidly seated.

8. Clean all the loose material from the mold and base plate and weigh it on the platform scale to the nearest gram. Record the weight as "A Wt. Wet Soil + Mold".

9. Remove the mold from the base plate and loosen the locking devices so that the compacted material can be removed from the mold.

10. Quarter the compacted material by slicing twice vertically through the compacted soil. Select one of the quarters and weigh immediately. Conduct the moisture determination according to the procedures listed in section, "5-692.245. Moisture Test".
    Note: A representative sample must consist of nearly equal portions of material from all three layers. When the "Speedy" method is used, take the sample the same way as the burner dry method and use a representative portion for the moisture determination.

11. Thoroughly break up any remaining portion of the molded specimen and add it to the sample being tested.

12. Add enough water to increase the moisture content about two percentage points.
    Note: 90 cc, mls or grams of water will increase the moisture content of 10 lbs. (4.4 kg) of material about two percentage points. Additional water may be needed to replace moisture lost by evaporation during mixing.

    Note: In each repetition the material shall be thoroughly mixed before compaction to assure uniform dispersion of the moisture throughout the sample.

13. Repeat Steps 4 thru 12 until the "Wt. Wet Soil + Mold" determined in Step 8 either decreases or fails to increase. At this point the compacted material should be soft and spongy; granular material may not be very spongy but will be extremely wet. The spongy condition indicates that the moisture content of the sample exceeds optimum.

D.2. Procedure: Multi-Point Proctor (Alternate Method)
The above procedure is satisfactory in most cases. However, if the soil is fine grained, cohesive and difficult to break up and mix with water or if the material is fragile and will reduce significantly in grain size due to repeated compaction, use the following procedure:

1. Prepare the sample as outlined in, "C. Sample Preparation", Steps 1 thru 8.

2. Select about 25 lbs. (11 kg of the prepared material using a procedure described in sections:
   - "5-692.141. Quartering Method of Sample Size Reduction", or
   - "5-692.142. Ring and Cone Method of Sample Size Reduction", or
   - "5-692.143. Riffle Splitter Method of Sample Size Reduction"

3. Moisten or dry the sample to about four percentage points below the estimated optimum moisture, see "Note" in, "D.1. Procedure: Multi-Point Proctor (Standard Method)".

4. Divide the sample into four or five portions of about 5 lbs. (2.2 kg) each.

5. Place one portion into a water tight container, cover, set aside, and mark as "point No. 1".

6. Add enough water to one of the remaining portions to increase the moisture content about two percentage points. (45 mls., cc or grams of water added to 5 lbs. (2.2 kg) of material will increase the moisture content 2.0 percent.) Place this portion in a container and mark as "point No. 2".

7. Continue this process with the remaining two or three portions and increase the amount of water each time until there is a series of points at about 2, 4, 6, and 8 percentage points over "point No. 1". At least one "point" should exceed the estimated optimum moisture.

Example: A clay loam soil is to be tested. It is coming from the cut of about 20% moisture. The estimated optimum moisture is about 18%. It is necessary to dry the soil to about 8% moisture before it can be pulverized. After the soil is pulverized, the inspector mixes 25 lbs. (11 kg) of soils with enough water (450 cc) to bring it to about 12% moisture. The inspector divides the sample into five samples. weighing about 5 lbs. (2.2 kg) each, and places them into concrete cylinder molds labeled "point No. 1", "point No. 2", etc. "Point No. 1" is covered and set aside. He adds 45 cc of water to No. 2, 90 cc to No. 3, 135 cc to No. 4 and 180 cc to No. 5, mixes, covers and sets them aside.

8. Allow the covered material to "soak" in the molds overnight (twelve hours minimum) to permit the moisture to disperse through the soil.

9. Compact each portion following Step 2 through 10 of the Standard Method.
   Note: If heavy clay or organic soils exhibiting flat enlongated curves are encountered, the water content increments may be increased to a maximum of 4 percent.

E. Calculations (Figure 10**)**

1. Wet Density

   A = Wt. Wet Soil + Mold lbs. (kg)
   B = Wt. Mold kg
   C = Wt. Wet Soil (A B)
   D_{metric} = Wet Density, kg/m^3 (C x 1059.43)
   $D_{English}$ = Wet Density, pcf, lbs/ft^3 (C x 30)

   Note: 1059.43 = Number of Mold Castings per m^3, and
   30 = Number of Mold Castings per ft^3

English Example:
A = 16.44 lbs.
B = 12.41 lbs.
C = 16.44 – 12.41 = 4.03 lbs.
D = 4.03 × 30 = 120.9 lbs/ft^3

Metric Example:
A = 7.46 kg
B = 5.63 kg
C = 7.46 - 5.63 = 1.83 kg
D = 1.83 x 1059.43 = 1939 kg/m^3

2. Percent Moisture (Burner Method)

   E = Wt. Wet Soil + Pan grams
   F = Wt. Dry Soil + Pan grams
   G = Wt. Moisture (E - F)
   H = Wt. pan, grams
   I = Wt. Dry Soil (F - H)
   J = % Moisture Wet Weight = [G/(E – H)] x 100%
   K = % Moisture Dry Weight = (G/I) x 100%

Example:
E = 385.6 grams
F = 350.2 grams
G = 385.6 - 350.2 = 35.4 grams
H = 93.8 grams
I = 350.2 - 93.8 = 256.4 grams
K = (35.4/256.4) x 100 = 13.8%

3. Percent Moisture (Speedy Method)

If the % Moisture, Wet Wt. (J) is recorded, determine and record the % Moisture, Dry Wt. (k) by using Table 13 or the following formula:

$$K = \frac{J}{[1 - (J/100)]} = 100 \text{ x } J/(100\text{-}J)$$

Example:

J = 12.3 (gauge reading from Speedy Moisture Meter)

$$K = \frac{100 \times 12.3}{100 - 12.3} = \frac{1230}{87.7} = 14.0\%$$

4. Dry Density
   L = Dry Density, lbs/ft^3 (kg/m^3) = [D/(100 + K)] x 100%

Example:
English: L = [120.9/(100 + 13.8)] x 100 = 120.9/113.8 x 100 = 1.062 x 100 = 106.2

Metric: L = [1939/(100 + 13.8)] x 100 = 1939/113.8 x 100 = 17.038 x 100 = 1704

F. The Maximum Density and Optimum Moisture Content
The Maximum density and optimum moisture are determined by graphing the information obtained by compacting the samples at various moisture contents. Each moisture content relates to a wet density and to a dry density.

5-692.200- Table 11. English Example: (Figure 10)

	Point				
	No. 1	**No. 2**	**No. 3**	**No. 4**	**No. 5**
D. Wet Density	120.9	124.2	126.9	126.9	124.2
K. % Moisture	13.8	15.0	17.0	18.2	19.7
L. Dry Density	106.2	108.0	108.5	107.4	103.8

5-692.200- Table 12. Metric Example: (Figure 10)

	Point				
	No. 1	**No. 2**	**No. 3**	**No. 4**	**No. 5**
D. Wet Density	1939	1992	2034	2034	1992
K. % Moisture	13.8	15.0	17.0	18.2	19.7
L. Dry Density	1702	1732	1738	1721	1664

Important Notice: The drawing of the "wet" curve is not required if the laboratory tester has compacted four adequate points as described previously. But, if the "wet" curve is not drawn, the "dry" curve must be computer generated. All discrepancies between companion samples shall be resolved by plotting the "wet" curve by hand and interpolating the "dry" curve points as shown below.

1. Plot the wet densities against the moisture contents on a Form G&B-901 (2430) (Figure 11).

2. Draw a smooth curve thru the plotted points (Figure 11). This is the "wet curve".

3. Plot the dry densities against the moisture contents (Figure 11). Additional "dry points" may be interpolated from the "wet curve".

Example: In Figure 11, Points P & PP are used to establish points P1 & PP1 on the dry curve.

English:
D. (Wet Density) for Point P = 125.0 lbs/ft^3
K. (Moisture) for Point P and P1 = 15.4%.
L. (Dry Density) for point P1 = [125.0/(100 + 15.4)] x 100 =108.3 lbs/ft^3
and
D. (Wet Density) for Point PP = 126.2 lbs/ft^3
K. (Moisture) for Point PP and PP1 = 16.2%.
L. (Dry Density) for point PP1 = [126.2/(100 + 16.2)] x 100 = 108.6 lbs/ft^3

4. Draw a smooth curve thru the plotted points. (Figure 11). This is the "dry curve".

5. Read the maximum density and optimum moisture from the peak of the "dry curve" (Figure 11). Maximum Density = 108.6 lbs/ft^3; Optimum Moisture = 16.2%.

Note: Figure 11 is an example of computer generated Proctor curves and does differ slightly from the hand drawn version of Figure 11.

Metric:
D. (Wet Density) for Point P = 2003 kg/m^3
K. (Moisture) for Point P and P1 = 15.4%.
L. (Dry Density) for point P1 = [2003/(100 + 15.4)] x 100 =1736 kg/m^3
and
D. (Wet Density) for Point PP = 2022 kg/m^3
K. (Moisture) for Point PP and PP1 = 16.2%.
L. (Dry Density) for point PP1 = [2022/(100 + 16.2)] x 100 =1740 kg/m^3

4. Draw a smooth curve thru the plotted points. (Figure 11). This is the "dry curve".

5. Read the maximum density and optimum moisture from the peak of the "dry curve" (Figure 11). Maximum Density = 1740 kg/m^3; Optimum Moisture = 16.2%.

G. Procedure: One-Point Proctor

Use this method for determining the standard maximum density and optimum moisture on grading soils only and never on base or subbase aggregates. Also, this method is for field testing only. Never use the one-point Proctor method in lieu of a "multi-point" moisture-density test on a Project's major grading soil. Use the one-point method to analyze subtle changes occurring between major grading soils. Slight changes in color, texture, structure,

etc., section, “5-692.600. Soil Classification Introduction”, may indicate these changes. Also, use one-point Proctors to verify changes in maximum density and optimum moisture indicated by relative densities (sand cone tests) failing to meet specified density requirements even though operations have not changed and previous tests have passed. Relative density tests exceeding 106 percent suggest zero air voids and indicate a possible change in maximum density. Run a one-point Proctor to confirm the suspected change. Use the "multi-point" moisture density test for the material closest to the soil with this subtle change to check the testing accuracy of the one-point Proctor. A reasonable variation should not exceed plus or minus 3 lbs/ft^3 (50 kg/m^3). If the variation exceeds 3 lbs/ft^3 (50 kg/m^3), run another "multi-point" Proctor.

1. Obtain a representative sample of soil from the fill area per section, “5-692.135. Sampling for Proctor (Moisture Density Test)”.
   Note: 3 to 6 lbs. (1.5 to 3 kg) of “minus No. 4 (4.75 mm)” material is usually enough to complete the test; however, it may be necessary to take much more than 6 lbs. (3 kg) to have a ”representative" sample.

2. Sieve the sample through a No. 4 (4.75 mm) sieve. If it is necessary to dry the sample, do not allow it to become “oven” or “stove” dry. Be sure to pulverize all clay lumps.

3. Weigh the stones retained on the No. 4 (4.75 mm) sieve, record the weight and discard the stones.

4. Weigh the portion of the sample passing the No. 4 (4.75 mm) sieve. Record the weight.

5. Calculate the percent of the sample retained on the No. 4 (4.75 mm) sieve as follows:

$$C = \frac{A}{A+B} \times 100\%$$

C = % retained on the 4.75 mm sieve.
A = Wt. of plus 4.75 mm material (Step 3)
B = Wt. of minus 4.75 mm material (Step 4)

English Example:
A = 997.9 g
B = 4422.5 g

Metric Example:
A = 997.9 g
B = 4422.5 g

$$C = \frac{997.9}{997.9 + 4422.5} \times 100\%$$

6. Reduce the size of the minus No. 4 (4.75 mm) portion of the sample to about 6 lbs. (3 kg) per section, “5-692.140. Splitting” or section, “5-692.141. Quartering Method of Sample Size Reduction”

7. Add water to the reduced sample and mix thoroughly until the material is damp enough to compact well; do not add so much water that the soil becomes "spongy" when compacted.

8. Determine the weight of the mold and base plate. Record the weight.

9. Place the assembled mold, including the collar, on the compaction base.

10. Scoop enough material into the mold for 1 layer.
    Note: The mold is filled with 3 equal layers of compacted material; the top layer, after compaction, should be about 1/2" (15 mm) over the top of the mold when the collar is removed.

11. Compact the loose material with 25 evenly distributed blows with the rammer dropped from 12" (300 mm).

12. Repeat Steps 10 and 11 until 3 layers are inplace.

13. Remove the collar and trim the compacted material with a knife until even with the top of the mold. (Check with a spatula.)

14. Brush all loose material from the mold and base plate and weigh the mold to the nearest gram on the platform scale. Record the weight.

15.1 Calculate the wet weight per cubic foot of the compacted material.
F = 30 (D - E)
F = Wet wt. per ft^3
D = Weight of wet soil and mold (Step 14).
E = Weight of the mold (Step 8).

Example:
D = 16.71 lbs., E = 12.50 lbs.
F = 30 (16.71 – 12.50)
F = 126.3 lbs/ft^3

15.2 Calculate the wet weight per cubic meter of the compacted material.
F = 1059.43 (D - E)
F = Wet wt. per m^3
D = Weight of wet soil and mold (Step 14).
E = Weight of the mold (Step 8).

Example:
D = 7.58 kg, E = 5.67 kg
F = 1059.43 (7.58 - 5.67)
F = 2024 kg/m^3

16. Remove the mold from the base plate and loosen the locking devices so the compacted material can be removed from the mold.

17. Select a representative sample for a moisture test. Conduct the test according to section, "5-692.245. Moisture Test" and record the results.

18. Using the Typical Moisture Density Curves (Figure 13 and Figure 14) determine the optimum moisture and maximum density of the minus No. 4 (4.75 mm) material.

    Example (English):
    Given: Wet wt. per ft^3 = 126.3 lbs. (Step 15)
    Moisture = 14.1% (Step 17).

    Example (Metric):
    Given: Wet wt. per m^3 = 2024 kg (Step 15)
    Moisture = 14.1% (Step 17).

    Follow the horizontal line representing the wet weight (126.3 lbs., 2024 kg) across the chart until it intersects the vertical line representing the moisture (14.1%). The Typical Curve lying nearest the point of intersection ("M") represents the maximum density and optimum moisture of the minus 4.75 mm material. For curve M, the maximum dry density is 112.0 lbs/ft^3 (1794 kg/m^3) and the optimum moisture is 15.8%.

19. If the amount of plus 4.75 mm material determined by Step 5 exceeds 5%, the maximum density and optimum moisture of the minus 4.75 mm material must be adjusted to account for the plus 4.75 mm portion of the representative sample. The density is adjusted by the following calculation:

    H = (1.0 - C) G + 2384(C)
    H = Maximum Density of the total sample.
    G = Maximum Density of the minus No. 4 (4.75 mm) portion.
    C = % retained on the No. 4 (4.75 mm) sieve, expressed as a decimal.

Example (English):
Given:
G = 112; C = 18% = 0.18
H = (1.0 - 0.18) 112.0 + 148.8 (0.18)
H = 118.6 lbs/ft^3

Example (Metric):
Given:
G = 1794; C = 18% = 0.18
H = (1.0 - 0.18) 1794 + 2384 (0.18)
H = 1900 kg/m^3

The Optimum Moisture is adjusted by the following calculation:
J = 2(C) + (1.0 - C) I
J = Optimum Moisture of the total sample.
I = Optimum Moisture of the minus No. 4 (4.75 mm) portion.
C = % retained on the No. 4 (4.75 mm) sieve, expressed as a decimal.

Example:

Given:

$I = 15.8\%; C = 18\% = 0.18$

$J = 2(0.18) + (1 - 0.18)15.8$

$J = 13.3$

English: The Standard Maximum Density and Optimum Moisture for the sample selected in Step. 1 is 118.6 lbs/ft^3 and 13.3%.

Metric: The Standard Maximum Density and Optimum Moisture for the sample selected in Step. 1 is 1900 kg/m^3 and 13.3%.

TP-24587-01 (3/13/02)

Minnesota Department of Transportation

Office of Materials and Road Research

Calculation for Moisture - Density Relationships in Subgrade Soils and Aggregate Base and Shoulders

Units Metric

Sample No: 7	Curve No: 3	Date: 7-10-01
		S. P. No: 1403-09

Optimum Moisture (M_0 16.2 %

Maximum Density (Dt) 108.6 kg/m³ (lb/ft³)

A - Wt. Wet Soil + Mold	16.44	16.55	16.64	16.64	16.55
B -Wt. Mold	12.41	12.41	12.41	12.41	12.41
C - Wt. Wet Soil	4.03	4.14	4.23	4.23	4.14
D - Wet Density kg/m³ (lb/ft³)	120.9	124.2	126.9	126.9	124.2
- Burner Method -					
E - Wt. Wet Soil + Pan	385.6	408.1	378.1	383.8	381.2
F - Wt. Dry Soil + Pan	350.2	367.1	336.8	339.2	333.8
G - Wt Moisture	35.4	41.0	41.3	44.6	47.4
H - Wt Pan	93.8	94.1	93.6	94.2	93.4
I - Wt. Dry Soil	256.4	273.0	243.2	245.0	240.4
- Speedy Method -					
Dial Reading - Sample Size					
J - % Moisture - Wet Wt.					
K - % Moisture - Dry Wt.	13.8	15.0	17.0	18.2	19.7
L - Dry Density kg/m³ (lb/ft³)	106.2	108.0	108.5	107.4	103.8

Calculations: C= A-B:, D= (1059.43)C (M) or D=(30)C (E) See Grading and Base Manual Fig 5 5-692.222 (M)

G=E - F; I=F-H See Grading and Base Manual Fig 5 5-692.222 (E)

K=G/Ix100 or K=J/(I-J/100) L=(D/100+K)100

Remarks; % Ret. 4.75 mm (#4) _____ M_f _____ D_f _____

Soils Class SiCL

Tester Cory Atfe

cc:Project File

5-692.200-Figure 10. Example Proctor Calculation Worksheet

Minnesota Department of Transportation
Office of Materials and Road Research

TP-02430-03 (6/2002)

Moisture-Density Relationship

Sample No: 7 Date: 7-10-01 Tester: Cory Afte
Curve No: 3 Soil Class: SiCL

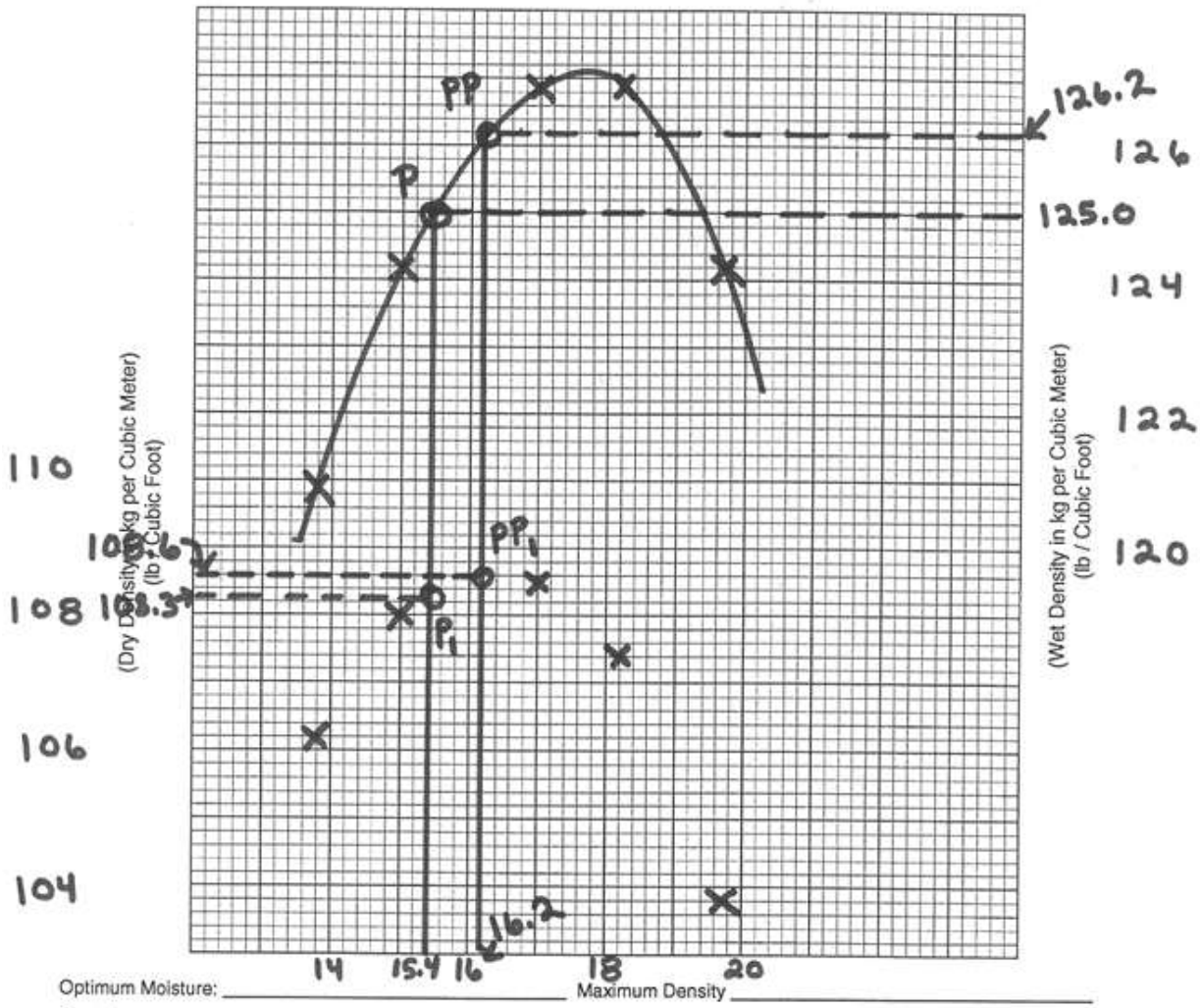

Optimum Moisture: _____ Maximum Density _____

Remarks: _____

cc: Project File

See Grading & Base Manual, Fig. 6-9 5-692.222 (Metric)
See Grading & Base Manual, Fig. 6-9 5-692.222 (English)

5-692.200-Figure 11. Example Proctor Curve (Hand Drawn)

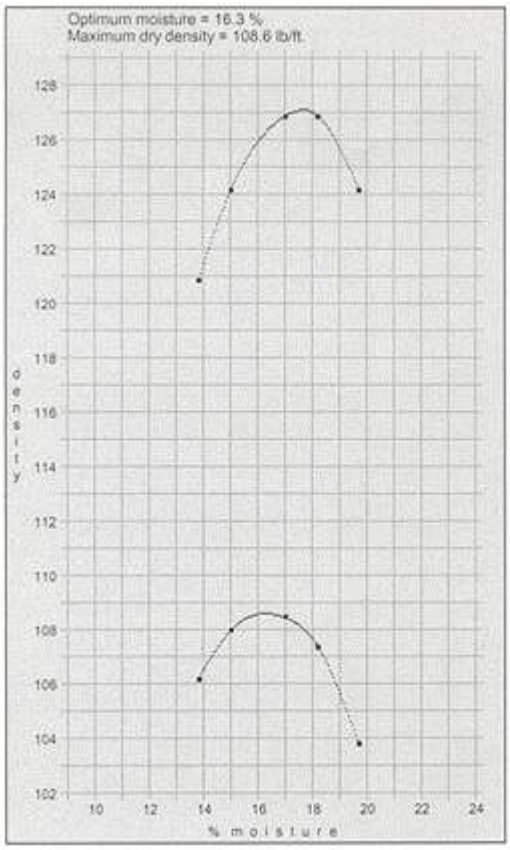

5-692.200-Figure 12. Example Proctor Curve (Computer Generated)

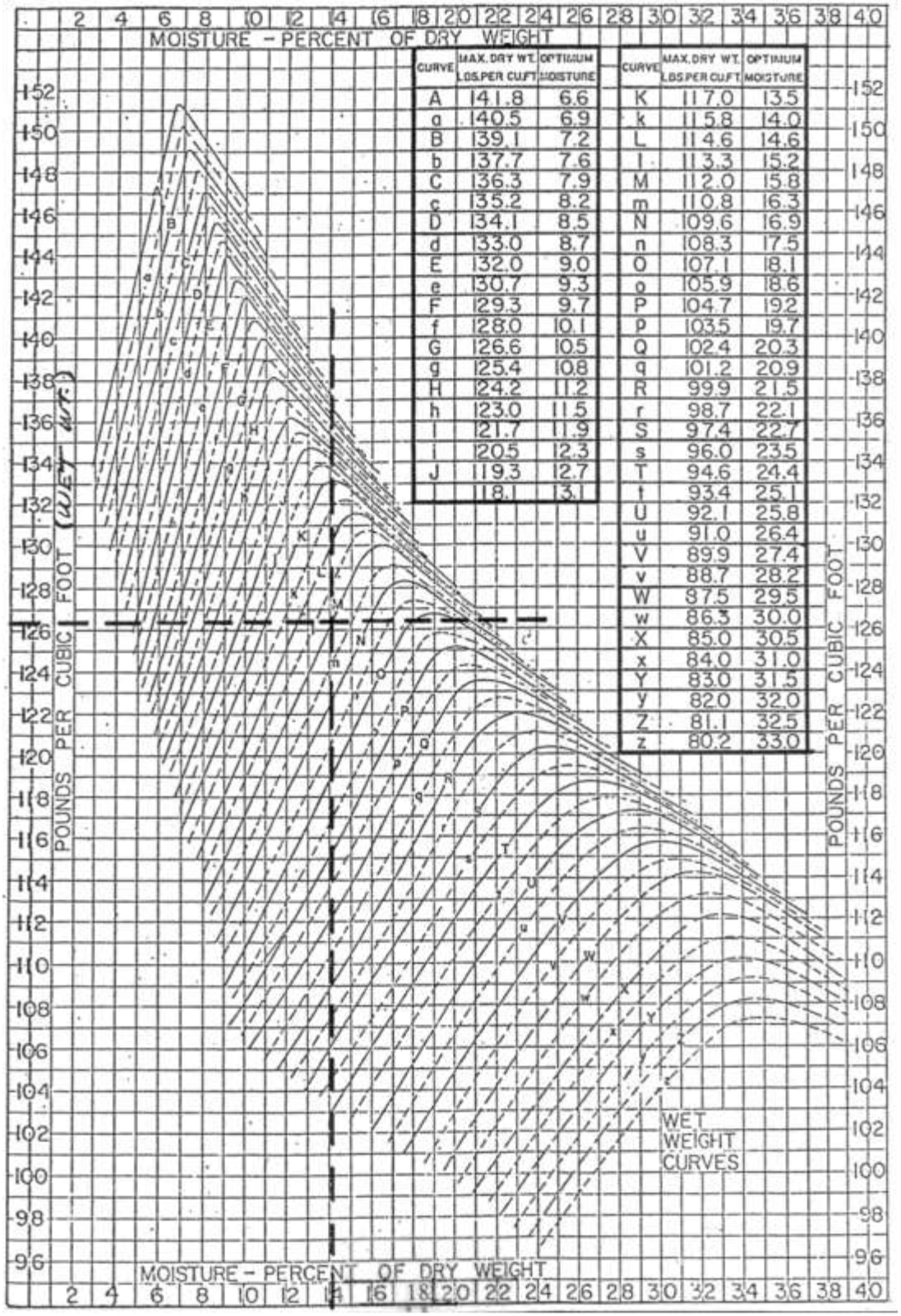

CURVE	MAX. DRY WT. LBS. PER CU. FT.	OPTIMUM MOISTURE
A	141.8	6.6
a	140.5	6.9
B	139.1	7.2
b	137.7	7.6
C	136.3	7.9
c	135.2	8.2
D	134.1	8.5
d	133.0	8.7
E	132.0	9.0
e	130.7	9.3
F	129.3	9.7
f	128.0	10.1
G	126.6	10.5
g	125.4	10.8
H	124.2	11.2
h	123.0	11.5
I	121.7	11.9
i	120.5	12.3
J	119.3	12.7
	118.1	13.1

CURVE	MAX. DRY WT. LBS. PER CU. FT.	OPTIMUM MOISTURE
K	117.0	13.5
k	115.8	14.0
L	114.6	14.6
l	113.3	15.2
M	112.0	15.8
m	110.8	16.3
N	109.6	16.9
n	108.3	17.5
O	107.1	18.1
o	105.9	18.6
P	104.7	19.2
p	103.5	19.7
Q	102.4	20.3
q	101.2	20.9
R	99.9	21.5
r	98.7	22.1
S	97.4	22.7
s	96.0	23.5
T	94.6	24.4
t	93.4	25.1
U	92.1	25.8
u	91.0	26.4
V	89.9	27.4
v	88.7	28.2
W	87.5	29.5
w	86.3	30.0
X	85.0	30.5
x	84.0	31.0
Y	83.0	31.5
y	82.0	32.0
Z	81.1	32.5
z	80.2	33.0

5-692.200-Figure 13. Typical Moisture Density Curves (English)

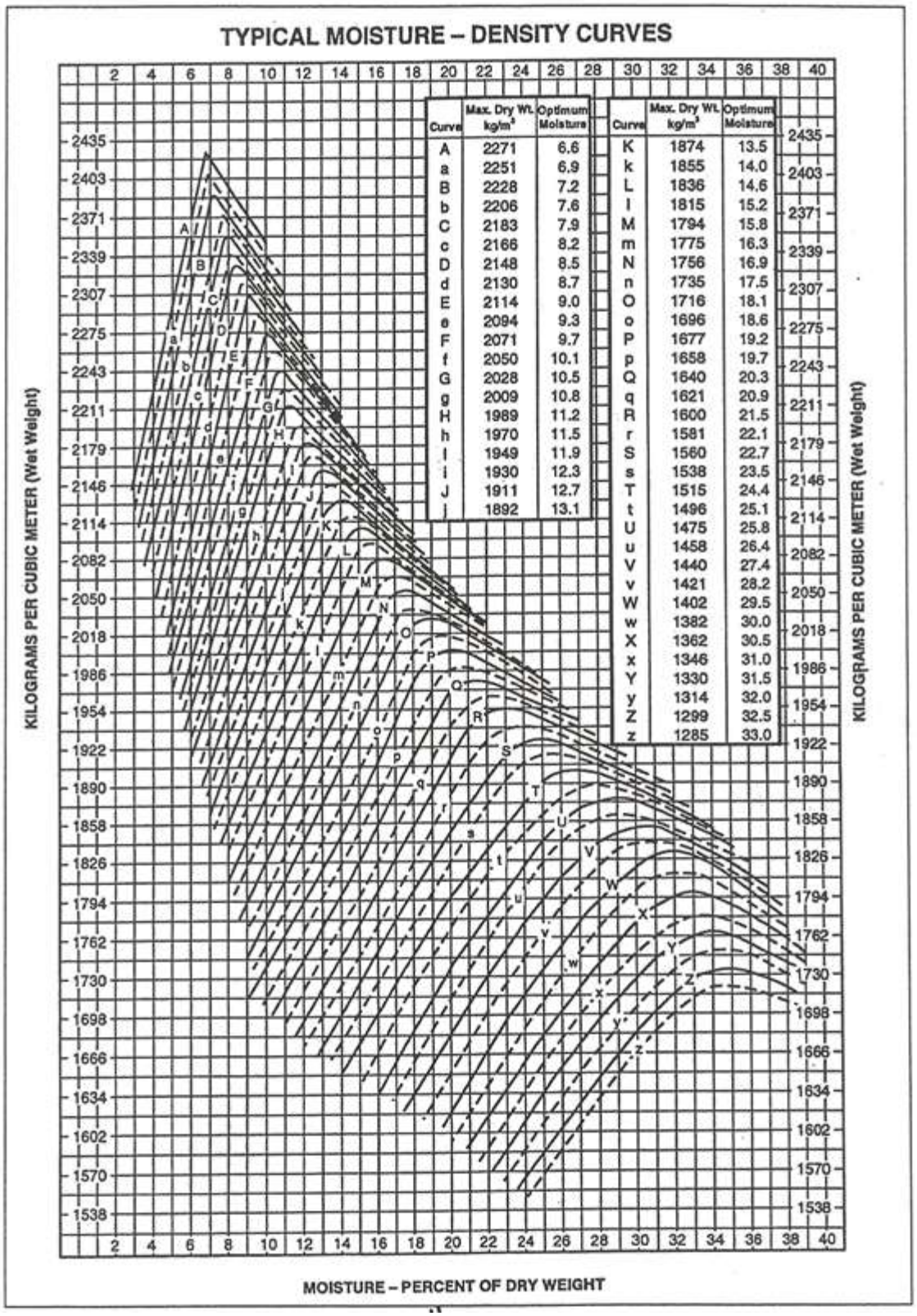

Curve	Max. Dry Wt. kg/m³	Optimum Moisture
A	2271	6.6
a	2251	6.9
B	2228	7.2
b	2206	7.6
C	2183	7.9
c	2166	8.2
D	2148	8.5
d	2130	8.7
E	2114	9.0
e	2094	9.3
F	2071	9.7
f	2050	10.1
G	2028	10.5
g	2009	10.8
H	1989	11.2
h	1970	11.5
I	1949	11.9
i	1930	12.3
J	1911	12.7
j	1892	13.1

Curve	Max. Dry Wt. kg/m³	Optimum Moisture
K	1874	13.5
k	1855	14.0
L	1836	14.6
l	1815	15.2
M	1794	15.8
m	1775	16.3
N	1756	16.9
n	1735	17.5
O	1716	18.1
o	1696	18.6
P	1677	19.2
p	1658	19.7
Q	1640	20.3
q	1621	20.9
R	1600	21.5
r	1581	22.1
S	1560	22.7
s	1538	23.5
T	1515	24.4
t	1496	25.1
U	1475	25.8
u	1458	26.4
V	1440	27.4
v	1421	28.2
W	1402	29.5
w	1382	30.0
X	1362	30.5
x	1346	31.0
Y	1330	31.5
y	1314	32.0
Z	1299	32.5
z	1285	33.0

5-692.200-Figure 14. Typical Moisture Density Curves (Metric)

5-692.231. Calibration of Sand Cone and Ring

A. Calibration Procedure

1. Place the ring on a piece of paper on a level, solid, vibration free table or bench.

2. Put about 2,500 grams of the sand, to be used in the field density test, in the two liter (quart) jar and attach the sand cone device.

3. Weigh the jar, sand and sand cone and record to the nearest gram.

4. Close the valve in the sand cone and invert the jar and cone over the ring.
   Note: Make match marks on the funnel and ring so that each time the sand cone is used it may be placed in exactly the same position on the ring.

5. Carefully open the valve so that the sand flows freely into the ring and funnel.

6. When the sand stops flowing, close the valve sharply and remove the jar and sand cone.

7. Weigh the jar, sand cone and sand remaining in the jar and subtract this weight from the weight of the jar, sand and sand cone before filling the ring and funnel. This difference is the weight of sand required to fill the ring and funnel.

8. Repeat Steps 1 through 7 at least three times and calculate the average weight of the sand in grams required to fill the ring and funnel. Round off the average weight to the nearest gram and record. The weight of the sand in the funnel and ring should not vary more than 5 grams from the other trials.

   Example:

	Trial 1	**Trial 2**	**Trial 3**	**Trial 4**
Wt. of jar, cone & sand before (g)	3390	3388	3384	3393
Wt. of jar, cone & sand after (g)	2758	2761	2753	2763
Wt. of sand in funnel & ring (g)	632	627	631	630
Average wt. of sand (g)	$\frac{632+627+631+630}{4}=630$			

5-692.232. Calibration of Standard Sand

A. Scope

Calibrate the sand; that is determine the unit weight of the sand lbs/ft^3 (kg/m^3) to be used in the field density test. The unit weight of each new sack of sand should be determined. Used sand may be re-sieved and a new unit weight determined. The unit weight of the sand will change if the sand is allowed to become wet or if the gradation of the sand changes. Always protect the sand from contamination. The unit weight of the sand can be determined by using a moisture density mold of known volume or by comparison of the weight of the sand to an equal volume of water.

B. Procedures for Calibrating Standard Sand:
The Density Cone and Ring are first calibrated using the standard MnDOT procedures.

B.1. Field Method No. 1 Procedure

1. Weigh the moisture-density mold to the nearest 0.01 lbs. (gram) and record. Do not include the weight of the collar.

2. Center the mold on a piece of paper placed on a level, solid, vibration free table or bench.

3. Put about 2500 grams of the sand to be calibrated in the two liter jar and attach the sand cone.

4. Close the valve in the sand cone and invert the jar and sand cone over the mold.

5. Carefully open the valve so that the sand flows freely into the mold.

6. When the sand stops flowing, close the valve sharply and remove the jar and cone. Avoid jarring or vibrating the mold.

7. Carefully strike off the excess sand level with the top of the mold with a straight edge.

8. Tap the mold sharply and brush the loose sand off the outside surface of the mold.

9. Weigh the mold and sand to the nearest 0.01 lbs (gram) and record.

10. Repeat Steps 2 thru 9 at least three times. The weight of the mold and sand should not vary more than 0.05 lbs. (25 grams).

11. Subtract the weight of the mold (Step 1) from the weight of mold and sand to determine the weight of the sand in the mold.

12. Calculate and record the unit weight (kg/m^3) [lbs/ft^3] of the sand by dividing the average weight (kg or lb.) of sand in the mold by the volume of the mold (1/1059.43 m^3) [1/30 ft^3].

    English Example:

	Trial 1	**Trial 2**	**Trial 3**	**Trial 4**
Wt. of mold + sand (lbs.)	15.63	15.72	15.65	15.61
Wt. of mold (lbs.)	12.40	12.40	12.40	12.40
Wt. of sand in mold (lbs.)	3.23	3.32	3.25	3.21
Average wt. of sand (lbs.)	$\frac{3.23+3.32+3.25+3.21}{4} = 3.23\,lbs.$			

Metric Example:

	Trial 1	**Trial 2**	**Trial 3**	**Trial 4**
Wt. of mold + sand (kg)	7.093	7.123	7.085	7.104
Wt. of mold (kg)	5.620	5.620	5.620	5.620
Wt. of sand in mold (kg)	1.473	1.503	1.465	1.484
Average wt. of sand (kg)	$\frac{1.473+1.503+1.465+1.484}{4}=1.474\ kg$			

Note: Trial 3 was not used because it varied more than 5 grams from at least one other.

Unit weight of sand

$$\frac{3.23}{\frac{1}{30}}=3.23\times 30=96.9\ lbs./cu.\ ft.$$

$$\frac{1.474}{\frac{1}{1059.43}}=1.474\times 1059.43=1562\ kg\ per\ m^3$$

D.2. Field Method No. 2 Procedure

1. The density bottle is filled with a known weight of Standard Sand, usually about 2500 grams.

2. On a clean, level surface place a Proctor Mold (1/30 ft^3) [1/1060 m^3] with its' collar removed.

3. Place the Density Ring on the top edge of the Proctor Mold, being careful to line up the inside edge of the ring with the inside of the mold.

4. Place the Density Cone, with bottle and sand, on the Density Ring. Use the same method as calibrating Cone and Ring.

5. Carefully open the valve on the cone. When the sand stops flowing, close the valve.

6. Weigh the remaining sand in the bottle and record to the nearest gram.

7. Repeat Steps 1 through 6 at least three times. The weight of the sand should not vary more than 5 grams.

Example:

	Trial 1	**Trial 2**	**Trial 3**	**Trial 4**
Final Wt. of sand in bottle (g)	548	550	561	552
Average wt. of sand (kg)	$\frac{548+550+552}{3}=550$			

Note: Trial 3 was not used because it varied more than 5 grams from at least one other.

8. Subtract the average weight of sand remaining in the bottle and the weight of sand in cone and ring from the original weight of sand to determine the weight of sand in the mold.

Note: In order to do this procedure, you have to calibrate the Sand Cone and Ring first.

9. Calculate and record the lbs. (kg) of sand in mold by dividing the average weight (g) of sand in mold by 453.6 gm/lb. (1000 g/kg).

10. Calculate and record the unit weight (lbs/ft^3) [kg/m^3] of sand by multiplying the weight (lbs.) [kg] of sand in mold by 30 (1059.43).

English Example:
Original wt. of sand = 2500.0 grams = A
Average final wt. of sand = 550.0 grams = B
Wt. of sand in cone & ring = 450.0 grams = C
A - B - C = D
Grams of sand in mold = 1500.0 grams = D
D / 453.6 (gms./lb.) = E
1500/453.6 = 3.307 = E
lbs. of sand in mold = 3.307 = E
E x 30 = 99.2 lbs/ft^3 = F

Metric Example:
Original wt. of sand = 2500.0 grams = A
Average final wt. of sand = 550.0 grams = B
Wt. of sand in cone & ring = 450.0 grams = C
A - B - C = D
Grams of sand in mold = 1500.0 grams = D
D / 1000 = E
kg of sand in mold = 1.500 kg = E
E x 1059.43 = F
kg/m^3 of sand = 1589 kg/m^3 = F

5-692.245. Moisture Test

A. Scope
The moisture test is a method of determining the moisture content of soils and aggregates by means of either drying the sample or by means of a calcium carbide gas pressure (CCGP) moisture meter. Moisture tests are taken to determine if the moisture content, expressed as a

percentage of the dry weight, is in compliance with the placement and compaction requirements of the specifications. The moisture content should be determined at the time compaction of the material starts. Moisture requirements should be met and maintained for each layer of embankment before the next layer is placed. If the moisture content of embankment, particularly in plastic soils is not properly tested and controlled, the subgrade will likely become unstable under the operation of construction equipment during base and pavement construction. The method used to determine the moisture content depends on the type of soil aggregate as follows:

1. The burner method may be used to determine the moisture content of any grading, subgrade, base or shoulder material. Minor variations of the procedure are necessary for reliable results when testing materials that have been treated, such as with bituminous, see section, "5-692.216. Washing & Drying Gradation Samples Containing Salvaged Bituminous".

2. The calcium carbide gas pressure (CCGP) method may be used to determine the moisture content of untreated grading soils, subbase and base aggregate except those granular materials having particles large enough to affect the accuracy of the test. Either a 26 gram soil sample size "Speedy" or 200 gram soil sample size "Super Speedy" moisture meter is used.

   The 26 gram "Speedy" meter is to be used for non-granular soils, in general no appreciable amount retained on the No. 4 (4.75 mm) sieve. The 200 gram "Super Speedy" meter is to be used for granular soils and aggregate base with particle size not to exceed 2" (50 mm). The CCGP method is as reliable and accurate as the burner method in these cases.

   Note: Use Form G&B-104 (MnDOT TP 21850) Relative Moisture Test, to record field moisture determinations, see Figure 21.

B.1. Equipment for Burner Method

1. A electronic scale of at least 2,500 gram capacity sensitive to 0.1 gram and with minor graduations on the indicator for 0.1 gram.

2. Stove, oven, or other suitable equipment for drying moisture content samples.

3. Frying pan or any suitable container for drying and weighing samples.

B.2.1. Equipment for CCGP Method: 26 gram "Speedy" Moisture Meter

The "Speedy" moisture meter is furnished as a kit containing the CCGP meter, tared scale, two 1-1/4" (32 mm) steel balls, cleaning brush and cloth, and scoop for measuring calcium carbide reagent.

Calcium carbide reagent is available in one pound cans. The calcium carbide to be used should be "fresh" and, therefore should not be more than 2 – 3 years old even though the container has never been opened. After a container has been opened and then resealed properly, its full strength will probably dissipate within two months to a point at which it will not produce accurate test results and should be discarded.

Caution: Do not attempt to use the "Speedy" unless the kit is complete. Calcium carbide and water produces a dangerous, flammable gas. Keep the reagent can closed tightly, avoid breathing the fumes and use only in a well-ventilated area. Point the opening of the tester away while removing the cap. Tape the metal handle of the cleaning brush; otherwise, when the metal handle comes in contact with the chamber a spark could ignite gas trapped in the chamber. Keep the kit clean; do not allow the instrument to be mishandled.

B.2.2. Transporting Calcium Carbide (Speedy Moisture Tester Reagent)
This material may be transported under an exemption to the strict DOT shipping requirements for hazardous materials, if all the following procedures are strictly followed:

A. You are carrying no more than one pound or a ½ kilogram in the original manufacturer's container.

B. This container is stored in a secured durable box.

C. The durable box is clearly labeled on all sides with (Figure 15):
   1. Calcium Carbide, 4, 3

   2. UN 1402, P G II

   3. Limited Quantity

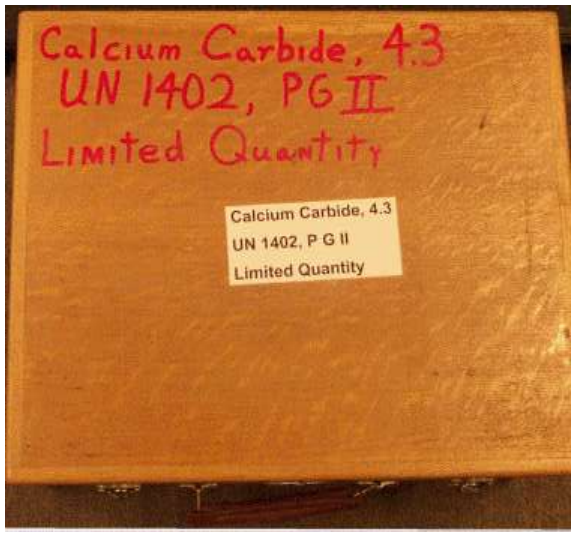

5-692.200- Figure 15. Example Labeling Requirements for Calcium Chloride

D. The shipping manifest is within reach of the driver at all times.

E. The shipping manifest must include the following information (Figure 16):
   1. Calcium Carbide, 4, 3

   2. UN1402, Packing Group PG II

   3. Limited Quantity

4. The weight or volume of material being carried

5. The Emergency Response telephone number

Note: Citations and penalties for failure to comply with DOT shipping requirements for hazardous materials are the sole responsibility of the motor vehicle drivers.

MINNESOTA DEPARTMENT OF TRANSPORTATION

HAZARDOUS MATERIAL SHIPPING DOCUMENT

Date: June 15, 2002

Shipped From: Office of Materials and Road Research **Shipped To:** Trunk Highway Construction Projects

1400 Gervais Ave., Maplewood, MN 55109 Minnesota Trunk Highways

Equipment: Speedy Moisture Test Reagent **Unit:** One (1) pound Can

Description & Classification	Hazard Class	Identification Number (If applicable)	Packing Group (If applicable)	Quantity	Size	Total
Calcium Carbide, Class 4.3 UN 1402 (LIMITED QUANTITY)	4.3	UN 1402	Packing Group II	Limited Quantity	1 lb.	1 lb.

5-692.200-Figure 16. Hazardous Material Shipping Document

B.3.1. Equipment for CCGP Method: 200 gram "Super Speedy" Moisture Meter

The "Super Speedy" 200 kit consists of the moisture meter, counterpoised balance, measuring scoop, brushes, two steel balls, a 200 gram weight and 100 gram half sample weight, heat shield, two gauges and gauge removing tool. One gauge for determining the moisture content by wet weight is calibrated from zero to eleven percent. The other gauge is for determining the moisture content by dry weight and is calibrated from zero to 12 percent. To change gauges, use the special tool supplied. The tool is designed to grip the three screws on the outer casing of the gauge. To remove the gauge turn in a counter-clockwise direction. To replace the gauge, turn in a clockwise direction.

Caution: See "Caution" in, "B.2.1. Equipment for CCGP Method: 26 gram "Speedy" Moisture Meter".

B.3.2. Transporting Calcium Carbide (Speedy Moisture Tester Reagent)
See "B.2.2. Transporting Calcium Carbide (Speedy Moisture Tester Reagent)" in section, "5-692.245. Moisture Test".

C.1. Procedure for Burner Method

1. Select a representative soil sample. The larger the sample used, the more accurate the test results will be. The minimum size sample should range from 100 grams for fine grained soils to 1000 grams for 2" (50 mm) maximum particle size. At least 500 grams of base aggregate should be used.

2. Weigh the pan or container to be used to the nearest gram and record the weight.

3. Weigh the wet sample and container to the nearest gram and record the weight.

4. Dry the sample to a constant weight by weighing the sample after it appears dry, reheat it for a short time and weigh again. Continue drying and weighing the sample until the weight remains constant. Constant weight is defined as no change greater than 0.5 grams in 15 minutes.
   Note: To prevent burning or warping of the scale, the sample should be allowed to cool or a heat pad should be used to protect the scale.

5. Weigh the sample and container to the nearest gram and record the weight.

6. Determine the weight of moisture in the sample by subtracting the weight of the dry sample and pan from the weight of the wet sample and pan.

7. Determine the weight of the dry material by subtracting the weight of the pan from the weight of the dry material and pan.

8. Calculate the percent moisture of the dry weight by dividing the weight of the moisture by the weight of the dry material and then multiply by 100.

   Example:
   Wet wt. of sample and pan = 327 g
   Dry wt. of sample and pan = 305 g
   Weight of pan = 79 g
   Wt. of moisture = 327 – 305 = 22 g
   Wt. of dry material = 305 – 79 = 226 g
   % moisture, dry wt. = $\frac{22}{226} \times 100\% = 9.7\%$

   Note: The percent moisture of the wet weight is calculated by dividing the weight of the moisture by the weight of the wet material.

C.2. Procedure for CCGP Method: 26 gram "Speedy" Moisture Meter

1. Set the "Speedy" carrying case on level ground or a solid, level bench. The tared scale must be level to be reliable.

2. Select a representative soil sample and weigh out an exact amount on the tared scale. The tared scale weighs either a 26 or 13 gram sample. The pressure gage indicates up to 20 percent moisture in a 26 gram sample or 40 percent moisture in a 13 gram sample. If the moisture is expected to be five to 20 percent, use a 26 gram sample; if 20 to 40 percent, a 13 gram sample; and, if over 40 percent, use the burner method. If the soil contains less than five percent moisture, use two or more 26 gram samples.

3. Calculate and record the Sample Size Factor using the following formula:

   $$\text{Sample Size Factor} = \frac{200}{Weight\ of\ Sample\ Used}$$

4. Place the weighed soil sample in the cap of the meter. Be certain the cap is clean.

5. Place three full scoops of reagent and the two steel balls in the body of the meter.

6. Hold the body of the meter in an approximately horizontal position, insert the cap into the body, and seal the unit by positioning and tightening the clamp. The calcium carbide should not come in contact with the soil until a complete seal is made. (Figure 17, a).

7. Tilt the meter so that the sample falls into the body and begins mixing with the reagent.

8. Return the Speedy to the horizontal position. Shake the tester to pulverize any soil lumps and to cause mixing so that the reaction between the calcium carbide and all free moisture is complete. The meter should be shaken with a rotating motion so that the steel balls will not damage the gauge and soil particles will not become imbedded in the orifice leading to the pressure diaphragm. Do not allow the balls to hit the gauge end of the meter. Attempt to roll the balls rather than rattle them. Up to four minutes of shaking may be required on heavy clay type soils. Allow time for the dissipation of heat generated by the chemical reaction. (Figure 17, b)

9. Hold the meter horizontal at eye level with the dial facing you (Figure 17, c). When the needle comes to rest, read the dial to the nearest 0.1 percent and record the dial reading.

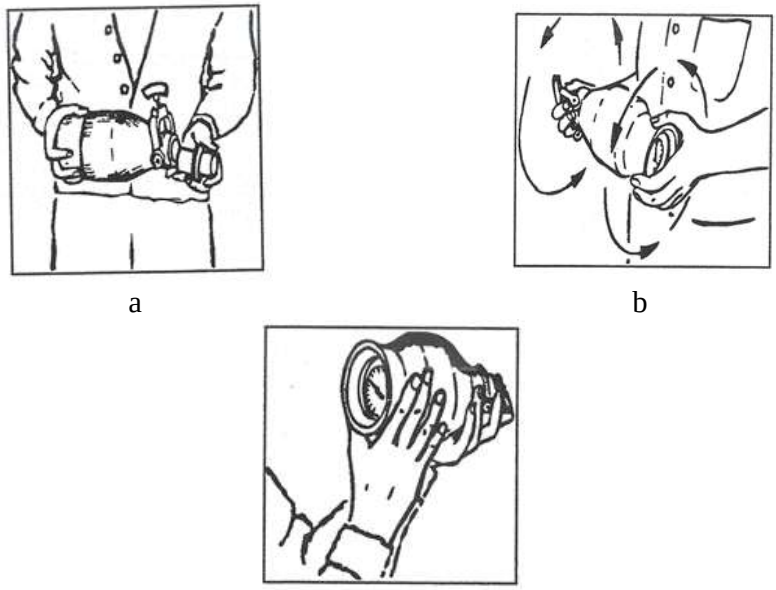

a b

c

5-692.200- Figure 17. Sealing, Shaking, and Reading the Speedy Test Apparatus

10. Calculate and record the percent moisture of the wet weight by multiplying the dial reading by the sample size factor.

11. Determine and record the percent moisture by dry weight by using Table 13 or the following formula:

$$\text{\% moisture, dry wt.} = \frac{100 \times \%\ moisture,\ wet\ weight}{100 - \%moisture,\ wet\ weight}$$

Example: % moisture, wet wt. = 12.8%

$$\%moisture,\ dry\ wt. = \frac{100 \times 12.8}{100 - 12.8} = \frac{1280}{87.2} = 14.7\%$$

12. Point the opening away from you, slowly release the pressure and remove the cap.

13. Dump the material from the meter and examine. The soil must be completely pulverized. Lumps indicate an inaccurate test that must be re-run, increasing the shaking time.

14. Brush out the body of the meter. Wipe out the cap and clean off the two steel balls with the special cleaning rag.

Note: Keep the Speedy kit clean at all times. Never leave the kit out in the rain or allow anyone to mishandle any part of it.

C.3 Procedure for CCGP Method: 200 gram "Super Speedy" Moisture Meter

1. Set the "Super Speedy" carrying case on level ground or a solid, level bench. The tared scale must be level to be reliable.

2. Select a representative sample and weigh a 200 gram sample on the scale provided. If the moisture content is likely to exceed the maximum gauge reading, use a half sample (100 g) and the wet weight gauge. The half sample method cannot be used with the dry weight gauge.

3. Calculate and record the sample size factor using the following formula:

$$\text{Sample size factor} = \frac{200}{Weight\ of\ \ Sample\ Used}$$

4. Place the weighed sample in the cap of the meter (Figure 18, a).

5. Place six full measures of regent in the body of the "Super Speedy" (Figure 18, b). Place the two steel pulverizing balls in the body.

6. Hold the "Super Speedy" in an approximately horizontal position, insert the cap into the body and seal the unit by tightening the clamp. Care must be taken to prevent the reagent from coming in contact with the sample before the seal is complete (Figure 18, c).

7. With the dial downward, shake the unit round and round for approximately five seconds. Hold or stand the "Super Speedy" in a vertical position for one minute (Figure 18, d).

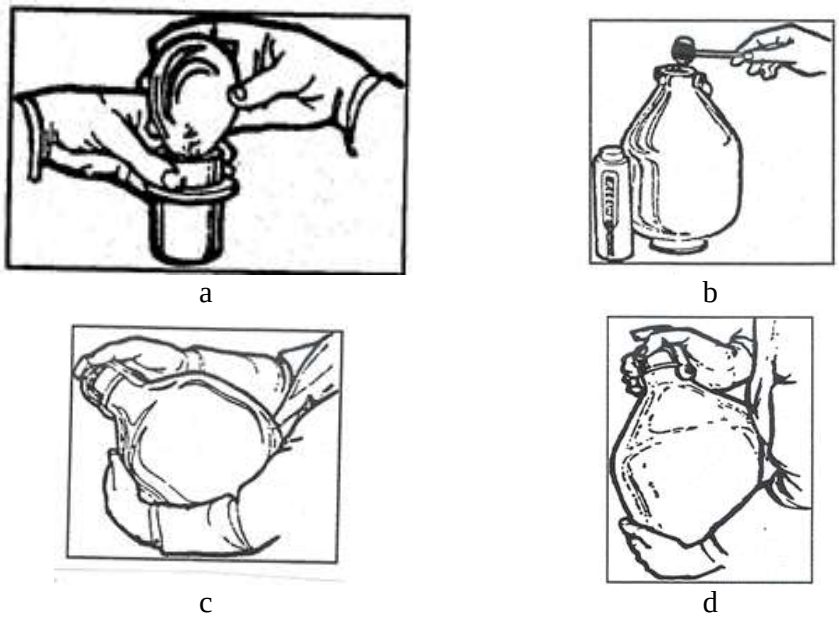

5-692.200- Figure 18. Placing Sample and Reagent into Speedy Apparatus

8. Repeat Step 7, shake once more and turn the unit into a horizontal position at eye level with the dial facing you. When the needle comes to rest, read the dial to the nearest 0.1 percent and record the dial reading (Figure 19, a).

a b

5-692.200- Figure 19. Reading the Speedy Gauge and Releasing the Pressure

9. Calculate and record the percent moisture by multiplying the dial reading by the sample size factor.

If the dry weight gauge was used, record the percent moisture of the dry weight. If the wet weight gauge was used, record the percent moisture of wet weight and determine the percent moisture of dry weight by using Table 13 or the following formula:

$$\text{\% moisture, dry wt.} = \frac{100 \times \%moisture,\ wet\ wt.}{100 - \%moisture,\ wet\ wt.}$$

10. Point the opening away from you, slowly release the pressure and remove the cap (Figure 19, b).

11. Dump the material from the meter and examine. The soil must be completely pulverized. Lumps indicate an inaccurate test that must be rerun, increasing the shaking time.

12. Brush out the body of the meter. Wipe out the cap and clean off the two steel balls with the special cleaning rag.

Note: Keep the Speedy kit clean at all times. Never leave the kit out in the rain or allow anyone to mishandle any part of it.

D. Alternate Device and Method

A nuclear gauge may be used to determine moisture content per ASTM D6938, Procedure A.

5-692.200-Table 13. Conversion Table – Percent Moisture

WET	DRY	WET	DRY	WET	DRY	WET	DRY
0.0	0.0	7.0	7.5	14.0	16.3	21.0	26.6
0.1	0.1	7.1	7.6	14.1	16.4	21.1	26.7
0.2	0.2	7.2	7.8	14.2	16.6	21.2	26.9
0.3	0.3	7.3	7.9	14.3	16.7	21.3	27.1
0.4	0.4	7.4	8.0	14.4	16.8	21.4	27.2
0.5	0.5	7.5	8.1	14.5	17.0	21.5	27.4
0.6	0.6	7.6	8.2	14.6	17.1	21.6	27.6
0.7	0.7	7.7	8.3	14.7	17.2	21.7	27.7
0.8	0.8	7.8	8.5	14.8	17.4	21.8	27.9
0.9	0.9	7.9	8.6	14.9	17.5	21.9	28.0
1.0	1.0	8.0	8.7	15.0	17.6	22.0	28.2
1.1	1.1	8.1	8.8	15.1	17.8	22.1	28.4
1.2	1.2	8.2	8.9	15.2	17.9	22.2	28.5
1.3	1.3	8.3	9.1	15.3	18.1	22.3	28.7
1.4	1.4	8.4	9.2	15.4	18.2	22.4	28.9
1.5	1.5	8.5	9.3	15.5	18.3	22.5	29.0
1.6	1.6	8.6	9.4	15.6	18.5	22.6	29.2
1.7	1.7	8.7	9.5	15.7	18.6	22.7	29.4
1.8	1.8	8.8	9.6	15.8	18.8	22.8	29.5
1.9	1.9	8.9	9.8	15.9	18.9	22.9	29.7
2.0	2.0	9.0	9.9	16.0	19.0	23.0	29.9
2.1	2.1	9.1	10.0	16.1	19.2	23.1	30.0
2.2	2.2	9.2	10.1	16.2	19.3	23.2	30.2
2.3	2.4	9.3	10.3	16.3	19.4	23.3	30.4
2.4	2.5	9.4	10.4	16.4	19.6	23.4	30.5
2.5	2.6	9.5	10.5	16.5	19.8	23.5	30.7
2.6	2.7	9.6	10.6	16.6	19.9	23.6	30.9
2.7	2.8	9.7	10.7	16.7	20.0	23.7	31.1
2.8	2.9	9.8	10.9	16.8	20.2	23.8	31.2
2.9	3.0	9.9	11.0	16.9	20.3	23.9	31.4
3.0	3.1	10.0	11.1	17.0	20.5	24.0	31.6
3.1	3.2	10.1	11.2	17.1	20.6	24.1	31.8
3.2	3.3	10.2	11.4	17.2	20.8	24.2	31.9
3.3	3.4	10.3	11.5	17.3	20.9	24.3	32.1
3.4	3.5	10.4	11.6	17.4	21.1	24.4	32.3
3.5	3.6	10.5	11.7	17.5	21.2	24.5	32.5
3.6	3.7	10.6	11.9	17.6	21.4	24.6	32.6
3.7	3.8	10.7	12.0	17.7	21.5	24.7	32.8
3.8	4.0	10.8	12.1	17.8	21.7	24.8	33.0
3.9	4.1	10.9	12.2	17.9	21.8	24.9	33.2
4.0	4.2	11.0	12.4	18.0	22.0	25.0	33.3
4.1	4.3	11.1	12.5	18.1	22.1	25.1	33.5
4.2	4.4	11.2	12.6	18.2	22.2	25.2	33.7
4.3	4.5	11.3	12.7	18.3	22.4	25.3	33.9
4.4	4.6	11.4	12.9	18.4	22.5	25.4	34.0
4.5	4.7	11.5	13.0	18.5	22.7	25.5	34.2
4.6	4.8	11.6	13.1	18.6	22.9	25.6	34.4
4.7	4.9	11.7	13.3	18.7	23.0	25.7	34.6
4.8	5.0	11.8	13.4	18.8	23.2	25.8	34.8
4.9	5.2	11.9	13.2	18.9	23.3	25.9	35.0
5.0	5.3	12.0	13.6	19.0	23.5	26.0	35.1
5.1	5.4	12.1	13.8	19.1	23.6	26.1	35.3
5.2	5.5	12.2	13.9	19.2	23.8	26.2	35.5
5.3	5.6	12.3	14.0	19.3	23.9	26.3	35.7
5.4	5.7	12.4	14.2	19.4	24.1	26.4	35.9
5.5	5.8	12.5	14.3	19.5	24.2	26.5	36.1
5.6	5.9	12.6	14.4	19.6	24.4	26.6	36.2
5.7	6.0	12.7	14.5	19.7	24.5	26.7	36.4
5.8	6.2	12.8	14.7	19.8	24.7	26.8	36.6
5.9	6.3	12.9	14.8	19.9	24.8	26.9	36.8
6.0	6.4	13.0	14.9	20.0	25.0	27.0	37.0
6.1	6.5	13.1	15.1	20.1	25.2	27.1	37.2
6.2	6.6	13.2	15.2	20.2	25.3	27.2	37.4
6.3	6.7	13.3	15.3	20.3	25.5	27.3	37.6
6.4	6.8	13.4	15.5	20.4	25.6	27.4	37.7
6.5	7.0	13.5	15.6	20.5	25.8	27.5	37.9
6.6	7.1	13.6	15.7	20.6	25.9	27.6	38.1
6.7	7.2	13.7	15.9	20.7	26.1	27.7	38.3
6.8	7.3	13.8	16.0	20.8	26.3	27.8	38.5
6.9	7.4	13.9	16.1	20.9	26.4	27.9	38.8

5-692.246. Field Density Test: Sand Cone Method

5-692.247. Sampling and Inspection

A. Density tests are taken to determine whether embankment or base materials have been compacted to the specified density. Tests should be made immediately after compaction to permit corrective work, before drying and hardening occurs, in sections where the specified density has not been attained. It is also easier, faster and more accurate to perform tests on a moist, newly compacted surface than on one that has become hard, dry and rough.

B. Before selecting locations for the density test, examine the section to be tested for uniformity. Where it appears that there is a lack of stability or compaction, the density should be determined. In sections where there is apparent uniformity of materials and compaction, such as for granular soils or aggregate base, select locations for density determinations at random: but avoid traffic wheel tracks, areas where segregation of materials occur, and locations having pocketed soil conditions.

C. When embankment or base materials being tested contain stones larger than 1" (25 mm), care must be exercised to avoid areas of marked deviation from average conditions. If large stones are encountered in digging the hole, select a new location.

D. At all test locations, the material should be closely examined to determine whether a moisture density curve has been developed from the same class of material. If none of the available moisture-density curves are representative of the material being tested, additional material should be obtained from determination of the moisture density relations, see section, "5-692.222. Moisture-Density Test Method (Proctor)".

5-692.248. Field Density Test Procedures

A. Sandcone Scope

This field density test is a method of determining the in place density of grading soils or aggregate base, subbase and aggregate surfacing and is a modification of AASHTO T 191. The test consists of digging a hole about 100 mm (4") in diameter and as deep as necessary to test the layer in place. All of the material is carefully removed and weighed. The volume of the hole is determined by filling the hole with sand of known unit weight. The moisture content is determined and the dry density of the material is calculated.

B. Sand Cone Equipment

1. Two quart (liter) mason jar with sand cone and valve attachment.

2. Ring with a 4" (100 mm) diameter center hole, two nails and hammer.

3. Sample containers, such as tin cans with lids, for retaining the density sample.

4. Small pick, chisels and spoons for digging the test hole. Spatula and small brush.

5. An electronic scale of at least 2500 grams capacity sensitive to 0.1 gram and with minor gradations on the indicator for 0.1 gram.

6. Speedy moisture meter, stove or oven and suitable containers for drying and weighing moisture content samples.

7. A moisture density mold with a volume of approximately 1/30 ft^3 (1/1060 m3), see, "1." in "B. Equipment" of section, "5-692.222. Moisture-Density Test Method (Proctor)".

8. A electronic platform scale with a minimum 30 lbs. (14 kg) capacity sensitive to one gram and with minor gradations on the indicator of one gram (0.01 lb.).

9. Supply of standard sand. The sand used to determine the volume of the hole is a silica sand graded to pass a No. 20 (850 µm) sieve and be retained on a No. 30 (600 µm) sieve. The sand is usually supplied in 50 lb. (24 kg) sacks. If standard sand is not available, local sand may be used if it is free flowing, washed, dried and sieved through a No. 20 (850 µm) and a No. 30 (600 µm) sieve. Use the sand retained on the No. 30 (600 µm) sieve.
   Note: Use Form MnDOT G&B-304, "Relative Density Test" to record field density determinations (Figure 20).

C. Sand Cone Procedure: Determine the density of in-place soil

1. Select the location of the test (section, "5-692.247. Sampling and Inspection") and remove any loose material.

2. Smooth and level the surface of the area until the ring can be evenly seated. Secure with nails driven through the pre drilled holes on the opposite sides of the ring into the soil.

3. Dig the test hole the size of the inside diameter of the ring being very careful to avoid disturbing the soil that will bound the hole. Granular soils require extreme care. Cut the sides of the hole vertical and smooth out rough spots that may develop when small stones are loosened. If stones larger than 2" (50 mm) are loosened, remove them but do not include them with the finer material in the sample container. Dig the hole as deep as necessary to test the layer compacted. Place all loosened soil in a clean container being careful to avoid losing any material.
   Note: Density tests on grading construction usually represents layers 8" (200 mm) or 12" (300 mm) in thickness (loose measurement). The test hole for grading construction should be at least 4-1/2" (115 mm) deep and yield from 1200 grams of dry material for fine grained soils to 1800 grams for gravelly soils. The standard sand cone density testing device with an approximate cone of 4-1/2" (115 mm) diameter is recommended. 6 ½ (165mm) may be used also.

   Note: Density tests on base aggregate construction usually represent 3" (75 mm) or 6" (150 mm) compacted lifts. When the compacted lift is between 3" (75 mm) and 6" (150 mm), the test hole should be at least 60 mm (2-1/2") in depth and yield about 2000 grams of dry material. The minimum lift that can be accurately tested is 2" (50 mm) in depth. The 2" (50 mm) test hole should yield a minimum of 1650 grams. The larger sand cone testing device with an approximate cone of 6-1/2" (165 mm) diameter is recommended.

4. Weigh and record a quantity of sand plus container. Place the sand in the two quart (liter) jar and attach the sand cone.

Note: The amount of sand needed depends on the size of the test hole. When the standard 4-1/2" (115 mm) diameter sand cone test device is used, 2,200 grams is usually enough for a 3" (75 mm) to 4-1/2" (115 mm) deep. When the larger 6-1/2" (165 mm) diameter sand cone test device is used, usually 2,500 grams is enough for aggregate test.

5. Invert the jar and sand cone and place it on the ring. Use the match marks on the ring and funnel to make sure they are in the same position as when the device was calibrated.
   Note: Do not allow construction equipment to operate within 30' (10 m) of test site while testing is in progress.

6. Open the valve and allow the sand to fill the hole and the sand cone.
   Note: If stones larger than 2" (50 mm) were removed from the hole in Step 3, open the valve and let a small amount of sand flow into the hole; close the valve, remove the sand cone and place the rocks on the sand bedding in the hole; replace the jar and sand cone, reopen the valve and complete Step 6.

7. When the sand stops flowing, close the valve and remove the jar and sand cone.

8. Weigh and record the sand remaining plus container.

9. Weigh the wet material removed from the hole.

10. Determine the moisture content of a representative portion of the material from the hole by the burner method or speedy moisture meter. The procedure for determining the moisture content is contained in section, "5-692.245. Moisture Test". The moisture content expressed as a percent of the wet weight must be used if the procedure outlined on Form G&B- 304, "Relative Density". Record the percent moisture.

D. Sand Cone Calculations

1. Calculate and record the weight of the sand used in the test by subtracting the weight of the container and sand remaining after performing the test (Steps 5 thru 8, above) from the weight of the container and sand before performing the test (Step 4).

2. Calculate and record the weight of the sand required to fill the hole by subtracting the weight of the sand required to fill the ring and the funnel from the weight of the sand used in the test (Step 1, above).

3. Determine the dry weight of the material by calculating the weight of the moisture and subtracting it from the wet weight of the material from the hole.

   Example:

   Wet wt. of material = 1368 g
   Moisture content = 7.48%

   $$Wt.\ of\ moisture = wet\ wt. \times \frac{\%moisture}{100} = 1368 \times 0.0748 = 102g$$

   Dry wt. = Wet wt. – wt. of moisture = 1368 – 102 = 1268 g

Note: An alternate method of obtaining the dry weight is to dry all the material removed from the test hole (minus 2" [50 mm] size) and weigh it to the nearest gram. Record this weight as the dry weight of the material from the hole.

4. Calculate the dry density of the in place material using the formula:

$$Dry\ Density, kg/m^3 = \frac{dry\ wt.\ of\ material\ (g)}{wt.\ of\ sand\ inside\ hole\ (g)} \times units\ of\ sand\ inside\ hole\ \left(kg/m^3\right)$$

Example:

Dry wt. of material removed from hole = 1266 g
Wt. of sand required to fill hole = 958 g
Unit wt. of standard sand (from calibration) = 97.1 lbs/ft^3 (English), or 1554 kg/m^3 (Metric)

English Dry Density = $\frac{1266}{958} \times 97.1 = 128.3\ lbs/\ ft^3$

Metric Dry Density = $\frac{1266}{958} \times 1554 = 2054\ kg/m^3$

E. Alternate Device and Method

A nuclear gauge may be used to determine density per ASTM D6938, Procedure A.

5-692.251. Relative Density

A. General

Relative density is the ratio, in percent, of the field density of in place embankment, base or subbase aggregate to the maximum density of the material. The field density of the in place material is determined by, "5-692.246. Field Density Test: Sand Cone Method". The maximum density is determined by, "5-692.222. Moisture-Density Test Method (Proctor)".

The relative density of the in-place compacted embankment, base or subbase is compared to the percent density specified to determine if the material has been compacted as required.

B. Calculations

Relative density is calculated by using the following formula:

Relative Density (%) = Field Density (lbs/ft^3 or kg/m^3)/Maximum Density (lbs/ft^3 or kg/m^3)

Example:

Field Density, Dry Density = 118.6 lbs./ft^3 (2091 kg/m^3)
Maximum Density = 116.3 lbs./ft^3 (2050 kg/m^3)

Relative Density = $\frac{118.6\ (2091)}{116.3\ (2050)} \times 100\% = 102\%$

Figure 20, Form G&B-304, combines the field density test and relative density determination.

TP-02140-03 (4/21/02)

Minnesota Department of Transportation

Office of Materials and Road Research

Page No. 2

Relative Density Test Grading & Base Construction

S. P. No: 1908-23

Test Identification Data					
Date	5-18-01	5-18-01	5-19-01	7-9-01	7-9-01
Test No.	15	16	16A	11	12
Soil Class or 3138 Class	CL	CL	CL	Cl.5	Cl.5
Station	302+00	524+00	524+00	727+00	758+50
Roadway: Position to Center Line	NBL 8' Rt	SBL ℄	SBL ℄	EB 6' Rt	WB ℄
Depth Below Grade	2'	6'	6'	3"	3"
Volume Determination (sand cone)					
A. Wt. Sand & Container Before	3490	3489	3503	3084	3081
B. Wt. Sand & Container After	1516	1448	1606	1496	1516
C. Wt. Sand in Funnel & Hole A-B	1974	2041	1897	1588	1565
D. Wt. Sand in Funnel (from Calib)	651	651	651	630	630
E. Wt. Sand in in Hole C-D	1323	1390	1246	958	935
Inplace Dry Density Determination (Field Density Test)					
Container No.	A	B	C	1	2
- Burner Method -					
F. Wt. Wet Soil + Pan		866			747
G. Wt. Dry Soil + Pan		756			719
H. Wt Moisture F-G		110			28
J. Wt Pan		208			210
K. Wt. Dry Soil F-J		658			537
- Speedy Method -					
M. Dial Reading	13.7			7.48	
N. Sample Size Factor	1			1	
P. % Moisture - Wet Wt. H/K*100 or M*N	13.7	16.7		7.48	5.21
R. Total Wt. Wet Mat. From Hole	1773	1758		1368	1313
S. Wt.Moist. in Mat. from Hole R x P/100	243	294		102	68.4
T. Dry Wt.of Mat. from Hole R - S	1530	1464	1382	1266	1245
U. Unit Wt. of Sand kg/m³	97.5	97.5	97.5	97.0	97.0
V. Dry Density kg/m³ T/E x U	112.8	102.7	108.1	128.2	129.2
Relative Density Determination					
W. Std Maximum Density	111.0	109.0	109.0	127.0	127.0
Specs.	100	95	95	100	100
Relative Density % V/W x 100	102	94	99	101	102
Curve No.	3	5	5	7	7
Inspector: Sandy Cohen	SC	SC	SC	SC	SC
Project Engineer Clay Seems					

See Grading and Base Manual 5-692.251 (M) or 5-692.251 (E)

5-692.200- Figure 20. Example Relative Density Determination (Form G&B-304)

5-692.253. Relative Moisture

A. General

Relative moisture is the ratio, in percent, of the moisture content of an embankment soil, base or subbase aggregate to the optimum moisture of the material. Moisture content of the material is determined by, "5-692.245. Moisture Test" and the optimum moisture is determined by, "5-692.222. Moisture-Density Test Method (Proctor)".

Where the specified density method of compaction is specified or when constructing a control strip, the moisture content of the soil or aggregate is determined at the time the material is being compacted.

The relative moisture is compared to the specified moisture content to determine if moisture content required for compaction of the material is acceptable.

B. Calculations

Relative moisture is calculated by using the following formula:

Relative Moisture (%) = (Moisture Content (%)/Optimum Moisture Content (%)) x 100%

Example:
Moisture Content (% of Dry Wt.) = 15.9%
Optimum Moisture (% of Dry Wt.) = 16.6%

$$\text{Relative Moisture} = \frac{15.9}{16.6} \times 100\% = 96\%$$

Figure 21, Form G&B-105, combines the moisture test and the relative moisture determination.

TP-21850-02 (4/21/02)

Minnesota Department of Transportation

Office of Materials and Road Research

Page No. 6

Relative Moisture Test Grading & Base Construction

S. P. No: 0210-34

Test Identification Data					
Date	7-15-01	7-15	7-16	7-16	
Test No.	33	33A	34	35	
Soil Class or 3138 Class	CL	CL	CL	C	
Station	302+00	301+98	524+00	427+85	
Roadway: Position to Center Line	8' Rt	6' Rt	℄	5' Lt	
Depth Below Grade	2'	2'	6'	4'	
Moisture Determination					
Container No.	A	B	A		
- Burner Method -					
A. Wt. Wet Material + Pan	643	615	576		
B. Wt. Dry Material + Pan	581	556	539		
C. Wt Moisture A-B	62	59	37		
D. Wt Pan	192	152	192		
E. Wt. Dry Soil B-D	389	404	347		
- Speedy Method -					
F. Dial Reading				15.9	
G. Sample Size Factor				1	
H. % Moisture Wet Wt. G x F				15.9	
J. % Moisture Dry Wt. C/E x 100 *	15.9	14.6	10.7	18.9	
Relative Density Determination					
Minimum Specs	65	65	0	0	
Maximum Specs	102	102	115	115	
K. Standard Optimum Moisture	15.4	15.4	15.4	23.5	
L. Relative Moisture % J/K x 100	103	95	69	80	
Curve No.	1	1	1	1	
Inspector: M. Goetz	MG	MG	MG	MG	
Project Engineer Pete Loam					

See Grading and Base Manual 5-692.253 (M) or 5-692.253 (E)

*J=H/(1-H/100)

5-692.200-Figure 21. Relative Moisture Determination (Form G&B-105)

5-692.255. Dynamic Cone Penetrometer (DCP)

A. General

The Dynamic Cone Penetrometer consists of two 16mm (5/8") diameter shafts coupled near the midpoint. The lower shaft contains an anvil and a pointed tip which is driven into the aggregate by dropping a sliding hammer contained on the upper shaft onto the lower anvil. The underlying aggregate strength (density) is determined by measuring the penetration of the lower shaft into the aggregate after each series of a predetermined number of drops. This value is recorded in millimeters (inches) per blow and is known as the Penetration Index (PI).

B. Equipment

The DCP is comprised of the following elements (Figure 22 a and b)

1. Handle: The handle is located at the top of the device. It is used to hold the DCP shafts plumb and to limit the upward movement of the hammer.

2. Hammer: The 8 kg (17.61 lb.) Hammer is manually raised to the bottom of the handle and then dropped (allowed to free fall) to transfer energy through the lower shaft to the cone tip. It is guided by the upper shaft.

3. Upper Shaft: The upper shaft is a 16mm (5/8") diameter steel shaft on which the hammer moves. The length of the upper shaft allows the hammer to drop a distance of 575mm (22.6").

4. Anvil: The anvil serves as the lower stopping mechanism for the hammer. It also serves as a connector between the upper and lower shaft. This allows for disassembly which reduces the size of the instrument for transport.

5. Lower Shaft: The lower shaft is a 16mm (5/8") diameter steel shaft, 900-1200mm (35 47") long, marked in 5mm (0.2") increments for recording the penetration after each hammer drop.

6. Cone: The cone measures 20mm (0.787") in diameter. The cone tip should have a 60 degree angle (Figure 22, b).

Caution:

1. Always use caution to avoid pinching fingers between the hammer and the anvil. During testing, use the handle to hold shafts plumb. Do not hold the DCP near the anvil area.

2. It is important to lift the hammer slowly and drop it cleanly, allowing at least two seconds to elapse between drops. Lifting and dropping too rapidly may affect results because the hammer's full energy may not be allowed to transfer to the lower shaft. This will cause incorrect test results.

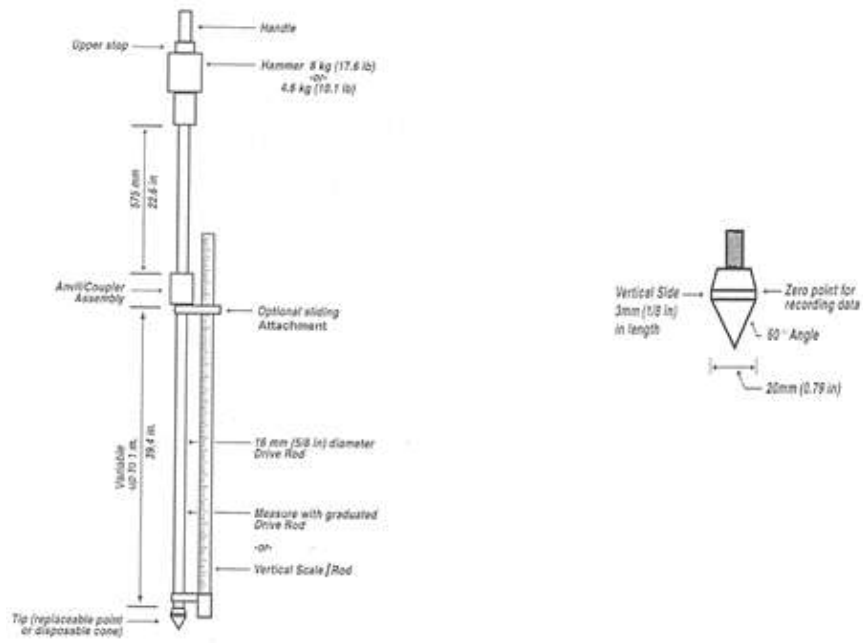

a b (replaceable point tip)

5-692.200- Figure 22. Dynamic Cone Penetrometer (DCP) Device

C.1 Procedure – Base Aggregate

1. Locate a level and undisturbed area (test site) that is representative of the material to be tested.

2. Place the DCP device on the base aggregate test site. To properly seat the DCP (coned tip), two hammer blows are required. Therefore, carefully raise the sliding weighted hammer until it meets the handle, then release the hammer under its own weight. Repeat this process one more time for a total of two complete blows. If the seating processes cause initial penetration exceeding 40mm (1.6"), move the test site at least 12" (300 mm) from the previous test location and reseat the cone. If the second test site still does not meet the seating criteria, DCP testing for density cannot proceed. The area being tested must be re-compacted.

3. Record the penetration measurement after seating using the graduated rule on the DCP. The measurement is taken to the nearest 2.5mm (0. 1 "). (Use form G&B-204), Figure 23).

4. Carefully raise the hammer until it meets the handle, then release the hammer under its own weight. Repeat this process two more times for a total of three times.

5. Record the final penetration measurement using the graduated rule on the DCP. The measurement is taken to the nearest 2.5mm (0.1").

6. Subtract the measurement in step 3 from the measurement in step 5 and then divide the difference of the measurements by the number of blows (3) required for testing. If necessary, follow the formula on the test form to convert from inches to mm. Round off all

test results to the nearest mm or one tenth of an inch, see section, “5-692.705. Procedures for “Rounding Off”.

C.2. Procedure: Edge Drain Trench Filter Aggregate (2502)

1. After the compaction of the first 50” (15 m) of filter aggregate within the edge drain trench has been completed, determine the location of three test sites that are 10’ (3 m) apart within that first 50’ (15 m).

2. Calculate the number of hammer drops (blows) necessary to 'properly test the trench filter aggregate but not damage the edge drain pipe by subtracting 6” (150mm) from the depth of the trench to be tested and dividing that total by 75 for metric measurements or 3 for English measurements. If necessary, round this number down to the next whole number, Figure 24.

   Example: If the trench depth equals 650mm (26").
   then 650mm (26") minus 150mm (6") equals 500mm (20").
   then 500mm (20") divided by 75 (for Metric) or 3 (for English) equals 6.7 or 6.

3. Place the DCP on test site #1 and seat the coned tip of the device by slightly taping the lower anvil with the hammer until the coned tip is just out of sight.

4. After seating, record the penetration measurement using the graduated rule on the DCP. The measurement is taken to the nearest 2.5mm (0. 1"). (Use form G&B-204, Figure 25).

5. Carefully raise the hammer until it meets the handle, then release the hammer under its own weight. Repeat this process until the total number of hammer drops equals the required number of blows as calculated in step 2. Also, beware and avoid the chance of penetrating the edge drain pipe at the bottom of the trench when the compaction of the trench is less than passing.

6. Record the final penetration measurement from the graduated rule on the DCP. The measurement is taken to the nearest 2.5mm (0.1”)

7. Subtract the measurement in step 4 from the measurement in, step 6 and then divide the difference of the measurements by the number of blows required for testing. The result is the penetration index. If necessary, follow the formula on the test form to convert from inches to mm.

8. Use the same procedures as outlined above for testing sites #2 and #3.

9. Add the three penetration index results from test site #1, #2 and #3 and divide that total by 3 in order to calculate the average of all three tests. Round off the average of the tests to the nearest mm (0.1") see section, “5-692.705. Procedures for “Rounding Off”.

D. Maintenance and Handling

Due to the fact that the Dynamic Cone Penetrometer (DCP) is driven into the ground, sometimes into very hard soil layers, regular maintenance and care are required. To ensure that the DCP operates properly, the following guidelines must be followed.

1. Monitor the condition of the connection bolt. Extra bolts should be kept in the DCP carrying case because they frequently become stripped or broken and may need to be replaced during testing.

2. Keep the upper shaft clean. Lubricate very lightly with oil if binding develops. Frequently wipe both shafts clean with a soft cloth during use.

3. Monitor the DCP for excessive wear on any of the components and make repairs as needed. Because the DCP is a standardized testing device, its overall weight and dimensions must not change from specifications.

4. The cone tip should be replaced when the diameter of its widest section is reduced by more the 10 percent (2mm [0.08 inch]) or the cone's surface is gouged by rocks. Inspect the cone tip before and after each test. Nevertheless, the cone tip should be replaced at least once a year.

5. Never extract the DCP from the test hole by forcefully striking the hammer against the handle. Striking the handle causes accelerated wear and may lead to broken welds and connections. At least once a year, all welds on the DCP should be critically inspected for hairline or larger cracks.

6. Do not lay the device on the ground when not in use. The DCP should be kept in its carrying case to avoid bending the shafts. Straightness of the shafts is extremely important. The hammer cannot free fall if the shafts are bent. The straightness of the shafts should be critically measured and reviewed each year prior to the start of construction season.

Minnesota Department of Transportation

Office of Materials and Road Research

TP-2170-02 (7/2000)

Density Test for Base Aggregate and Edge Drain Trench Filter Aggregate

(Penetration Index Method by DCP*)

SP 0215-18 TH 10 Tester D.C. Pea

LOC Anoka DIST. MW

Test No.	Aggregate Class or Filter Aggregate	Station	Lift Thickness or Trench Depth	(A) 2nd Reading	(B) 1st Reading	(C) Difference	(D) Blows	(E) Penetration Index (PI)	(••) Edge Drain (PI) Average	Pass or Fail	Date
1	5	25+00	6"	5.9"	4.9"	1.0"	3	0.3"/8mm		P	5-18-02
2	5	26+25	6"	6.0"	4.8"	1.2"	3	0.4"/10mm			
3	7B	18+10	3"	4.8"	3.7	1.1"	3	0.4"/10mm		P	5-20-02
4	7B	21+05	3"	4.6"	3.7	0.9"	3	0.3"/8mm			

See Grading and Base Manual

(••) Used for Edge Drain Tests Only
*Dynamic Cone Penetrometer

For Base Aggregate

C = A – B

E = C ÷ D

(Conversion from inches to mm = E x 25)

Penetration Index (E) = 10 mm (0.4 in.) or less = Passing

For Filter Aggregate

C = A – B

E = C ÷ D

(Conversion from inches to mm = E x 25)

Penetration Index (E) = 75 mm (3 in.) or less = Passing

cc: Project File

5-692.200-Figure 23. Penetration Index Method Example (Form G&B-204)

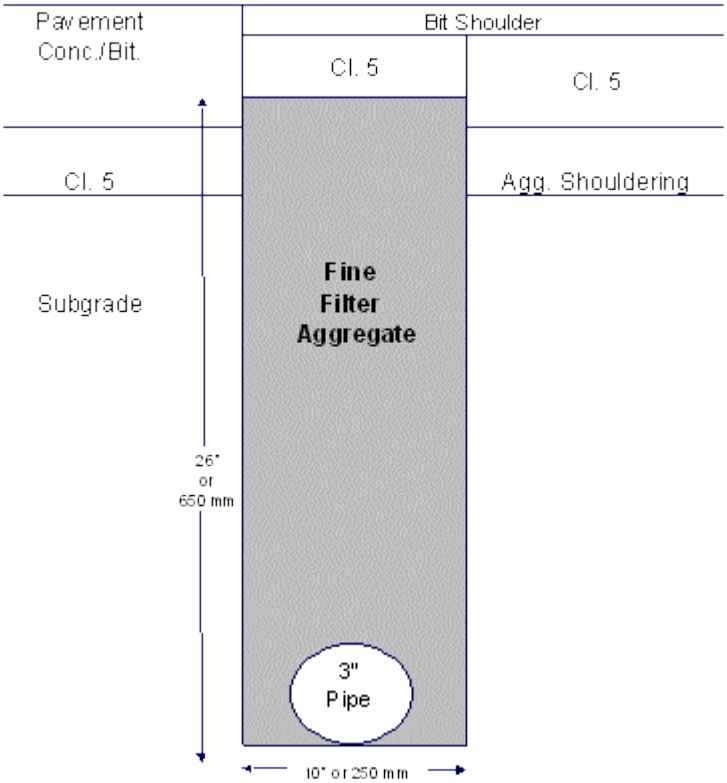

5-692.200-Figure 24. Edge Drain Trench with Filter Aggregate Detail

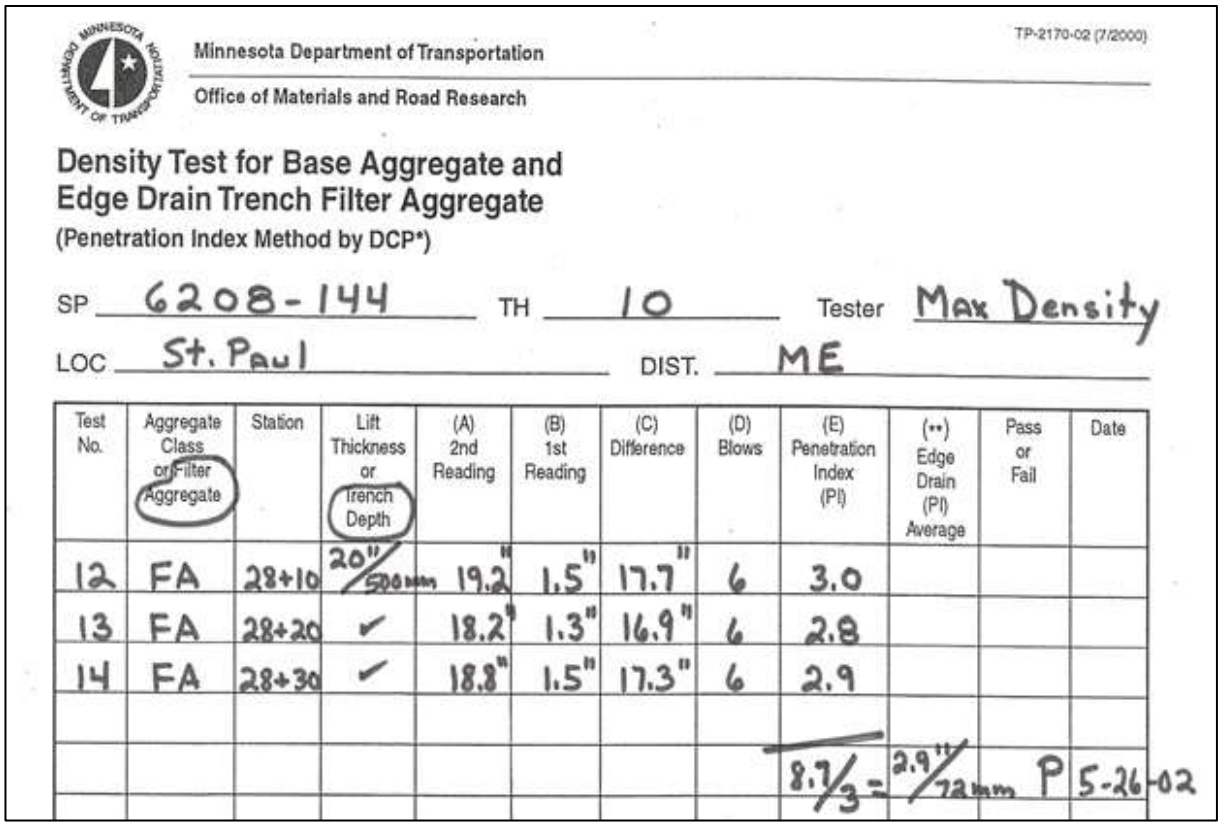

Minnesota Department of Transportation

Office of Materials and Road Research

TP-2170-02 (7/2000)

Density Test for Base Aggregate and Edge Drain Trench Filter Aggregate

(Penetration Index Method by DCP*)

SP 6208-144 TH 10 Tester Max Density

LOC St. Paul DIST. ME

Test No.	Aggregate Class or Filter Aggregate	Station	Lift Thickness or Trench Depth	(A) 2nd Reading	(B) 1st Reading	(C) Difference	(D) Blows	(E) Penetration Index (PI)	(**) Edge Drain (PI) Average	Pass or Fail	Date
12	FA	28+10	20"/500mm	19.2"	1.5"	17.7"	6	3.0			
13	FA	28+20	✓	18.2"	1.3"	16.9"	6	2.8			
14	FA	28+30	✓	18.8"	1.5"	17.3"	6	2.9			
								8.7/3 =	2.9"/72mm	P	5-26-02

5-692.200-Figure 25. Penetration Index Example for Filter Aggregate(Form G&B-204)

5-692.260. Pulverization Determination for Binder Soils

A. Scope
This test method covers a procedure for the field determination of the degree of pulverization of binder soils.

B. Equipment
1. 30 lb. (27.2 kg) capacity electronic scale with decimal graduations in tenths of a lb. (kg).
   Note: Interpolate reading to the nearest 0.05 kg for metric only.

2. Two 12 (quart) liter pails

3. 3/4" (19 mm) sieve, No. 4 (4.75 mm) sieve

C. Procedure
1. For rate of testing see section, "5-692.100. Sampling, Random Sampling and Splitting" and the "Schedule of Materials Control". Always use the testing rates contained within the contract Schedule of Materials Control, specifications and special provisions.

2. Obtain a representative sample weighing approximately 30 lbs. (15 kg).

3. Use the moist weight for all computations.

4. Record the moist weight of the sample.

5. Pass the sample through the required sieve sizes in such a manner that disintegration of the soil clods will not occur. The fraction retained on each sieve shall be weighed on the electronic scale and the weight recorded.

6. Compute the percent of material passing each sieve size as follows:

(Moist weight of material passing sieve size/moist weight of total sample) x 100%

5-692.270. Test Rolling

A. Scope
Test rolling of subgrades with a heavy roller is a procedure performed to evaluate the adequacy of the roadbed construction relative to uniformity and consistency of the subgrade support in terms of strength, stiffness, density and moisture content. The test roller will detect weak /unstable subgrade areas due to inadequate compaction (both in terms of moisture content and density), and/or unstable soils to a depth of five feet. The detected failed areas will require corrective measures. These measures may include removing the unstable/unsuitable soils, reducing the moisture content by aeration and the recompaction of the soil, etc.

B. Equipment
1. The test roller shall comply with the provisions of Specification 2111. The Inspector should check the equipment for compliance.

2. The test roller shall be weighed. If certified weights are furnished, these may be accepted. Special care could be taken to measure tire pressure correctly.

C. Procedure
The procedure is provided in Specification 2111.

D. Record
The roller, weights, tire pressure, and record of failing areas should be recorded in the Inspector's diary.

E. Test Application
Test rolling failures are generally related to excessive moisture, lack of density, or unsuitable soil. Weak areas disclosed by the test roller should be investigated and the cause determined. The failing areas should then be corrected and re tested as provided for in Specification 2111.

Test rolling in accordance with MnDOT 2111 is not, generally, recommended for the following situations.

1. Subcut areas that are less than 30" (750 mm) in depth. Test rolling areas with shallow excavations probably will not pass the 2111 requirements.

2. Roadbed construction within municipalities having shallow underground utilities.

3. Roadway segments with numerous, closely spaced, shallow, underground structure (culvert, storm sewers, other utilities, etc.). In all situations where test rolling is utilized, shallow structures must be protected against damage from the test roller. Structures should have at least 30" (750mm) of soil cover prior to testing the subgrade. This depth may require the temporary increase in soil cover over the structure (construction of a blister).

4. Roadway segments with relatively closely spaced bridge overpasses.

5. Areas where geo-synthetics are placed within the upper 5' (1.7mt) of the embankment.

5-692.280. Modified Moisture-Density Test

A. General
The modified moisture density (Proctor) test is used to determine the relationship between the moisture content and the density of soil or aggregate material (including bituminous stabilized materials) when compacted by following a standard procedure. This method uses a 10-lb rammer and an 18-inch drop and is consistent with AASHTO T 180, Method D.

This method determines the maximum dry density by varying the moisture content. The optimum moisture content is the moisture content (expressed as percent of dry weight) of the material at the maximum density. When compaction is controlled by the specified density method, the moisture content of the material being placed is compared to the optimum moisture content and the density of the in place compacted material is compared to the maximum density to determine specification compliance.

Materials with a moisture content lower than the optimum require more compactive effort than the same soil with a moisture content near "optimum". Materials with a moisture content higher than "optimum" tend to be unstable and may be impossible to compact.

B. Equipment

1. Proctor mold: A cylindrical metal mold having a capacity of 1/13.33 ft^3 with an internal diameter of 6-inches and a height of 4.584 ± .005 inches. The mold shall have a detachable collar assembly and base plate (Figure 9, a).

2. Rammer: Metal rammer having a flat circular face of 2 inch diameter and weighing 10 lbs. The rammer shall be equipped with a guide sleeve to control the height of drop to a free fall of 18 inches above the soil (Figure 9, c).

3. Electronic platform scale: The platform scale shall have a minimum capacity of 30 lbs.; it shall be sensitive to 0.01 lb. and the minor graduations on the indicator shall be 0.01 lb.

4. Electronic scale: The scale shall have a minimum capacity of 2500 g; it shall be sensitive to 0.1 g and the minor gradations on the indicator shall be for 0.1 g.

5. Drying oven or stove.

6. Mixing tools (Figure 9, b).

7. Spatula and butcher knife (Figure 9, b).

8. Box sieves, 2", 3/4", 3/8", No. 4 with bottom pan.

9. Concrete compaction base. A block of concrete weighing not less than 200 lbs. supported on a stable foundation; a sound concrete floor or other solid surface found in concrete box culverts, bridges and pavement. Figure 9 shows typical test equipment set up.

C. Sample Preparation

1. Obtain a sample of the reclaimed material according to the procedures described in "D. Bituminous Stabilized Base (SFDR) – Proctor Test using Modified Effort of section, "5-692.180. Sampling Bituminous Stabilized Materials".

2. If the soil sample is damp, dry it until it becomes friable under a trowel. The sample may be air dried or dried in the oven or on the stove such that the temperature does not exceed 140ºF.

3. Sieve an adequate quantity of the sample over the ¾-inch on bottom pan. Break up all lumps to pass the sieves.

4. Discard the stones retained on the ¾-inch sieve.
   Note: Do not replace oversize particles with finer particles, even at the same ratio (percentage) of coarse material, to compute maximum density.

5. Select about 25 lbs. (11 kg of the prepared material using a procedure described in sections:
   - "5-692.141. Quartering Method of Sample Size Reduction", or
   - "5-692.142. Ring and Cone Method of Sample Size Reduction", or
   - "5-692.143. Riffle Splitter Method of Sample Size Reduction"

D. Procedure: Multi-Point (Standard Method using modified effort)
This test consists of compacting a portion of a soil sample in a mold at different moisture contents ranging from dry to wet. At least 4 samples will be run. The samples will differ in moisture content by one to two percent with the driest sample being about four percentage points below optimum moisture. This would result in two of the samples being below optimum, one near optimum and one over optimum. A valid test will have 2 points below optimum.

1. Thoroughly mix the selected representative sample with sufficient water to dampen it to approximately 4 percentage points below optimum moisture content. A good indication of the soil being nearly right for the first point is if the soil barely forms a "cast" when squeezed.

2. Determine the weight of the mold and base plate. Record the weight as "B Wt. Mold" (Figure 10). DO NOT INCLUDE THE WEIGHT OF THE COLLAR.

3. Place the assembled mold, including collar, on the concrete compaction base.

4. Place enough of the sample into the mold for one layer.
   Note: The mold is filled with five equal layers of compacted material.

5. Compact the loose material by 56 uniformly distributed blows from the rammer dropping freely from a height of 18" above the soil.

6. Repeat Steps 4 and 5 until the five layers are placed and compacted.

7. Remove the collar and carefully trim the compacted soil with the knife until it is even with the top of the mold (check with the spatula). Remove any stones dislodged by trimming and fill the holes by carefully pressing finer material into place. Trim around any stones that are at least half buried and solidly seated.

8. Clean all the loose material from the mold and base plate and weigh it on the platform scale to the nearest gram. Record the weight as "A Wt. Wet Soil + Mold".

9. Remove the mold from the base plate and loosen the locking devices so that the compacted material can be removed from the mold.

10. Quarter the compacted material by slicing twice vertically through the compacted soil. Select one of the quarters and weigh immediately. Conduct the moisture determination per, "5-692.245. Moisture Test".
    Note: A representative sample must consist of nearly equal portions of material from all three layers. When the "Speedy" method is used, take the sample the same way as the burner dry method and use a representative portion for the moisture determination.

11. Thoroughly break up any remaining portion of the molded specimen and add it to the sample being tested.

12. Add enough water to increase the moisture content about two percentage points.
    Note: In each repetition the material shall be thoroughly mixed before compaction to assure uniform dispersion of the moisture throughout the sample.

13. Repeat Steps 4 thru 12 until the "Wt. Wet Soil + Mold" determined in Step. 8 either decreases or fails to increase. At this point the compacted material should be soft and spongy; granular material may not be very spongy but will be extremely wet. The spongy condition indicates that the moisture content of the sample exceeds optimum.

E. Calculations

1. Wet Density
   A = Wt. Wet Soil + Mold lb.
   B = Wt. Mold lb.
   C = Wt. Wet Soil (A - B)
   D = Wet Density, lbs/ft^3 (C x 13.33)
   Note: 13.33 = Number of "mold castings" per ft^3

Example:
   A = 24.892 lbs.
   B = 15.184 lbs.
   C = 24.892 – 15.184 = 9.708 lbs.
   D = 9.708 x 13.33 = 129.4 lbs/ft^3

2. Percent Moisture Burner Method
   E = Wt. Wet Soil + Pan grams
   F = Wt. Dry Soil + Pan grams
   G = Wt. Moisture (E - F)
   H = Wt. pan, grams
   I = Wt. Dry Soil (F - H)
   J = % Moisture, Wet Wt. [G/(E - H)] x 100
   K = % Moisture, Dry Wt. = (G/I) x 100 Example:
   E = 365.6 grams
   F = 350.2 grams
   G = 365.6 - 350.2 = 15.4 grams
   H = 93.8 grams
   I = 350.2 - 93.8 = 256.4 grams
   K = (15.4/256.4) x 100 = 6.0%

3. Speedy Method

If the % Moisture, Wet Wt. (J) is recorded, determine and record the % Moisture, Dry Wt. (k) by using Table 13 or the following formula:

$$K = \frac{100J}{100 - J}$$

Example:

J = 5.6 (gauge reading from Speedy Moisture Meter)

$$K = \frac{100 \times 5.6}{100 - 5.6} = \frac{560}{94.4} = 5.9\%$$

4. Dry Density

   L = Dry Density, lbs/ft^3 [*pcf*] (kg/m^3) = $\left(\frac{D}{100 + K}\right) \times 100$

Example:

English: $L = \left(\frac{129.4}{100 + 6.0}\right) \times 100 = 122.4$

F. The Maximum Density and Optimum Moisture Content

The Maximum density and optimum moisture are determined by graphing the information obtained by compacting the samples at various moisture contents. Each moisture content relates to a wet density and to a dry density.

	Point No.			
	No. 1	**No. 2**	**No. 3**	**No. 4**
D. Wet Density	129.4	134.6	138.8	138.4
K. % Moisture	4.2	6.0	8.4	10.5
L. Dry Density	124.2	127.0	128.0	125.3

Important Notice: The drawing of the "wet" curve is not required if the laboratory tester has compacted four adequate points as described previously. But, if the "wet" curve is not drawn, the "dry" curve must be computer generated. All discrepancies between companion samples shall be resolved by plotting the "wet" curve by hand and interpolating the "dry" curve points as shown below.

1. Plot the wet densities against the moisture contents.

2. Draw a smooth curve thru the plotted points. (Figure 11). This is the "wet curve".

3. Plot the dry densities against the moisture contents (Figure 11). Additional "dry points" may be interpolated from the "wet curve".

   Example: In Figure 11, Points P and PP are used to establish points P1 and PP1 on the "dry curve".

   D. (Wet Density) for Point P = 125.0 lbs/ft^3
   K. (Moisture) for Point P and P1 = 15.4%.
   L. (Dry Density) for point P1 = $\left(\frac{125.0}{100 + 15.4}\right) \times 100 = 108.3\, lbs / ft^3$
   D. (Wet Density) for Point PP = 126.2 lbs/ft^3
   K. (Moisture) for Point PP and PP1 = 16.2%.

L. (Dry Density) for point PP1 = $\left(\frac{126.2}{100+16.2}\right)\times 100 = 108.6\, lbs/\, ft^3$

4. Draw a smooth curve thru the plotted points (Figure 11). This is the "dry curve".

5. Read the maximum density and optimum moisture from the peak of the "dry curve" (Figure 11). Maximum Density = 108.6 lbs/ft^3; Optimum Moisture = 16.2%.
   Note: Figure 12 is an example of computer generated proctor curves and does differ very slightly from the hand drawn version of Figure 11.

G. Procedure: One-Point Moisture Density (Proctor) Using Modified Effort

Use this method for determining the standard maximum density and optimum moisture. This method is for field testing only. Never use the one-point Proctor method in lieu of a "multi-point" moisture-density test. Use the one-point method to analyze subtle changes, including, but not limited to changes in: color, texture, structure (i.e. RAP to granular base ratio), etc. Also, use one-point Proctors to verify changes in maximum density and optimum moisture indicated by relative densities failing to meet specified density requirements even though operations have not changed and previous tests have passed. Relative density tests exceeding 106 percent suggest zero air voids and indicate a possible change in maximum density. Run a one-point Proctor to confirm the suspected change. Use the "multi-point" moisture density test for the material closest to the soil with this subtle change to check the testing accuracy of the one-point Proctor. A reasonable variation should not exceed plus or minus 3 lbs/ft^3. If the variation exceeds 3 pounds, run another "multi-point" Proctor.

1. Obtain a representative sample of the reclaim material according to the procedures described in "D. Bituminous Stabilized Base (SFDR) – Proctor Test using Modified Effort of section, "5-692.180. Sampling Bituminous Stabilized Materials".

2. Sieve the sample through the ¾-inch sieve. If it is necessary to dry the sample, do not allow it to become "oven" or "stove" dry.

3. Weigh the material retained on the ¾-inch sieve, record the weight and discard the material.
   Note: Do not replace oversize particles with finer particles, even at the same ratio (percentage) of coarse material, to compute maximum density.

4. Weigh the portion of the sample passing the ¾-inch sieve. Record the weight.

5. Determine the weight of the mold and base plate. Record the weight.

6. Place the assembled mold, including the collar, on the compaction base.

7. Scoop enough material into the mold for 1 layer.

8. Compact the loose material with 56 evenly distributed blows with the rammer dropped from 18 inches.

9. Repeat Steps 10 and 11 until 5 layers are in-place.

10. Remove the collar and trim the compacted material with a knife until even with the top of the mold (Check with a spatula).

11. Brush all loose material from the mold and base plate and weigh the mold to the nearest 0.01 lb. on the platform scale. Record the weight.

12. Calculate the wet weight per cubic foot of the compacted material.

    F = 30 (D - E)
    F = Wet wt. per ft^3
    D = Weight of wet soil and mold (Step 14).
    E = Weight of the mold (Step 8).

    Example: D = 25.3 lbs., E = 15.2 lbs.
    F = 13.33 (25.3 – 15.2)
    F = 134.3 lbs/ft^3

13. Remove the mold from the base plate and loosen the locking devices so the compacted material can be removed from the mold.

14. Select a representative sample for a moisture test. Conduct the test according to the procedures in 5.692.245, Record the results.

5-692.281. Moisture Test for Bituminous Stabilized Materials

When asphalt emulsion is used, determine the total fluid content per section, "5-692.245. Moisture Test" except that the Calcium Carbide Moisture Tester shall not be used. The sample shall be dried to a constant weight in an oven or over an open burner at a temperature not to exceed 230° F (110° C). If the sample is dried over an open burner, a sand bath must be used and the heat applied cautiously in order to keep the sample under 230° F (110° C). A sand bath is constructed by placing a 1" (25mm) to1-1/2" (40mm) layer of sand in a metal pan. The sample, in the drying pan, is then placed on the sand bed to dry. The total fluid content is compared to the Optimum Moisture of untreated base aggregate or soils to determine the relative moisture of the mixture at time of compaction. Constant weight is defined as no change greater than 0.5 grams in 15 minutes.

Example: Total fluid content of the treated base aggregate at time of spreading and compacting = 10.5%

Optimum Moisture of the untreated base aggregate = 11.0%

Relative Moisture of the mixture (%) = $\frac{10.5}{11.0} \times 100\% = 95\%$

5-692.282. In-Place Density Using Nuclear Methods

A. General

This test method is intended to measure the in-place density of compacted bituminous stabilized base layers (SFDR) and cold in-place recycled bituminous layers (CIR). It is based off of AASHTO Designation 310.

1. Do not attempt to operate a nuclear gauge before thoroughly reading the Instruction Manual.

2. Do not attempt to operate a nuclear gauge without the proper training, license and certifications.

B. Equipment

1. A recognized nuclear moisture-density gauge containing a radioisotope, detectors and related circuitry. The gauge shall be capable of determining densities by either the backscatter or direct transmission methods.

2. A reference standard for the purpose of taking standard counts, and for checking equipment operation

3. Calibration curves or tables for the gauge

4. A drill rod and combination guide-scraper plate for preparing the testing site

5. Manufacturer Instructional Manual

C.1 Procedure: Backscatter

Backscatter or Backscatter/Air-Gap Ratio Method of In-Place Nuclear Density and Moisture Content.

1. Place the reference standard in a position recommended by the manufacturer to obtain standard counts.

2. Allow the gauge to warm up as suggested by the manufacturer.

Take one automatic four-minute standard count per manufacturer instructions. This count should be within 1% of the latest standard count established for the gauge. In the event the standard count varies by more than 1%, take four additional automatic four-minute standard counts. Use the average of the five four-minute counts to establish a new standard count for the gauge.

3. If the day-to-day shift in the standard count varies more than 2% for moisture or 1% for density, reset the gauge on the standard and repeat the procedure in 3.

Keep a log of the gauge standard counts.

4. Standard counts should be taken twice a day to detect any shift during daily use.

D. Site Preparation

1. Select a location for test where the gauge will be a least 6 in. (150 mm) away from any vertical projection. Be sure the vehicle is at least 10 ft. (3 m) away from the test site.

2. Remove all loose and disturbed material, and remove additional material as necessary to reach the top of the compacted lift to be tested.

3. Prepare a horizontal area, sufficient in size to accommodate the gauge, using the scraper plate supplied with the gauge; by planing to a smooth condition so as to obtain maximum contact between the gauge and material being tested. Make sure the gauge sits solidly on the site without rocking.

4. The maximum depressions beneath the gauge shall not exceed 1/8 in. (3 mm). Use native fines or fine sand to fill voids and level the excess with the scraper plate. The total area thus filled with native fines or sand should not exceed ten percent of the bottom area of the gauge.

E. Moisture Determination

1. Prepare test site as described in C.

2. Obtain a one-minute moisture count.

3. Determine the moisture content form the calibration data supplied with the gauge.

4. The moisture measurement is based upon the thermalization of fast neutrons by hydrogen atoms. Because bituminous materials contain hydrogen other than free water or may contain thermalizing elements other than hydrogen, not less than ten moisture samples should be oven dried to correct the calibration data. If the gauge reading is higher than the values obtained by oven dry samples, the error is due to hydrogen containing materials, and the correction may be made by subtracting a constant value from the gauge reading. If the gauge reading is lower than that obtained by oven drying, the error is likely due to materials which absorb thermalized neutrons. In this case, the error is not a constant offset, but varies directly with the moisture content. The compensation is made by adding the full error at moisture contents used to obtain the error data and reducing the added value at lower moisture contents. At zero moisture, the error would be zero.

F. Density Determination - Direct Transmission

1. Place the guide plate on the site for the moisture determination and drive the drive pin through the guide to a depth at least 4 in. (100 mm) below the depth of material to be measured. Remove the drive pin by pulling straight up in order to avoid disturbing the access hole.

2. Place the gauge over the access hole and push the index handle down until the source has reached the desired depth.

3. With the source at the desired depth, pull the gauge so that the probe is in contact with the near side of the hole, take and record a one minute density count. Determine the wet density from the calibration data supplied with the gauge.

G. Calculations

1. When determining the moisture correction described in D4, use the oven dry percent of moisture and the gauge wet density to calculate the moisture content in kilograms per cubic meter (lbs/ft^3) as follows:

   % Moisture + 100
   % Moisture x Wet Density

   Moisture Content [kg/m^3 (lbs/ft^3)] =

2. Calculate the dry density as follows:

   Dry Density = Wet Density - Moist. Content [kg/m^3 (lbs/ft^3)]

3. Calculate the percent moisture as follows:

   % Moisture = (Moisture Content x 100)/(Dry Density)

5-692.284. Measuring Grinding Depth in the Field

A. General

Measuring grinding depth in the field is a method of determining the reclamation, recycling or grinding depth of reclamation equipment for: Full Depth Reclamation (FDR), Stabilized Full Depth Reclamation (SFDR) and Cold In-Place Recycled (CIR) Bituminous projects. This method uses a straight edge and a tape measure.

B. Apparatus

1. Tape measure A tape measure of measuring stick accurate to the nearest 0.5-inch.

2. Straight Edge – A straight edge long enough to be placed on level ground and reach the tape measure.

3. Shovel – A shovel to dig down to the bottom of the reclaim material depth.

C. Procedure

1. Be aware of your surroundings! Always wear the proper safety equipment and never stand behind a Reclaimer while it is in motion, wait until it is a safe distance away before conducting measurements.

2. Use a shovel to reach the bottom of the reclaim layer, use the adjacent bituminous pavement as a guide.

3. Place the straight edge on the bituminous pavement and the tape measure on the bottom of the reclamation cut and measure the cut depth the nearest 0.5-inch. Measure the cut depth on both sides. Ensure that the reclaiming machine is cutting "*square*".

5-692.285. Measuring Expansion Ratio and Half-Life of Foamed Asphalt in the Field

A. General

Foaming properties are indicative of the oil's viscosity (resistance to flow). Two important properties to characterize foamed asphalt are: half-life (the amount of time it takes for the volume of asphalt to decrease to half of the previous value) and the expansion ratio (the maximum volume, or height of the asphalt relative to an un-foamed state) Proper foaming properties are necessary to ensure that the foamed oil will disperse and mix well with the base materials. Foamed asphalt that does not foam properly will not create a uniform mix; but will create stringers (about the size of spaghetti noodles) and balls in the recycled mixture. This test method describes a measuring the expansion ratio and half-life of foamed asphalt (foamed AC) for use on Stabilized Full Depth Reclamation (SFDR), or Cold In-Place Recycled (CIR) Bituminous projects.

B. Equipment

1. Tape Measure: A tape measure or measuring stick accurate to the nearest 0.5-inch.

2. 5-gallon bucket – A 5-gallon bucket, or pail that is white (or light colored) on the inside

3. Stop watch, or other time piece

4. Wooden lath

C. Procedure

1. Be aware of your surroundings! Always wear the proper safety equipment and never stand behind a Reclaimer while it is in motion, wait until it is a safe distance away before conducting measurements. Foamed asphalt is HOT (+300ºF)!

2. Use the test nozzle on the reclaimer to foam oil into a white 5-gallon bucket. Measure the time (in seconds) using a stop watch that it takes for the oil to collapse to half of its' maximum volume (height). Record this time value as the "Half-Life"

3. Divide the maximum height reached by the foamed oil (on the wall of the bucket) by the height of the oil in the bottom of the bucket (measured on the lath). Record this value as the "Expansion Ratio"

5-692.200-Figure 26. Measuring Expansion Ratio

The half-life and expansion ratio are related to the foaming water in the reclaimer machine:

- The Half-Life decreases (bubbles collapse quicker) with an increase in foaming water
- The expansion ratio increases (bubbles get bigger) with an increase in foaming water

5-692.286-5-692.287. Measuring Field Application Rate Using Direct/Indirect Methods

A. Apparatus – Not Applicable (N/A)

B. Test Procedure

1. Once the proper application rate is established using the Direct Method (mineral stabilizing agent only) given in Section 5, make periodic checks of the spread rate by calculating the distance a load of mineral stabilizing agent should cover.

2. Example with Mineral Stabilizing Agent — The printout ticket for a cement tanker shows it is carrying 50,000 lbs [22,680 kg]. The application rate established by the mix design is 1.5% by weight as shown below. The spreader is set to cover a width of 12 feet. Cement application will start at Station 100+00. Determine at what station the tanker should run out.

First, find the cement application rate, in pounds from the mix design for a 6-inch (0.5-ft) stabilized layer:

$$136.1\frac{lbs\ \mathrm{Re}claim}{ft^2 \times ft} \times 0.015\frac{lbs\ Cement}{lbs\ \mathrm{Re}claim} \times 9\frac{ft^2}{yd^2} \times 0.5\,ft\ (6''\ Layer) = 9.2\frac{lbs\ Cement}{yd^2}$$

Next, determine the area that the tanker should cover at the design rate:

$$\frac{50{,}000\ lbs\ cement}{9.2\dfrac{lbs\ cement}{yd^2}} = 5{,}435\ yd^2$$

Now find the length the tanker will cover at a width of 12 feet:

$$\frac{5{,}435 yd^2 \times 9\dfrac{ft^2}{yd^2}}{12\ ft} = 4{,}076\ ft$$

The tanker should run out of cement at approximately Station 140+76. If the tanker runs out more than ± 2% (80 feet) of the estimated point, the spreader should be readjusted and recalibrated using the Direct Method given in Section 5.

3. Example with Asphalt Emulsion — The printout ticket for an emulsion transport shows it is carrying 50,800 lbs. (25.40 TON) which corresponds to 6008.99 GAL of Net Volume. The application rate established by the mix design is 4.0% by weight, or 3.00 gallons per square yard for a 6 inch thick stabilized section as shown above. The Reclaimer (which is 8 ft. wide) will make two passes, each over a width of 6 feet. Injection will start at Station 100+00. Determine at what station the tanker should run out.

Use the relationship:

$$L = \frac{9 \times E}{R \times W}$$

L = the length the transport will travel, feet
E = Emulsion contained in the tanker, gallons (reported on the invoice)
R = Recommended Application Rate, gal/yd^2 (from Mix Design)
W = Treatment Width, feet (Not the machine width)

$$L = \frac{9 \times 6{,}008.99\ gal}{3.00\dfrac{gal}{yd^2} \times (6\ ft \times 2)} = 1{,}502\ ft$$

The transport should run out of emulsion at approximately Station 115+02. To find the accepted range of the transport, use the following relationship:

$$L_{Allow} = \frac{9 \times E}{W}\left(\frac{1}{R_{low}} - \frac{1}{R}\right)$$

Where:
L_{Allow} = Allowable difference (±), feet from L found above
R_{Low} = Lower application rate, gal/yd^2 (i.e., from Mix Design R_{Low} = 3.00 – 0.2 = 2.8 gsy)

Other variables as defined previously.

$$L_{Allow} = \frac{9 \times 6{,}008.99\ gal}{(6\ ft \times 2)} \times \left(\frac{1}{2.8} - \frac{1}{3.0}\right) = \frac{54{,}080.91}{12} \times (0.3571 - 0.3333) = (4{,}506.74) \times (0.0238) = 107\ ft$$

If the transport runs out more than (107 feet) of the estimated point, the reclaimer should be recalibrated according to the manufacturer's recommendations and re-verified using the indirect measurement method.

5-692.290. SFDR Mix Design Procedure

B. Material Evaluation
The base rock shall have a washed gradation (ASTM C 117 and C 136) and sand equivalent (ASTM D 2419, method B) performed and reported. RAP shall have a dry or washed gradation and sand equivalent performed. Report the washed gradation on the equivalent blend.

Perform Modified Proctor compaction according to ASTM D 1557, method C to determine optimum moisture content at peak dry density. OMC shall be defined by a best fit curve from a minimum of four points. Material containing 20% or more passing the No. 200 sieve shall be mixed with target moisture, sealed, and set aside a minimum of 12 hours. All other material shall be set aside a minimum of 3 hours. If a material contains less than 4 percent passing No. 200, then this testing is not required.

C. Selection of Water Content for Design
Water content of specimens, not including water in the emulsion, shall be:

- 60 – 75 percent of OMC if SE ≤ 30
- 45 – 65 percent of OMC if SE > 30

Sand equivalent value (SE) is from the combined materials. If a material contains less than 4 percent passing the No. 200 sieve, or if no peak develops with the OMC curve, then fix the moisture content between 2 and 3 percent. Specimens shall be mixed with the required amount of water before the addition of emulsion. Specimens shall be mixed with the appropriate amount of water and allowed to sit sealed according to the same guidelines as used for Modified Proctor specimens.

D. Number of Specimens / Mixing
Samples shall have a weight before addition of water and emulsion to produce 70 to 80 mm tall compacted specimens (except for IDT testing).

Choose four emulsion contents that will bracket the design emulsion content. A minimum of two specimens at each of four emulsion contents shall be produced for short term strength testing. Two specimens shall be produced for maximum specific gravity. Four specimens at 120 to 140 mm tall at the design emulsion content shall be produced for thermal cracking (IDT).

A mechanical mixer shall be used that has a bowl of 10 to 12 inches in diameter. It shall rotate on its axis at 50 to 75 revolutions per minute. A mixing paddle which makes contact with the bottom side of the bowl shall rotate on its axis at twice the bowl rotation rate and in the opposite rotation direction as the bowl.

Aggregate material and emulsion shall be mixed at a temperature of 20 to 26C. Water shall be mixed for 60 seconds. Emulsion shall be mixed for 60 seconds.

If other materials are added, such as lime or cement, then they shall be introduced in a similar manner as the will be on the project. For example, if lime is incorporated a day or more before mixing with emulsion, then it shall be added to the wet aggregate a day or more before mixing with emulsion. If lime is incorporated as a slurry, then it shall be incorporated as a slurry in the laboratory.

E. Curing before Compaction
Loose specimens shall be cured individually in plastic containers of 4 to 7 inches (100 to 180 mm) height and 6 inches (150 mm) diameter. Specimens shall be cured at 40C for 30 (± 3) minutes. No further mixing, or aeration shall occur during this time.

F. Compaction
Compact specimens in a Superpave gyratory compactor (SGC) at a vertical pressure of 600 kPa, an angle of 1.25°, and a mold of 150 mm diameter for 30 gyrations for emulsions and 60 gyrations for foamed asphalt. After the last gyration, 600 kPa pressure shall be applied for 10 seconds. The mold shall not be heated.

G. Short-Term Strength (STS) Test
A modified Hveem cohesiometer apparatus shall be used to test the early strength (1 hour). This apparatus and procedure generally conforms to ASTM D 1560 Section 10 with the following exceptions:

- It shall have the capacity of testing 150 mm specimens

- It shall be cured before compaction according to Section 5, and cure each specimen at each emulsion content for 60 ± 5 minutes at 25°C and 10 to 70 percent humidity after compaction and before testing.

Ensure that the following calibrations have been made:

1. The counter balance should be positioned exactly so that the hinged plate just barely remains horizontal when the top brackets and empty bucket are in place. This ensures that there is no force on the sample until shot begins to flow into the bucket.

2. The gap between the bars of the switch that turns off the flow of shot should have a gap of ¾ inch when there is 3000 g of shot in the bucket. During this adjustment the locking bolt that prevent the plate from moving is in place.

Cohesionometer Test Procedure
1. Tare the scale with the empty bucket weight.

2. Center the specimen on the unit

3. Place plates on top of sample and press down while adjusting the outer lower nuts up until they just contact the bottom of the plate.

4. Use a torque wrench or torque-meter to tighten the nuts on the specimen to 20 inch-pounds (maximum).

5. Gently support the bar so the unit does not move when the pic is pulled releasing the hinged plate.

6. Pull pin and push open valve to start the flow of shot.

7. After the unit shuts off the flow of shot, immediately put the locking pin in place and then record the weight of slot.

8. Loosen top nuts to remove plates and rotate specimen 90°.

9. Repeat procedure on the other axis of the specimen.

10. Calculate short-term strength as follows:
    Shot weight / (15 * (0.031*height + 0.0027*height2))

11. A total of two results will be obtained for each specimen at each emulsion content, and a total of four results will be obtained at each emulsion content.

H. Curing after Compaction

Specimens (except STS specimens) shall be cured for 72 hours at 40°C. The bottom of the specimens shall rest on racks with slots or holes for air circulation. After curing, specimens for moisture conditioning shall be cooled at ambient temperature or 25°C and be tested at the same time as moisture-conditioned specimens. Specimens for maximum specific gravity shall be cured at the same conditions as the compacted specimens, except they can be tested after cooling a maximum of 24 hours.

I. Volumetric Measurements

Perform bulk specific gravity of the specimens according to ASTM D 6752. Keep specimens in bags until testing or vacuum saturation is performed. ASTM D 2726 (one minute soak) can be performed if absorption is less than 2 percent.

Perform maximum specific gravity measurements according to ASTM D 2041 with the supplemental dry-back procedure. Determine maximum specific gravity at the other emulsion contents, corrected for the residue of emulsion. Determine air voids at each emulsion content.

J. Mechanical Measurements

Perform resilient modulus testing in accordance with ASTM D 4123 on at least two specimens at each emulsion content after conditioning for at least two hours at 25°C. Test at a frequency

of 1 Hz and use a Poisson's ratio of 0.30 to 0.40 for analysis. This can be performed before the ITS test on the same (dry) specimens. Perform strength testing according to ASTM D 4867. Specimens shall be conditioned at 25°C. for two hours before testing. Vacuum saturate half the specimens at each emulsion content to a minimum 55 percent of the voids filled with water. Soak for 24 hours at 25°C before testing.

K. Thermal Cracking

Specification temperatures shall be chosen using FHWA LTTPBind Software (Version 2.1) using the weather station closest to the project. The required temperature for the specification is the coldest temperature at the top of the FDR / GBS layer in the pavement structure. Use 98 percent reliability.

Perform the indirect tensile testing (IDT) according to AASHTO T-322 with the following exceptions:

1. Specimens shall be 150 mm in diameter and at least 115 mm in height and cures and compacted as described in the testing procedures. After curing, two specimens shall be cut from each compacted specimen to 50 mm in height. Perform bulk specific gravity after curing.

2. Two to three specimens are required at each of three temperatures

3. Select two temperatures at 10°C intervals that bracket the required specification. For example, if the required specification temperature is -25°C, then select testing temperatures of -20°C and -30°C. A temperature of -10°C, or -40°C should then be selected to complete the third required temperature.

4. The tensile strength test shall be carried out on each specimen directly after the tensile creep test at the same temperature as the creep test.

5. The environmental chamber must be capable of temperatures down to -40°C.

6. The critical cracking temperature is defined as the intersection of the calculated pavement thermal stress curve (derived from creep data) and the tensile strength line (the line connecting the results of the average tensile strength at the two temperatures).

L. Emulsion Content Selection

The emulsion content selected shall result in the mixture meeting the following requirements (Table 14):

5-692.200- Table 14. Requirements for SFDR Mix Design

Test Property	**Criteria**
Superpave Gyratory Compaction, 1.25° angle, 600 kPa, gyrations	30
Short-term strength test, 1 hour – modified cohesiometer, ASTM D 1560-92 (Part 13), g/25mm of width (see "G. Short-Term Strength (STS) Test")	175 min.
Indirect Strength Test (ITS), ASTM D 4867, part 8.11.1, 25°C, psi	40 min
Conditioned ITS, ASTM D 4867 (See Note 1), psi	25 min.
Resilient Modulus, ASTM D 4123, 25°C, psi * 100	150 min.
Thermal Cracking (IDT), AASHTO T0322 (Based on LTPPBind for Climate)*	See Note

*Optional if project is in -20°C, or warmer climate

5-692.291. CIR Mix Design Procedure

Perform the mix design on these crushed millings. Use ASTM C117 and C136 (dried at no greater than 40°C [104°F]) to determine the gradation of the crushed millings. The mix design must meet the requirements of the Table 15:

5-692.200- Table 15. Requirements for CIR Mix Design

Property	**Criteria**	**Purpose**
Compaction effort, Superpave Gyratory Compactor, 1.16° internal angle, 600 kPa stress, gyrations	30 gyrations	Density Indicator
Density, ASTM D 2726 or equivalent	Report	Compaction Indicator
Gradation for Design Millings, ASTM C117	Report	--
Marshall stability*, ASTM D 1559 Part 5, 40°C	1,250 lb min.	Stability Indicator
Retained stability based on cured stability **	70 % min.	Ability to withstand moisture damage
Indirect Tensile Test, AASHTO TP9-96, Modified	See Procedure	Thermal Cracking
Raveling Test, Method Attached, Ambient, Modified	2% max.	Raveling Resistance

Prepare samples with a sample splitter, otherwise dry, screen and recombine millings to the target gradation. Suggested screens include: 1/2 inch [12.5 mm], 3/8 inch [9.5 mm], No. 4 [4.75 mm], No. 8 [2.36 mm], No. 30 [600 µm], and pan. Scalp oversize with a 1.0 inch [25.0 mm] screen when using 3.94 inch [100 mm] diameter compaction molds.

Mixing: Use enough material to prepare specimens 61.0 to 66.0 mm [2.4 to 2.6 inch] tall. Use ASTM D2041 to determine the size for Rice specific gravity.

Number of specimens: Four (4) per emulsion content for a total of six (6) for long-term stability and six (6) for moisture testing for three (3) emulsion contents. Two (2) specimens are required for Rice specific gravity; test at the highest emulsion content in the design and back calculate for the lower emulsion contents.

Recommended emulsion contents: 1.5%, 2.0%, 2.5%, 3.0%, 3.5%, 4.0%. Choose three emulsion contents that bracket the estimated recommended emulsion content.

Add moisture that is expected to be added at the milling head, typically 1.5 to 2.5 percent.

If any additives are in the mixture, introduce the additives in a similar manner that they will be added during field production.

Mixing of test specimens shall be performed with a mechanical bucket mixer. Mix the CIR RAP millings thoroughly with water first, then mix with emulsion. Mixing shall occur at ambient temperature. One specimen shall be mixed at a time. Mixing time with emulsion should not exceed 60 seconds.

Compaction: Specimens shall be compacted immediately after mixing. Place paper disks on the top and bottom of the specimen before compaction.

Compact specimens with a Superpave gyratory compactor (SGC) in a 100 mm mold at 1.25° angle, 600 kPa ram pressure, and 30 gyrations. Do not heat the mold.

Curing after compaction: Extrude specimens from molds immediately after compaction. Carefully remove paper disks.

Place specimens in 140°F [60°C] forced draft oven with ventilation on sides and top. Place each specimen in a small container to account for material loss from the specimens.

Dry specimens for Rice specific gravity to constant weight (less than 0.05% weight loss in 2 hours). Take care not to over-dry the specimens.

Cure compacted specimens to constant weight but no more than 48 hours and no less than 16 hours. Constant weight is defined here as 0.05% change in weight in 2 hours. After curing, cool specimens at ambient temperature a minimum of 12 hours and a maximum of 24 hours.

Measurements: Determine bulk specific gravity (density) of each compacted (cured and cooled) specimen according to ASTM D2726; however, record the mass of the specimen in water (measurement C) after one minute submersion.

Determine specimen heights according to ASTM D3549, or from the SGC readout.

Determine Rice (maximum theoretical) specific gravity, ASTM D2041, except as noted in Item 4 of this procedure, and do not break any agglomerates which will not easily reduce with a flexible spatula. It is normally necessary to perform the supplemental dry-back procedure to adjust for uncoated particles.

Determine air voids at each emulsion content.

Determine corrected Marshall stability by ASTM D1559 at 40°C [104°F] after 2 hour temperature conditioning in a forced draft oven. Perform this testing at the same time as the moisture conditioned specimens are tested.

Moisture Susceptibility: Perform same conditioning and volumetric measurements on moisture-conditioned specimens as on other specimens. Vacuum saturate to 55 to 75 percent, soak in a 77°F [25°C] water bath for 23 hours, followed by a one hour soak at 104°F [40°C].

Determine corrected Marshall stability. The average moisture conditioned specimen strength divided by the average dry specimen strength is referred to as retained stability.

Thermal Cracking
Emulsion Content Selection: Select the minimum emulsion content that satisfies the requirements of Table 14.

Report: Report the following information: Gradation of RAP; amount and gradation of virgin aggregate or additional RAP, if any; recommended water content range as a percentage of dry RAP; optimum emulsion content as a percentage of dry RAP and corresponding density, air void level, and absorbed water; Marshall stability and retained stability at recommended moisture and emulsion contents, Raveling %, and Thermal Cracking initiation temperature. Include the emulsion designation, company name, plant location, and residue content.
Procedures for performing AASHTO TP9-96 for CIR Design Specimens
NOTE: Procedure for critical cold temperature selection

Choose specification temperature using FHWA LTPPBind software (Version 2.1) and the weather station closest to the Project. The required temperature for the specification is the coldest temperature at the top of the CIR layer in the pavement structure. Use 98 percent reliability.

Indirect tensile testing (IDT) Procedure:
Perform testing in accordance to AASHTO TP9-96 with the following exceptions:

1. Specimens using the medium gradation shall be 150 mm [6 inches] in diameter and at least 115 mm [4.5 inches] in height and compacted to air voids +/- 1 percent of design air voids at the design emulsion content. A trial specimen is suggested for this. Test specimens shall be cured at 60ºC [140°F] no less than 48 hours and no more than 72 hours. Check specimen mass every 2 hours after 48-hour cure to check with compliance of no more than 0.05% change in mass in 2 hours. After curing, two specimens shall be cut from each compacted specimen to 50 mm [2 inches] in height. Perform bulk specific gravity after cutting.

2. Instead of three specimens, two specimens are the minimum required at each of three temperatures.

3. Select two temperatures at 18°F [10ºC] intervals that bracket the required specification. For example, if the required specification temperature is 13°F [–25ºC], then select testing temperatures of 4°F [–20ºC] and 22°F [–30ºC]. A temperature of 14°F [–10ºC] or 40°F [–40ºC] should then be selected to complete the third required temperature.

4. Perform the tensile strength test on each specimen directly after and at the same temperature as the tensile creep test.

5. The environmental chamber must be capable of temperatures down to –40ºF [40°C].

6. The critical cracking temperature is defined as the intersection of the calculated pavement thermal stress curve (derived from the creep data) and the tensile strength line (the line connecting the results of the average tensile strength at the two temperatures).

Raveling Test Procedure on Recycled Asphalt Specimens

The apparatus used for the raveling test is a modified A-120 Hobart mixer and abrasion head (including hose) used in the Wet Track Abrasion of Slurry Surfaces Test (ISSA TB-100). The rotation speed for the raveling test is not modified from ISSA TB-100. The ring weight is removed from the abrasion head for the raveling test below. The weight of the abrasion head and hose in contact with the specimen should be 21.2 +/- 0.5 ounces [600 +/- 15g]. The prepared sample must be able to be secured under the abrasion head, and centered for accurate result, allowing for free movement vertically of the abrasion head. The device used for securing and centering the sample must allow a minimum of 0.4 inch [10 mm] of the sample to be available for abrasion. The Hobart mixer will need to be modified to allow the sample to fit properly for abrasion. The modification may be accomplished by adjusting the abrasion head height, or the height of the secured sample. A Raveling Test Adapter can be purchased through Precision Machine and Welding, Salina, KS, 1-877-876-9537. Please reference the Hobart Model number A-120 when ordering. The C-100 and N-50 Models are not acceptable for this test procedure due to differences in size and speed of rotation.

1. Split out two recycled asphalt samples from the medium gradation, or field sample, to a quantity of 6 pounds [2700 g] in weight [mass]. The 6 pounds [2700 g] is an approximate weight to give 2.8 +/- 0.2 inches [70 +/- 5 mm] of height after compaction.

2. Place the recycled asphalt sample in an adequately sized container for mixing.

3. Add field or design moisture contents to each of the samples and mix for 60 seconds.

4. Add the design emulsion content to each of the samples and mix for 60 seconds.

5. Immediately place the samples into a 6 inch [150 mm] gyratory compaction mold and compact to 20 gyrations. If the sample height is not 2.8 +/- 0.2 inches [70 +/- 5 mm], adjust the recycled asphalt weight.

6. After compaction, remove the samples from the compaction mold and place on a flat pan to cure at ambient lab temperature (65 – 75ºF [18-24ºC]) for 4 hours +/- 5 minutes.

7. Weigh the specimen after curing, and just prior to testing.

8. Place the specimens on the raveling test apparatus. Take care that the specimen is centered and well supported. The area of the hose in contact with the specimen should not have been previously used. It is allowable to rotate the hose to an unworn section for testing. The abrasion head (with hose) shall be free to move vertically downward a minimum of 5 mm [0.2 inches] if abrasion allows.

9. Abrade the samples for 15 minutes and immediately weigh them.

10. Determine the % Raveling loss as follows: ((Wt. Prior to test – Wt. After abrasion)/Wt. Prior to test) * 100.

11. Report the average of the two specimens as the % Raveling loss. There should not be a difference of 0.5% Raveling Loss between the two test specimens for proper precision. A difference of >0.5 percent will require the test to be repeated. If both of the samples have a Raveling Loss of >10% the numbers shall be averaged and the precision rule will be waived.

Note: Omit Steps 2, 3 and 4, if field mix samples are taken.

5-692.300- Reports

5-692.301. Grading and Base Reports 114
5-692.315. Materials Certification 115
5-692.316. Requirements for Certification 117

5-692.301. Grading and Base Reports

A. The Preliminary and Final Grading and Base Report (Form G&B-001, Figure 27) is used by the Project Engineer and Contractor to report information needed by the Grading and Base Construction Engineer.

G&B-001 (7/20/2012)

GRADING AND BASE REPORT
Grading & Base Manual 5-692.301

Report: Preliminary ☐
Final ☐

Project No:	T.H.:	Project Inspector:	Date:
0280-172	35	Mareen Corr	3/5/2010
Project Engineer:	**Contractor:**	**Projected Start Date:**	**Completion Date:**
D. Grebeb	Full Cooperation, Inc.	4/30/2010	8/25/2010

Date of Schedule of Materials Control: 3-Apr-12

EXCAVATION & AGGREGATE CLASS	QUANTITY	m^3, yd^3, tons, t, m^2, yd^2	COMPACTION TESTS				MOISTURE TESTS			GRADATION TESTS		
			Mod Penetration Index, Specified Density, Quality Compaction, etc.	MINIMUM TEST RATE	# TESTS REQUIRED	# TESTS COMPLETED	MINIMUM TEST RATE	# TESTS REQUIRED	# TESTS COMPLETED	MINIMUM TEST RATE	# TESTS REQUIRED	# TESTS COMPLETED
Common Exc.	1,256,700	yd^3	Specified Density	1/4,000	315		1/10,000	126		n/a		
Subgrade Exc.	256,940	yd^3	Specified Density	1/4,000	65		1/10,000	26		n/a		
Class 1	1,056	yd^3	Quality Compactiono	n/a	n/a	n/a						
Class 5	30,729	yd^2	Penetration Index	1 / 500	62		1/1,000 or 10	10		6 lots (4 sub-lots)	24	

Remarks: An additional 35,000 yd3 of Subgrade Exc. was unsuitable and wasted in borrow pit.

Uncorrected Tests shall be listed and adressed in the Materials Certification Exceptions Form.

CC: Grading and Base Office, District Materials Engineer, and Project Engineer/Supervisor

5-692.300-Figure 27. Grading and Base Report Example (Form G&B-001)

Fill out the preliminary Grading and Base Report within two weeks of project start-up. Send a copy of this report to the Grading and Base Unit.

Fill out the final Grading and Base Report after all grading and base materials have been placed. Send a copy of this report to the Grading and Base Unit.

B. Use the following guidelines when preparing the report.

1. Use the lowest S.P. Number.

2. Fill out form completely. In the first column insert the item name.

3. Insert the minimum testing rate for the class of material. This information is contained in the Schedule of Materials Control (SMC). .

4. Under each of the test designations there are two columns headed "Required" and "Completed".
   a. "Required." In this column, enter the number of tests required for the quantity of material listed.

   For projects with pay items for aggregate in cubic meters or cubic yards, the conversions from metric tons and English tons are as follows:

   1 metric ton = 0.6 cubic meter (1 ton = 0.7 cubic yard) (LV)
   1 metric ton = 0.46 cubic meter (1 ton = 0.55 cubic yard) (LV)

   b. In the column headed "Completed," enter the number of tests completed.

5. Remarks: Use the "Remarks" area to communicate any deviations from the requied tests.

5-692.315. Materials Certification

A. The Materials Certification Exception Summary (TP 02171, Figure 28) is used to certify that all grading and base materials incorporated into the project have been inspected, tested and accepted. This document assures conformance with the approved plans, specifications, special provisions and the Schedule of Materials Control. All nonconforming items (exceptions) must have a documented resolution. Missing tests and reports, uncorrected failing tests, lab/field tolerance failures and tests performed by non-certified personnel are considered exceptions.

   This form (Figure 28) is required for Final Certification and must be completed before the Final Estimate is completed and printed.

   ** The most current version of this form is available from the Office of Construction website: http://www.dot.state.mn.us/const/tools/forms.html

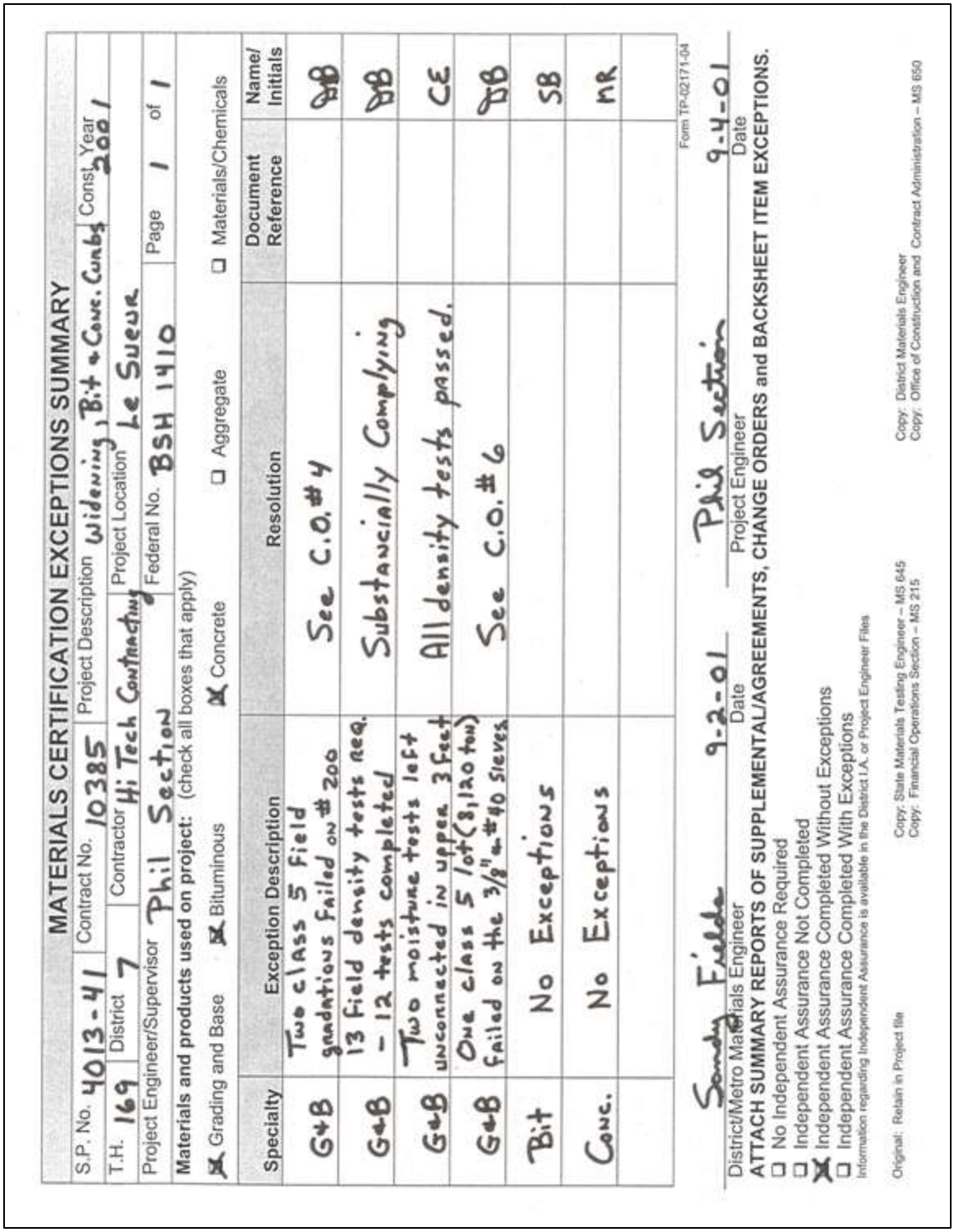

MATERIALS CERTIFICATION EXCEPTIONS SUMMARY

S.P. No. 4013-41 | Contract No. 10385 | Project Description widening, Bit + Conc. Curbs | Const. Year 2001

T.H. 169 | District 7 | Contractor Hi Tech Contracting | Project Location Le Sueur

Project Engineer/Supervisor Phil Section | Federal No. BSH 1410 | Page 1 of 1

Materials and products used on project: (check all boxes that apply)

☒ Grading and Base ☒ Bituminous ☒ Concrete ☐ Aggregate ☐ Materials/Chemicals

Specialty	Exception Description	Resolution	Document Reference	Name/ Initials
G+B	Two class 5 field gradations failed on #200	See C.O. #4		DB
G+B	13 field density tests req. - 12 tests completed	Substancially Complying		DB
G+B	Two moisture tests left unconnected in upper 3 feet	All density tests passed.		CE
G+B	One class 5 lot (8,120 ton) failed on the 3/8" + #40 sieves	See C.O. #6		DB
Bit	No Exceptions			SB
Conc.	No Exceptions			MR

Sandy Fields 9-2-01 Phil Section 9-4-01

District/Metro Materials Engineer Date Project Engineer Date

ATTACH SUMMARY REPORTS OF SUPPLEMENTAL/AGREEMENTS, CHANGE ORDERS and BACKSHEET ITEM EXCEPTIONS.

☐ No Independent Assurance Required

☐ Independent Assurance Not Completed

☒ Independent Assurance Completed Without Exceptions

☐ Independent Assurance Completed With Exceptions

Information regarding Independent Assurance is available in the District I.A. or Project Engineer Files

Original: Retain in Project file

Copy: State Materials Testing Engineer – MS 645
Copy: Financial Operations Section – MS 215

Copy: District Materials Engineer
Copy: Office of Construction and Contract Administration – MS 650

Form TP-02171-04

5-692.300-Figure 28. Materials Certification Exception Example

B. Use the following guidelines, when preparing the Materials Certification form.

1. Place an "X" by Grading and Base.

2. Use the lowest SP number, Contract No. and Project Description.
3. Fill in the Trunk Highway or CSAH number.

4. Enter the MnDOT District or the County's or City's name.

5. Enter the location of the project.

6. Enter the Contractor and Project Engineer/Supervisor's name.

7. Review all Grading and Base items for:
   a. Quantities used
   b. Change Orders and Supplemental Agreements
   c. The number of tests required and performed
   d. Resolution of failing test results
   e. Resolution of out-of-tolerance field/laboratory companion tests

8. Enter all exceptions. See section, "5-692.316. Requirements for Certification".

9. Enter the Federal No.

10. District/Metro Materials Engineer must sign form.

11. Resident or Project Engineer must sign form.

C. Certification Audit

Approximately 15-30 project certifications may be audited every year. The projects are picked at random, although there is an effort to get at least one project audited from each resident office in every district.

If a project is chosen to be audited, the resident engineer will receive a request for all project materials inspection and testing records to be sent to the Audit Manager at the Maplewood Laboratory. The records will be due in Maplewood within two weeks of the request. The project files will be reviewed by the appropriate Specialist Units (Grading and Base, Bituminous or Concrete). After the audit has been completed, the resident engineer is encouraged to respond to the audit at that time with any questions or give further statements to correct any discrepancies or misunderstandings about the final audit results.

5-692.316. Requirements for Certification

A. Possible tests/samples required for any project as per current Schedule of Materials Control. (Field and/or Laboratory)

1. Proctor tests

2. Moisture tests

3. Density tests

4. DCP tests

5. Gradation tests

6. Crushing tests

7. Quality tests

8. Bituminous extraction for aggregate with salvaged bituminous

B. Laboratory and field tests

1. Copies of all laboratory test results/reports on file. (Reports must contain field companion results.)

2. Copies of all field test results on file.

C. Independent Assurance requirements of file

1. Certification of project personnel

2. Required I.A. inspections - (gradations and/or densities)

D. Other required forms on file

1. Current certification form

2. Grading and Base Reports, form G&B-001.

3. Aggregate Certification, form G&B-104

4. Glass certification letters

5-692.400- Field Inspection of Materials

5-692.401 Culvert Inspection and Installation 120
5-692.430 Grading and Base Conversion Factors (English) 123
A. Scope 123
B. Conversion Calculation 123
C. Gravel Base Conversion Calculations 123

5-692.401 Culvert Inspection and Installation

The final inspection and acceptance of culvert pipe is made on the projects. A preliminary inspection is also made at the producing plant by a representative of the Office of Materials. The culvert should be rejected if the field inspection reveals it to be defective.

A. Concrete Pipe

The plant inspection of concrete pipe includes the sampling and testing of the materials used in the manufacture of the pipe and a 3 edge bearing test. In lieu of the bearing test, cores are sometimes drilled from the pipe and tested in the laboratory.

The finished product is also inspected at the plant. Because the pipe are stockpiled at the plant, it is not always possible to make a close inspection of each length of pipe. For this reason and because of the possibility of damage in shipping or handling, the pipe should be visually inspected on the project before it is installed. Visual inspection should include the following items:

1. Fractures and cracks that extended all the way through the wall of the pipe: Fractures in the tongue or groove ends are not cause for rejection, provided that they can be satisfactorily repaired.

2. Honeycombing: Excessive honeycomb can reduce the strength of the pipe.

3. Steel obviously misplaced: This would include exposed steel and wire projecting from the end of the barrel. (The exposure of the ends of stirrups or spacers that have been used to position the reinforcing steel during placement of the concrete shall not be considered cause for rejection.)

4. It is not necessary to measure every pipe. Each lot delivered should be spot checked for compliance.

5. Check each pipe for the class, date and trademark.

B. Metal Pipes

The plant inspection of metal pipes includes the periodic sampling and testing of the materials used in the manufacture of the pipes.

Pipes are visually inspected at the plant but should be inspected again in the field before being installed. Pipes should be inspected for the following defects:

1. Major Defects
   a. Uneven laps
   b. Variation from straight center line
   c. Variation from design shape
   d. Lack of rigidity
   e. Illegible brand
   f. Bruised, scaled or broken spelter coating
   g. Dents or bends that will affect the use or function of the pipe

2. Minor Defects
   a. Ragged or diagonal edges
   b. Loose or unevenly spaced rivets
   c. Poorly formed rivet heads
   d. Unfinished ends
   e. Dents or bends in the material that will not affect the use or function of the pipe

In general, a pipe is not rejected unless there is a major defect or five or more minor defects.

C. Culvert Installation

The foundation for the pipe should be constructed in such a manner that it will provide uniform bearing for the full length of the pipe. In order to accomplish this, the specifications provide for shaping the natural ground or bedding to fit the lower portion of the pipe, usually 15% of the outside diameter of the pipe. This should be checked with a template.

In cases where the pipe is placed in plastic soil and the pipe is within the frost penetration zone, treatments are provided to prevent heaving. The type of treatment, length of tapers, etc. will be shown in the typical sections.

It is the inspector's responsibility of the inspector to verify that treatments are properly staked and that tapers are properly constructed to the plan dimensions.

Note: Any changes (even seemingly minor alterations) to the design dimensions should be made only after consulting the Project Engineer and the District Soils Engineer.

Compaction of the embankment adjacent to the pipe shall be in accordance with 2105.3E or 2106.3E.

The inspector should familiarize himself with the requirements of 2501 of the specifications for the installation of pipe culverts and closely inspect the work to determine compliance with the specifications (Figure 29 and Figure 30).

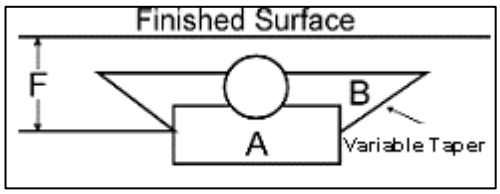

5-692.400- Figure 29. Culvert Installation

A = Class 5 bedding (Aggregate Bedding): Required Tests: moisture, density, gradation
B = Granular backfill: Required Tests: moisture, density, gradation
F =Average depth of frost penetration (furnished by District Soils Engineer)

Note: It is not necessary to make a gradation test of bedding or granular material for each installation. Tests should be made at the prescribed rate for each class of material. Moisture and density tests do not have to be made for each layer placed. Take only as many tests as are necessary and practical to document the work. Backfill (B) shall be placed in approximately equal layers simultaneously on both sides of the pipe (Figure 30).

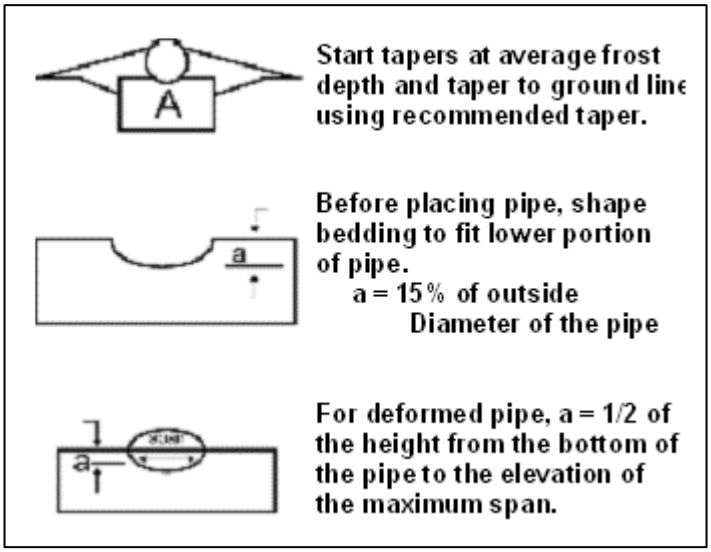

5-692.400- Figure 30. Culvert Installation (Deformed Pipe)

When the flow line of the pipe is at natural ground line, and the pipe is installed ahead of embankment construction, tapers of the granular backfill may be reversed as shown above.
Note: Check with template.

The required density for bedding, backfill and embankment to the top of the pipe is 100% relative density.

5-692.430 Grading and Base Conversion Factors (English)

A. Scope

The purpose of this section is to acquaint the inspector with the basic materials measurement conversions used in grading and base construction work. This section will also provide the method for calculating these conversions. A table of conversions is shown at the end of this section.

Note: for metric version of this section, see "MnDOT Grading and Base Manual, ver. 2002".

B. Conversion Calculation

Conversions have been established for both the Grading and Base items. The Grading conversions are measurement of materials in cubic yards at the borrow source (Bank Measure), in the hauling unit (Loose Volume) and the material placed in the embankment (Compacted or Placed Volume). The base conversions are generally tons, cubic yards (yd3) (Loose Volume - LV) and cubic yards placed (Compacted Volume - CV).

The standard gravel base conversions are calculated on the proctor density of 135 pounds per cubic foot. This proctor was chosen as it best represents the statewide average. Variations for lighter or heavier materials can be calculated on the basis of their proctors. However, this is only done when there will be significant quantities involved. The Grading and Base Office should be contacted when the non-standard conversion is going to be used.

Note: When making any conversions for the purposes of measuring pay quantities, a Change Order must be prepared.

C. Gravel Base Conversion Calculations

1. Tons to Cubic Yards Loose Volume. (This conversion uses the standard weight of sand Loose Volume which is 105 pounds per cubic foot).

   Formula

   $$1\,yd^3\,(LV) = \frac{105\,lbs}{ft^3} \times \frac{27\ ft^3}{yd^3} \times \frac{tons}{2{,}000\,lbs} = \frac{105 \times 27}{2{,}000} = \frac{2{,}835}{2{,}000} = 1.4\,tons$$

   Therefore: 1 yd^3 (LV) = 1.4 tons

2. Tons to Cubic Yards Compacted Volume. (This conversion uses the average proctor for base material of 135 pounds per cubic foot.)

   Formula:

   $$1\,yd^3\,(CV) = \frac{135\,lbs}{ft^3} \times \frac{27\ ft^3}{yd^3} \times \frac{1\,ton}{2{,}000\,lbs} = \frac{135 \times 27 \times 1}{2{,}000} = \frac{3{,}645}{2{,}000} = 1.8\,tons$$

   Therefore: 1 yd^3 (CV) = 1.8 tons

3. Cubic Yards Compacted Volume to Cubic Yards Loose Volume. (Using the two relations developed in "1" and "2" of this section.)

1 yd^3 (LV) = 1.4 tons
1 yd^3 (CV) = 1.8 tons

$$\frac{1\,yd^3\,(CV)}{1\,yd^3\,(LV)} = \frac{1.8\,tons}{1.4\,tons} = 1.285 = 1.3$$

Therefore: 1 yd^3 (CV) = 1.3 yd^3 (LV)

D. Grading Conversion Calculations

1. Cubic Yards Loose Volume to Cubic Yards Compacted Volume.

   In grading we have retained the same relationship between Loose Volume (LV) and Compacted Volume (CV) as calculated for base materials.

   Therefore: 1 yd^3 (CV) = 1.3 yd^3 (LV).

2. Cubic Yards Bank Measure to Cubic Yards Compacted Volume.

   The Bank Measure refers to material in the borrow pit in its natural state of compaction. For general application we have assigned material in the natural compaction state a relative density of 90% of proctor density.

   Formula

   1 Cubic Yards (Bank Measure) = 90% x 1 Cubic Yard (CV)

   $$\frac{1\,yd^3\,(BM)}{0.90} = 1\,yd^3\,(CV)$$

   $$\frac{1\,yd^3\,(BM)}{0.90} = \frac{1}{0.9} = 1.1\,yd^3\,(BM) = 1\,yd^3\,(CV)$$

   Therefore: 1 yd^3 (CV) = 1.1 yd^3 (Bank Measure)

3. Cubic Yards Bank Measure to Cubic Yards Loose Volume.

   Relationships established in “1” and “2” of this section are used to make this conversion.

   (1) 1 yd^3 (CV) = 1.3 yd^3 (LV)
   (2) 1 yd^3 (CV) = 1.1 yd^3 (BM)

   Therefore: 1.1 yd^3 (BM) = 1.3 yd^3 (LV)

Therefore: 1 Cubic Yard (BM) = 1.2 Cubic Yards (LV)

Note: The grading conversions from Bank Measure to Compacted Volume and Loose Volume are based on the 90% relative density assumption for material in natural state of compaction. Calculations involving materials at a significant depth in the borrow area i.e. material with a thick layer of material in-place above it, should be made based on field test results. The Grading and Base Unit should be contacted for assistance in making these determinations.

Conversion Tables:

A. Base Materials

1 ton = 0.714 yd^3 (LV)
1 ton = 0.55 yd^3 (CV)

1 yd^3 (LV) = 1.4 ton
1 yd^3 (LV) = 0.77 yd^3 (CV)

1 yd^3 (CV) = 1.8 ton
1 yd^3 (CV) = 1.3 yd^3 (LV)

B. Grading

1 yd^3 (CV) = 1.3 yd^3 (LV)
1 yd^3 (CV) = 1.1 yd^3 (BM)

1 yd^3 (LV) = 0.83 yd^3 (BM)
1 yd^3 (LV) = 0.77 yd^3 (CV)

1 yd^3 (BM) = 0.90 yd^3 (CV)
1 yd^3 (BM) = 1.2 yd^3 (LV)

C. Rip Rap and other predominately one sized products

1.35 Tons per Cubic Yard (CV)

5-692.500- Treatment & Stabilization of Soils/Bases

5-692.515. Use of Calcium Chloride For Dust Control 127
5-692.521. Use of Lime to Dry Soil 127

5-692.515. Use of Calcium Chloride For Dust Control

Calcium chloride (3911) is frequently used for dust control. It is used on roads under construction, on haul roads used during construction or on unsurfaced roads where heavy dust is a nuisance or a pollution problem. It "lays dust".

The calcium chloride is a deliquescent material, holding moisture from evaporation and so changing the roads' surface from wind-blown swirling materials to moistened and stable riding surface.

Calcium Chloride ($CaC1_2$) can be applied either in a solid or liquid form. The liquid calcium chloride shall contain a minimum of 38 percent, by mass (weight), anhydrous CaC12. Andydrous $CaC1_2$ is produced by mixing water and a given amount of solid $CaC1_2$.
The solid $CaC1_2$ comes in two types:

- Type I - Flake = 77% $CaC1_2$
- Type II - Pellet = 94% $CaC1_2$

Table 16 provides approximate application rates for both solid types and liquid type of $CaCl_2$.

5-692.200-Table 16. Application Rates for Dust Control

	Type I lbs/yd^2 (kg/m^2)	Type II lbs/yd^2 (kg/m^2)	(*) 38% Solution gal/yd^2 (l/m^2)
Initial Use	1.0 (0.5)	0.8 (0.4)	0.2 (1.0)
Additional Use	0.5 (0.25)	0.4 (0.2)	0.1 (0.5)

(*) add 5.6 lbs/gallon (0.6 kg/liter) of Type I for a 38% solution.
add 4.7 lbs/gallon (0.5 kg/liter) of Type II for a 38% solution.
Note: a 38% solution gallon (liter) will weigh approximately 11.6 lbs. (1.3 kg)

5-692.521. Use of Lime to Dry Soil

Under certain conditions, drying of fine grained soils by treating them with lime is more economical than by scarifying and aerating by mechanical methods. Lime reacts with clay particles in the soil to produce decreased plasticity, improved work ability, and increased strength and stability. This process works best when the soils are reactive. Soils with a minimum clay content (.002 mm) of approximately ten percent and a plasticity Index greater than ten respond most favorable. Soils with over two percent organic matter will probably show very little increase in strength.

There are two lime products which may be used:

1. Quicklime is calcined calcium carbonate or calcium oxide (CaO). It is highly reactive, especially when mixed with water.

2. Hydrated lime is quick lime that has had part of its water demand satisfied by adding water in the slaking process until it is essentially calcium hydroxide (Ca(OH)2).

Of the two, hydrated lime is the most desirable. The amount of lime required depends on the soil type and moisture content. In most cases, less than 1% hydrated lime is sufficient if it is

properly spread and mixed with the soil. In no case should more than 2% lime be used. As a rule of thumb, for most soils and for a 6 inch (150 mm) layer, one percent lime corresponds to about 5 lbs/yd^2 (2.7 kg/m^2). Quicklime may be substituted for hydrated lime on the basis of 0.77% quicklime being equal to 1.0% hydrated lime. However, because of the hazards involved, more stringent safety precautions will be necessary if the use of quicklime is approved. Recommendations of the Industry on safety rules and first aid procedures should be followed. This includes the use of special clothing, protective cream, and eyes, mouth and nose protection. Hot, humid weather tends to increase the effect of lime on the worker's skin.

The contractor may request using lime at their expense. Lime is not permitted without the approval of the project engineer. A change order stating the application rate and other conditions should be prepared.

There may be times when the Department wishes to use hydrated lime. The District Soils or Materials Engineer should be consulted in making decisions on the use of lime. Lime should be used only after it is demonstrated that the soil cannot be dried by conventional methods due to excessive moisture and poor drying weather. A supplemental agreement will have to be prepared, with the concurrence of the Assistant District Engineer, to pay for the lime and work involved in accordance with the provisions of the specification pertaining to extra work. In negotiating the supplemental agreement, it should be realized that the cost of placing and compacting the soil is already included in the bid price for excavation. The cost of the lime, spreading and mixing are extra. However, the use of lime should reduce the work normally required to dry the soil.

The construction involves scarification, lime spreading, mixing and compaction. Scarifying before spreading the lime helps to prevent loss due to wind and rain, particularly if mixing is not started immediately. Application of lime should be full width across the grade. Lime should not be spread under windy conditions because of excessive dusting. To prevent wind loss, the lime shall be mixed into the soil immediately after spreading. Self unloading bulk tanker trucks are most efficient for transporting and spreading lime, since re-handling is not necessary. Tailgate spreading should not be allowed. Thorough mixing is essential to distribute the lime uniformly throughout the soil to proper depth and width Disc harrows may be adequate for mixing, although rotary mixers are preferred for heavier soils. After satisfactory moisture and soil conditions are attained, the material can be compacted as specified. Sheepsfoot rollers should be used for initial compaction. Final rolling with a pneumatic roller will help to seal the subgrade and cause it to shed rain water, thereby eliminating construction delays.

When lime is used as a drying aid, it will be necessary to establish a new moisture density relationship for the soil plus the lime. The optimum moisture should be slightly higher and the maximum density should be slightly lower than for the soil without lime.

5-692.600- Soil Classification Introduction

5-692.600. Soil Classification Introduction 130
5-692.601. Soil Identification 130
5-692.602. Pedological Classification 130
5-692.603. Primary Classifier (Texture) 131
5-692.604. Secondary Classifiers 142
5-692.605. Organic Soils 144
5-692.606. AASHTO Classification 145
A. GENERAL 145
B. SCOPE 145
C. TEST PROCEDURES 146
5-692.607. Soil Selection Guide for Field Inspectors 152
5-692.620. Soil Profile 156
5-692.621. Definition (Soil Profile) 156
5-692.622. Development of Soil Profile 157
5-692.623. Prairie Soils 158
5-692.624. Forest Soils 158
5-692.625. Types of Surficial Geological Deposits in Minnesota 158
5-692.630. Soil Selection 164

5-692.600. Soil Classification Introduction

In present day soil engineering practice as applied to various fields of engineering such as highways, airports, dams, foundations, and the like, there are several different methods of soil classification in use. Most of them attempt to classify soils into groups on the basis of their engineering properties; that is, the manner in which they will perform as part of an engineering structure under a given set of conditions. The purpose of this is largely to aid the design engineer in deciding how the soil is apt to behave when it is put into one of these structures or a structure is placed on top of it. The procedures in classifying soils involves a number of tests which are mostly made in the Laboratory.

In highway construction, soil is used both in the road structure (i.e. embankments, cut slopes, roadbed in both cuts and fills) and as a foundation to support the embankments, culverts, and bridges. Soil is, therefore, a basic element of the highway, and as such it is necessary that the persons who work with it and use it be able to identify the soil types.

In this section we will deal with the two classification systems used by Mn/DOT. The textural classification which is mainly used as a working tool for field soil selection and the AASHTO classification which is used exclusively for engineering design.

Since we use both systems, a section showing the interrelation of the two systems is also provided.

5-692.601. Soil Identification

The first objective should be to identify and describe soils in such a way that others will understand exactly what is meant; that is, if a silt loam is mentioned, that name should convey essentially the same meaning to each person. Other terms may elaborate on it and describe it more fully. The complete description would then convey a very definite picture of that particular soil.

The following sections are devoted to classifying and describing soil materials in detail. An understanding of the classification procedures will aid the engineer and inspector in the field in identifying soils, in evaluating the engineering properties, in applying better soil selection and in performing the field test more accurately.

5-692.602. Pedological Classification

The more common characteristics of soils by which they may be described include the following:

Texture	Consistency
Color	Compactness
Structure	Cementation

These characteristics are discernible in the field, and, except for the exact texture, they do not have to be determined by laboratory analysis. They do not describe the engineering properties as such, but they are related to such properties as capillarity, compactability, expansion, elasticity, density, supporting power, and others.

The engineering properties associated with soils have been used for classification and are the basis of the AASHTO system. The AASHTO system uses the engineering properties of elasticity, expansion and load bearing capacity based on actual field use along with exact texture as to basis for classification.

5-692.603. Primary Classifier (Texture)

A. Definition of Textures

Texture is a term used to indicate the size of individual particles in a given soil mass and the proportions of each size present. Most natural soil masses consist of a combination of many grain or particle sizes. The distribution of particle sizes and the relative predominance of fine or coarse grains imparts to the soil a distinctive appearance and "feel", which is called texture. The textural terms used to describe soils express the average effect of all the grain sizes or the effect of the predominant group of particles. Texture is the most common term used to identify soils.

B. Soil Components

The principal particle sizes of soil are:

1. Gravel
2. Sand
3. Silt
4. Clay

All soils are made up of one or all of these distinct components in combination. Each component has a definite grain size range and characteristic reaction in the soil mass. The soil particle sizes and their quantity distribution throughout the soil mass are important factors which influence soil properties and performance.

C. Grain Sizes of Soil

The grain size ranges for the above soil components are described in Table 17:

5-692.600- Table 17. Classifying Soils by Grain Size

Particle Size	**Diameter [mm]**	**Sieve Sizes**	
		Passing	**Retained**
Gravel	75 to 2.0	3" (75 mm)	No. 10 (2 μm)
Coarse Sand	20. to 0.425	No. 10 (2 mm)	425μm (No. 40)
Fine Sand	0.075 to 0.002	No. 40 (425 μm)	No. 200 (75 μm)
Silt	0.075 to 0.002	Cannot be separated by sieving. Determined by settling velocity in soil-water suspension	
Clay	Smaller than 0.002		
Colloidal Clay	Smaller than 0.001		

D. Laboratory Determination of Texture:
Since most all soils are made up of a combination of the above particle sizes, it is necessary to separate these particles into the different grain size groups to determine the exact classification. This is done in the laboratory by mechanical analysis.

The percentages of gravel and sand in a representative soil sample are determined by shaking it through the required sieve sizes. The percentages of smaller size particles, silt and clay, both of which pass the 75μm sieve (No. 200), are determined by hydrometer analysis. This involves measuring the settling velocity of these particles when the sample is thoroughly dispersed in a soil water suspension. Since larger, heavier particles settle out of suspension more rapidly, the time rate of settlement provides a measure of the relative size of fine soil grains. Thus as the soil grains continue to settle with elapsed time, the specific gravity of the soil water suspension becomes lighter. A graduated hydrometer immersed in the suspension at increasing time intervals measures the change in specific gravity. By using the hydrometer readings in the proper formula, the percentages of silt and clay in the soil sample can be calculated.

Thus knowing the percentages of each grain size group in the sample, the soil can be assigned a definite textural classification dependent upon the various amount of sand, silt and clay. The textural classification of soils is determined by using the triaxial chart, (see Figure 31).

The basic concept for this textural classification was originated by the United States Bureau of Chemistry and Soils. It defines the main soil classes in relation to their percentage of sand, silt, and clay. Stone and gravel particles larger than the sand size (2mm) [No. 10] sieve ordinarily do not change the basic soil classification. Soils containing in excess of 25% gravel particles are, however, generally termed gravelly or stony soils.

The textural names of the soils are designed to tell as much as possible about the soil in one word or a combination of two or three words. This makes the definitions of soil texture important. With texture given, approximations and estimates of many soil properties can be made, such as bearing value, water holding capacity, susceptibility to frost heave, maximum dry density and optimum moisture content.

The triaxial chart places the soil textures into three main groups on the basis of clay content. The three main groups are then subdivided further.

1. Soils Containing Less than 20% Clay.
   - Sand
   - Loamy Sand
   - Sandy Loam
   - Loam
   - Silt Loam
   - Silt

2. Soils Containing From 20% to 30% Clay.
   - Sandy Clay Loam
   - Clay Loam
   - Silty Clay Loam

3. Soils Containing 30% or More Clay.
   Sandy Clay
   Clay
   Silty Clay

Table 18 shows the soil textures with their gradation limits determined by laboratory mechanical analysis.

E. Field Determination of Texture:

Engineers and inspectors must be able to determine textural classification of soils within a reasonable degree of accuracy in the field in order to perform the duties of soil selection and construction monitoring.

Complete mechanical analysis tests on soil generally cannot be made in the field laboratory. Only the gradation of the coarse fraction (plus No. 200) (75 µm sieve) of the soil sample can be determined in the field by sieve analysis. The fine fraction, which consists of silt and clay particles must be determined in the laboratory by a hydrometer analysis.

Identification of soil texture in the field must therefore be accomplished by the feel and appearance of the soil mass. This requires training and experience. It is one of the most important functions of field soils inspection. Soil identification with reasonable accuracy is essential when performing soil selection and in performing density and moisture control tests on grading.

Soil is classified in the field by using two methods: 1.) forming a cast in the hand, 2.) by pressing or rubbing a moist sample between the thumb and index finger to form a thin ribbon until it breaks under its own weight in a horizontal position. The length of the ribbon is relative to the percent clay in the soil (see Figure 31). These two methods constitute the major field identification procedure tests used to judge soil texture.

In classifying soils, it is important that the soil contains a normal amount of moisture. A normal amount in general is when the soil feels moist to the touch and yet have workability. Ribboning for identification is to be done when the soil moisture is such that the soil sample can be worked by the fingers but does provide some resistance to ribboning. Ribbons should be about 10mm (1/2”) wide and about 3mm (1/8”) thick for best results. It may be difficult at times to positively classify soils by these methods. With practice, experience, and by comparison of soil samples with specimens classified by laboratory analysis, it is possible to become reasonably proficient.

The following descriptions of the soil textural classes are designed to assist the inspector in identifying them in the field. The main soil classes shown in the textural chart are described as well as variations which are likely to be encountered.

Remember that gravel, sand, and pure silt are non plastic materials. Clay is plastic and cohesive. Sand and silt will become more or less plastic when mixed with various proportions of clay.

1. Gravel (G)

Gravel is a combination of stones between a maximum size of 75mm (3”) and minimum diameter of a 2mm (No. 10) sieve. Fine Gravel (FG) is a predominance of stones between the 9.5mm (3/8”) screen and the 2mm (No. 10) sieve. Gravel is easily identified by visual inspection.

2. Sand (S)

Sand is material which passes the 2mm (No. 10) sieve 100%. It contains less than 10% silt performing and clay combined (minus 75μm [No. 200] sieve size particles). It therefore contains 90% or more of sand size particles.

Sand is loose and granular. The individual grains can readily be seen and felt. It is non plastic and therefore cannot be pressed into soil ribbons. If squeezed into a cast in the hand when dry, it will fall apart when the pressure is released. Squeezed when moist, it will form a cast that will hold its shape when the pressure is released but will crumble when touched or jarred slightly.

Coarse Sand (CrS) is sand in which the predominant particle size is between the 2mm (No. 10) sieve and the 425μm (No. 40) sieve.

Fine Sand (FS) is sand in which the predominant particle size is between the 425μm (No. 40) sieve and the 75μm (No. 200) sieve.

Very Fine Sand (VFS) is sand in which practically all particles are close to the 75μm (No. 200) sieve size. Some very fine sand particles will pass the 75μm (No. 200) sieve. At times it is difficult in the field to distinguish between very fine sand and silt.

The plain term Sand (S) is applied when a sample is well graded, containing approximately equal proportions of coarse sand and fine sand.

3. Sand and Gravel (S&G)

Sand and gravel is a mixture of the sand group and gravel group, and is identified by visual inspection. Variations might include the following:

Sand and Fine Gravel (S & FG)
Coarse Sand and Gravel (CrS & G)
Coarse Sand and Fine Gravel (CrS & FG)

4. Loamy Sand (LS)

Loamy Sand passes the 2mm (No. 10) sieve 100%. It contains from 10% to 20% of fine grained silt and clay combined (minus 75μm [No. 200] sieve size particles). It therefore contains from 80% to 90% of the particle sizes called sand.

Loamy Sand is loose and granular. The individual grains can readily be seen and felt. It appears dirty when compared to the classification of sand, due to the higher silt and clay content.

Loamy Sand is non plastic and therefore cannot be pressed into soil ribbons. Squeezed into a lump in the hand when moist, it will form a cast that will hold its shape when the pressure is released. The cast will not only withstand careful handling but some jarring as well without crumbling. This stability of the moist cast differentiates loamy sand from clean sand.

Loamy Sand can be further classed as coarse, fine, or very fine, the proper term depending on the proportions of different sizes of sand particles present.

Loamy Coarse Sand (LCrS)
Loamy Fine Sand (LFS)
Loamy Very Fine Sand (LVFS)

The plain term Loamy Sand (LS) is used when the material is well graded, containing approximately equal proportions of coarse sand and fine sand. The word “loamy” is placed first since these soils are predominantly sands.

5. Sandy Loam (SL)

Sandy Loam contains from 20% to 50% silt and clay combined (minus 75μm [No. 200] sieve size particles) but less than 20% clay. It may contain from 0 to 50% silt and 0 to 20% clay. It must always contain 50% or more sand grains to be classified as Sandy Loam.

Sandy Loam is the first soil of the textural classification which may be termed plastic. When moist, it therefore may be pressed into thin ribbons between the thumb and index finger. Since it contains much sand, the individual sand grains can readily be seen and felt. It contains enough silt and possibly some clay to make it somewhat coherent or stable. Sandy Loam is further qualified as non-plastic, slightly plastic or plastic. This difference, important in field work, is explained as follows:

Slightly plastic Sandy Loam (sl.pl.SL) generally contains from 0 to 10% clay. It may form a thin ribbon from 0 to 19mm (3/4”) in length beyond the tip of the thumb and index finger before breaking under its own weight. The 0 length is more or less the sticking together of the sand grains in a pat when pressed in the fingers rather than the forming of any definite ribbon. It occurs when the clay content approaches zero. As the clay increases to 10%, the ribbon becomes longer up to approximately 19mm (3/4”).

Plastic Sandy Loam (pl.SL) contains from approximately 10% to 20% clay and thus is more plastic or cohesive. It will press into ribbons from 19mm (3/4”) to 37.5mm (1-1/2”) in length as the clay content increases before breaking under its own weight.

Sandy Loam is further classified according to the proportions of different sizes of sand particles present, such as:

slightly plastic Coarse Sandy Loam (sl pl CrSL)
plastic Fine Sandy Loam (pl FSL)
plastic Very Fine Sandy Loam (pl VFSL)

The word "sandy" is placed first since these soils are predominantly loams.

6. Loam (L)

The term "loam" for engineering purposes generally means a combination of sand, silt, and clay. However, in the triangular soil chart, it indicates a soil with definite proportions of sand, silt, and clay.

Loam contains more than 50% silt and clay combined (minus 75µm [No. 200] sieve size particles). It contains from 30% to 50% sand, 30% to 50% silt, and 0 to 20% clay. It is thus a relatively even mixture of sand and silt with less than 20% clay.

Loam is a mellow soil. It has a somewhat gritty feel and yet smoother feel than sandy loam, since most of the sand particles ordinarily consist of fine sand. When moist, it will form a ribbon approximately 5mm (1/4") to 37.5mm (1-1/2") in length and somewhat thinner and stronger than can be formed with sandy loam. The word "loam" is commonly used in agriculture as a term to describe topsoil containing black organic matter, which is easily worked and will support plant growth. However, loam, in engineering terminology, means soil of any color as long as it contains the specified proportions of sand, silt and clay.

7. Silt Loam (SiL) and Silt (Si)

Silt Loam contains from 50% to 80% silt, 0 to 50% sand, and 0 to 20% clay. It must always contain 50% or more of silt particles to be classified as Silt Loam.

Silt contains from 80% to 100% silt, 0 to 20% sand, and 0 to 20% clay.

Silt Loam and Silt have a very fine grain structure. These materials have little or no plasticity. In a dry condition these materials may appear quite cloddy, but the lumps can be readily broken up. The material will feel soft and floury. When in a moist condition, the material will have a smooth and slippery feel and a velvety appearance. Depending on the clay content, these materials may be ribboned. Silt loam may ribbon up to 37.5mm (1-1/2") in length (slightly plastic, 0-19mm [0-3/4"] and plastic 19mm to 37.5mm [3/4" to 1-1/2"]. Silts will not press into a continuous unbroken ribbon but rather into shorter, crumbly, dull appearing segments. These segments may reach lengths up to 10 mm (1/2").

In its natural state in the ground, silt loam and silt are frequently very wet. This is due to their capillary affinity for water. In this condition it runs together and puddles easily when shaken.

All of the above soil classes from 1 through 7 are in the same grouping as they all contain less than 20% clay. They either will not ribbon because of their non-plastic, granular structure or will ribbon into lengths up to 37.5mm (1-1/2") due to the clay content.

8. Clay Loam (CL)

Clay Loam contains from 20% to 50% sand, 20% to 50% silt, and 20% to 30% clay. It is a fine textured soil and uniform in structure as indicated by its percentage composition of sand, silt and clay.

The dry natural soil breaks up into hard clods or lumps, which are difficult to pulverize. When moist, it will form a thin ribbon from 37.5mm (1-1/2") to 62.5mm (2-1/2") in length before

breaking under its own weight. When it is thus ribboned between the thumb and index finger, it offers moderate resistance to deformation; that is, it requires considerable pressure to ribbon.

9. Silty Clay Loam (SiCL)

Silty Clay Loam contains from 50% to 80% silt, 0 to 30% sand, and 20% to 30% clay. The largest percentage of particles are therefore of silt size.

Silty Clay Loam is also a fine textured soil and when dry will form hard clods or lumps. When moist, it will ribbon into length from 37.5mm (1-1/2") to 62.5mm (2-1/2") without breaking. When it is thus pressed between the thumb and index finger it does not offer as much resistance to deformation as clay loam. In other words, it feels softer. At normal moisture content, it feels slippery or "smeary" due to `the high silt content. When smeared in a thin layer on the inside of the thumb, it presents a dull appearance in comparison to clay or clay loam which is shiny.

Silty Clay Loam is usually found in the form of soil pockets when the natural formation consists of clay loam glacial till.

10. Sandy Clay Loam (SCL)

Sandy Clay Loam contains from 50% to 80% sand, 0 to 30% silt, and 20% to 30% clay. The largest percentage of particles are therefore sand. This gives it a gritty feel in comparison to the smooth, slippery feel of Silty Clay Loam.

Due to its high sand content, the sand particles can readily be seen and felt. In spite of its sandy structure, it is plastic and will form ribbons from 37.5mm (1-1/2") to 62.5mm (2-1/2") in length.

Sandy Clay Loam is found in the natural state only occasionally. When soils as plastic as this were geologically formed, the finer grained particles of silt and clay pre dominated.

The three soil classes above, numbered 8 through 10, are in the second group of soils. They are similar as they all contain between 20% and 30% clay. Consequently, in field identification, they will form ribbons from 37.5mm (1-1/2") to 62.5mm (2-1/2") in length, and feel silty or sandy depending on the predominance of silt or sand particles. Clay Loam feels more even textured, neither silty or sandy, because of fairly equal distribution of silt and sand.

11. Clay(C)

Clay contains from 30% to 100% clay, 0 to 50% silt, and 0 to 50% sand. It is very fine textured soil and very plastic.

When dry, clay forms very hard clods or lumps which are extremely difficult to pulverize. When moist, it will form a long, thin, flexible ribbon 62.5mm (2-1/2") or more in length. When it is thus pressed between the thumb and index finger, it offers marked resistance to deformation; that is, it requires a great deal of finger pressure. Clay can be rolled into very thin threads. When smeared in a thin layer on the inside of the thumb, it presents a smooth, shiny surface.

12. Silty Clay (SiC)
Silty Clay contains from 30% to 50% clay, 50% to 70% silt, and 0 to 20% sand. It is very plastic and yet feels smooth and slippery. When moist, it will form a long, thin ribbon 62.5mm (2-1/2") or more in length. The sand it contains, if any, is usually very fine and cannot easily be detected in the soil mass. It is stiff like clay and requires a great deal of finger pressure to ribbon out.

Silty Clay in a natural soil condition may be said to have the appearance and smoothness of butter. It is normally encountered as soil pockets rather than the general soil mass.

13. Sandy Clay (SC)
Sandy Clay contains from 30% to 50% clay, 50% to 70% sand, and 0 to 20% silt. The largest percentage of particles are of sand size and therefore the sand can readily be seen and felt. It is very plastic and yet feels gritty because of the high sand content.

When moist, it will form a long, flexible ribbon 62.5mm (2-1/2") or more in length. It is stiff like clay and requires a good deal of finger pressure to ribbon out.

Sandy Clay is even rarer than sandy clay loam in the natural state and therefore is very seldom encountered.

The last three soil classes, numbered 11 through 13, are in the third group of soils. They are similar as they all contain 30% or more clay. In field identification, they will form ribbons 50mm or more in length because of this similarity. The most common of the three is clay when found in the natural state.

When identifying textural soil classification in the field by ribboning the soil mass between the thumb and index finger, it should be recognized that the length of ribbon designated in the foregoing descriptions does not always indicate exact classification. As an example, let us say that, by laboratory mechanical analysis, a soil contains 28% clay and is classified as clay loam. When identified in the field, it may ribbon to a length of 75mm (3") instead of between 37.5mm (1-1/2") and 62.5mm (2-1/2") and thus be called clay. The difference could be in the plasticity of the clay or other inherent characteristics of the soil. Ribbon lengths are empirical, having been established from experience and observation, so may not reveal true classification in all cases. This is most noticeable where soils are border line between one classification and another. However, when so closely related in texture, they will react similarly when used for construction. It is fundamentally important for the inspector to be able to distinguish between the main soil classes when selecting soils and performing road tests. To fulfill this objective, ribboning and feeling soils provides the most practical means to quickly identify them in the field. For this reason, the method has merit even though not always exact.

By the triangular chart, soils are established into three main groups on the basis of clay content. Clay is the most active ingredient of the component parts of soil. The addition of clay changes the soil characteristics rapidly. The percentage of sand and gradation of the sand particles also have a marked effect upon soil tests. Thus, when the sand is mostly fine sand, or coarse sand, or a relatively even mixture of fine and coarse sand with possibly the addition of some gravel

sizes, the results of such tests as maximum dry density and optimum moisture content are changed.

It should be noted that soil must contain 50% or more of sand particles to be classified in the sandy soil categories at the left side of the chart.
Likewise, soil must contain 50% or more of silt particles to be in the silty soil classes on the right side. When sand and silt are reasonably even in distribution, the uniform textured clayey soils in the center of the chart loam, clay loam and clay are obtained.

F. Feel and Appearance of Soil Mass

Clay: marked resistance to ribbon, roll to thin thread, shiny when smeared

Sandy Clay: highly plastic, 50 to 70% sand, gritty, rarely encountered

Silty Clay: less resistance to ribbon than clay loam, slippery and soft

Sandy Clay Loam: gritty feel, sand particles easily seen and felt, uncommon

Clay Loam: fine textures, uniform and structure, moderate resistance to ribbon

Silty Clay Loam: less resistance than clay loam, slippery, smeary, dull when smeared

Sandy Loam: slightly plastic to plastic, sand grains seen and felt

Loam: mellow, somewhat gritty but smoother than sandy loam

Silt Loam: smooth, slippery or velvety, cloddy when dry, easily pulverized

Silt: smooth, powdery, velvety

Loamy Sand: will form a cast when wet, will stand light jarring

Sand: will form a cast when wet, crumbles easily

(See Figure 31)

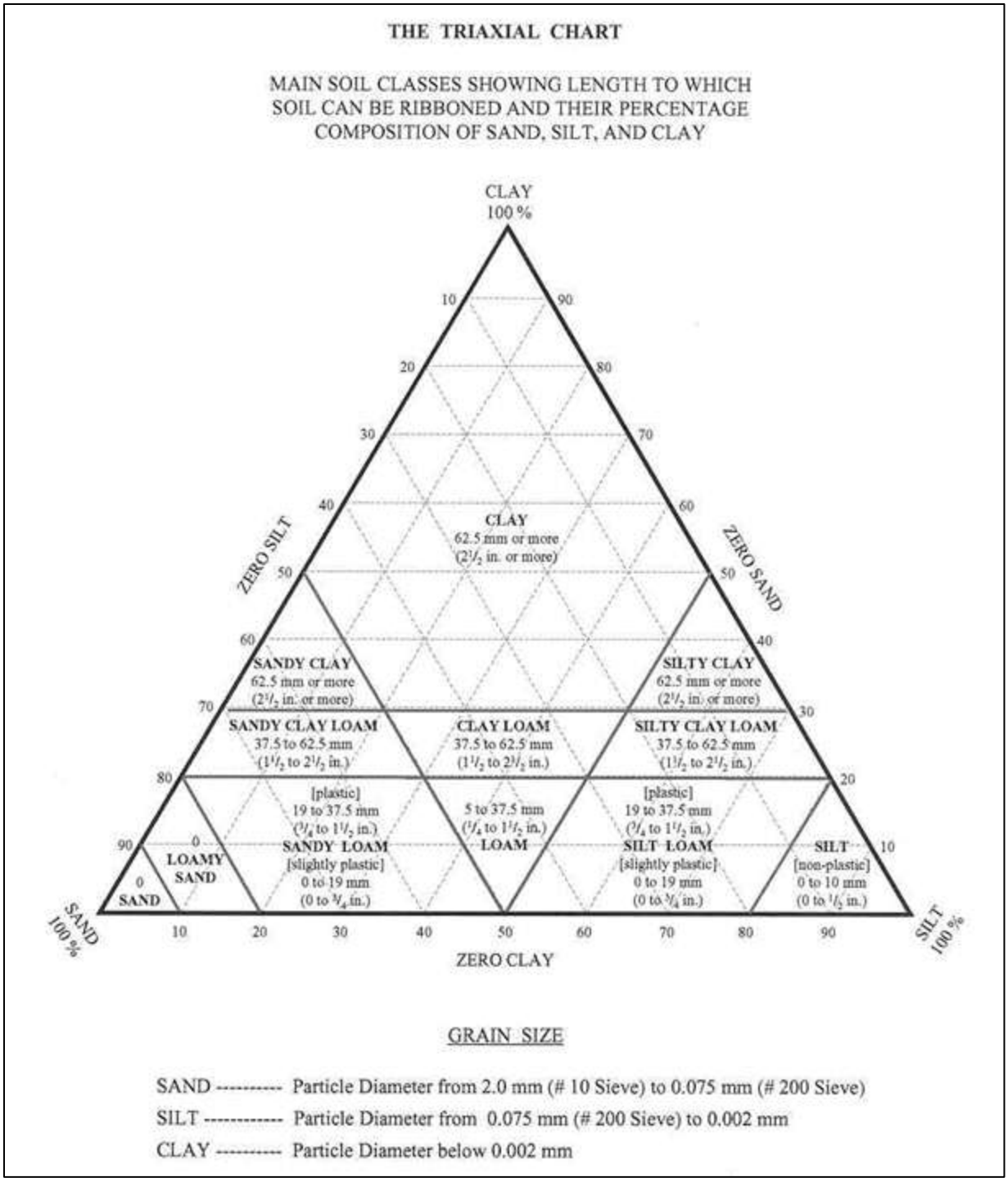

5-692.600-Figure 31. Triaxial Chart

5-692.600-Table 18. Gradation Limit of Textural Soils Group

Soil Class	Gravel %	Coarse Sand %	Fine Sand %	Silt & Clay %	Silt %	Clay %
GROUP 1						
Gravel	90 to 100			0 to 10		0 to 10
Sand & Gravel	25 to 90			0 to 10		0 to 10
Coarse Sand	0 to 25	50 to 100		0 to 10		0 to 10
Sand	0 to 25	0 to 50	0 to 50	0 to 10		0 to 10
Fine Sand	0 to 25		50 to 100	0 to 10		0 to 10
Loamy Sand & Gravel	25 to 50	0 to 50	0 to 50	10 to 20		0 to 20
Loamy Coarse Sand	0 to 25	50 to 90		10 to 20		0 to 20
Loamy Sand	0 to 25	0 to 50	0 to 50	10 to 20		0 to 20
Loamy Fine Sand	0 to 25		50 to 90	10 to 20		0 to 20
Gravelly Sand Loam	25 to 50	25 to 50	0 to 50	20 to 50		0 to 20
Coarse Sand Loam	0 to 25	50 to 80		20 to 50		0 to 20
Sandy Loam	0 to 25	0 to 50	0 to 50	20 to 50		0 to 20
Fine Sandy Loam	0 to 25		50 to 80	20 to 50		0 to 20
Gravelly Loam	25 to 50			50 to 70	30 to 50	0 to 20
Loam	0 to 25	0 to 50	0 to 50	50 to 70	30 to 50	0 to 20
Silt Loam			0 to 50	50 to 100	50 to 100	0 to 20
GROUP 2:						
Gravelly Sand Clay Loam	25 to 80	0 to 80	0 to 80	20 to 50	0 to 30	20 to 30
Gravelly Clay Loam	25 to 50	0 to 50	0 to 50	50 to 80	20 to 50	20 to 30
Sandy Clay Loam	0 to 25	0 to 80	0 to 80	20 to 80	0 to 30	20 to 30
Clay Loam	0 to 25	0 to 50	0 to 50	50 to 80	20 to 50	20 to 30
Silty Clay Loam	0 to 25	0 to 30	0 to 30	70 to 100	30 to 80	20 to 30
GROUP 3:						
Sandy Clay	0 to 25	0 to 70	0 to 70	30 to 50	0 to 20	30 to 50
Clay			0 to 50	50 to 100	0 to 50	30 to 100
Silty Clay			0 to 20	80 to 100	50 to 70	30 to 50

5-692.604. Secondary Classifiers

A. Special Term for Describing Soil

Topsoil: Any of the soil classes described above which contain large amounts of decomposed or partially decomposed organic matter. Top soils are distinguished by their dark brown to black color.

Quicksand: Defines a condition rather than a textural classification of soil. A “quick” condition may occur in gravel, sand, or silt because of an upward flow of water which “lifts” the particles and decreases stability.

Gumbo: A class of peculiar, fine grained soil under poor drainage conditions. When saturated with water, gumbos are impervious and have a waxy or soapy appearance and feel.

Diatomaceous Earth: An accumulation of siliceous cell walls of minute marine plants called diatoms. The soil in such deposits is fine grained, is of uniform texture, and is very slippery when wet.

Marl: A general term applied to any earthy, crumbly deposit containing quantities of calcium carbonate, clay, fine sand, shell residues and carbonaceous material. It is very unstable when placed in water.

Residual Soils: A term applied to soils that remain directly above the parent rock from which they have been derived by physical and chemical disintegration of that bedrock. Residual soils are more prevalent in older geological areas.

Transported Soils: Those which have been carried from their original position to their present location by the elements of nature, such as water, wind, gravity and moving ice.

Till: Unstratified glacial drift soil, usually with stones and boulders intermingled. The term 'till' is normally applied to the lower stratum of soil layers or horizons which are only slightly or not at all weathered by the elements of nature such as freezing, thawing, percolating water, chemical changes, and plant organisms. A till soil thus remains very much in its parent state as deposited by glaciers. A sandy loam soil in the "C" horizon may be called "sandy loam till" (SLT) to describe it more completely if it is known to be of glacial origin.

Heavy (Textured): Applied to soils of fine texture in which clay predominates, with dense structure and firm compact consistency. The term is also applied to soils containing a somewhat higher proportion of the finer particles than is typical of that textural class (as a "heavy sandy loam").

Light (Textured): Applied to soils of coarse to medium texture, with very low silt and clay content, incoherent, single grained structure, and loose consistency. The term is also applied to soils containing somewhat higher proportions of the coarser particles than is typical of that textural class (as a "light loam").

B. Color

In describing soils, color provides a first and quick means of identifying soil layers and the occurrence of similar soils in other localities. Color alone is not sufficient for identification, yet it can serve a useful purpose. To insure uniformity of description, soil colors are determined only when the soil contains moisture. Colors found in soils vary from tan, yellow or red to brown, dark gray or black. Color combinations are often used to make descriptions more complete, for example, a brownish gray soil is a gray soil with a brownish cast.

Mottled: Presence of spots, streaks or splotches of one or more colors in a soil mass of another predominant color. In mottled soils the colors are not mixed and blended, but each is more or less distinct in the general ground color.

Marbled: Presence of two or more distinct colors in approximately equal amounts but not blended. In a marbled soil there is no general or predominant color, as is the case of a mottled soil.

C. Structure

Structure describes the arrangement of individual soil grains into soil aggregations which make up the soil mass. It may refer to the natural arrangement of the soil when in place and undisturbed or to the soil at any degree of disturbance. The terms used below indicate the character of the arrangement and the general shape and size of aggregations.

Cloddy Structure: (Coarse, medium and fine). Aggregates of irregular shape, 37.5mm (1-1/2") to 200mm (8") in diameter, of firm consistency and more or less rounded in shape.

Crumb Structure: (Coarse, medium and fine). Porous aggregates of irregular shape from more than 19mm (3/4") to less than 5mm (1/4") in diameter and of firm to soft consistency.

Hard Pan: A stratum of soil thoroughly cemented to an indurated, "rock like" layer that will not soften when wet. The term "Hard Pan" is incorrectly applied to hard clay layers that are not cemented, or to those layers that may seem indurated, when dry, but which soften and lose their "rock like" character when soaked in water. True hard pan is cemented by materials that are not readily soluble, and definitely and permanently (in nature) limits downward movement of roots and water.

Clay Pan: A layer of stiff, compact, and relatively impervious clay. It is not cemented and can be worked into a soft mass when wet. Often called Gumbo, and many times erroneously called Hard Pan.

Massive Structure: Single grained. Structureless. Showing no evidence of any distinct arrangement of soil particles.

Laminated Structure: An arrangement of the soil mass in very thin plates or layers, less than 1 millimeter (0.04") in thickness, lying horizontal or parallel to the soil surface. Usually medium to soft consistency.

Mealy Structure: A crumb like structure in which the aggregates are of soft to very soft consistency and usually less than 5mm (1/4") in diameter.

Fluffy Structure: A surface condition where the soil particles are loose, of light weight and fine texture, with no cohesion or evidence of arrangement; floury.

D. Consistency

The strength of cohesive soils is quantified by their consistency. Terms utilized to describe consistency are very soft, soft, firm (sometimes referred to as medium stiff), stiff, very stiff, and hard. Consistency is often thought of as relating to plasticity, since in clays short term strength is based on cohesion; however, it is possible to have a very plastic soil (high cohesion) appear very soft.

The following descriptive terms are offered to make this classification and identification a uniform system in the State of Minnesota: very soft, soft, firm, stiff, very stiff and hard.

E. Compactness

The strength of granular soils is quantified by their compactness. It is described as very loose, loose, medium dense (sometimes referred to as medium), dense, or very dense. Again, a sand with a high internal friction angle (indicative of high strength) may be encountered in a very loose condition, so associating strength, per se, with compactness is not necessarily correct.

The (SPT) Standard Penetration Test is widely used to evaluate the compactness of granular soils. This test is performed in accordance with ASTM D-1586.

In the case of silts, it is probably better to associate terms of consistency rather than compactness, since silts are difficult to compact and behave, under many circumstances, similarly to low-plasticity clays.

F. Cementation

A condition occurring when the soil grains or aggregates are caused to adhere firmly and are bound together by some material that acts as a cementing agent (as colloidal clay, iron or aluminum hydrates, lime carbonate, etc.).

The degree of cementation when the soil is wetted should be stated. Some terms indicate the permanence as “indurated,” “hardpan,” etc.

Terms used to describe cementation are: Firmly cemented, indurated (rock like), weakly cemented, softly cemented.

5-692.605. Organic Soils

Soils containing greater than 5 percent organic material by weight are defined as organic soils. Organic soils include plant material in various stages of decay from a condition where the stem and leaf structures can still be detected to a state where the plant tissue has lost its identity and an indefinite mass of organic material exists.

Organic soils can be classified as follows:

Classification	Organic Content by weight %
Non-organic	<2
slightly organic*	2 - 5
organic*	6 - 10
highly organic*	11 - 25
Peat-woody, fibrous, decomposed, etc.	>25

*Insert specific soil type, e.g. slightly organic, Silt Loam, Peaty loam, etc.

Muck is not a soil type and the term is often misused. The term "muck" is correctly used as in the construction item Muck Excavation. Mn/DOT 2105.2A4 & 2106.2A4 reads:

A.4 Muck Excavation
The removal of organic soils as defined in 2105.1.A.10, "Organic Soils," and other unstable soils as designated by the plan, and below the natural ground level of marshes, swamps, or bogs, regardless of the moisture content. Muck excavation is limited to areas over which the roadway embankment or a structure is to be constructed.

5-692.606. AASHTO Classification

A. General
In 1928, the Bureau of Public Roads developed a system for classifying soils for highway engineering purposes based upon the observed performance of subgrade soils under highway pavements. The original system has been revised several times. Today the system is known as the AASHTO system of classification of Soils and Soil - Aggregate Mixtures for Highway Construction Purposes (AASHTO Designation M 145.)

The AASHTO system is an engineering property classification based upon field performance of subgrade soils under highway pavements. Subgrade soil materials are classified into seven major groups designated A-1 through A-7. The soils of each group have similar broad characteristics in common and physically react alike when subjected to loads. This system was developed so that a soil could be given a standard classification, no matter in what locality, county or part of the world it is found. This enabled engineers anywhere to talk the same language.

The AASHTO classification system has been adopted by the Minnesota Department of Transportation to correlate soils in Minnesota with standard classification procedures. The method is therefore included in its entirety in this manual. It is to be remembered that this classification system has been developed for engineering purposes and is not to be confused with the soil textural classification system described in the triangular chart, although the two are related.

B. Scope
Based upon their field performance, soils are classified by this procedure into seven groups which are designated as A-1, A-2, A-3, A-4, A-5, A-6, and A-7. The results of tests made in

accordance with the methods hereinafter specified indicate the physical properties of the soils and serve to identify them with respect to grouping. Evaluation of soils within each group is made by means of a "group index" which is a value calculated by means of an empirical formula derived from observations of the behavior of soil and soil materials in embankments, subgrades, and subbases.

C. Test Procedures

The classification is based upon the results of tests made in accordance with the following standard methods of the AASHTO:

1. Amount of material finer than 75μm (No. 200) Sieve in Aggregate T-11

2. Sieve Analysis of Fine and Coarse Aggregate T-27

3. Particle Size Analysis of Soils T-88

4. Liquid Limit of Soils T-89

5. Plastic Limit of Soils and Plastic Index T-90

D. GROUP INDEX CALCULATION

1. The group index is calculated from the following formula:

   Group index = (F-35) [0.2 + 0.005 (LL-40)] + 0.01 (F-15) (PI-10) in which,
   F = percentage passing 75μm (No. 200) sieve, expressed as a whole number.
   This percentage is based only on the material passing the 75mm (3") sieve.
   LL = liquid limit
   PI = plasticity index

   a. When the calculated group index is negative, report the group index as zero (0).

   b. The group index should be reported to the nearest whole number.

2. Figure 1, AASHTO M 145, also, may be used in estimating the group index, by determining the partial group index due to liquid limit and that due to plasticity index, then obtaining the total of the two partial group indexes.

3. When calculating the group index of A-2-6 and A-2-7 subgroups, only the PI portion of the formula shall be used.

4. The following are examples of calculations of the group index:

   a. Assume that an A-6 material has 55 percent passing the 75μm (No. 200) sieve, liquid limit of 40, and plasticity index of 25.

Then, Group index =

(55-35)[0.2 + 0.005 (40-40)] + 0.01 (55-15) (25-10) = 4.0 + 6.0 = 10

b. Assume that an A-7 material has 80 percent passing the 75µm (No. 200) sieve, liquid limit of 90, and plasticity index of 50.

Then, Group index =

(80-35)[0.2 + 0.005(90-40)] + 0.01 (80-15) (50-10) =20.3 + 26.0 = 46.3

c. Assume that an A-4 material has 60 percent passing the 75µm (No. 200) sieve, liquid limit of 25, and plasticity index of 1.

Then, Group index =

(60-35)[0.2 + 0.005 (25-40)] + 0.02 (60-15) (1-10)= 25 X (0.2 - 0.075) +

0.01(45)(-9) = 3.1 - 4.1 = -1.0

Report as 0.

d. Assume that an A-2-7 material has 30 percent passing the 75µm (No. 200) sieve, liquid limit of 50, and plasticity index of 30.

Then, Group index =

0.01(30-15) (30 10) = 3.0 or 3
(Note that only the PI portion of formula was used.)

E. Basis for Group Index Formula

1. The empirical group index formula devised for within group evaluation of the "clayey granular materials" and the "silt clay materials" is based on the following assumptions:

   a. Materials falling within Groups A-1-a, A-1-b, A-2-4, A-2-5, and A-3 are satisfactory as subgrade materials when properly drained and compacted or can be made satisfactory by addition of small amounts of natural artificial binders.

   b. Materials falling within the "clayey granular" Groups A-2-6 and A-2-7 and the "silt clay" Groups A-4, A-5, A-6, and A-7 will range in quality as subgrade from the approximate equivalent of good A-2-4 and A-2-5 subgrades to fair and poor subgrades requiring a layer of subbase material or an increased thickness of base coarse over that: required under a., in order to furnish the adequate support for traffic loads.

   c. The assumed critical minimum percentage passing the 75µm (No. 200) sieve is 35 neglecting plasticity, and 15 as affected by plasticity indexes greater than 10.

   d. Liquid limits of 40 and above are assumed to be critical.

e. Plasticity indexes of 10 and above are assumed to be critical.

f. For soils that are non-plastic and when the liquid limit cannot be determined, the group index shall be considered zero (0).

2. There is no upper limit of group index value obtained by use of the formula. The adopted critical values of percentage passing the 75µm (No. 200) sieve, liquid limit and plasticity index, are based on an evaluation of subgrade, subbase and base course materials by several highway organizations that use the tests involved in this classification system.

3. Under average conditions of good drainage and thorough compaction, the supporting value of a material as subgrade may be assumed as an inverse ratio to its group index; that is, a group index of 0 indicates a "good" subgrade material and group index of 20 or greater indicates a "very poor" subgrade material.

F. Classification

1. General

The classification is made by using the test limits and group index values shown in Table 19.

Classification Procedure. With required test data available, proceed from left to right in Table 19, and the correct group will be found by process of elimination. The first group from the left into which the test data will fit is the correct classification. All limiting test values are shown as whole numbers. If fractional numbers appear on test reports, convert to nearest whole number for purposes of classification. Group index values should always be shown in parentheses after group symbol as A-2-6 (3), A-4 (5), A-6 (12), A-7-5 (17), etc.

2. Definition of Gravel, Sand and Silt Clay

The terms "gravel", "coarse sand", "fine sand", and "silt clay", as determined from the minimum test data required in this classification arrangement and as used in subsequent word description, are defined as follows:

a. Gravel Material passing sieve with 75mm (3") square openings and retained on the 2mm (No. 10) sieve.

b. Coarse Sand Material passing the 2mm (No. 10) sieve and retained on the 425µm (No. 40) sieve.

c. Fine Sand Material passing the 425□m (No. 40) sieve and retained on the 75µm (No. 200) sieve.

d. Combined Silt and Clay Material passing the 75µm (No. 200) sieve.

e. Boulders (retained on 75µm (3") sieve) should be excluded from the portion of the sample to which the classification is applied, but the percentage of such material, if any, in the sample should be recorded.

f. The term "silty" is applied to fine material having plasticity index of 10 or less and the term "clayey" applied to fine material having plasticity index of 11 or greater.

3. AASHTO Classification System (formerly, Highway Research Board Classification)

This classification system divides soils into two major groups. One group which includes the A-1, A-2 and A-3 classes is composed of soils that have 35% or less passing a 75μm (No. 200) sieve. The second group, A-4, A-5, A-6, A-7, is composed of soils that have more than 35% passing a 75μm (No. 200) sieve.

The two major groups in the soil classification are further divided into additional groups and subgroups as follows:

a. Granular materials:

Group A-1: Well graded mixtures of stone fragments of gravel ranging from coarse to fine with a non plastic or slightly plastic soil binder. However, this group also includes coarse materials without soil binder.

Subgroup A-1-a: Materials consisting predominantly of stone fragments or gravel, either with or without a well graded soil binder of fine materials.

Subgroup A-1-b: Materials consisting predominantly of coarse sand either with or without a well graded soil binder.

Group A-3: Materials consisting of sands deficient in coarse material and soil binder. Typical is fine beach sand or fine desert blow sand, without silt or clay fines or with a very small amount of non-plastic silt. This group also includes stream deposited mixtures of poorly graded fine sand and a limited amount of coarse sand and gravel. These soils make suitable subgrades for all types of pavements when confined and damp. They are subject to erosion and have been known to pump and blow under rigid pavements. They can be compacted by vibratory, pneumatic tired, and steel wheel rollers but not with a sheepsfoot roller.

Group A-2: This group includes a wide variety of "granular" materials which are borderline between the materials falling in Groups A-1 and A-3 and the silt clay materials of Groups A-4, A-5, A-6, and A-7. It includes all materials containing 35 percent or less passing the 75μm (No. 200) sieve which cannot be classified as A-1 or A-3.

Subgroups A-2-4 and A-2-5: include various granular materials containing 35 percent or less passing the 75μm (No. 200) sieve and with a minus 425μm (No. 40) portion having the characteristics of the A-4 and A-5 groups. These groups include such materials as gravel and coarse sand with silt contents or plasticity indexes in excess of the limitations of Group A-1, and fine sand with non-plastic silt content in excess of the limitations of Group A-3. Subgroups A-2-6 and A-2-7 include materials similar to those described under Subgroups A-2-4 and A-2-5, except that the fine portion contains plastic clay having the characteristics of the A-6 or A-7 group. The approximate combined effects of plasticity indexes in excess of 10 and percentages passing the 75μm (No. 200) sieve in excess of 15 is reflected by group index values of 0 to 4.

A-2 soils are given a poorer rating than A-1 soils because of inferior binder, poor grading, or a combination of the two. Depending on the character and amount of binder, A-2 soils may become soft during wet weather and loose and dusty in dry weather when used as a road surface. If, however, they are protected from these extreme changes in moisture content, they may be quite stable. The A-2-4 and A-2-5 soils are satisfactory as base materials when properly compacted and drained, while A-2-6 and A-2-7 soils may lose stability because of capillary saturation or lack of drainage. A-2-6 and A-2-7 soils with low percentages of minus 75µm (No. 200) material are classified as good bases, whereas these same soils with high percentages of minus 75µm (No. 200) and P.I.'s of 10 or higher are questionable as a base material. Frequently the A-2 soils are employed as a cover material for very plastic subgrades.

b. Silt Clay Materials:

Groups A-4: The typical material of this group is a non-plastic or moderately plastic silty soil usually having 35 percent or more passing the 75µm (No. 200) sieve. The group incudes also mixtures of fine silty soil and up to 64 percent of sand and gravel retained on the 75µm (No. 200) sieve. The group index values range from 1 to 8, with increasing percentages of coarse material being reflected by decreasing group index values. These predominantly silty soils are quite common in occurrence. Their texture varies from sandy loams to silty and clayey loams. With the proper amount of moisture present, they may perform well as a pavement component. However, they frequently have an affinity for water and will swell and lose much of their stability unless properly compacted and drained. Moreover, they are subject to frost heave. Since these soils do not drain readily and may absorb water by capillarity with resulting loss in strength, the pavement structural design section should be based on the strength of the soils when saturated. The silty loams are often difficult to compact properly. Careful field control of moisture content and pneumatic tired rollers are normally required for proper compaction.

Group A-5: The typical material of this group is similar to that described under Group A-4, except that it is usually of diatomaceous or micaceous character and may be highly elastic as indicated by the high liquid limit. The group index values range from 1 to 12, with increasing values indicating the combined effect of increasing liquid limits and decreasing percentages of coarse material. These soils do not occur as widely as the A-4 soils. They are normally elastic or resilient in both the damp and semi dry conditions. They are subject to frost heave, erosion, and loss of stability if not properly drained. Since these soils do not drain readily and may absorb water by capillarity with resulting loss in strength, the pavement structural design section should be based on the strength of the soils when saturated. Careful control of moisture content is normally required for proper compaction.

Group A-6: The typical material of this group is a plastic clay soil usually having 35 percent or more passing the No. 200 (75µm) sieve. The group includes also mixtures of fine clayey soil and up to 64 percent of sand and gravel retained on the No. 200 (75µm) sieve. Materials of this group usually have high volume change between wet and dry states. The group index values range from 1 to 16, with increasing values indicating the combined effect of increasing plasticity indexes and decreasing percentages of coarse material. These soils are quite common in occurrence and are widely used in fills. When

moisture content is properly controlled, they compact quite readily with either a sheepsfoot or pneumatic tired roller. They have high dry strength but lose much of this strength upon absorbing water. The A-6 soils will compress when wet and shrink and swell with changes in moisture content. When placed in the shoulders adjacent to the pavement, they tend to shrink away from the pavement edge upon drying and thereby provide an access route to the underside of the pavement for surface water. The A-6 soils do not drain readily and may absorb water by capillarity with resulting loss in strength. Therefore, the pavement structure design section should be based on the strength of the soils when saturated.

Group A-7: The typical materials and problems of this group are similar to those described under Group A-6, except that they have the high liquid limits characteristic of the A-5 group and may be elastic as well as subject to high volume change. The range of group index values is 1 to 20 with increasing values indicating the combined effect of increasing liquid limits and plasticity indexes and decreasing percentages of coarse material.

Subgroup A-7-5: includes those materials with moderate plasticity indexes in relation to liquid limit and which may be highly elastic as well as subject to considerable volume change.

Subgroup A-7-6: includes those materials with high plasticity indexes in relation to liquid limit and which are subject to extremely high volume change.

Highly organic soils may be classified in an A-8 group. Classification of these materials is based on visual inspection, and is not dependent on percentage passing the No. 200 (75µm) sieve, liquid limit or plasticity index. The material is composed primarily of partially decayed organic matter, generally has a fibrous texture, dark brown or black color and odor of decay.

These organic materials are unsuitable for use in embankments and subgrades. They are highly compressible and have low strength.

5-692.600- Table 19. Classification of Soil-Aggregate Mixtures

General Classification	Granular Materials (35% or less passing 75µm) [No. 200]							Silt-Clay Materials (More than 35% passing 75µm) [No. 200]			
Group Classification	A-1		A-3*	A-2				A-4	A-5	A-6	A-7
	A-1-a	A-1-b		A-2-4	A-2-5	A-2-6	A-2-7				A-7-5 A-7-6
Sieve Analysis:											
Percent passing:											
2mm (No. 10)	50 max.	---	---	---	---		---	---	---	---	---
425µm (No. 40)	30 max.	50 max.	51 min.	---	---	---	---	---	---	---	---
75µm (No. 200)	15 max.	25 max.	10 max.	35 max.	35 max.	35 max.	35 max.	36 min.	36 min.	36 min.	36 min.
Characteristics of fraction passing No. 425µm (No. 40):											
Liquid Limit	---		---	40 max.	41 min.	40 max.	41 min.	40 max.	41 min.	40 max.	41 min.
Plasticity Index	6 max.		N.P.	10 max.	10 max.	11 min.	11 min.	10 max.	10 max.	11 min.	11 min**
Usual Types of Significant Constituent Materials	Stone Fragments Gravel and Sand		Fine Sand	Silty or Clayey Gravel and Sand				Silty Soils		Clayey Soils	
General Rating as Subgrade	Excellent to Good							Fair to Poor			

The placing of A-3 before A-2 is necessary in the "left to right elimination process" and does not indicate superiority of A-3 over A-2.
**Plasticity Index of A-7-5 subgroup is equal to or less than LL minus 30. Plasticity Index of A-7-6 subgroup is greater than LL minus 30.

5-692.607. Soil Selection Guide for Field Inspectors

A. General

One of the most important functions of the grading inspector is the selection of soils for placement in the road structure. The embankment soils are the foundation materials that will ultimately support the loads imposed on the finished road structure and the soils selected for placement in the upper portion of the grade should be the best available. This section of the Manual is designed to assist the inspector to evaluate the soils on his project and to select the best soils for embankment construction.

In order to intelligently select soils for placement in the grade, it is necessary to understand what engineering properties are desirable and to be able to identify, in the field, soils having those properties.

Soils are composed of four components, gravel, sand, silt and clay. All soils are made up of one or more of these components in varying combination. The influence of each of these components affects the performance of a foundation soil. Gravel is relatively frost free and is not as susceptible to moisture changes as silt, sand or clay. Sand, if it is sharp edged and angular, helps prevent slippage in the soil mass, is not susceptible to frost or minor moisture changes and contributes to the stability of the embankment. Silt is highly susceptible to moisture changes, has a fairly large volume change between the wet and dry states and when silt is the predominant component, the soil is unstable if exposed to moisture. In small quantities, silt fills voids and helps to provide a well graded, dense soil mass. Clay includes a wide range of materials from highly stable to unstable soils. In the proper proportion, it provides cohesion and helps to cement the soil mass together and increase the stability. A well

graded soil combining all of the above components in the proper proportions will provide a dense, highly stable embankment.

Most of the tests made to measure the engineering properties of soils cannot be made in the field. These tests include the determination of the silt and clay fractions, the liquid limit and plastic limit tests and the computations to determine the AASHTO group classification. Although, these tests cannot be made in the field, they have been made for samples submitted to the laboratory by the Soils Engineer during his soil survey and copies of these tests should be obtained from him and used by the inspector to compare with his field identifications to help control the work. The tests are also routinely made on all samples submitted to the laboratory during construction.

The test results of laboratory samples are reduced to 3 significant terms:

1. Textural Classification

2. AASHTO classification system which classifies soils into 7 groups designated A-1 through A-7.

3. Group Index which is a numerical rating that can range from 0 to 20 or more with the best soils having a value of 0 and the poorest having values of 20 or greater. The textural classification can be determined in the field by visual inspection and by "feel". Comparison of like textural classifications can provide an estimate of the AASHTO group classification. With practice, considerable proficiency can be attained.

B. Soil Identification

Table 20 summarizes a quick, simple method of identifying soils in the field.

If the information furnished by the AASHTO Classification System is to be used effectively by the Inspector, it is necessary to provide a quick, simple method of identifying soils in the field having the same characteristics as those tested in the laboratory. The laboratory report identifies the sample by "Textural Class". The textural class is determined from the proportions of sand, silt and clay in the sample by means of the triangular chart. The textural classification of soils can be determined in the field by "feel" and visual inspection. By comparison with the laboratory samples, an estimate of the AASHTO group classification can be obtained and the textural classification can be used as a guide in selecting embankment soils. The field method for determining the textural classification involves determining the effect of sand grains by "feel" and the effect of plastic soils by forming a cast in the hand and by pressing or rubbing a moist sample between the thumb and forefinger to form a thin ribbon until it will break under its own weight when held in a horizontal position.

5-692.600- Table 20. Soil Identification

SOIL IDENTIFICATION					
TEXTURAL CLASS	**IDENTIFICATION BY FEEL**	**RIBBON LENGTH**	**AASHTO GROUP (H.R.B. CLASS)**	**GROUP INDEX**	**RATING FOR UPPER EMB.**
Gravel (G)	Stones: Pass 75mm (3") sieve, Retained on 2mm (No. 10)	0	A-1-a	0	Excellent
Fine Gravel (FG)	Stones: Pass 9.5mm (3/8") sieve, Retained on 2mm (No. 10)	0	A-1-a	0	Excellent
Sand (S)	100% pass 2mm (No. 10). Less than 10% silt and clay	0	A-1-b	0	Excellent
Coarse Sand (CrS)	Pass 2mm (No. 10), Ret. 425µm (No. 40).	0	A-1-a or A-1-b	0	Excellent
Fine Sand (FS)	Most will pass 425µm (No. 40), Gritty, non-plastic	0	A-1-b or A-3	0	Excellent to Good
Loamy Sand (LS)	Grains can be felt. Forms a cast.	0	A-2-4 or A-2-5	0	Excellent to Good
Sandy Loam (SL)					
a. sightly plastic (slpl)	0-10% clay. Gritty.	0 - 19mm (0-3/4")	A-2-4, A-2-6 or A-2-7	0 - 4	Excellent to Good
b. plastic (pl)	10-20% clay. Gritty.	19mm (0-3/4") - 37.5mm (1 1/2")	A-4	1 - 13	Excellent to Good
Loam (L)	Gritty, but smoother than SL.	5mm (1/4") - 37.5mm (1 1/2")	A-4	1 - 13	Excellent to Good
Silt Loam (SiL)					
a. sightly plastic (slpl)	0-10% clay. Smooth, slippery or velvety. Little Resistance	0 - 19mm (3/4")	A-4	0-13	Fair to Poor
b. plastic (pl)	10-20% clay. Smooth, slippery or velvety. Little Resistance .	19mm (0-3/4") - 37.5mm (1 1/2")	A-4	1 - 13	Fair to Poor
Silt (Si)	>80% Silt. Small, slippery or velvety. Little Resitance.	0 - 15mm (0-1/2")	A-4	1 - 13	Poor
Clay Loam (CL)	Smooth, shiny, considerable resistance.	37.5mm (1 1/2") - 62..5mm (2 1/2")	A-6	1 - 40	Good to Fair
Silty Clay Loam (SiCL)	Dull appearance, slippery, less resistance.	37.5mm (1 1/2") - 62..5mm (2 1/2")	A-6 or A-5	1 - 40	Fair to Poor
Sandy Clay Loam(SCL)	Somewhat gritty. Considerable resistance.	37.5mm (1 1/2") - 62..5mm (2 1/2")	A-6 or A-5	1 - 40	Good to Fair
Clay (C)	Smooth, shiny, long thin ribbon.	> 62..5mm (2 1/2")	A-7	1 - 40	Fair to Poor
Silty Clay (SiC)	Buttery, smooth, slippery.	> 62..5mm (2 1/2")	A-7 or A-7-5	1 - 40	Poor
Sandy Clay (SC)	Very plastic but gritty. Long, thin ribbon.	> 62..5mm (2 1/2")	A-7 or A-7-6	1 - 40	Fair to Poor

1. Gravel (G)

A combination of stones that will pass a 75mm (3") sieve and be retained on a 2mm (3/8") sieve. Fine Gravel (FG) has a predominance of stones between the 9.5mm (No. 10) and 2mm (No. 10) sieves. These materials can be classified by visual inspection. The AASHTO classification is A-1-b and the Group Index is 0.

2. Sand (S)

100% of this material will pass a 2mm (No. 10) sieve and will have less than 10% silt and clay combined. It will not form a ribbon. It will generally fall in the A-1-b group with a Group Index of 0.

Coarse Sand (CrS). The predominant size is material that will pass a 2mm (No. 10) sieve and be retained on a 425µm (No. 40) sieve. It will not form a ribbon. AASHTO classification, A-1-a. Group Index 0.

Fine Sand (FS) the predominant size is material that will pass the 425µm (No. 40) sieve and be retained on a 75µm (No. 200) sieve. It will not form a ribbon. AASHTO classification, A-1-b or A-3, Group Index, 0.

3. Loamy Sand (LS)

100% of this material will pass a 2mm (No. 10) sieve and will contain between 10 and 20% of the fine grained silt and clay. This material is loose and granular when dry and the individual grains can be seen and felt. When moist, it will form a cast, but because it is non-plastic, it cannot be pressed into a ribbon. Loamy sand can be further classified as Loamy Coarse Sand (LCrS). Loamy Fine Sand (LFS) or Loamy Very Fine Sand (LVFS). These soils will be generally classified as A-2-4 or A-2-5, but may be classified as A-3 or A-1-b. Group Index, 0.

4. Sandy Loam (SL)

This soil contains 20% to 50% silt and clay combined, but less than 20% clay. It must always contain 50% or more sand grains to be classified as sandy loam. Sandy loam is divided into two main groups, slightly plastic and plastic sandy loam.

Slightly Plastic Sandy Loam (sl pl SL) generally contains 10% or less clay. It will form a thin ribbon 0 19mm (0-3/4”) in length before breaking under its own weight. AASHTO classification, A-2-4, A-2-6 or A-2-7, Group Index 0 to 4.

Plastic Sandy Loam (pl SL) contains about 10% to 20% clay. It will feel gritty and can be pressed into a ribbon form 19mm (0-3/4”) to 25mm (1”) in length. Generally, the approximate group index value(s) for AASHTO classifications for A-2-4 and A-2-5 is 0 and for A-2-6 and A-2-7, the values range from 1-13.

5. Loam (L)

Loam always contains more than 50% silt and clay combined. It is a relatively even mixture of sand and silt with less than 20% clay. It has a somewhat gritty feel but is smoother than a sandy loam. It will form a ribbon 5mm (1/4”) to 37.5mm (1-1/2”) in length, but will be thinner and stronger than can be formed with sandy loam. AASHTO classification A-4. The Group Index values range from 1 to 13.

6. Silt Loam (SiL) and Silt (Si)

Silt Loam contains more than 50% silt, 0 to 50% sand and less than 20% clay (If the soil contains more than 80% silt and 0 to 20% sand, it is classified as a silt.) When pressed between the fingers, it will offer little resistance to pressure and feels smooth, slippery or “velvety”. Silt Loam is classified as slightly plastic when the ribbon length is between 0 and 19 mm (0 and 3/4”) and is classified as plastic Silt Loam when the ribbon length is between 19mm (3/4”) and 37.5mm (1-1/2”) Pure silt is non plastic and will not press into a continuous ribbon, but it will press into ribbons of up to 0 -10mm (0-1/2”) in length, depending on the clay content AASHTO Classification, A-4, Group Index, 0 to 13.

7. Clay Loam (CL)
Clay loam contains 20% to 30% clay, 20% to 50% silt and 20% to 50% sand. It is fine textured and will form a ribbon from 37.5mm (1-1/2") to 62.5mm (2-1/2") in length before breaking. It requires considerable pressure to form a ribbon. AASHTO classification, A-6, Group Index, 1 to 40.

8. Silty Clay Loam (SiCL)
Silty Clay Loam contains 20% to 30% clay, 50% to 80% silt and 0 to 30% sand. This is a fine textured soil and will form a ribbon 37.5mm (1-1/2") to 62.5mm (2-1/2") in length without breaking. It does not offer as much resistance to pressure as clay loam and has a dull appearance, but is slippery. AASHTO classification A-6, but may be an A-5, if elastic, Group Index, 1 to 40.

9. Sandy Clay Loam (SCL)
Sandy Clay Loam contains 20% to 30% clay, 50% to 80% sand and 0 to 30% silt. It has a gritty feel compared to the more slippery feel of clay loam. It will form a ribbon 37.5mm (1-1/2") to 62.5mm (2-1/2") in length. AASHTO classification, A-6 Group Index, 1 to 40.

10. Clay (C)
Clay contains from 30% to 100% clay, 0 to 50% silt and 0 to 50% sand. It is smooth and shiny and will form a long, thin, flexible ribbon 62.5mm (2-1/2") or more in length. AASHTO classification A-7. Group Index, 1 to 40.

11. Silty Clay(SiC)
Silty Clay contains 30% to 50% clay 50% to 70% silt and 0 to 20% sand. It is very plastic but feels smooth and slippery and will form a ribbon 62.5mm (2-1/2") or more in length. It is buttery. AASHTO classification, A-7 or A 7-5, Group Index, 1 to 40.

12. Sandy Clay (SC)
Sandy Clay contains 30% to 50% clay, 50% to 70% sand and 0 to 20% silt. It is very plastic, but feels gritty. It will form a long, thin ribbon 62.5mm (2-1/2") or more in length. AASHTO classification A-7 or A 7-6. Group Index, 1 to 40.

The group index values shown for: Soils No.'s 4, 5 and 6 decrease with increasing percentages of coarse material. Soils No.'s 7, 8 and 9 increase with increasing percentage of coarse material. Soils No.'s 10, 11 and 12 increase due to the combined effect of increasing liquid limits and plasticity indexes and decreasing percentages of coarse material.

5-692.620. Soil Profile

5-692.621. Definition (Soil Profile)
"Soil profile" is the term applied to a vertical section from the ground surface down through the weathered soil horizons and into the underlying, parent material. This term was originally used by soil surveyors in the method developed by them for mapping soils for agricultural purposes. It has since been adapted to use quite commonly by engineers in making soil surveys for engineering purposes.

The term "soil horizon" refers to a soil condition formed by the process of weathering and should not be confused with differing soil types, which commonly form in layers as a result of glacial deposition. By the following definitions, there are only four (A through D) soil horizons possible, while any number of soil types or layers may be present in a highway cut.

5-692.622. Development of Soil Profile

The soil profile is composed of a series of distinct soil layers, or horizons as they are called. These horizons are the result of weathering action of the elements through centuries of time upon the parent material or original unweathered geological formation. This parent material when first deposited by glaciers, by wind, or by water was the same at the surface as down within the deposit; that is, there were no horizons of weathered soil at the surface. These horizons developed later through the action of water, wind, sun, freezing and thawing and bacteriological life which evolved with growing and dying vegetation.

Gradually, in humid regions, these processes resulted in leaching out some of the water soluble materials in the uppermost or top zone. Percolating water carried with it the soluble matter together with the fine soil material in suspension as it seeped downward. As the rate of downward flow slowed with depth, the soluble material and soil in suspension were deposited at a lower level, resulting in a zone of accumulation. As a consequence, the top soil horizon became lighter in texture as some of the finer clay particles were carried out of it. The second zone then became heavier textured due to the clay and other substances added to it. In standard soil terminology, these soil horizons are designated as:

"A" Horizon

This is the surface or top zone of soil. It is generally “lighter” textured, sandier, and more friable than the underlying horizons. It is usually distinguished by a darker color than the lower horizons because of the accumulation of decomposed organic matter. As a result of this high organic content, “A” horizon soil exhibits undesirable and unsatisfactory engineering characteristics, such as high compressibility and elasticity, and unfavorable resistance to compaction.

"B" Horizon

The second soil zone below the surface is known as the “B” horizon. It is sometimes referred to as the zone of accumulation due to the collection of material leached out of the “A” horizon. The “B” horizon is fairly uniform in color and of a lighter color than the “A” horizon. It generally varies from about 0.5m (1-1/2’) to 1m (3’)in thickness. “B” horizon soil is normally heavier textured than the “A” horizon but is uniform and evenly textured. For this reason, it is often the most desirable material for highway construction.

"C" Horizon

The "C" horizon is the stratum below the "B" horizon and is the third zone below the surface. "C" horizon material remains in the same physical and chemical state as when it was first deposited. It is the unweathered, parent material. It is generally lighter in color than both the "A" and "B" horizons and thus readily distinguished from the overlying zone. It may be of indefinite thickness, extending below the elevation of interest to the highway engineer even in the deep cuts. It is entirely possible that the "C" will be composed of several soil types or

layers. If the overlying soil is inplace weathered bedrock (residuum) then the “C” horizon will be parent bedrock.

"D" Horizon

The stratum of material underlying the "C" horizon is known in geology as the "D" horizon. The "D" horizon is ordinarily embedded rock which is not the soils parent material and not generally of importance in soils engineering. Only a few meters or as much as a few hundred meters may separate the "A" and "B" horizons from the bedrock.

5-692.623. Prairie Soils

In prairie regions, the "A" horizon acquires its dark color because of the accumulation of organic matter. The growth of vegetation goes on in cycles; it grows, dies, and decomposes. The decomposed or partly decomposed carbonaceous matter thus produced imparts the dark coloring to the soil, ranging from gray to dark brown to black. Intensity of coloring and its depth depend upon the kind of vegetation, climate, topography, and other factors. In Minnesota, the "A" horizon may be less than 100mm (4”) thick on the tops of knolls in hilly country where erosion removes it about as fast as it develops. In low lying poorly drained areas, it may be as thick as 1 to 2 meters (3 to 6 feet) and more where vegetation grows abundantly and additional material may be washed in and deposited. The "B" horizon is frequently more uniform in thickness within a given area, since it is not affected as much by erosion.

5-692.624. Forest Soils

In forested country, where forest conditions have prevailed, the "A" horizon is usually light gray in color, sometimes becoming almost a white or ashy color when dry. The soil is also typically light textured and usually cohesionless. A layer of leaf mold may often occur as a thin cover only 25 to 50 mm (1-2 inches) thick over the mineral soil. The "B" horizon soil is frequently quite heavy and plastic. Forest soils having these characteristics are called "Podsols" when the light colored "A" horizon is strongly developed. When not so strongly developed, they are said to be "podsolized."

5-692.625. Types of Surficial Geological Deposits in Minnesota

The general terrain through or on which any transportation project will be located will be composed of one or more individual land forms. The soil materials in each of these land forms is related to the mode of deposition and subsequent weathering or reworking. Recognition of typical Minnesota land forms will provide an insight into the general type of soil to be encountered and thus the anticipated degree of uniformity and engineering characteristics.

Almost all of the topography in Minnesota is related to the Wisconsin glacial period, which is the name given to the last of six major ice advances into the State (Figure 32).

The last ice remnants of this glacial period retreated from the State 10,000 12,000 years ago. Soils deposited or formed since that time is referred to as being of recent or modern origin. Most Minnesota soils are related in some way to a glacial period, but some recent river or swamp deposits exist, as do residual soils which have weathered in-place on top of the bedrock surface. It is frequently difficult to distinguish some recent soils from similar older glacial soils.

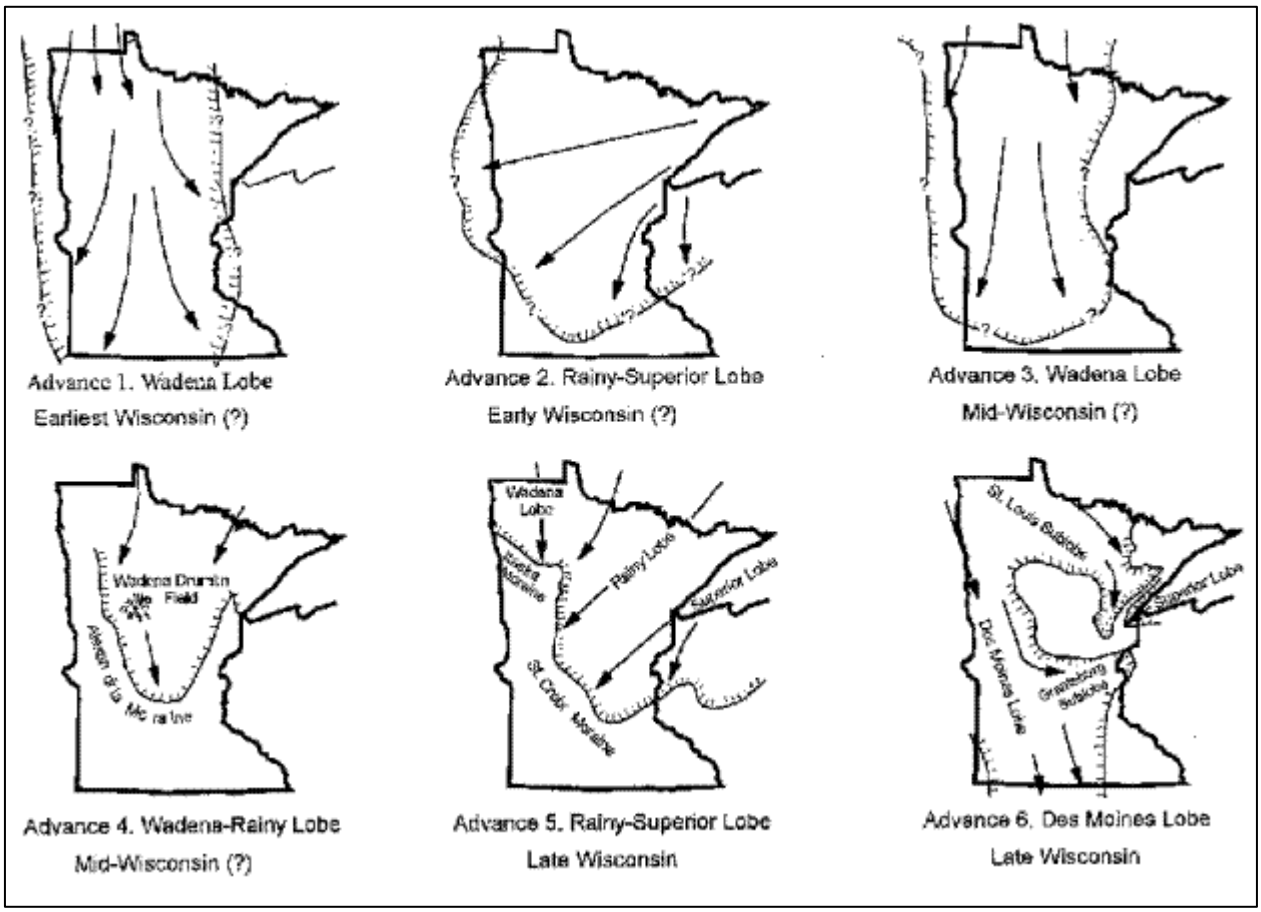

5-692.600-Figure 32. Wisconsin Glaciation Ice Activity (Ojakangas & Matsch, 1982)

Soils in Minnesota can be associated with one of five categories of surficial geologic deposits: glacial drift, windblown deposits, recent deposits, gravity deposits and residual soils.

A. Glacial Drift

All soil materials derived from or directly related to glacial activity can be collectively referred to as drift. This would include such diverse soils as glacial lake clays, outwash sands and gravels, clay loams, sandy loam till, etc. Drift thickness are as great as 150 meters (500 feet) in parts of northwestern and central Minnesota.

Wisconsin glaciation is characterized by several advances of four major ice lobes protruding from the main ice sheet in Canada into Minnesota. These four lobes, distinguished by their flow direction are the Wadena Lobe, Rainy Lobe, Superior Lobe and Des Moines Lobes. The Wisconsin glaciation is summarized in Figure 32.

The Rainy and Superior lobes advancing from the northeast (Patrician and Labradorean ice centers) entered the state through the Iron Range and Arrowhead Regions, overriding reddish colored sandstone, iron formations, and igneous and metamorphic bedrock. Rock picked up by this ice is therefore very hard usually reddish or gray black in color and the soils deposited have a reddish to reddish brown cast and are generally sandy in texture. Soils of northeastern origin, frequently called “red drift,” cover northeastern Minnesota north of the Twin Cities area

and generally west to the Mississippi River. These soils generally have a soil texture of sandy loam.

The Wadena and Des Moines lobes advanced into Minnesota from the north and northwest and deposits formed by this ice are frequently called "gray drift." Soils associated with this drift were derived from sedimentary rock such as limestone and shale, therefore rocks included in this drift are comparatively soft and have a grayish to brown color. These soils typically contain a high percentage of shale and limestone particles. Generally, soil textures consist of plastic loam, clay loam and clay, with a brown to yellowish brown color near the surface where the iron in the soil has been oxidized or rusted. Such soils cover most of western and southern Minnesota.

It should be mentioned that not all deposits are distinctly reddish or gray colored, but may be complex mixtures of these types with a thin layer of one overlying the other where ice sheets have met. "Red and gray drift" soils have distinctive engineering characteristics, with the "Red drift" types being considerably more moisture sensitive and difficult to work at moisture contents above optimum.

Drift which has not been reworked or sorted in any manner (unstratified) will include a wide range of particle sizes (from boulders to clay) and is referred to as till. Thus, clay loams or sandy loams with pebbles and stones, known to be glacial origin may be termed clay loam till or sandy loam till. On the other hand, glacial soils reworked by water or wind are technically called stratified drift and this general classification would include the most common soil types such as clay, sand, clay loam, etc.

B. Glacial Landform Descriptions

Some of the more common types of glacial land forms are described below:

1. **Moraines** Deposits of unstratified glacial till dropped directly from the margins of the ice sheet as the ice melts in a relatively stagnant position. Wide ranges of soil types should be expected, but the most common types would be clay loam till, sandy loam till, etc. Sand, gravel and silt are frequently found interspersed with the more plastic soils and abrupt lateral textural changes can be expected. Drainage of such soil types is slow and water volumes are usually not great. Terminal and recessional moraines mark the farthest advance of an ice sheet or an intermediate stopping point in its retreat. In an ice sheet that maintains a relatively stagnant position, the rate of ice melting roughly equals the rate of ice advance and thus rather large quantities of soil carried by the ice are liberated. Such deposits are usually characterized by relatively high, rugged topography and lakes are common. Ground moraines or till plain are rolling to relatively flat features and form as the ice retreats uniformly or melts in a stagnant position.

2. **Drumlins** When an ice sheet moves over previously formed ground moraine, the older moraine may be remodeled into elongate "cigar shaped" ridges called drumlins, with the long axes paralleling the direction of ice movement. A group of drumlins may frequently be found clustered together in one area. Soil types will be the same as the parent moraine.

3. **Outwash** As the ice melted, streams carrying large sediment loads fanned out from the face of the ice sheet. As stream velocity decreased and coarser particles were dropped out, rather level to gently undulating outwash plains of stratified sand, gravel and sometimes silt, were deposited. A pitted outwash plain is formed when blocks of ice break off the main glacier, are buried and then later melt, forming depressions or kettles in the outwash. (Kettles may also form similarly in moraines.)

   Valley trains are outwashes confined to old drainage valleys. Outwash features will be primarily granular, with changes in texture taking place rather gradually both horizontally and vertically. Such features may cover broad areas or be confined to narrow bands, but in either form they are usually good sources of sand, gravel and water. Grades below the water table will be difficult to dewater because of the quantity of water present and the ease of recharge. Outwash deposits frequently rest on top of older till and are associated in origin with adjoining moraines. (Outwash and ice contact deposits that are formed by streams associated with glaciers are termed glaciofluvial.)

4. **Ice Contact Deposits**
   The following three types of deposits: kames, eskers, and collapse sediments, are frequently referred to by the general term ice contact deposit, that is, they form on, within or immediately adjacent to the ice sheet. Such features are usually granular, but can be distinguished from typical outwash by the following characteristics:

   a. extreme range and abrupt changes in grain size,

   b. included bodies or zones of till,

   c. marked deformation of bedding features and

   d. usually of rather limited extent.

      i. Kames These are knob like to irregular shaped isolated hills rising above the general terrain. Soils within the kame are crudely stratified gravel, sand and silt. Coarser sediments are typically located toward the center of the kame. Kames form where sediments are deposited by running water at the edge of an ice mass, in crevasses or in other openings on or in a stagnant or nearly stagnant ice mass. When the ice later melts away, the accumulated sediment remains in the form of isolated mounds. Kames and kettles are often found in close association.

      ii. Eskers One of the better known glacial topographic forms is the esker, which is a long, narrow, sinuous ridge, composed mostly of sand and gravel. Like all ice contact deposits, particle sizes range from boulders to very fine sand are common. Esker deposits may have formed in surface channels on the ice, but more likely they originate from filling of long crevasses or channels within or beneath the ice sheet. These old channels were frequently eroded below the level of the surrounding till and thus granular soils may likewise extend to some depth. Steeply inclined stratification on the flanks is not uncommon.

iii. Collapse Sediments These are basically stratified granular soils deposited on the surface of the ice flow by streams and let down onto the ground surface as the stagnant ice melted.

5. **Glacial Lakes** In front of the ice flow, lakes formed in surface depressions and these stagnant water bodies provided settling points for silts and clays (Sediments deposited in lakes fed by glacial melt water streams are termed glaciolacustrine.). Some of these lakes covered many square miles, with the largest and best known being Glacial Lake Agassiz, which covered a large part of northwestern Minnesota. Most of these lake clays are troublesome to the engineer because of their poor drainage characteristics, low strength parameters and associated stability problems.

   Clays compacted below optimum moisture may swell excessively. Smaller lake plains may be difficult to recognize because recent erosion may have significantly altered the originally flat topography. Granular beach ridges are commonly associated with the large glacial lakes and these beaches are frequently excellent sources of sand and gravel.

C. Wind Blown Deposits

1. **Loess** Silt size sediments blown about and redeposited by wind. Grains are angular and of about the same size (uniformly graded.) Cuts may stand vertically for some time; however, if left exposed they are susceptible to wind and water erosion. Silty soils are frost susceptible. Loess occurs predominantly in southeastern Minnesota and in a smaller area of extreme southwestern Minnesota.

2. **Dune Sand** Fine sand blown about and deposited by the wind. Exhibits a rather uniform grain size and individual grains have a dull or frosted appearance. As with most clean sands, stability under equipment may pose construction problem. Such formations are found in areas of Norman, Polk, Anoka, Chisago, Isanti, and Sherburne Counties and to a lesser degree in Mille Lacs, Ramsey and Hennepin Counties.

D. Recent Sediments

Modern or recent sediments are those soils deposited or formed since the last glacial period. These would include such features as flood plain sediments (alluvial), modern lake clays and beaches (lacustrine), and marl.

1. **Alluvial** Soils which have been deposited along a stream or river forming flood plains, terraces, bars, deltas and levees. The kind of material deposited normally depends in part upon the rate of water flow. When the current is rapid, heavier granular particles such as sand or gravel settle out forming granular bars or terraces. Finer grained silt and clay eventually are deposited when the water becomes less turbulent, often forming deltas and levees.

2. **Lacustrine** Fine grained sediments deposited in fresh water lakes which may or may not still be in existence. Wave action in lakes carry the finer grained silt and clay sized particles in suspension towards deeper water. As the water calms, these particles settle out and accumulate in the lake bed to form what is known as lacustrine soil. (As mentioned

earlier, many lacustrine sediments in Minnesota were formed in glacial lakes.) Old lake plains are frequently evidenced by a very flat topography.

3. **Peat Deposits**: Peat is the accumulation of organic debris in various stages of decay. Peat is considered to be a unsuitable material for road construction and is normally mixed with variable amounts of mineral soils. Peat normally accumulates in shallow water areas where drainage is poor.

4. **Marl**: Soil which is a white to light gray mixture of the mineral calcium carbonate and silt to clay. It forms in the bottom of lakes and swamps, mostly from calcium carbonate precipitating out of ground water, but sometimes from accumulations of shell fragments or chemical action of aquatic plants. Marl will bubble when treated with dilute hydrochloric acid and care should be taken not to confuse it with the fine, light gray sands sometimes found in the bottom of swamps. Marl is also an unsuitable material for roadway construction.

E. Gravity Deposits

These deposits are technically referred to as colluvium and would include such features as landslides, surface mud slides, talus etc. Although not particularly common in Minnesota and usually of rather limited extent, this type of deposit frequently indicates an unstable area or one susceptible to rock fall. These problem zones can usually be visually identified in the field, as they lie at the base of a hill or rock outcrop. Highly variable soil conditions can be expected.

F. Residual Soils

Residual deposits are those soils that develop in-place on top of the underlying bedrock from hundreds to thousands of years of weathering. In most areas, any residual soils developed on the rock surface were eroded during glacial time, but south of St. Cloud and in the Central part of the State, a variable mantle of white to gray to greenish clay and gritty quartz residue has developed and been preserved on top of the underlying igneous and metamorphic bedrock (This clay may look a little like marl, but it will not bubble if treated with acid.). Also, a small part of Southeastern Minnesota is believed to be essentially non glaciated (drift less area) and here a mantle of dark orange to brown to rusty colored clays been developed on top of the sedimentary dolostone bedrock. Engineering treatment of these clays would be similar to their glacial counterparts. In areas underlain by carbonate bedrock, sinkholes may form where the surface soils erode into solution cavities in the limestone or dolostone. Every effort must be made to seal the access to the cavity to prevent future roadway settlement.

In summary, geological deposits influence the character of the soils developed upon them. The history of geological formations is important to the transportation engineer in that it adds to his understanding of soil characteristics, values, and uses. Glacial drift deposits are usually the most complicated and troublesome to deal with in road construction. Because of the seemingly random nature of their deposition by the glaciers, soils can be quite non uniform and unpredictable. Unweathered parent, or "C" horizon material for instance, may have many abrupt changes in soil texture such as pocketed gravel, sand and silt clay materials. Such sharp variations are the most common cause for differential or non uniform frost heaving. On the other hand, glacial drift furnishes a large percentage of the aggregates needed for construction. Loessial silts and lacustrine clays are also troublesome materials to work with on road construction due to their affinity for capillary water and swell characteristics and their potential for frost heaving and thaw weakening.

Additional information on Minnesota's geology is available in the Geotechnical and Pavement Manual.

5-692.630. Soil Selection

Soils selection provides the means for utilizing the knowledge of soils and the principles discussed in the preceding sections. In making preliminary soil surveys for design, the principal objective is to discover what soil materials and moisture conditions may be encountered along the proposed grade line. Representative samples are selected and tested in the laboratory to evaluate the soils on the basis of their engineering properties. That information is then applied to the project design to provide for a stable and uniform grade.

Stated simply, the purpose behind the application of the soils data to the design of a grading project is to make use of the better soils where they will do the most good, dispose of the poorer soils where they will have the least detrimental effect upon the finished road and to blend non uniform soils into a more uniform mass.

The effectiveness and success of that principle depends to a large extent upon the knowledge and diligence of the inspector in seeing that the intent of the plans is carried out. To accomplish this he must have and understand the project soils profile. The soils profile will show the original ground line to which the soils borings will be referenced and the grading profile line to which the project will be built. Normally soils will be removed (subcut) under all portions of the roadway under construction so the structure will have a good foundation. The reasons for removals are as follows:

Topsoil Removal:

To remove organic materials which are moisture susceptible and compressible.

Compaction Subcut:

In-place materials are acceptable for strength but may not have uniformity or adequate density. Soils removed can be used on the project.

Subgrade Correction or Excavation:

The in-place soils are not acceptable because of a deficiency in engineering properties or because the soils are non-uniform. Two methods of correction are possible, one is to remove the unsuitable soils and replace them with suitable materials and second is to upgrade the inplace soils by blending for more uniformity, reducing or increasing moisture contents to desired levels. Granular materials are used to replace unsuitable soils in a non-granular soil grade when in addition to unsuitable soils subgrade moisture problems also exist.

In design a uniform subcut depth should be maintained wherever possible. When subcut depths have to be varied, 20 to 1 tapers should be provided at both ends. These tapers will allow for relatively smooth transitions.

Soil borings are normally taken on 30 meter (100 feet) intervals and may be taken many years in advance of construction. Therefore, soil conditions and water levels found during construction may differ substantially over short areas from those shown on the profile.

For example, in grading through a cut section, it is entirely possible that pockets of detrimental silty material may be encountered not shown on the soils profile. These pockets should be removed during construction and the excavations filled with more suitable material. Poor soil placed in the upper portion of the embankment may cause premature failure.

The grading inspector's duty is to insure the actual construction meets the intent of the plan and specifications. Therefore, if marked differences do occur, materials or construction limits can and should be altered.

5-692.700- Formulas and Computations

5-692.702. Computing Stabilized Gravel Mixture 167
5-692.703. Computation of Quantities for Base Construction 167
5-692.704. Determining Quantities (per mile) for Base Construction Ingredients..... 168
5-692.705. Procedures for "Rounding Off" 170
A. General 170
B. General Round Off Rules 170
C. Application of Rounding Off Rules 171
5-692.706 English-Metric Equivalent Gradation Sieve Sizes 172

5-692.702. Computing Stabilized Gravel Mixture

5-692.700-Table 21. Computing Stabilized Gravel Mixture

Percent Passing Sieve	1”	3/4”	3/8”	No. 4	No. 10	No. 40	No. 200
Original Gravel	85	80	75	60	50	20	2
Screened Gravel (Oversized Removed)	100	94	88	74	59	24	2.4
Oversize Gravel Crushed	100	90	70	30	10	2	---
Recombining:							
85% Screened Gravel	85	80	75	60	50	20	2
15% Crushed Oversize	15	13	11	5	2	---	---
Recombined Gravel	100	93	86	65	52	20	2
Binder Soil	100	100	100	100	100	80	50
Computation of Mixture:							
90% Gravel	90	84	77	59	47	18	1.8
10% Binder Soil	10	10	10	10	10	8	5.0
Mixture	100	94	87	69	57	26	6.8
Allowable Spec. Range	100	90-100	50-90	35-80	20-65	10-35	3-10

5-692.703. Computation of Quantities for Base Construction

The total quantities of dry base required per mile of roadway may be calculated by multiplying the cubic yards of compacted dry material required by the dry density (lbs/ft^3) of the compacted base.

Example:
Depth of base = 6 in.
Average width of base = 30 ft.
Dry density of compact base = 140 lbs/ft^3

One sq. yd. of base one inch thick requires:

$$\frac{140 lbs}{ft^3} \times \frac{3\,ft\ (wide)}{yd} \times \frac{3\,ft\ (long)}{yd} \times \frac{ft}{12 inches} = \frac{140 \times 3 \times 3}{12} = \frac{1{,}260}{12} = 105\ lbs / yd^2\ per\ inch$$

$$\frac{5{,}280\ ft}{mile} \times \frac{30\ ft}{1} \times \frac{yd^2}{(3\,ft)^2} = \frac{5{,}280 \times 30}{3 \times 3} = \frac{158{,}400}{9} = 17{,}600\, yd^2 / mile$$

One mile of base 6 inches thick requires:

$$\frac{17{,}600\,yd^2}{1} \times \frac{105\,lbs}{yd^2 \times in} \times \frac{6\,inch\ (thick)}{1} \times \frac{ton}{2{,}000\,lbs} = \frac{17{,}600 \times 105 \times 6}{2{,}000} = \frac{11{,}088{,}000}{2{,}000} = 5{,}544\ tons$$

To correct for moisture contained in the base multiple the weight of base by percent moisture and add it to the weight of dry material required.

Example:

% moisture of dry weight = 3.5%

Wt. of moist aggregate = $5{,}544 + \frac{5{,}544 \times 3.5}{100} = 5{,}738\,tons$

5-692.704. Determining Quantities (per mile) for Base Construction Ingredients
Assume 90% gravel and 10% binder soil.

1. Gravel
   5,544 x 0.9 = 4,990 tons of dry gravel

Average moisture content of gravel from pits is approximately 3.5%.

Weight of moist gravel as taken from pit = 4,900 x 1.035 = 5,164 tons.

One cubic yard (yd^3) of moist gravel loaded in truck may be assumed to contain 2,800 lbs. or 1.4 ton of dry gravel.

Volume of gravel = $\frac{4{,}990}{1.4} = 3{,}564\,yd^3$

2. Binder soil

5,544 x 0.10 = 554.4 tons of dry binder. To convert to cubic yards for volumetric measurement:

Average binder soil loaded in truck may be assumed to contain 1,900 lb. or 0.95 tons of dry material in one cubic yard.

$$\frac{554.4}{0.95} = 584\,yd^3$$

3. Find water for compaction (gallons).

Assume water weighs 8.3 lbs/gallon, mixture contains 4% water. Optimum moisture content for mixture is 8%.

Required additional moisture is 4% (0.04).

One ton (2,000 lbs) of dry mixture requires:

$$\frac{1 ton\ dry\ mix}{1} \times \frac{2{,}000 lbs}{ton} \times 0.04 \left(\frac{weight\ of\ water}{weight\ of\ dry\ mix} \right) = 2{,}000 \times 0.04 = 80 lbs\ water / ton\ dry\ mix$$

$$\frac{80 lbs\ water}{ton\ dry\ mix} \times \frac{1\ gallon\ of\ water}{8.3\ lbs\ of\ water} = 9.6 gallons\ water / ton\ dry\ mix$$

One mile requires:

$$\frac{9.6\ gallons\ water}{ton\ dry\ mix} \times \frac{5{,}544\ ton\ dry\ mix}{mile} = 9.6 \times 5{,}544 = 53{,}222\ gallons\ water\ /\ mile$$

The designed gradation of the stabilized mixture is based upon the average gradation of gravel and binder soil which are expected to be produced from the designated sources. If, when production of material for construction has been started, it is found that the actual gradation of gravel varies from that assumed in design, some adjustment of proportions may be necessary.

In making field adjustments of proportions, the following formula may be helpful:

$$A = \frac{P - C}{B - C} \times 100\%$$

Where:

A = percent of binder soil in mix.
B = percent of binder soil which passes certain sieve size.
C = percent of gravel which passes certain sieve size.
P = desired percent of stabilized mixture passing certain sieve size.

Examples:

1. If, in the previous example of design of a stabilized mixture, it is desired to maintain 26% passing the No. 40 sieve and the gravel has 22% passing the No. 40, the formula could be applied as follows:

$$A = \frac{26 - 22}{80 - 22} \times 100 = \frac{4}{58} \times 100 = 0.0698 \times 100 = 6.9\%$$

Therefore: Only 6.9% of binder soil would have to be added.

2. This formula, expressed in a different form, may also be used to determine what variation in gradation of gravel on a certain sieve size is allowable if the percentage of binder soil remains constant. For this purpose the formula is expressed as follows:

$$C = \frac{100 \times P - A \times B}{100 - A}$$

If the specifications require from 5% to 10% passing the No. 200 sieve for the stabilized mixture and 10% of binder soil containing 50% passing the No. 200 sieve were specified, then the maximum allowable percentage of gravel passing a No. 200 sieve could be determined as follows:

$$C = \frac{(100 \times 10) - (10 \times 50)}{100 - 10} = \frac{1{,}000 - 500}{90} = \frac{500}{90} = 5.5\%$$

Therefore:

5.5% passing the No. 200 sieve is the maximum allowable for the gravel material.

5-692.705. Procedures for "Rounding Off"

A. General

To "round off" a numerical value is to reduce the number of recorded figures to some predetermined point by dropping figures or by increasing the value of certain figures. For example, a computed, observed, or accumulated value such as 4,738,221 can be rounded off to the nearest million (5,000,000); to the nearest hundred thousand (4,700,000); to the nearest ten thousand (4,740,000); etc. Similarly, a value such as 47.382 can be rounded off to two decimal places (47.38); to one decimal place (47.4); to the nearest whole number or units place (47); etc.

B. General Round Off Rules

1. When the figure next beyond the last figure or place to be retained is less than 5, the figure in the last place retained is unchanged. (4,738,221 rounded off to the nearest hundred thousand is 4,700,000 and 47.382 rounded to two decimal places is 47.38)

2. When the figure next beyond the last figure or place to be retained is greater than 5, the figure in the last place retained is increased by 1 (4,738,221 rounded to the nearest million is 5,000,000 and 47.382 rounded to one decimal place is 47.4)

3. When the figure next beyond the last figure to be retained is 5 followed by any figures other than zero(s), the figure in the last place retained is increased by 1 (4,500,001 rounded to the nearest million is 5,000,000 and 4.6501 rounded to one decimal place is 4.7

4. When the figure next beyond the last figure to be retained is 5 followed by only zeros, the figure in the last place to be retained is left unchanged if it is even (0,2,4,6 or 8) or is increased by 1 if it is odd (1,3,5,7 or 9). When rounded to the nearest million 4,500,000 is

4,000,000; 5,500,000 is 6,000,000. When rounded to one decimal point 4.25 is 4.2; 4.15 is 4.2; 47.05 is 47.0 and 47.95 is 48.0.

5. Any number required to be rounded off shall be rounded off in one step, not by a series of rounding operations. For example, 47.3499 rounded to one decimal place is 47.3 not 47.4, which is the result if 47.3499 is rounded to 2 decimal places (47.35) and then rounded to 1 decimal place (47.4).

C. Application of Rounding Off Rules

1. Reading indications on graduated scales such as found on balances, gauges and dials.

   a. When the indicator is between two graduations, read the value of the closest graduation.

   b. When the indicator is midway between graduations, read the value of the "even" graduation, (if the indicator is midway between 9.8 and 9.9 read 9.8; if the indicator is midway between 9.9 and 10.0 read 10.0).

   c. A special case exists when the graduations of all have even values. When the indicator is midway between 2 "even" graduations, read the intermediate or "odd" value (if the pointer on a Speedy moisture dial is midway between 10.6 and 10.8, read 10.7).

2. Rounding off to the nearest 50, 5, 0.5, 0.05, etc.

To round a number to the nearest 50, 5, 0.5, 0.05, etc. double the observed or calculated value, round the product to the nearest 100, 10, 1.0, 0.10, etc. in accordance with the rules in part B above and divide the rounded product by 2. (6025 rounded to the nearest 50 is 12,050 rounded to the nearest 1000 which is 12,000 and 12,000 divided by 2 is 6,000.)

3. Rounding common fractions

When rounding common fractions, the rules are applied to the numerators of the fractions which are reduced to a common denominator. The observed fraction is compared to the fraction "rounded to" and the remainder is dropped if it is less than ½ of the fraction "rounded to" and increased if it is more than ½ of the fraction "rounded to"; if the remainder is exactly ½ of the fraction "rounded to" the odd even rules are used. Consider the following examples:

4. Rounding to the nearest eighth (4/32):

- 1 1/32 becomes 1 because 1/32 is less than ½ of 4/32 and is dropped.

- 1 2/32 becomes 1 because 2/32 is exactly ½ of 4/32, the 2/32 is dropped because the numerator of the preceding eighth (0/8) is even.

- 1 3/32 becomes 1 4/32 or 1 1/8 because 3/32 is more than ½ of 4/32, therefore the fraction is increased or "rounded up" to the next eighth.

- 1 5/32 becomes 1 4/32 or 1 1/8 because 5/32 is 1/32 more than 4/32, 1/32 is less than ½ of 4/32 and therefore is dropped.

- 1 6/32 becomes 1 2/8 or 1-1/4 because 6/32 is 2/32 more than 4/32 and the numerator of the preceding eighth (1/8) is odd, therefore the fraction is increased to the next eighth.
- 1 7/32 becomes 1 2/8 or 1-1/4 because 7/32 is 3/32 more than 4/32 or an exact 1/8 and 3/32 is more than ½ of 4/32, therefore the fraction is increased to 2/8 or “rounded up”.

- 1 10/32 becomes 1 2/8 or 1-1/4 because 10/32 is 2/32 more than 8/32 or an exact 2/8, 2/32 is ½ of 4/32, the numerator of the preceding eighth (2/8) is even, therefore the 2/32 is dropped or "rounded down".

5-692.706 English-Metric Equivalent Gradation Sieve Sizes

English	Metric
3-inch	75.0 mm
2-inch	50.0 mm
1-1/2-inch	37.5 mm
1-1/4-inch	31.5 mm
1-inch	25.0 mm
3/4-inch	19.0 mm
5/8-inch	16.0 mm
1/2-inch	12.5 mm
3/8-inch	9.5 mm
#4	4.75 mm
#8	2.38 mm
#10	2.00 mm
#16	1.19 mm
#20	850 μm
#30	600 μm
#40	425 μm
#50	300 μm
#80	180 μm
#100	150 μm
#200	75 μm