Minnesota Department of Transportation

Office of Materials & Road Research

1400 Gervais Avenue, Maplewood, MN 55109

Date: October 17, 2019

To: Michael Manning, Freeway Systems Design Project Manager

Metro District

From: Jason Hedeen, Engineer 2 Graduate

Geotechnical Engineering Section

Jason Hedeen Digitally signed by Jason Hedeen Date: 2019.10.17 09:18:32 -05'00'

Concur: Rich Lamb, Foundations Engineer

Geotechnical Engineering Section

RAL

Subject: S.P. 8816-2627, construct three (3) new Overhead Dynamic Message Signs; TH494 (1) Dakota County, TH10 (2) TH Sherburne County

Foundation Investigation and Recommendations

1.0 Project Description

This report provides a foundation investigation and recommendations for three (3) Overhead Dynamic Message Signs (DMS): OH I494-510 (sign bride) over EB TH494 in Dakota County; OH US10-115 (cantilever) over EB TH10 in Sherburne County; OH US10-116 (cantilever) over EB TH10 in Sherburne County.

2.0 Field Investigation and Foundation Conditions

In August and October of 2019 a MnDOT field crew conducted three (3) Cone Penetration Test (CPT) soundings targeting 50-foot exploration depth. Soundings c02 and c03a were conducted at the support locations of US10-115 and US10-116, respectively. Sounding c01 was advanced near the location of the southern support of OH I494-510. Because of construction activity in the area, drill crews were unable to access the median to advance a sounding for the northern support of OH I494-510. Copies of the CPT Soundings mentioned above, as well as, as exhibits/maps that indicate the locations of the CPT soundings advanced are attached at the end of this report.

The CPT soundings were interpreted for general soil behavior type. No soil samples were taken. The interpreted soil behavior type may not exactly match the soil that is present, but should indicate how it behaves if compared to standard soils. “Undefined” under interpreted soil behavior type means that the CPT programming was unable to determine a soil behavior type based on the available parameters.

Interpretation of site soils:

OH I-494-510:

Soils encountered at the location of the southern support of OH I494-510 (sounding c01) consist of interbedded layers of medium dense to very stiff sand and clay to a depth around 20 feet, followed by clayey silt to silty clay until the sounding terminates at roughly 50' below existing surface. The sounding indicates pore water pressure readings starting at five feet below surface and given alternating beds of granular soil, it is anticipated that these layers are water-bearing.

OH US10-115:

Soils encountered at the location of the support of OH US10-115 (sounding c02) consist of dense to medium dense clean to silty sands from 3' to 50' below surface. At the time the sounding was taken, a clear indication of the phreatic surface of groundwater was indicated at roughly 15 feet below surface.

OH US10-116:

Soils encountered at the location of the support of OH US10-116 (sounding c03a), were very similar to those at location US10-115. Soils consist of dense to medium dense clean to silty sands to significant depth (~50 below surface). At the time the sounding was advanced no clear indication of the phreatic surface of groundwater was detected, although the Contractor should anticipate groundwater as shallow as 10'.

3.0 Foundation Analysis

As part of the overhead sign standard drawings (revised 5-28-2019), standard foundations were developed to support overhead signs. These standard foundations consist of two spread footing and two drilled shaft designs to be used on different sign pole sizes (see drawing 5-297.763, Standard Overhead Sign Structures – Design D).

Analysis was conducted by interpreting the exploration logs and comparing the soils encountered at each site with the minimum requirements stipulated under the Soil Parameters section of Standard Plan 5-297.763. Our analysis concluded that each of these sites meet the criteria necessary for the Standard Design provided using the Post Type stipulated by the MnDOT Bridge Office.

The recommendations contained in the paragraphs below are based on our analysis. In order to avoid encroachment on existing roadway on TH10 and existing spread footing of OH I494-405 in the center median of I494, we recommend the new foundations consist of drilled shafts. These drill shaft foundations shall be designed to meet the requirements of the current standard design tables.

Due to the indication of granular soils with the presence of groundwater, the Contractor should expect to encounter collapsible conditions and inflow of groundwater while drilling and installing foundations. Unless proper construction techniques are used, it is likely this inflow of groundwater will cause loss of ground and instability. It is strongly recommended the Contractor use methods to mitigate these conditions during construction.

4.0 Recommendations

1. The proposed overhead sign structures be supported by drilled shaft foundations as detailed in the attached Standard Overhead Sign Supports, Sheet 5-297.763.
2. The use of temporary casing may be necessary to improve stability and safety at the surface.
3. The possible use of drilling fluid or additional casing to reduce the infiltration of groundwater and loss of ground that would cause settlement and instability. Note that pumping, retention and disposal of drilling fluid and cuttings will be necessary.
4. This office should be contacted if soils differ than those described in this report are encountered during construction of the sign foundations.
5. Make this recommendations report available to the potential contractors at the time of Contract Advertisement.

If you have any questions regarding our recommendations, or require further assistance, please contact this office.

Attachments:
Exploration Layout Drawing/Map
CPT Index Sheet
CPT Logs c01[#84351], c02[#84352], and c03a[#84554]
Standard Overhead Sign Structures Design D 5-297.763

CC: Brad Skow, Chief Geotechnical Engineer

Rich Lamb, Foundations Engineer

Jihshya Lin, MnDOT Bridge Office

Foundations Investigation Exhibit

OH I494-510

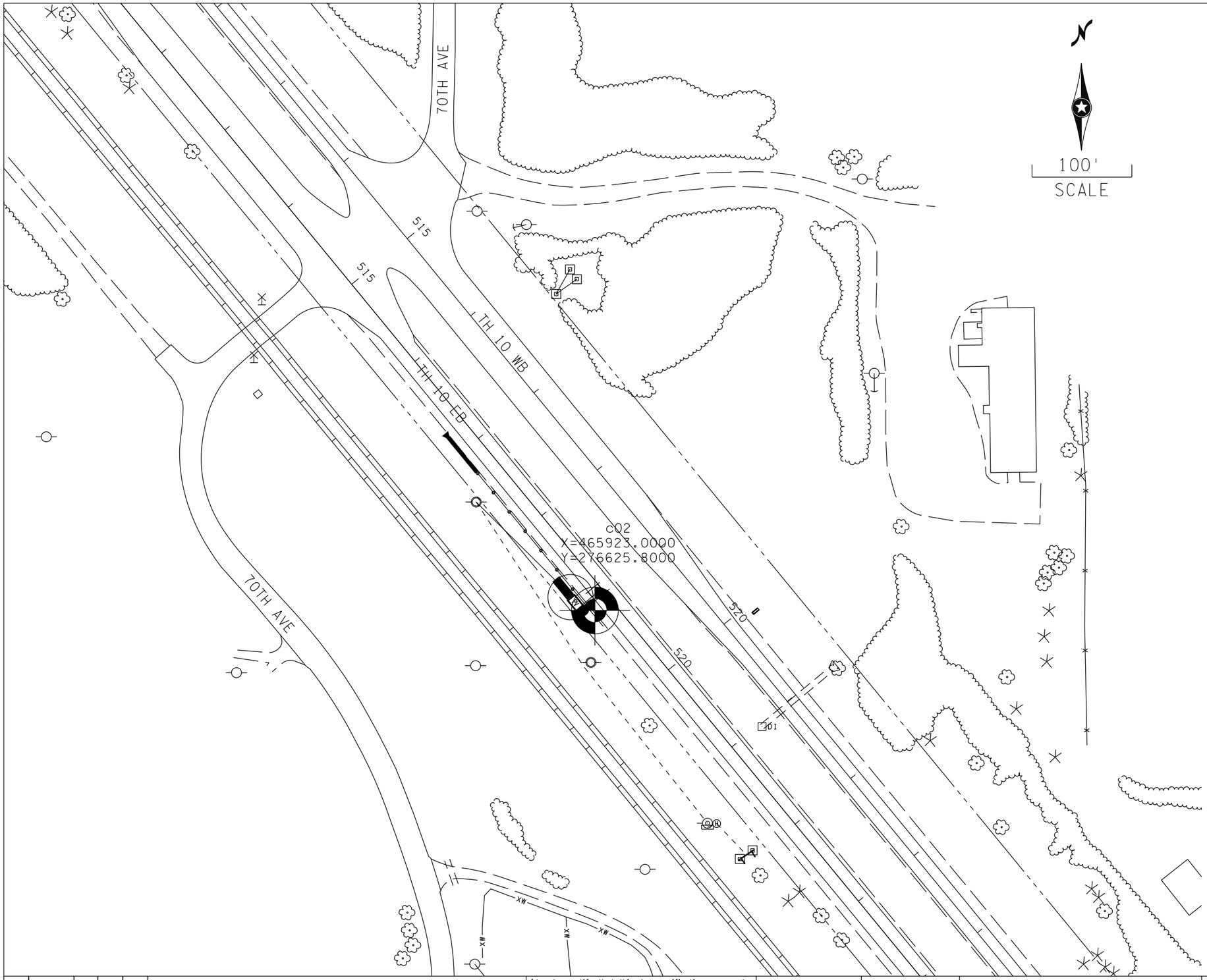

OH US10-115

NO	DATE	BY	CKD	APPR	REVISION

I hereby certify that this plan, specification, or report was prepared by me or under my direct supervision and that I am a duly Licensed Professional Engineer under the laws of the State of Minnesota.

Print Name: _____

Date _____ License # _____

STATE PROJ. NO.
SP 8816-2627

MINNESOTA DEPARTMENT OF TRANSPORTATION

2019 METRO-D3-D4 DMS REPLACEMENTS
FOUNDATIONS INVESTIAGATION EXHIBIT
NOT TO SCALE

$TIME$
$DATE$
$FILE$

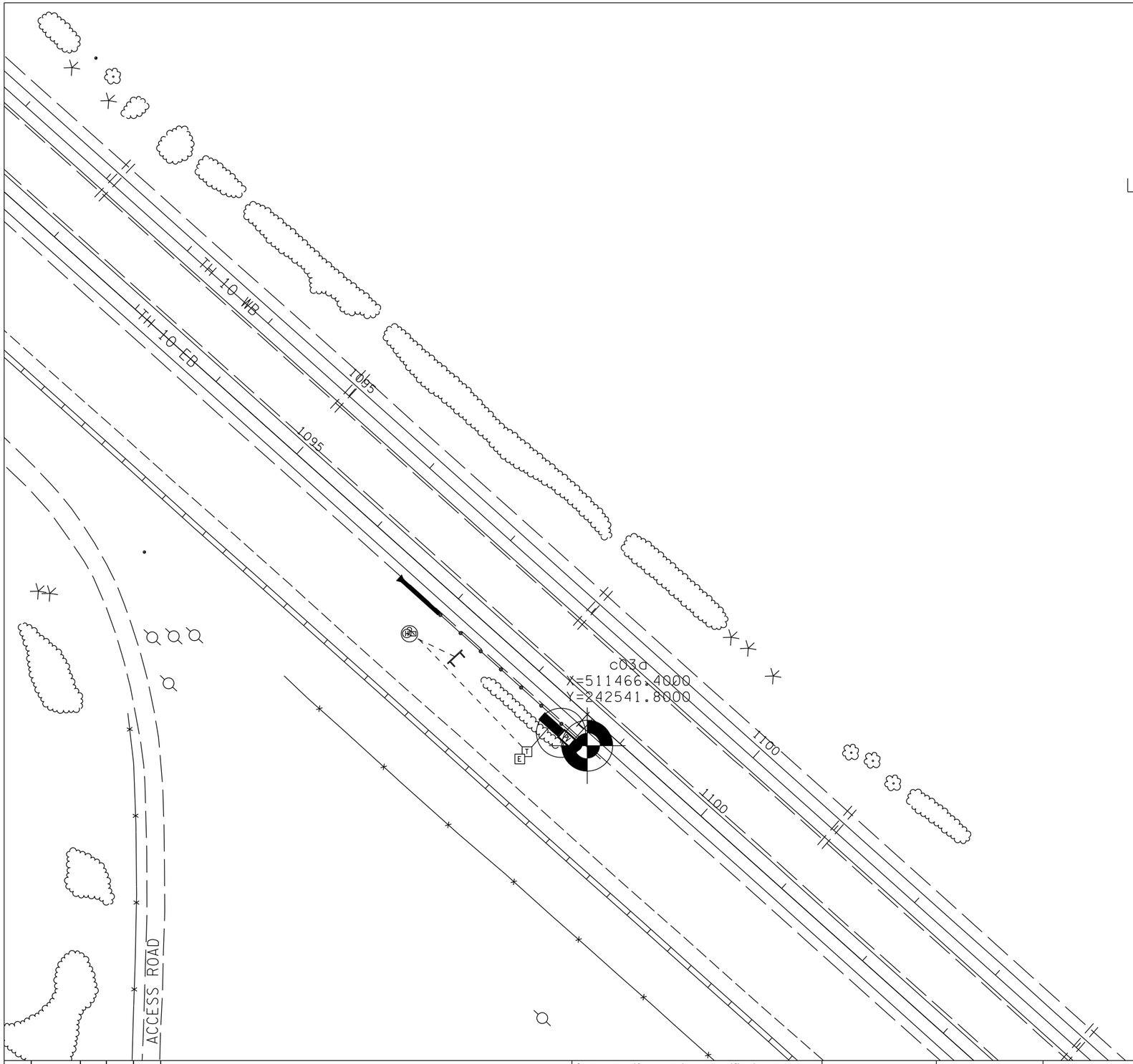

N

100'
SCALE

OH US10-116

$TIME$

$DATE$

$FILE$

NO	DATE	BY	CKD	APPR	REVISION

I hereby certify that this plan, specification, or report was prepared by me or under my direct supervision and that I am a duly Licensed Professional Engineer under the laws of the State of Minnesota.

Print Name: _____

Date _____ License # _____

STATE PROJ. NO.
SP 8816-2627

MINNESOTA DEPARTMENT OF TRANSPORTATION

2019 METRO-D3-D4 DMS REPLACEMENTS
FOUNDATIONS INVESTIGATION EHIBIT
NOT TO SCALE

Minnesota Department of Transportation
Geotechnical Section
Cone Penetration Test Index Sheet 1.0 (CPT 1.0)

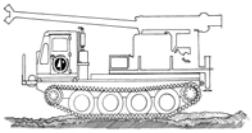

USER NOTES, ABBREVIATIONS AND DEFINITIONS

This Index sheet accompanies Cone Penetration Test Data. Please refer to the Boring Log Descriptive Terminology Sheet for information relevant to conventional boring logs.

This Cone Penetration Test (CPT) Sounding follows ASTM D 5778 and was made by ordinary and conventional methods and with care deemed adequate for the Department's design purposes. Since this sounding was not taken to gather information relating to the construction of the project, the data noted in the field and recorded may not necessarily be the same as that which a contractor would desire. While the Department believes that the information as to the conditions and materials reported is accurate, it does not warrant that the information is necessarily complete. This information has been edited or abridged and may not reveal all the information which might be useful or of interest to the contractor. Consequently, the Department will make available at its offices, the field logs relating to this sounding.

Since subsurface conditions outside each CPT Sounding are unknown, and soil, rock and water conditions cannot be relied upon to be consistent or uniform, no warrant is made that conditions adjacent to this sounding will necessarily be the same as or similar to those shown on this log. Furthermore, the Department will not be responsible for any interpretations, assumptions, projections or interpolations made by contractors, or other users of this log.

Water pressure measurements and subsequent interpreted water levels shown on this log should be used with discretion since they represent dynamic conditions. Dynamic Pore water pressure measurements may deviate substantially from hydrostatic conditions, especially in cohesive soils. In cohesive soils, water pressures often take extended periods of time to reach equilibrium and thus reflect their true field level. Water levels can be expected to vary both seasonally and yearly. The absence of notations on this log regarding water does not necessarily mean that this boring was dry or that the contractor will not encounter subsurface water during the course of construction.

CPT Terminology

CPT ..... Cone Penetration Test
CPTU..... Cone Penetration Test with Pore Pressure measurements
SCPTU..... Cone Penetration Test with Pore Pressure and Seismic measurements
Piezocone...Common name for CPTU test

(Note: This test is not related to the Dynamic Cone Penetrometer DCP)

q_T TIP RESISTANCE

The resistance at the cone corrected for water pressure. Data is from cone with 60 degree apex angle and a 10 cm^2 end area.

f_s SLEEVE FRICTION RESISTANCE

The resistance along the sleeve of the penetrometer.

FR Friction Ratio

Ratio of sleeve friction over corrected tip resistance.
FR = fs/qt

V_s Shear Wave Velocity

A measure of the speed at which a siesmic wave travels through soil/rock.

PORE WATER MEASUREMENTS

Pore water measurements reported on CPT Log are representative of water pressures measured at the U2 location, just behind the cone tip, prior to the sleeve, as shown in the figure below. These measurements are considered to be dynamic water pressures due to the local disturbance caused by the cone tip. Dynamic water pressure decay and Static water pressure measurements are reported on a Pore Water Pressure Dissipation Graph.

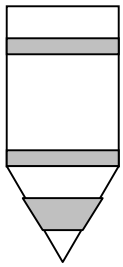

SBT SOIL BEHAVIOR TYPE

Soil Classification methods for the Cone Penetration Test are based on correlation charts developed from observations of CPT data and conventional borings. Please note that these classification charts are meant to provide a guide to Soil Behavior Type and should not be used to infer a soil classification based on grain size distribution.

The numbers corresponding to different regions on the charts represent the following soil behavior types:

1. Sensitive, Fine Grained
2. Organic Soils - Peats
3. Clays - Clay to Silty Clay
4. Silt Mixtures - Clayey Silt to Silty Clay
5. Sand Mixtures - Silty Sand to Sandy Silt
6. Sands - Clean Sand to Silty Sand
7. Gravelly Sand to Sand
8. Very Stiff Sand to Clayey Sand
9. Very Stiff, Fine Grained

Note that engineering judgment, and comparison with conventional borings is especially important in the proper interpretation of CPT data in certain geo-materials.

The following charts are used to provide a Soil Behavior Type for the CPT Data.

Robertson CPT 1990
Soil Behavior type based on friction ratio

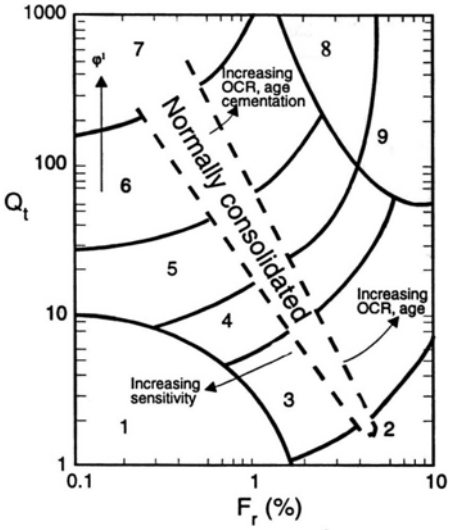

$$Q_t = \frac{q_t - \sigma_{vo}}{\sigma'_{vo}} \qquad F_r = \frac{f_s}{q_t - \sigma_{vo}} \times 100\%$$

Robertson CPTU 1990
Soil Behavior type based on pore pressure

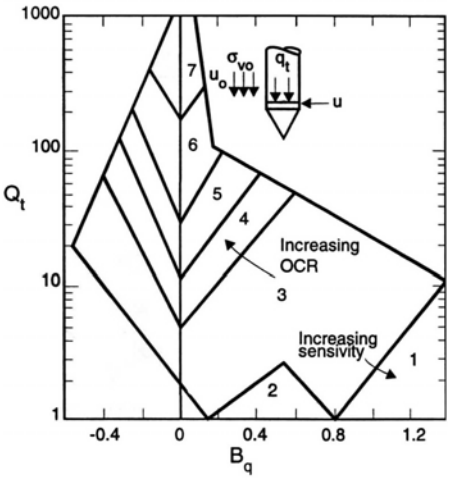

$$Q_t = \frac{q_t - \sigma_{vo}}{\sigma'_{vo}} \qquad B_q = \frac{u_2 - u_o}{q_t - \sigma_{vo}}$$

where ...

Q_T..... normalized cone resistance
B_q ..... pore pressure ratio
F_r ..... Normalized friction ratio
σ_{vo} ..... overburden pressure
σ'_{vo} ..... effective over burden pressure
u_2 ..... measured pore pressure
u_0 ..... equilibrium pore pressure

G:\GEOTECH\PUBLIC\FORMS\CPTINDEX.DOC January 30, 2002

DEPARTMENT OF TRANSPORTATION

MINNESOTA DEPARTMENT OF TRANSPORTATION - GEOTECHNICAL SECTION

CONE PENETRATION TEST RESULTS

UNIQUE NUMBER 84351

State Project	Bridge No. or Job Desc.	Trunk Highway/Location	Sounding No.	Ground Elevation
8816-2627	**LIGHTING BASE**		**C01**	**884.6** *(DTM)*

Location Dakota County Coordinate System	*CPT Machine* **203094 CPT Truck**	*SHEET 1 of 1*
X=552118 Y=242394	*CPT Operator* **Buhl**	*Date Completed*
Latitude (North)=44°51'44.35" *Longitude (West)=93°06'56.46"*	*Hole Type* **CPT-STD**	**8/20/19**

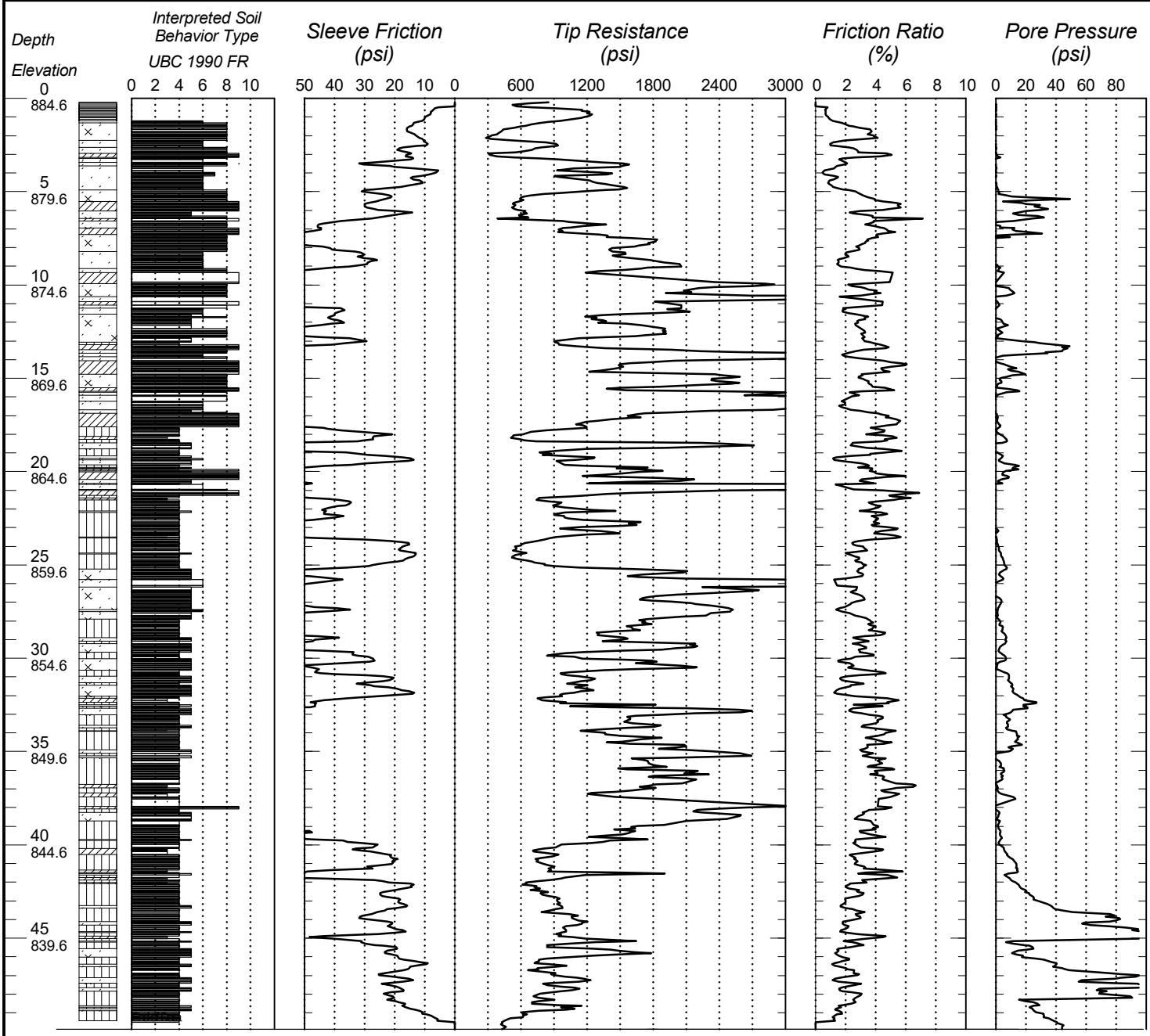

Bottom of Hole 49.87

G:\GINT\PROJECTS-ACTIVE\8816-2627 TMS SIGNS.GPJ

DEPARTMENT OF TRANSPORTATION

MINNESOTA DEPARTMENT OF TRANSPORTATION - GEOTECHNICAL SECTION

CONE PENETRATION TEST RESULTS

UNIQUE NUMBER 84352

State Project	Bridge No. or Job Desc.	Trunk Highway/Location	Sounding No.	Ground Elevation
8816-2627	**LIGHTING BASE**		**C02**	**993.2** *(DTM)*

Location Sherburne County Coordinate System	*CPT Machine* **203094 CPT Truck**	*SHEET 1 of 1*
X=465923 Y=276626	*CPT Operator* **Buhl**	*Date Completed*
Latitude (North)=45°27'42.53" *Longitude (West)=94°00'58.07"*	*Hole Type* **CPT-STD**	**8/22/19**

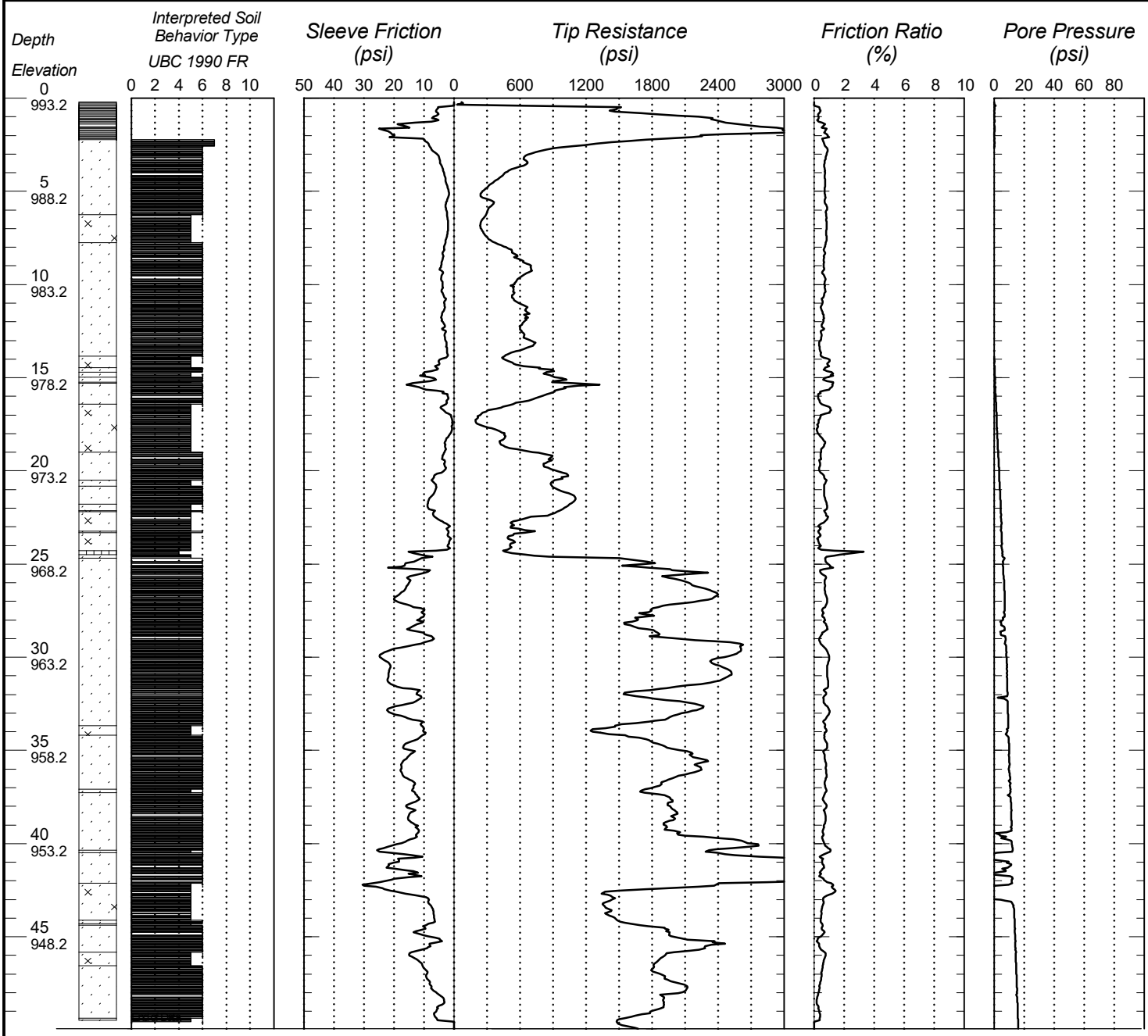

Bottom of Hole 49.94

G:\GINT\PROJECTS-ACTIVE\8816-2627 TMS SIGNS.GPJ

DEPARTMENT OF TRANSPORTATION

MINNESOTA DEPARTMENT OF TRANSPORTATION - GEOTECHNICAL SECTION

CONE PENETRATION TEST RESULTS

UNIQUE NUMBER 84554

State Project	Bridge No. or Job Desc.	Trunk Highway/Location	Sounding No.	Ground Elevation
8816-2627	**LIGHTING BASE**	**TH 10**	**C03A**	**961.4** *(DTM)*

Location Sherburne County Coordinate System	*CPT Machine* **205146 CPT Truck (H)**	*SHEET 1 of 1*
X=511466 Y=242542	*CPT Operator* **Buhl**	*Date Completed*
Latitude (North)=45°22'06.28" *Longitude (West)=93°50'19.4"*	*Hole Type* **CPT-STD**	**10/2/19**

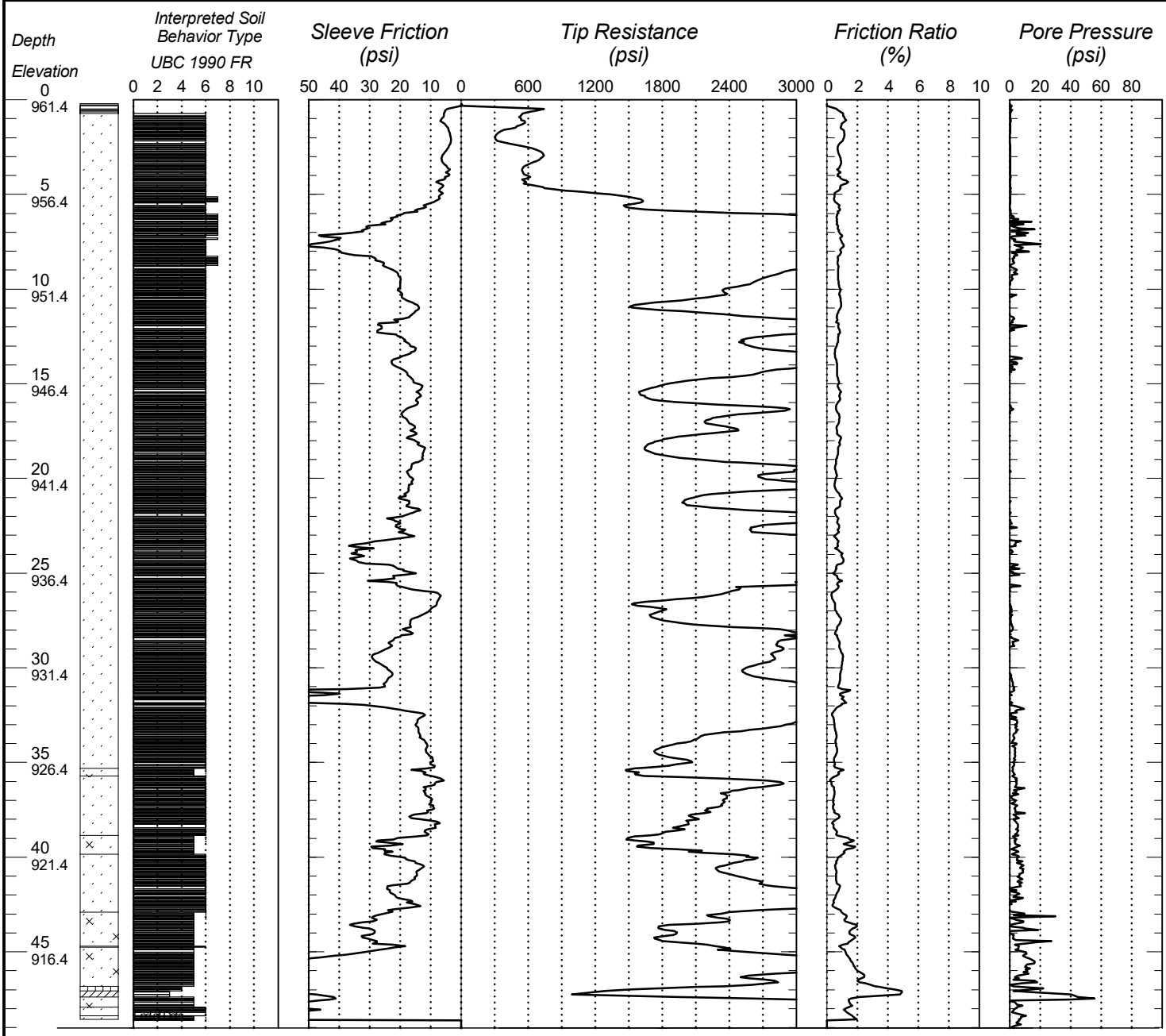

Bottom of Hole 49.02

G:\GINT\PROJECTS-ACTIVE\8816-2627 TMS SIGNS.GPJ

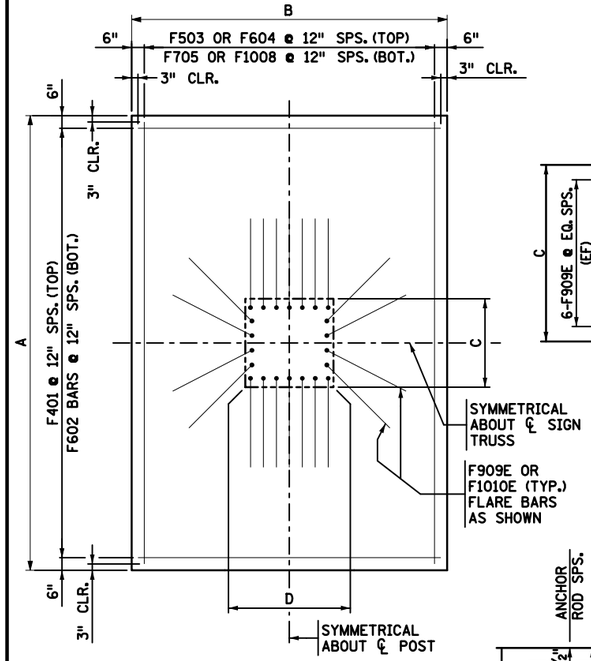

SPREAD FOOTING PLAN

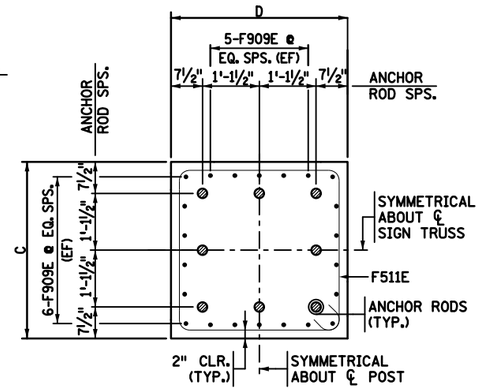

POST TYPE 1 THRU 4

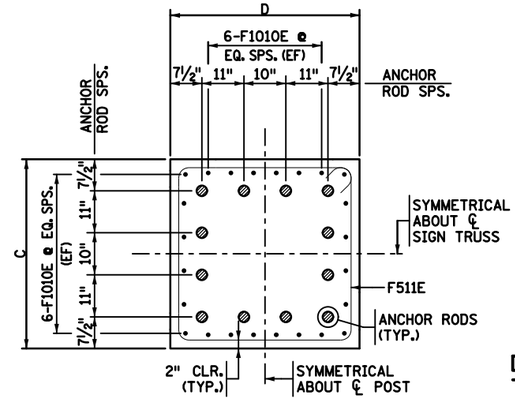

POST TYPE 5 THRU 6

SPREAD FOOTING SECTION A-A

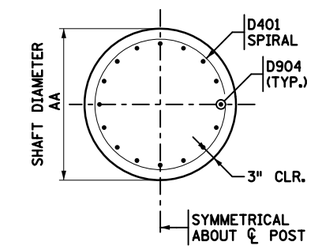

DRILLED SHAFT SECTION C-C

(SECTION FOR POST TYPE 1-4 SHOWN)
(SECTION FOR POST TYPE 5-6 SIMILAR)

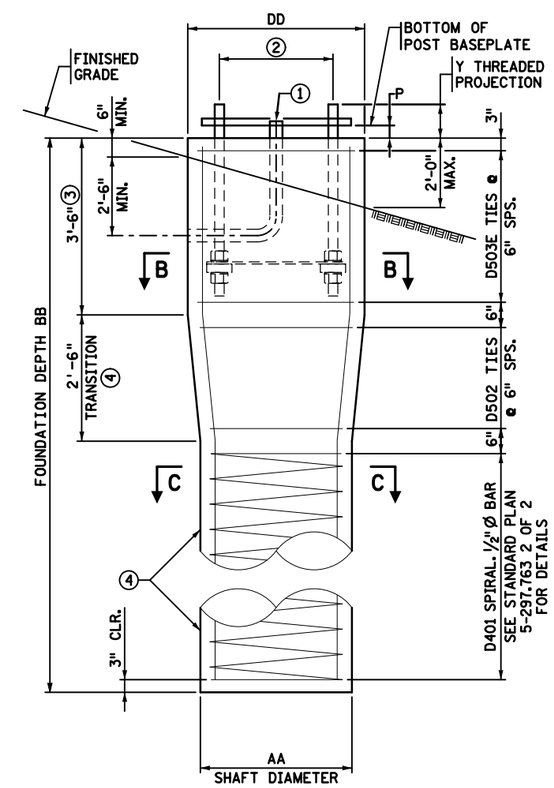

DRILLED SHAFT ELEVATION

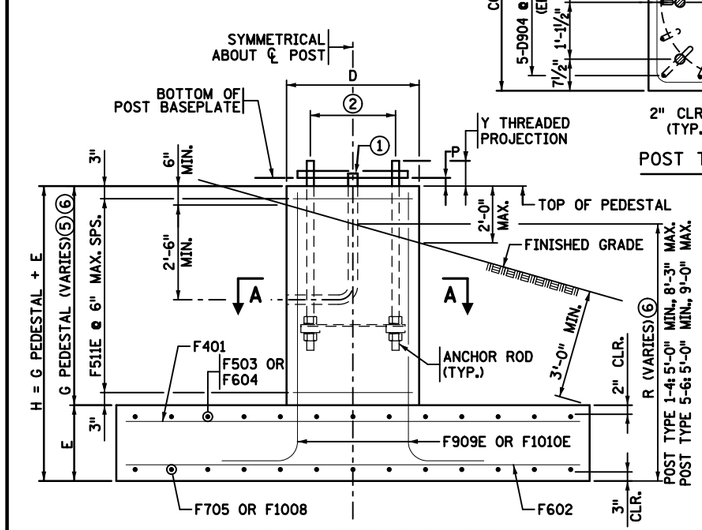

SPREAD FOOTING ELEVATION

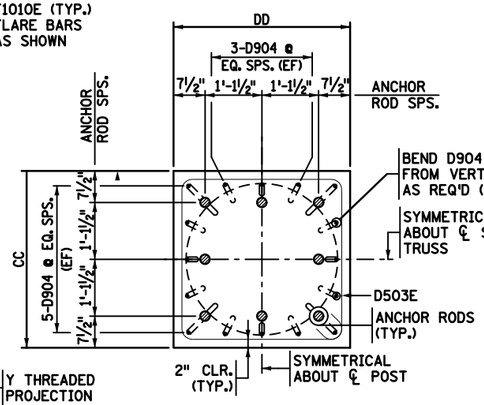

POST TYPE 1 THRU 4

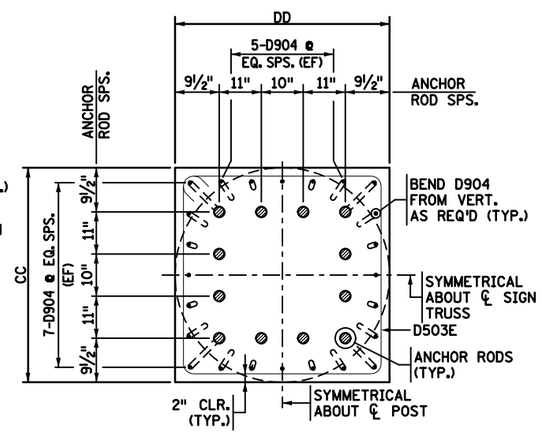

POST TYPE 5 THRU 6

DRILLED SHAFT SECTION B-B

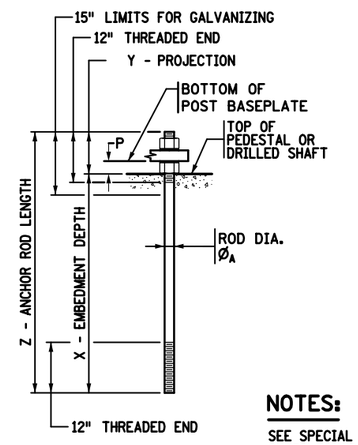

ANCHOR ROD DETAIL

(ROD MATERIAL IS SPEC. 3385 TYPE B)

NOTES:

SEE SPECIAL PROVISIONS FOR ADDITIONAL INFORMATION REGARDING DRILLED SHAFT FOUNDATIONS.

PERMANENT CASINGS ARE NOT ALLOWED FOR DRILLED SHAFT FOUNDATIONS.

USE PREFORMED JOINT FILLER BETWEEN THE FOUNDATION AND SIDEWALK OR OTHER CONCRETE AREAS.

COLD CONCRETE CONSTRUCTION JOINTS ARE NOT PERMITTED.

CURE CONCRETE FOUNDATIONS A MINIMUM OF SEVEN DAYS PRIOR TO PLACING POST AND TRUSS.

ALL CONCRETE SHALL CONFORM TO CONCRETE MIX 3G52 (SPEC. 2461).

(EF) DENOTES EACH FACE.

① 1½" AND 3" SERVICE CONDUITS. HOWEVER, IF DMS IS MOUNTED ON THE SPAN, F&I CONDUIT PER PLAN.

② SEE STANDARD PLAN 5-297.763 2 OF 2 FOR ANCHOR ROD ASSEMBLY DETAIL. GALVANIZE ANCHOR RODS IN ACCORDANCE WITH SPEC. 3392.

③ FORM A MINIMUM OF 6" BELOW THE GROUND SURFACE. BACKFILL AND TAMP THE EXCAVATIONS REQUIRED FOR FORMING PER SPEC. 2105.3.F.2. BACKFILL MATERIAL AND COMPACTION TO BE EQUIVALENT TO THE SURROUNDING MATERIAL.

④ EXCAVATE TO NEAT LINES AND PLACE CONCRETE AGAINST UNDISTURBED SOIL.

⑤ POST TYPE 1-4: 3'-6" MIN., 7'-6" MAX.
POST TYPE 5-6: 3'-6" MIN., 8'-3" MAX.

⑥ THE FINISHED GRADE SLOPE MAY VARY FROM LEVEL TO THAT GENERATED BY THE COMBINATION OF 6" MINIMUM AND 24" MAXIMUM PEDESTAL PROJECTIONS. AS SUCH, DIMENSIONS G AND R WILL VARY. DETERMINE G AND R DIMENSIONS FOR A SPECIFIC SITE BY INTERPOLATING BETWEEN THE MINIMUM AND MAXIMUM VALUES PROVIDED FOR THE ACTUAL SLOPE CONDITION.

SOIL PARAMETERS:

A SUBSURFACE INVESTIGATION SHOULD BE PERFORMED WITHIN 30 FT. HORIZONTALLY FROM EACH POST FOUNDATION. THE SOIL BORING OR CONE SOUNDING SHOULD PENETRATE A MINIMUM DEPTH OF 35 FT.

FOR SPREAD FOOTINGS, THE WATER TABLE SHALL BE AT THE BOTTOM OF FOOTING ELEVATION OR LOWER.

FOR DRILLED SHAFTS, THE WATER TABLE SHALL BE 1.5 FT. BELOW FINISHED GRADE OR LOWER.

THE FOUNDATION DIMENSIONS SHOWN ON THIS SHEET HAVE BEEN DESIGNED WITH THE FOLLOWING ASSUMED SOIL PROPERTIES:

DRILLED SHAFTS:

COHESIVE SOILS:

MIN. SHEAR STRENGTH:	C = 1.0 ksf
UNIT WEIGHT OF SOIL:	γ = 125±10 pcf

GRANULAR SOILS:

MIN. ANGLE OF FRICTION:	$\varnothing$ = 30°
UNIT WEIGHT OF SOIL:	γ = 125 pcf
MAX. COEFFICIENT OF FRICTION:	μ = 0.70

SPREAD FOOTINGS:

SERVICE LIMIT STATE:

MAXIMUM BEARING PRESSURE:	2.50 KSF
BEARING RESISTANCE FACTOR:	1.0
MAXIMUM SETTLEMENT:	1.0 INCH

STRENGTH LIMIT STATE:

MAXIMUM BEARING PRESSURE:	5.55 KSF
BEARING RESISTANCE FACTOR:	0.45

A SPECIAL FOUNDATION DESIGN IS REQUIRED IN CASES WHERE THE REQUIRED VALUES AND/OR CONDITIONS LISTED ABOVE ARE NOT MET.

FOUNDATION DATA

POST TYPE	SPREAD FOOTING DIMENSIONS					DRILLED SHAFT DIMENSIONS				ANCHOR RODS				
	A	B	C	D	E	AA	BB	CC	DD	P	X	Y	Z	ROD DIA. ØA
1-4	14'-0"	9'-0"	3'-6"	3'-6"	2'-0"	3'-6"	23'-0"	3'-6"	3'-6"	3.875"	38.5"	9.5"	48.0"	2.25"
5-6	18'-0"	12'-6"	3'-11"	3'-11"	2'-0"	4'-3"	29'-0"	4'-3"	4'-3"	4.125"	37.0"	11.0"	48.0"	2.50"

REVISION: MAY 28, 2019

APPROVED: MAY 1, 2019
KEVIN WESTERN
STATE BRIDGE ENGINEER

MINNESOTA DEPARTMENT OF TRANSPORTATION

STANDARD PLAN 5-297.763 | 1 OF 2

APPROVED: 5-1-2019
REVISED: 5-28-2019
THOMAS STYRBICKI
STATE DESIGN ENGINEER

STANDARD OVERHEAD SIGN STRUCTURES – DESIGN D
FOUNDATION DETAILS

STATE PROJ. NO. (T.H.) SHEET NO. OF SHEETS

BILL OF REINFORCEMENT - SPREAD FOOTING							
	BAR	POST TYPE				SHAPE	LOCATION
		POST TYPE 1-4		POST TYPE 5-6			
		QTY.	LENGTH	QTY.	LENGTH		
	F401	14	8'-6"	18	12'-0"	——	FOOTING TOP TRANSVERSE
	F602	14	8'-6"	18	12'-0"	——	FOOTING BOTTOM TRANSVERSE
	F503	9	13'-6"	-	-	——	FOOTING TOP LONGITUDINAL
	F604	-	-	13	17'-6"	——	FOOTING TOP LONGITUDINAL
	F705	9	13'-6"	-	-	——	FOOTING BOTTOM LONGITUDINAL
	F1008	-	-	13	17'-6"	——	FOOTING BOTTOM LONGITUDINAL
1	F909E	22	H + 23"	-	-	L	PEDESTAL VERTICAL
1	F1010E	-	-	24	H + 26"	L	PEDESTAL VERTICAL
1 3	F511E	2G	13'-7"	2G	15'-3"	▭	PEDESTAL TIES

BILL OF REINFORCEMENT - DRILLED SHAFTS							
	BAR	POST TYPE				SHAPE	LOCATION
		POST TYPE 1-4		POST TYPE 5-6			
		QTY.	LENGTH	QTY.	LENGTH		
	D401	1	16'-6"	1	22'-6"	SPIRAL	DRILLED SHAFT SPIRAL
2	D502	5	14'-1"	5	17'-1"	——	TRANSITION TIES
	D503E	7	13'-7"	7	16'-7"	▭	PEDESTAL TIES
	D904	16	22'-7"	24	28'-7"	——	DRILLED SHAFT VERTICALS

REINFORCEMENT NOTES:

BARS MARKED WITH THE SUFFIX "E" SHALL BE EPOXY COATED IN ACCORDANCE WITH SPEC. 3301.

1 G AND H ARE IN FEET.

2 BEND AS REQUIRED TO FORM A CLOSED LOOP.

3 TO DETERMINE QUANTITY, ROUND G DIMENSION UP TO THE NEAREST WHOLE NUMBER.
FOR EXAMPLE: IF G = 4.10 FT.; 2(G) = 8.2; QTY. REQ'D = 9.

BAR BENDING DIAGRAMS

BENT BAR DIMENSIONS GIVEN ARE OUT-TO-OUT. DETERMINE ACTUAL BAR LENGTHS BASED ON THE DETAIL DIMENSIONS SHOWN IN THE BAR BENDING DIAGRAMS.

* DENOTES STANDARD STIRRUP HOOK.

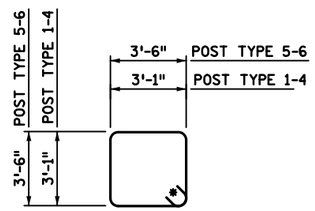

F511E

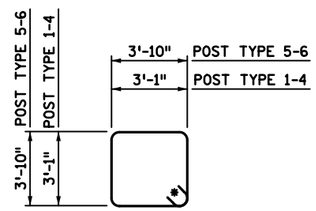

D503E

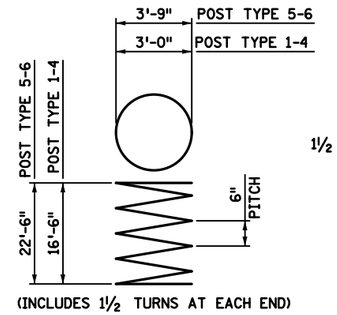

D401

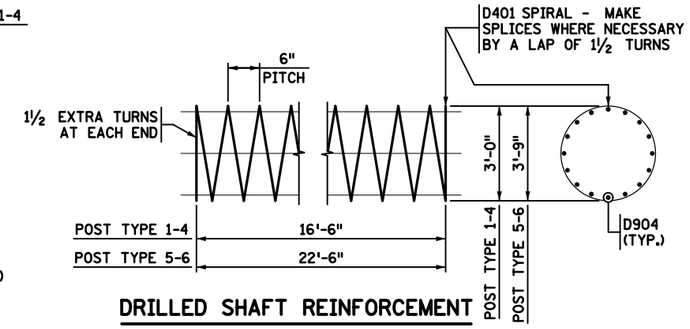

DRILLED SHAFT REINFORCEMENT

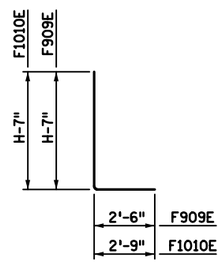

F909E & F1010E

SUMMARY OF ESTIMATED QUANTITIES - SPREAD FOOTING				
	ITEM DESCRIPTION	UNIT	QUANTITIY	
			POST TYPE 1-4	POST TYPE 5-6
4	STRUCTURAL CONCRETE (3G52)	CU YD	9.3 + 0.46G	16.7 + 0.57G
4	REINFORCEMENT BARS	POUND	930 + 103G	2220 + 134G
	ANCHORAGE ASSEMBLY	POUND	799	1392
4	STRUCTURE EXCAVATION	CU YD	7.4R	12.1R

SUMMARY OF ESTIMATED QUANTITIES - DRILLED SHAFTS			
ITEM DESCRIPTION	UNIT	QUANTITIY	
		POST TYPE 1-4	POST TYPE 5-6
STRUCTURAL CONCRETE (3G52)	CU YD	9.1	15.9
REINFORCEMENT BARS	POUND	1660	2940
ANCHORAGE ASSEMBLY	POUND	799	1392

QUANTITY NOTE:

4 G AND R ARE IN FEET. SEE STANDARD PLAN 5-297.763 1 OF 2 FOR DETAILS.

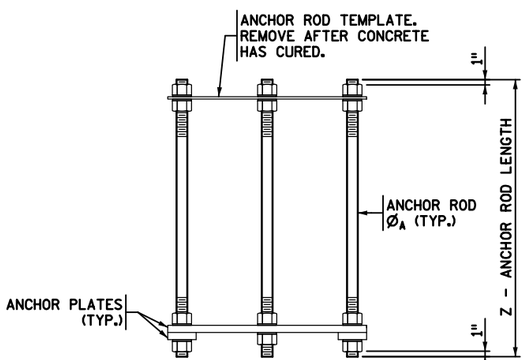

EACH ANCHOR ROD TO BE PROVIDED WITH (4) HEAVY HEX NUTS, AND (4) HARDENED FLAT WASHERS. (2) ANCHOR PLATES TO BE PROVIDED PER ASSEMBLY. GALVANIZE ALL EXPOSED HEX NUTS AND WASHERS. GALVANIZE ANCHOR RODS TO THE LIMITS SHOWN ON STANDARD PLAN 5-297.763 1 OF 2. DO NOT GALVANIZE ANCHOR ROD TEMPLATES AND HARDWARE EMBEDDED IN CONCRETE.

ANCHOR ROD ASSEMBLY

(ROD MATERIAL IS SPEC. 3385 TYPE B)

REMOVE ANCHOR ROD TEMPLATE IN PREPARATION FOR THE POST PLACEMENT.
PLACE POST BASE PLATE LEVEL.
TIGHTEN HEX NUTS PER THE SPECIAL PROVISIONS.

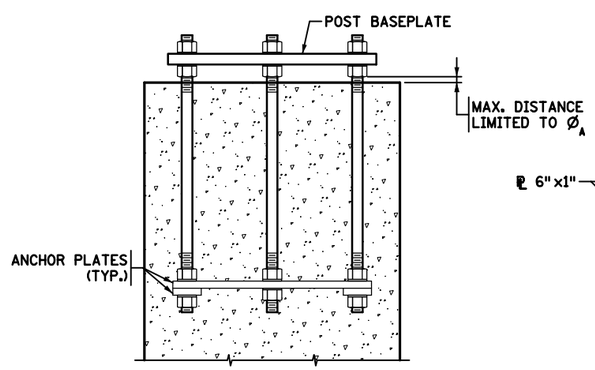

PARTIAL ELEVATION

(SHOWING BASE PLATE & ANCHOR ROD ASSEMBLY)

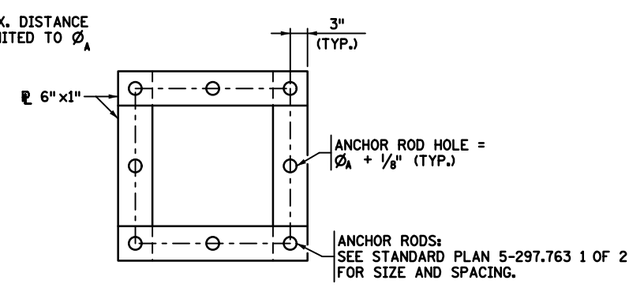

ANCHOR PLATE PLAN

(ANCHOR PLATE SHOWN SIMILAR FOR ALL ANCHOR ROD SPACING)

ANCHOR ROD DETAILS

REVISION: MAY 28, 2019

APPROVED: MAY 1, 2019

KEVIN WESTERN
STATE BRIDGE ENGINEER

MINNESOTA DEPARTMENT OF TRANSPORTATION

THOMAS STYRBICKI
STATE DESIGN ENGINEER

STANDARD PLAN 5-297.763 | 2 OF 2

APPROVED: 5-1-2019
REVISED: 5-28-2019

STATE PROJ. NO. (T.H.) SHEET NO. OF SHEETS

STANDARD OVERHEAD SIGN STRUCTURES - DESIGN D
FOUNDATION DETAILS