T-631
Tractors: Skid Steers Attachments
727-1019

SKID / COMPACT TRACK LOADER
DISCOUNT OFF LIST PRICING INFO
SPECIFICATION 5.0

October, 2019

Vendor Name:	**Clark Equipment Company dba Bobcat Company**
Contact Person:	**Jesse Rheault**
Street Address:	**250 East Beaton Dr.**
P.O. Box:	
City, State, Zip	**West Fargo, ND 58078**
Phone #:	**701-630-5134**
Toll Free #:	**1-800-965-4232**
Email Address:	Jesse.Rheault@Doosan.com
Website:	**Bobcat.com**

SPEC NUMBER	PERCENTAGE DISCOUNT PRICING		ANSWER
5.1	**MANUFACTURER**		Bobcat Company
5.2	**DATE AND ID. OF PRICE LIST**		T-631(5) - Bobcat Price Pages (Nov 2019)
5.3	**PERCENTAGE DISCOUNT FROM PRICE LIST**		30%
	Attachments Discount from List		24%
5.4	**PRICE FOR ADDITIONAL MANUALS** (1 of each included at no cost, per specs)		
	ADDITIONAL SERVICE MANUAL		
		Digital	$125
		Paper	$125
	ADDITIONAL PARTS MANUAL		
		Digital	$125
		Paper	$125
	PRICE FOR ADDITIONAL OPERATIONS MANUAL		
		Digital	$125
		Paper	$125
5.5	**PERFORMANCE/ WARRANTY OPTIONS**		
	Use this section to offer performance/warranty options, number these items starting with 5.1, 5.2, etc. **(Specify years, miles or hours extended term covers.)**		
	24 Months/2000 Hours Full Coverages		No Charge
	24/3000 Full Coverage		30% off MSRP
	24/4000 Full Coverage		30% off MSRP
	24/5000 Full Coverage		30% off MSRP
	36/2000 Full Coverage		30% off MSRP
	36/3000 Full Coverage		30% off MSRP
	36/4000 Full Coverage		30% off MSRP
	36/5000 Full Coverage		30% off MSRP
	48/2000 Full Coverage		30% off MSRP
	48/3000 Full Coverage		30% off MSRP
	48/4000 Full Coverage		30% off MSRP
	48/5000 Full Coverage		30% off MSRP
	60/2000 Full Coverage		30% off MSRP
	60/3000 Full Coverage		30% off MSRP
	60/4000 Full Coverage		30% off MSRP
	60/5000 Full Coverage		30% off MSRP
	*The Above Monthly/Hourly Configurations Power Train Only		30% off MSRP
	* Small Articulating Loaders Warranty is 1 yr/Unlimited hours		No Charge
	* Small Articulating Loaders Extended Warranty discount:		24% off MSRP
5.6	**NEW EQUIPMENT RENTAL PROGRAM**		
	If rental programs are available on the new equipment offered, with the option to purchase, list the hourly/weekly/monthly rental rate. Indicate the percent of rental fee paid by the purchaser that will be applied to the purchase price. See Solicitation Special Terms & Conditions.		
		Hourly Rental Rate:	N/A
		Weekly Rental Rate:	N/A
		Monthly Rental Rate:	N/A
		Percent (%) of Rental Fee applied to purchase price:	N/A
5.7	**VENDOR OWNED RENTAL RETURN OR DEMO EQUIPMENT PROGRAM**		
	See Solicitation Special Terms and Conditions.		
		DEDUCT cost per Used Hour from the original Contract Price	N/A
5.8	**DISCOUNT OFF LIST PRICE FOR RELATED PARTS & ACCESSORIES**		0%
	(See Special Terms and Conditions)		
5.9	**DELIVERY STARTING POINT**		
		City, State, Zip	Gwinner, ND 58040
	(See Special Terms and Conditions - no flat rate allowed.)	**Price Per Loaded Mile:**	No Charge
5.10	**INSTALLATION - PER HOUR (Hourly Shop Rate):**		
	(Installation services may be requested on an "as needed" basis - see special terms and conditions.)		$135.00

SWIFT EVENT TITLE & NUMBER: TRACTORS, SKID STEERS AND OEM ATTACHMENTS T-631(5) G0210-000010303

**** Following is a list of all distributors that are authorized to sell the contract equipment listed in the above solicitation.**

**** SWIFT Vendor Numbers: Provide the Swift Vendor Number (SWIFT ID) and Location Code (LOC CODE) for each Authorized Distributor. Each Authorized Distributor must have an accurate SWIFT ID.**

**** INSURANCE: All distributors MUST provide the required insurance certificates to the State as outline in the Swift Event Special Terms and Conditinos before any State Contract may be executed.**

COMPANY NAME	SWIFT ID	LOC CODE	COMPANY ADDRESS	ST /ZIP	PHONE	CONTACT NAME
Bobcat of Mankato, Mankato, MN	0000915621	003	2333 7TH AVENUE MANKATO	MN 56001	507-625-4511	Aron Willaby
Bobcat of Rochester, Stewartville, MN	0000273933	001	103 20TH STREET NE STEWARTVILLE	MN 55976	507-285-0753	CRAIG BLOOD
Sanco Equipment, LLC, Albert Lea, MN	0000915621	001	2317 CONSUL STREET, ALBERT LEA	MN 56007	507-373-4490	Dan Pagel
Alex Power Equipment,Alexandria,MN	0000196200	001	111 50TH AVENUE WEST ALEXANDRIA	MN 56308	(320) 763-4994	CRAIG NEUBARTH
Bobcat of Otter Tail County, Fergus Falls, MN	0002256287	001	3327 EAST FIR AVENUE FERGUS FALLS	MN 56537	(218) 739-4505	Roger Patterson
Farm-Rite Equipment of Long Prairie, Inc.	0000228536	001	19612 US 71 Long Prairie	MN 56347	320-732-3715	Dean Schreiner
Farm-Rite Equipment of St. Cloud, St. Cloud, MN	0000228536	002	810 MAYHEW LAKE RD NE ST. CLOUD	MN 56304	320-240-2085	Jay Kockler
Farm-Rite Equipment of Willmar, Inc., Willmar, MN	0000846727	001	1515 WEST LITCHFIELD AVENUE WILLMAR	MN 56201	320-235-3672	Dan Ronning
Farm-Rite Equipment, Inc, Dassel,MN	0000228536	001	901 PARKER AVE DASSEL	MN 55325	(320) 275-2737	DAVID COX
Lano Equipment, Inc,Ramsey,MN	0000193199	002	61 40 HIGHWAY 10 NW RAMSEY	MN 55303	(763) 323-1720	RYAN SABRE
Lano Equipment, Inc,Shakopee,MN	0000193199	001	3021 133RD STREET WEST SHAKOPEE	MN 55379	(952) 445-6310	JUSTON LANO
Lano Equipment, Inc., Corcoran,MN	0000193199	003	23580 HIGHWAY 55 CORCORAN	MN 55357	(763) 479-8200	GARY LANO
Tri-State Bobcat Inc,Burnsville,MN	0000206308	001	1200 HWY 13 E BURNSVILLE	MN 55337	(952) 894-0894	Jon Quirk
Tri-State Bobcat, Inc,Little Canada,MN	0000206308	002	3101 SPRUCE STREET LITTLE CANADA	MN 55117	(651) 407-3727	Jon Quirk
Tri-State Bobcat, Inc, Hudson, WI	0000206308	003	745 EXCHANGE DR HUDSON	WI 54016	(715) 531-0801	Jon Quirk
Bobcat of Fargo, a Division of Swanston Equipment,Fargo,ND	0000197573	1	3450 WEST MAIN AVENUE FARGO	ND 58103	(701) 293-7325	Mason Persons
Bobcat of Morris, Inc., Morris, MN			19700 470TH AVENUE MORRIS	MN 56267	(320) 589-4439	SHAWN KIRWIN
Crawford's Equipment, Inc.,Cambridge,MN	0000294005	001	4898 HWY 95 NW CAMBRIDGE	MN 55008	(763) 689-1794	BRIAN CRAWFORD
GDF Enterprises Inc,Windom,MN	0000259927	001	1815 1ST AVE N WINDOM	MN 56101	(507) 831-5342	GREG PFEFFER
Jaycox Implement, Inc,Worthington,MN	0000203511	001	3021 133RD STREET WEST WORTHINGTON	MN 55379	(507) 376-3147	CHAD JAYCOX
Jaycox Implement, Inc., Luverne, MN	0000203511		410 West Koehn Ave Luverne	MN 56156	507-283-2319	CHAD JAYCOX
Lano Equipment of Norwood,Norwood Young America,MN	0000213525	001	1015 HWY 212 WEST NORWOOD YOUNG AMERICA	MN 55368	(952) 467-2181	JACK LANO
Lund Implement Company,Madison,MN			2488 HIGHWAY 75 NORTH MADISON	MN 56256-0097	(320) 598-3150	Donald Lund
Matejcek Implement Company,Faribault,MN	0000194592	001	3040 HIGHWAY 60 WEST FARIBAULT	MN 55021	(507) 334-2233	HERB ENGLER
Miller Sellner Slayton, LLC	0000224886	001	1535 20TH STREET SLAYTON	MN 56172-1146	(507) 836-8571	Julie Lamb
Swede's Service Center,Minneota, MN			110 WEST 1ST STREET MINNEOTA	MN 56264	(507) 872-6206	Dennis Swedzinski
United Farmers Cooperative,Lafayette, MN			840 PIONEER AVENUE LAFAYETTE	MN 56054	(507) 228-8224	Jenna Wenninger
Yeager Implement Inc,Blue Earth,MN	0000299372	001	1010 GIANT DRIVE BLUE EARTH	MN 56013	(507) 526-5918	BILL FARNHAM
Aldrich Tractor, Inc., Verndale, MN	0000220002	001	19828 US HIGHWAY 10 VERNDALE	MN 56481	218-445-5430	TIM CURRENT
Bobcat of Brainerd, Brainerd, MN	0000193375	1	11570 MN-371 BUS A BRAINERD	MN 56401	763-263-0505	Isaac Schulz
Bobcat of Duluth Inc,Duluth,MN	0000236269	002	4610 WEST ARROWHEAD ROAD DULUTH	MN 55811	(218) 727-7377	DAN LINDE
Bobcat of the Coulee Region, Inc., Dresbach, MN	894954	001	31465 VETERANS RD DRESBACH	MN 55947	(507) 643-6781	Andy Kasten
Timmer Implement, Inc., Aitkin, MN			1001 2ND STREET NW AITKIN	MN 56431	218-927-2515	Greg Ruis
Bobcat of Bemidji, Bemidji, MN	0000251301	001	3516 IRVINE AVE NW BEMIDJI	MN 56601	218-751-4660	Brian Splettstoeszer
Swanson's Repair, Inc,Detroit Lakes,MN	0000212524	001	1220 RANDOLPH ROAD DETROIT LAKES	MN 56501	(218) 847-2157	RYAN SWANSON
Bobcat of Grand Forks	0000251301		3903 GATEWAY DR GRAND FORKS	ND 58203	(701) 772-5006	Brian Splettstoeszer
Bobcat Company West Fargo ND	0000207426	001	250 East Beaton Drive, West Fargo	ND 58078	701-241-8746	RANDY FUSS

November 7, 2019
BOBCAT SLP Pages

Bobcat

BOBCAT COMPANY SUGGESTED PRICE LIST

Bobcat Company

ORDER ADDRESS:
CLARK EQUIPMENT COMPANY dba BOBCAT COMPANY
250 EAST BEATON DRIVE
PO BOX 6000
WEST FARGO, ND 58078-6000

Government Sales Points of Contact:	Phone:
Heather Messmer - Government Accounts Sales Support Mgr. heather.messmer@doosan.com	(701) 241-8719
Jesse Rheault - Government Account Manager jesse.rheault@doosan.com	(701) 241-8759
Barry Hanson - Government Account Manager barry.hanson@doosan.com	(701) 241-8793
Randy Fuss - Director, Government Accounts randy.fuss@doosan.com	(701) 241-8746

TOLL FREE #: 800-965-4232, Opt#2
FAX#: 701-280-7860

PROMPT PAYMENT TERMS: Net 30
TIME OF DELIVERY: 60 to 90 Days ARO
COMMERCIAL CREDIT CARD: Accepted (Visa/Mastercard/American Express)

TID#: 38-0425350

REMIT TO ADDRESS:
CLARK EQUIPMENT COMPANY dba BOBCAT COMPANY
75 REMITTANCE DR, SUITE 1130
CHICAGO, IL 60675-1130

Product	Discount Percent
Skid Steer Loaders	30.0%
Compact Track Loaders	30.0%
All Wheel Steer Loaders	30.0%
Small Articulating Wheel Loaders	24.0%
Loader Attachments	24.0%

November 7, 2019
BOBCAT SLP Pages

S70 (Tier 4)
Bobcat Skid Steer Loader

Standard Equipment

23.5 HP Tier 4 Diesel Engine
Auxiliary Hydraulics
Backup Alarm
Bob-Tach
Bobcat Interlock Control System (BICS TM)
Controls: Bobcat Standard
Glow Plugs (Automatically Activated)
Horn
Instrumentation: Hourmeter, Engine Temperature Gauge, Fuel Gauge (On Tank), Voltmeter and Warning Lights
Lift Arm Support
Lift Path: Radius
Lights: Front & Rear
Operator Cab
- Includes: Suspension Cushion Seat, Parking Brake, Rear Window, Seat Bar, Seat Belt
- Roll Over Protective Structure (ROPS) meets SAE-J1040 & ISO 3471
- Falling Objects Protective Structure (FOPS) meets SAE-J1043 & ISO 3449, Level I

Spark Arrestor Muffler
Tires, 23 x 5.70-12, 4 PR, Bobcat Standard Duty
Warranty: 12 Months, Unlimited Hours

Quick Specs

	S70
Rated Operating Capacity	760 lbs.
Engine Model	D1005-E4B
Engine Fuel	Diesel
Engine Cooling	Liquid
Horsepower	23.5
Hydraulic Pump Capacity – Standard Flow	9.8 GPM
Travel Speed	6.1 MPH
Operating Weight	2,892 lbs.
Shipping Weight	2,545 lbs.
Cab Height	71.4"
Width (w/out Attachment)	35.5"
Length (w/out Attachment)	75.8"
Wheelbase	28.4"
Reach at Maximum Height	15.8"
Height to Hinge Pin	94.5"

S70 (Tier 4)
Bobcat Skid Steer Loader

Part Number	Description	Skid Steer Loader SLP In US $	Discount %	Discounted Price
M4003	S70 Bobcat Skid-Steer Loader (Equipped with T4 Engine)	$22,258	30%	$15,580.60

Part Number	Description	Factory Installed Options SLP In US $	Discount %	Discounted Price
M4003-R02-C02	Cab Enclosure with Heater and Sound Reduction. Includes Heater, Front Door with Wiper, Top and Side Sliding Windows, Rubber Floor Covers, Side Instrument Panel and Sound Reducing Foam Insulation.	$1,838	30%	$1,286.60
M4003-R05-C03	Suspension Seat (Standard Equipment)	$194	30%	$135.80
M4003-R09-C02	23 x 8.50-12, 6 PR, Heavy Duty Tires. Set of four tires in place of base equipment. Loader width 44"	$194	30%	$135.80

S450 (Tier 4)
Bobcat Compact Skid Loader

Standard Equipment

49 HP Turbo Tier 4 Diesel Engine
Auxiliary Hydraulics: Variable Flow
Backup Alarm
Bob-Tach
Bobcat Interlock Control System (BICS ™)
Controls: Bobcat Standard
Engine/Hydraulic Systems Shutdown
Glow Plugs (Automatically Activated)
Horn
Instrumentation: Engine Temperature & Fuel Gauges, Hourmeter, RPM and Warning Lights
Lift Arm Support
Lift Path: Radius
Lights, Front & Rear
Operator Cab
- Includes: Adjustable Cushion Seat, Top & Rear Windows, Parking Brake, Seat Bar & Seat Belt
- Roll Over Protective Structure (ROPS) meets SAE-J1040 & ISO 3471
- Falling Object Protective Structure (FOPS) meets SAE-J1043 & ISO 3449, Level I; (Level II is available through Bobcat Parts)

Spark Arrestor Exhaust System
Tires: 10-16.5, 10 PR, Bobcat Heavy Duty

Quick Specs

	S450
Rated Operating Capacity	1,300 lbs.
Engine Model	1.8L Bobcat Engine
Engine Fuel	Diesel
Engine Cooling	Liquid
Horsepower	49
Hydraulic Pump Capacity – Standard Flow	16.7 GPM
Travel Speed	7.1 MPH
Travel Speed – 2 Speed with SJC	6.5/9.2 MPH
Operating Weight	5,027 lbs.
Shipping Weight	4,520 lbs.
Cab Height	77.8"
Width (w/out Attachment)	58.6"
Length (w/out Attachment)	98.4"
Wheelbase	35.4"
Reach at Maximum Height	20.8"
Height to Hinge Pin	109.5"

S450 (Tier 4)
Bobcat Compact Skid Loader

Part Number	Description	Skid Steer Loader SLP In US $	Discount %	Discounted Price
M0201	S450 Skid Steer Loader (Equipped with Tier 4 Engine)	$34,857	30%	$24,399.90

Part Number	Description	Air Conditioned/Heated Cab Packages SLP In US $	Discount %	Discounted Price
M__-P01-A51	A51 Option Package. Enclosed Cab with AC/Heat, Suspension Seat, Cab Accessories Package*, Power Bob-Tach	$5,369	30%	$3,758.30

Part Number	Description	Heated Cab Packages SLP In US $	Discount %	Discounted Price
M__-P01-H51	H51 Option Package. Enclosed Cab with Heat, Suspension Seat, Cab Accessories Package*, Power Bob-Tach	$3,798	30%	$2,658.60

Part Number	Description	Open Cab Packages SLP In US $	Discount %	Discounted Price
M__-P01-O31	O31 Option Package. Suspension Seat, Cab Accessories Package*	$957	30%	$669.90

*Cab Accessories Package: Deluxe Headliner with Dome Light, Cab Accessory Harness, Power Port, Lower Interior Panels with Storage Compartments and Cup Holder.

Part Number	Description	Factory Installed Options SLP In US $	Discount %	Discounted Price
	Controls			
M__-R01-C04	Selectable Joystick Control (SJC) with 2 Speed. Features include: 2 Speed Travel, Selectable patterns (ISO or H-Pattern), Auto Idle, Horsepower Management, Speed Management, Drive Response, Drift Compensation and Foot Pedal for Engine Speed Control. Must order the A51 or O51 Cab Package. Not allowed with H51 Package.	$2,013	30%	$1,409.10

S550/S570/S590 (Tier 4)
Bobcat Compact Skid Loader

Standard Equipment

61.0 HP Turbo Tier 4 Diesel Engine (S550/S570)
66.0 HP Turbo Tier 4 Diesel Engine (S590)
Auxiliary Hydraulics: Variable Flow
Backup Alarm
Bob-Tach
Bobcat Interlock Control System (BICS ™)
Controls: Bobcat Standard
Cylinder Cushioning – Lift, Tilt
Engine/Hydraulic Systems Shutdown
Glow Plugs (Automatically Activated)
Horn
Instrumentation: Engine Temperature & Fuel Gauges, Hourmeter, RPM and Warning Lights
Lift Arm Support
Lift Path: Radius (S550), Vertical (S570/S590)
Lights, Front & Rear
Operator Cab
- Includes: Adjustable Suspension Seat, Top & Rear Windows, Parking Brake, Seat Bar & Seat Belt
- Roll Over Protective Structure (ROPS) meets SAE-J1040 & ISO 3471
- Falling Object Protective Structure (FOPS) meets SAE-J1043 & ISO 3449, Level I; (Level II is available through Bobcat Parts)

Spark Arrestor Exhaust System
Tires: 10-16.5, 8 PR, Bobcat Standard Duty (S550/S570)
Tires: 31 x 12-16.5, 10 PR, Bobcat Heavy Duty (S590)

Quick Specs

	S570	S590
Rated Operating Capacity	1,950 lbs.	2,100 lbs.
Engine Model	2.4L Bobcat Engine	2.4L Bobcat Engine
Engine Fuel	Diesel	Diesel
Engine Cooling	Liquid	Liquid
Horsepower	61	66
Hydraulic Pump Capacity – Standard Flow	17.1 GPM	17.1 GPM
Travel Speed	7.4 MPH	7.4 MPH
Travel Speed – 2 Speed with SJC	7.4/11.0 MPH	7.4/11.0 MPH
Operating Weight	6,480 lbs.	6,593 lbs.
Shipping Weight	5,812 lbs.	5,937 lbs.
Cab Height	77.8"	77.8"
Width (w/out Attachment)	64.7"	65.2"
Length (w/out Attachment)	104.6"	104.6"
Wheelbase	42.6"	42.6"
Reach at Maximum Height	32.6"	32.6"
Height to Hinge Pin	119.0"	119.0"

S550/S570/S590 (Tier 4)
Bobcat Compact Skid Loader

Part Number	Skid Steer Loader Description	SLP In US $	Discount %	Discounted Price
M0253	S550 Skid Steer Loader (Equipped with Tier 4 Engine)	$39,416	30%	$27,591.20
M0259	S570 Skid Steer Loader (Equipped with Tier 4 Engine)	$41,380	30%	$28,966.00
M0261	S590 Skid Steer Loader (Equipped with Tier 4 Engine)	$43,725	30%	$30,607.50

Part Number	Machine Configuration Description	SLP In US $	Discount %	Discounted Price
	CAN BE SELECTED WITH PACKAGES OR WITH INDIVIUAL OPTIONS			
	Tires (S550& S570)			
	Set of 4 Tires in Place of Base Equipment			
M__-R09-C02	10-16.5, 10 PR, Bobcat Heavy Duty Tires Loader width 64.7"	$269	30%	$188.30
M__-R09-C03	10-16.5, 10 PR, Bobcat Heavy Duty Tires Offset Loader width 59.5"	$314	30%	$219.80
M__-R09-C06	31 x 12-16.5, 10 PR, Bobcat Heavy Duty Wide Flotation Tires Loader width 65.2"	$634	30%	$443.80
	Tires (S590)			
	Set of 4 Tires in Place of Base Equipment			
M0261-R09-C02	10-16.5, 10 PR, Bobcat Heavy Duty Tires Loader width 64.7"	$0	30%	$0.00
M0261-R09-C03	10-16.5, 10 PR, Bobcat Heavy Duty Tires Offset Loader width 59.5"	$58	30%	$40.60
	Controls			
M_-R01-C04	Selectable Joystick Control (SJC) Features include: Selectable patterns (ISO or H-Pattern), Auto Idle, Horsepower Management, Speed Management, Drive Response, Drift Compensation and Foot Pedal for Engine Speed Control. *The Cab Accessories Package is required via Individual Factory Option if option ordered	$795	30%	$556.50

Part Number	Comfort Cab Packages Description	SLP In US $	Discount %	Discounted Price
	MUST SELECT ONE COMFORT AND ONE PERFORMANCE PACKAGE OR SELECT INDIVIUAL OPTIONS			
M_-P07-C10	C10 Comfort Package Includes: Open Cab, Cab Accessories Package, Standard Panel, Adjustable Suspension Seat	$495	30%	$346.50
M_-P07-C23	C23 Comfort Package Includes: Enclosed Cab with AC/Heat, Sound Reduction, Cab Accessories Package, Standard Panel, Adjustable Suspension Seat	$4,752	30%	$3,326.40
M_-P07-C27	C27 Comfort Package Includes: Enclosed Cab with AC/Heat, Sound Reduction, Cab Accessories Package, Standard Panel, Radio, Heated Cloth Air Ride Suspension Seat	$5,725	30%	$4,007.50
M_-P07-C37	C37 Comfort Package Includes: Enclosed Cab with AC/Heat, Sound Reduction, Cab Accessories Package, Deluxe Instrument Panel with Keyless Start, Radio, Heated Cloth Air Ride Suspension Seat	$6,435	30%	$4,504.50

S550/S570/S590 (Tier 4)
Bobcat Compact Skid Loader

Part Number	Performance Cab Packages Description	SLP in US $	Discount %	Discounted Price
	MUST SELECT ONE COMFORT AND ONE PERFORMANCE PACKAGE OR SELECT INDIVIUAL OPTIONS			
	Standard Flow Packages:			
M_-P06-P13	P13 Performance Package Includes: Power Bob-Tach, Hydraulic Bucket Positioning	$1,418	30%	$992.60
M_-P06-P20	P20 Performance Package Includes: 2-Speed	$1,723	30%	$1,206.10
M_-P06-P22	P22 Performance Package Includes: Power Bob-Tach, 2-Speed	$2,583	30%	$1,808.10
M_-P06-P24	P24 Performance Package Includes: Power Bob-Tach, 2-Speed, Hydraulic Bucket Positioning, Automatic Ride Control	$3,882	30%	$2,717.40
7374214	Attachment Control Kit For complete listing of Attachment Control Kits, P/N's and Descriptions – Refer to the Attachments Section of the Price Pages.	$_____	30%	#VALUE!
	High Flow Packages:			
M_-P06-P68	P68 Performance Package Includes: Power Bob-Tach, Attachment Control Kit, High Flow, 2-Speed, Hydraulic Bucket Positioning, Automatic Ride Control	$6,002	30%	$4,201.40
M_-P06-P69	P69 Performance Package Includes: Power Bob-Tach, Attachment Control Kit, High Flow, 2-Speed, Hydraulic Bucket Positioning, Automatic Ride Control, Reversing Fan	$6,618	30%	$4,632.60

S550/S570/S590 (Tier 4)
Bobcat Compact Skid Loader

Part Number	Individual Factory Options Description	SLP in US $	Discount %	Discounted Price
	CANNOT BE ADDED TO ANY ORDER WITH COMFORT AND PERFORMANCE PACKAGE SELECTION *NOTE: Individual Options SLP includes a 20% premium when compared to ordering the option in a package*			
	NOTE: Several individual options may require additional equipment, see details below. If the option requires additional equipment the Bobcat ordering systems will automatically add the required equipment to the order.			
	Individual Cab Options			
M_-R25-C04	Enclosed Cab With AC/Heat Deluxe cab with heat and air conditioning	$4,535	30%	$3,174.50
M_-R25-C03	Enclosed Cab With Heat Deluxe cab with heat	$2,677	30%	$1,873.90
M_-R70-C02	Sound Reduction Reduces operator and by-stander noise levels	$574	30%	$401.80
M_-R08-C03	Deluxe Instrument Panel with Keyless Start Monitors key loader functions, communicates alerts and provides additional attachment information to track usage.	$852	30%	$596.40
M_-R26-C02	Radio Includes weatherproof AM/FM/NOAA Weather Band Radio, Speakers, and Antenna. Works with MP3 or other portable music player. The Cab Accessories Package is required. See NOTE above.	$598	30%	$418.60
M_-R80-C02	Cab Accessories Package Deluxe Headliner with Dome Light, Cab Accessory Harness, Power Port, Lower Interior Panels with Storage Compartments and Cup Holder. Required for Reversing Fan, Hydraulic Bucket Positioning, Automatic Ride Control, and SJC, Radio, Air Ride Heated Seat, Power Bob-Tach. Required for Reversing Fan, Hydraulic Bucket Positioning, Automatic Ride Control, and SJC, Radio, Air Ride Heated Seat, Power Bob-Tach	$594	30%	$415.80
M_-R05-C12	Cloth Heated Air Ride Suspension Seat Includes Heat on/off switch on the back of the seat. The Cab Accessories Package is required. See NOTE above.	$570	30%	$399.00

S550/S570/S590 (Tier 4)
Bobcat Compact Skid Loader

Part Number	Individual Factory Option Description	SLP in US $	Discount %	Discounted Price
	Individual Performance Options			
M_-R06-C03	Power Bob-Tach.....	$1,032	30%	$722.40
	Connect and disconnect non-hydraulic attachments from inside the cab The Cab Accessories Package is required. See NOTE above.			
M_-R28-C02	7-Pin Attachment Control Kit.....	$294	30%	$205.80
	Required for High Flow Hydraulics.			
M_-R03-C03	High Flow Hydraulics.....	$2,250	30%	$1,575.00
	Provides 26.7 GPM and 3500 PSI for attachment operation. The 7-pin attachment control kit is required.			
M_-R04-C02	2-Speed.....	$2,068	30%	$1,447.60
	Includes 2-Speed motors and 3-Point Seat Belt Low Travel Speed 7.1 MPH, High Travel Speed 10.4 MPH			
M_-R11-C02	Hydraulic Bucket Positioning.....	$670	30%	$469.00
	Bucket Positioning helps the operator keep the same tilt of the load during lifting. Includes On/Off switch. The Cab Accessories Package is required. See NOTE above.			
M_-R33-C02	Automatic Ride Control.....	$889	30%	$622.30
	Automatically activates by detecting increased hydraulic lift arm pressure when the loader is carrying material. Includes on/off switch. The Cab Accessories Package is required. See NOTE above.			
M_-R32-C02	Reversing Fan.....	$739	30%	$517.30
	Temporarily reverses the cooling fan direction to blow dust and small debris from the radiator and rear screens. Includes three operating modes: Automatic, Momentary, & OFF. The Cab Accessories Package is required. See NOTE above.			

S595 (Tier 4)
Bobcat Compact Skid Loader

Standard Equipment

74.0 HP Turbo Tier 4 Diesel Engine (S595)
2-Speed Travel
Auxiliary Hydraulics: Variable Flow
Backup Alarm
Bob-Tach
Bobcat Interlock Control System (BICS ™)
Controls: Bobcat Standard
Cylinder Cushioning – Lift, Tilt
Engine/Hydraulic Systems Shutdown
Glow Plugs (Automatically Activated)
Horn
Instrumentation: Engine Temperature & Fuel Gauges, Hourmeter, RPM and Warning Lights
Lift Arm Support
Lift Path: Vertical
Lights, Front & Rear
Operator Cab
- Includes: Adjustable Suspension Seat, Top & Rear Windows, Parking Brake, Seat Bar & Seat Belt
- Roll Over Protective Structure (ROPS) meets SAE-J1040 & ISO 3471
- Falling Object Protective Structure (FOPS) meets SAE-J1043 & ISO 3449, Level I; (Level II is available through Bobcat Parts)

Spark Arrestor Exhaust System
Tires: 31 x 12-16.5, 10 PR, Bobcat Heavy Duty (S590)

Quick Specs

	S595
Rated Operating Capacity.....	2,200 lbs.
Engine Model.....	2.4L Bobcat Engine
Engine Fuel.....	Diesel
Engine Cooling.....	Liquid
Horsepower.....	74
Hydraulic Pump Capacity – Standard Flow.....	17.1 GPM
Travel Speed.....	7.4 MPH
Travel Speed – 2 Speed with S/C.....	7.4/11.0 MPH
Operating Weight.....	6,793 lbs.
Shipping Weight.....	6,137 lbs.
Cab Height.....	77.8"
Width (w/out Attachment).....	65.2"
Length (w/out Attachment).....	104.6"
Wheelbase.....	42.6"
Reach at Maximum Height.....	32.6"
Height to Hinge Pin.....	119.0"

S595 (Tier 4)
Bobcat Compact Skid Loader

Part Number	Skid Steer Loader Description	SLP In US $	Discount %	Discounted Price
M0247	S595 Skid Steer Loader (Equipped with Tier 4 Engine)	$46,252	30%	$32,376.40

Part Number	Machine Configuration Description	SLP In US $	Discount %	Discounted Price
	CAN BE SELECTED WITH PACKAGES OR WITH INDIVIUAL OPTIONS			
	Tires (S595)			
	Set of 4 Tires in Place of Base Equipment			
M0261-R09-C02	10-16.5, 10 PR, Bobcat Heavy Duty Tires Loader width 64.7"	$0	30%	$0.00
M0261-R09-C03	10-16.5, 10 PR, Bobcat Heavy Duty Tires Offset Loader width 59.5"	$58	30%	$40.60
	Controls			
M_-R01-C04	Selectable Joystick Control (SJC) Features include: Selectable patterns (ISO or H-Pattern), Auto Idle, Horsepower Management, Speed Management, Drive Response, Drift Compensation and Foot Pedal for Engine Speed Control. *The Cab Accessories Package is required via Individual Factory Option if option ordered without package.	$795	30%	$556.50

Part Number	Comfort Cab Packages Description	SLP In US $	Discount %	Discounted Price
	MUST SELECT ONE COMFORT AND ONE PERFORMANCE PACKAGE OR SELECT INDIVIUAL OPTIONS			
M_-P07-C10	C10 Comfort Package Includes: Open Cab, Cab Accessories Package, Standard Panel, Adjustable Suspension Seat	$495	30%	$346.50
M_-P07-C23	C23 Comfort Package Includes: Enclosed Cab with AC/Heat, Sound Reduction, Cab Accessories Package, Standard Panel, Adjustable Suspension Seat	$4,752	30%	$3,326.40
M_-P07-C27	C27 Comfort Package Includes: Enclosed Cab with AC/Heat, Sound Reduction, Cab Accessories Package, Standard Panel, Radio, Heated Cloth Air Ride Suspension Seat	$5,725	30%	$4,007.50
M_-P07-C37	C37 Comfort Package Includes: Enclosed Cab with AC/Heat, Sound Reduction, Cab Accessories Package, Deluxe Instrument Panel with Keyless Start, Radio, Heated Cloth Air Ride Suspension Seat	$6,435	30%	$4,504.50

S595 (Tier 4)
Bobcat Compact Skid Loader

Part Number	Performance Cab Packages Description	SLP in US $	Discount %	Discounted Price
	MUST SELECT ONE COMFORT AND ONE PERFORMANCE PACKAGE OR SELECT INDIVIUAL OPTIONS			
	Standard Flow Packages:			
M0247-P06-P20	P20 Performance Package Includes: 2-Speed	$0	30%	$0.00
M0247-P06-P22	P22 Performance Package Includes: Power Bob-Tach, 2-Speed	$860	30%	$602.00
M0247-P06-P24	P24 Performance Package Includes: Power Bob-Tach, 2-Speed, Hydraulic Bucket Positioning, Automatic Ride Control	$2,159	30%	$1,511.30
M0247-P06-P29	P29 Performance Package Includes: Power Bob-Tach, Attachment Control Kit, 2-Speed, Hydraulic Bucket Positioning, Automatic Ride Control, Reversing Fan	$3,020	30%	$2,114.00
	High Flow Packages:			
M0247-P06-P68	P68 Performance Package Includes: Power Bob-Tach, Attachment Control Kit, High Flow, 2-Speed, Hydraulic Bucket Positioning, Automatic Ride Control	$4,279	30%	$2,995.30
M0247-P06-P69	P69 Performance Package Includes: Power Bob-Tach, Attachment Control Kit, High Flow, 2-Speed, Hydraulic Bucket Positioning, Automatic Ride Control, Reversing Fan	$4,895	30%	$3,426.50

Part Number	Individual Factory Options Description	SLP in US $	Discount %	Discounted Price
	CANNOT BE ADDED TO ANY ORDER WITH COMFORT AND PERFORMANCE PACKAGE SELECTION			
	NOTE: Individual Options SLP includes a 20% premium when compared to ordering the option in a package			
	NOTE: Several individual options may require additional equipment, see details below. If the option requires additional equipment the Bobcat ordering systems will automatically add the required equipment to the order.			
	Individual Cab Options			
M_-R25-C04	Enclosed Cab With AC/Heat Deluxe cab with heat and air conditioning	$4,535	30%	$3,174.50
M_-R25-C03	Enclosed Cab With Heat Deluxe cab with heat	$2,677	30%	$1,873.90
M_-R70-C02	Sound Reduction Reduces operator and by-stander noise levels	$574	30%	$401.80
M_-R08-C03	Deluxe Instrument Panel with Keyless Start Monitors key loader functions, communicates alerts and provides additional attachment information to track usage.	$852	30%	$596.40
M_-R26-C02	Radio Includes weatherproof AM/FM/NOAA Weather Band Radio, Speakers, and Antenna. Works with MP3 or other portable music player. The Cab Accessories Package is required. See NOTE above.	$598	30%	$418.60
M_-R80-C02	Cab Accessories Package Deluxe Headliner with Dome Light, Cab Accessory Harness, Power Port, Lower Interior Panels with Storage Compartments and Cup Holder. Required for Reversing Fan, Hydraulic Bucket Positioning, Automatic Ride Control, and SJC, Radio, Air Ride Heated Seat, Power Bob-Tach. Required for Reversing Fan, Hydraulic Bucket Positioning, Automatic Ride Control, and SJC, Radio, Air Ride Heated Seat, Power Bob-Tach	$594	30%	$415.80
M_-R05-C12	Cloth Heated Air Ride Suspension Seat Includes Heat on/off switch on the back of the seat. The Cab Accessories Package is required. See NOTE above.	$570	30%	$399.00

S595 (Tier 4)
Bobcat Compact Skid Loader

Part Number	Individual Factory Option Description	SLP in US $	Discount %	Discounted Price
	Individual Performance Options			
M_-R06-C03	Power Bob-Tach Connect and disconnect non-hydraulic attachments from inside the cab The Cab Accessories Package is required. See NOTE above.	$1,032	30%	$722.40
M_-R28-C02	7-Pin Attachment Control Kit Required for High Flow Hydraulics.	$294	30%	$205.80
M_-R03-C03	High Flow Hydraulics Provides 26.7 GPM and 3500 PSI for attachment operation. The 7-pin attachment control kit is required.	$2,250	30%	$1,575.00
M_-R11-C02	Hydraulic Bucket Positioning Bucket Positioning helps the operator keep the same tilt of the load during lifting. Includes On/Off switch. The Cab Accessories Package is required. See NOTE above.	$670	30%	$469.00
M_-R33-C02	Automatic Ride Control Automatically activates by detecting increased hydraulic lift arm pressure when the loader is carrying material. Includes on/off switch. The Cab Accessories Package is required. See NOTE above.	$889	30%	$622.30
M_-R32-C02	Reversing Fan Temporarily reverses the cooling fan direction to blow dust and small debris from the radiator and rear screens. Includes three operating modes: Automatic, Momentary, & OFF. The Cab Accessories Package is required. See NOTE above.	$739	30%	$517.30

S630/S650 (Tier 4)
Bobcat Compact Skid Loader

Standard Equipment

74.0 HP Turbo Tier 4 Diesel Engine
Auxiliary Hydraulics: Variable Flow
Backup Alarm
Bob-Tach
Bobcat Interlock Control System (BICS ™)
Controls: Bobcat Standard
Cylinder Cushioning – Lift, Tilt
Engine/Hydraulic Systems Shutdown
Glow Plugs (Automatically Activated)
Horn
Instrumentation: Engine Temperature & Fuel Gauges, Hourmeter, RPM and Warning Lights
Lift Arm Support
Lift Path: Radius (S630), Vertical (S650)
Lights, Front & Rear
Operator Cab
- Includes: Adjustable Suspension Seat, Top & Rear Windows, Parking Brake, Seat Bar & Seat Belt
- Roll Over Protective Structure (ROPS) meets SAE-J1040 & ISO 3471
- Falling Object Protective Structure (FOPS) meets SAE-J1043 & ISO 3449, Level I; (Level II is available through Bobcat Parts)

Spark Arrestor Exhaust System
Tires: 12-16.5, 12 PR, Bobcat Heavy Duty (S590)

Quick Specs

	S630	S650
Rated Operating Capacity	2,180 lbs.	2,690 lbs.
Engine Model	2.4L Bobcat Engine	2.4L Bobcat Engine
Engine Fuel	Diesel	Diesel
Engine Cooling	Liquid	Liquid
Horsepower	74	74
Hydraulic Pump Capacity – Standard Flow	23 GPM	23 GPM
Travel Speed	7.1 MPH	7.1 MPH
Travel Speed – 2 Speed with SJC	7.1/12.3 MPH	7.1/12.3 MPH
Operating Weight	7,610 lbs.	8,061 lbs.
Shipping Weight	7,057 lbs.	7,371 lbs.
Cab Height	81.3"	81.3"
Width (w/out Attachment)	72.1"	72.1"
Length (w/out Attachment)	108.4"	108.4"
Wheelbase	45.3"	45.3"
Reach at Maximum Height	21.4"	31.5"
Height to Hinge Pin	121.0"	124.0"

S630/S650 (Tier 4)
Bobcat Compact Skid Loader

Part Number	Skid Steer Loader Description	SLP In US $	Discount %	Discounted Price
M0265	S630 Skid Steer Loader (Equipped with T4 Engine)	$47,025	30%	$32,917.50
M0269	S650 Skid Steer Loader (Equipped with T4 Engine)	$48,624	30%	$34,036.80

Part Number	Machine Configuration Description	SLP In US $	Discount %	Discounted Price
	CAN BE SELECTED WITH PACKAGES OR WITH INDIVIUAL OPTIONS			
	Tires ($595)			
	Set of 4 Tires in Place of Base Equipment			
M026_-R09-C03	12-16.5, 12 Pr, Bobcat Heavy Duty Tires Offset Loader width 68.5"	$92	30%	$64.40
	Controls			
M026_-R01-C04	Selectable Joystick Control (SJC) Features include: Selectable patterns (ISO or H-Pattern), Auto Idle, Horsepower Management, Speed Management, Drive Response, Drift Compensation and Foot Pedal for Engine Speed Control. *The Cab Accessories Package is required via Individual Factory Option if option ordered without package.	$945	30%	$661.50

Part Number	Comfort Cab Packages Description	SLP In US $	Discount %	Discounted Price
	MUST SELECT ONE COMFORT AND ONE PERFORMANCE PACKAGE OR SELECT INDIVIUAL OPTIONS			
M_-P07-C10	C10 Comfort Package Includes: Open Cab, Cab Accessories Package, Standard Panel, Adjustable Suspension Seat	$495	30%	$346.50
M_-P07-C23	C23 Comfort Package Includes: Enclosed Cab with AC/Heat, Sound Reduction, Cab Accessories Package, Standard Panel, Adjustable Suspension Seat	$4,752	30%	$3,326.40
M_-P07-C27	C27 Comfort Package Includes: Enclosed Cab with AC/Heat, Sound Reduction, Cab Accessories Package, Standard Panel, Radio, Heated Cloth Air Ride Suspension Seat	$5,725	30%	$4,007.50
M_-P07-C37	C37 Comfort Package Includes: Enclosed Cab with AC/Heat, Sound Reduction, Cab Accessories Package, Deluxe Instrument Panel with Keyless Start, Radio, Heated Cloth Air Ride Suspension Seat	$6,435	30%	$4,504.50

S630/S650 (Tier 4)
Bobcat Compact Skid Loader

Part Number	Description	Performance Cab Packages	SLP in US $	Discount %	Discounted Price
		MUST SELECT ONE COMFORT AND ONE PERFORMANCE PACKAGE OR SELECT INDIVIUAL OPTIONS			
		Standard Flow Packages:			
M026_-P06-P13	P13 Performance Package		$1,418	30%	$992.60
		Includes: Power Bob-Tach, Hydraulic Bucket Positioning.			
M026_-P06-P22	P22 Performance Package		$2,583	30%	$1,808.10
		Includes: Power Bob-Tach, 2-Speed.			
M026_-P06-P24	P24 Performance Package		$3,882	30%	$2,717.40
		Includes: Power Bob-Tach, 2-Speed, Hydraulic Bucket Positioning, Automatic Ride Control.			
M026_-P06-P29	P29 Performance Package		$4,743	30%	$3,320.10
		Includes: Power Bob-Tach, 7-Pin Attachment Control Kit, 2-Speed, Hydraulic Bucket Positioning, Automatic Ride Control, Reversing Fan.			
7374214 M026_-P06-P39	P39 Performance Package		$5,950	30%	$4,165.00
		Includes: Bob-Dock Ready, Power Bob-Tach, 7-Pin Attachment Control Kit, 2-Speed, Hydraulic Bucket Positioning, Automatic Ride Control, Reversing Fan.			
		High Flow Packages:			
M026_-P06-P68	P68 Performance Package		$6,373	30%	$4,461.10
		Includes: Power Bob-Tach, 7-Pin Attachment Control Kit, High Flow, 2-Speed, Hydraulic Bucket Positioning, Automatic Ride Control.			
M026_-P06-P69	P69 Performance Package		$6,989	30%	$4,892.30
		Includes: Power Bob-Tach, 7-Pin Attachment Control Kit, High Flow, 2-Speed, Hydraulic Bucket Positioning, Automatic Ride Control, Reversing Fan.			
M026_-P06-P79	P79 Performance Package		$8,196	30%	$5,737.20
		Includes: Bob-Dock Ready, Power Bob-Tach, 7-Pin Attachment Control Kit, High Flow, 2-Speed, Hydraulic Bucket Positioning, Automatic Ride Control, Reversing Fan.			

S630/S650 (Tier 4)
Bobcat Compact Skid Loader

Part Number	Description	Individual Factory Options	SLP in US $	Discount %	Discounted Price
		CANNOT BE ADDED TO ANY ORDER WITH COMFORT AND PERFORMANCE PACKAGE SELECTION			
		NOTE: Individual Options SLP includes a 20% premium when compared to ordering the option in a package			
		NOTE: Several individual options may require additional equipment, see details below. If the option requires additional equipment the Bobcat ordering systems will automatically add the required equipment to the order.			
		Individual Cab Options			
M026 -R25-C04	Enclosed Cab With AC/Heat		$4,535	30%	$3,174.50
		Deluxe cab with heat and air conditioning			
M026 -R25-C03	Enclosed Cab With Heat		$2,758	30%	$1,930.60
		Deluxe cab with heat			
M026 -R70-C02	Sound Reduction		$574	30%	$401.80
		Reduces operator and by-stander noise levels			
M026 -R08-C03	Deluxe Instrument Panel with Keyless Start		$852	30%	$596.40
		Monitors key loader functions, communicates alerts and provides additional attachment information to track usage.			
M026 -R26-C02	Radio		$598	30%	$418.60
		Includes weatherproof AM/FM/NOAA Weather Band Radio, Speakers, and Antenna. Works with MP3 or other portable music player. The Cab Accessories Package is required. See NOTE above.			
M026 -R80-C02	Cab Accessories Package		$594	30%	$415.80
		Deluxe Headliner with Dome Light, Cab Accessory Harness, Power Port, Lower Interior Panels with Storage Compartments and Cup Holder. Required for Reversing Fan, Hydraulic Bucket Positioning, Automatic Ride Control, and SJC Radio, Air Ride Heated Seat, Power Bob-Tach, Bob-Dock			
M026 -R05-C12	Cloth Heated Air Ride Suspension Seat		$570	30%	$399.00
		Includes Heat on/off switch on the back of the seat. The Cab Accessories Package is required. See NOTE above.			
		Individual Performance Options			
M026 -R06-C03	Power Bob-Tach		$1,032	30%	$722.40
		Connect and disconnect non-hydraulic attachments from inside the cab. The Cab Accessories Package is required. See NOTE above.			
M026 -R06-C09	Bob-Dock Ready		$2,480	30%	$1,736.00
		Includes Power Bob-Tach, Bob-Dock interface plate, Tee and capped auxiliary hydraulic line within loader lift arm. Connect and disconnect hydraulic attachments from inside the cab. The Cab			
M026 -R28-C02	7-Pin Attachment Control Kit		$294	30%	$205.80
		Required for High Flow Hydraulics.			
M026 -R03-C03	High Flow Hydraulics		$2,695	30%	$1,886.50
		Provides 26.7 GPM and 3500 PSI for attachment operation. The 7-pin attachment control kit is required.			
M026 -R04-C02	2-Speed		$2,068	30%	$1,447.60
		Includes 2-Speed motors and 3-Point Seat Belt. Low Travel Speed 7.1 MPH, High Travel Speed 10.4 MPH			

S630/S650 (Tier 4)
Bobcat Compact Skid Loader

Part Number	Description	Individual Factory Options	SLP in US $	Discount %	Discounted Price
		Individual Performance Options			
M_-R11-C02	Hydraulic Bucket Positioning		$670	30%	$469.00
		Bucket Positioning helps the operator keep the same tilt of the load during lifting. Includes On/Off switch. The Cab Accessories Package is required. See NOTE above.			
M_-R33-C02	Automatic Ride Control		$889	30%	$622.30
		Automatically activates by detecting increased hydraulic lift arm pressure when the loader is carrying material. Includes on/off switch. The Cab Accessories Package is required. See NOTE above.			
M_-R32-C02	Reversing Fan		$739	30%	$517.30
		Temporarily reverses the cooling fan direction to blow dust and small debris from the radiator and rear screens. Includes three operating modes: Automatic, Momentary, & OFF. The Cab Accessories Package is required. See NOTE above.			

S76
Bobcat Skid Steer Loader

Standard Equipment

74.0 HP Tier 4 Turbo Diesel Bobcat Engine V2
Auxiliary Hydraulics: Variable Flow
Backup Alarm
Bob-Tach
Bobcat Interlock Control System (BICS)
Controls: Bobcat Standard
Cylinder Cushioning - Lift, Tilt
Engine/Hydraulic Peformance De-rate Protection
Glow Plugs (Automatically Activated)
Horn
Instrumentation: Keyless Start with
- 5" Display Panel (Rearview Camera Ready) with Engine Temperature & Fuel Gauges, Hourmeter, RPM, Warning Indicators & other vitals

Lift Arm Support
Lift Path: Vertical
Lights, Front & Rear LED
Operator Cab
- Includes: Adjustable Suspension Seat, Top & Rear Windows, Parking Brake, Seat Bar & Seat Belt
- Roll Over Protective Structure (ROPS) meets SAE-J1040 & ISO 3471
- Falling Object Protective Structure (FOPS) meets SAE-J1043 & ISO 3449, Level I; (Level II is available through Bobcat Parts)

Parking Brake: Wedge Brake System
Tires: 12-16.5, 12PR, Bobcat Heavy Duty
Warranty: 2 years, or 2000 hours whichever occurs first

Quick Specs

	S76
Rated Operating Capacity	2,900 lbs.
Engine Model	2.4L Bobcat Engine V2
Engine Fuel/Cooling	Diesel/Cooling
Horsepower	74
Hydraulic Pump Capacity – Standard Flow	23.3 GPM
Hydraulic Pump Capacity – High Flow (Optional)	30.3 GPM
Travel Speed	6.8 MPH (preliminary)
Travel Speed – Two Speed with SJC	6.8/11.8 MPI (preliminary)
Operating Weight	8,615 lbs.
Shipping Weight	7,836 lbs.
Cab Height	82.0"
Width (w/out Attachment)	72.9"
Length (w/out Attachment)	113.9"
Wheelbase	48.3"
Reach at Maximum Height	37.4"
Height to Hinge Pin	128.3"

S76
Bobcat Skid Steer Loader

Part Number	Description	Skid Steer Loader SLP In US $	Discount %	Discounted Price
M0369	S76 Skid Steer Loader	$51,147	30%	$35,802.90

Part Number	Description	Machine Configuration SLP In US $	Discount %	Discounted Price
	CAN BE SELECTED WITH PACKAGES OR WITH INDIVIUAL OPTIONS			
	Tires			
M_-R09-C03	12-16.5, 12 Pr, Bobcat Heavy Duty Tires Offset Loader width 68.5"	$94	30%	$65.69
	Controls			
M_-R01-C04	Selectable Joystick Control (SJC) Features include: Selectable patterns (ISO or H-Pattern), Auto idle, Horsepower Management, Speed Management, Drive Response, Drift Compensation and Foot Pedal for Engine Speed	$964	30%	$674.73

Part Number	Description	Comfort Cab Packages SLP In US $	Discount %	Discounted Price
	MUST SELECT ONE COMFORT AND ONE PERFORMANCE PACKAGE OR SELECT INDIVIUAL OPTIONS			
M_-P07-C40	C40 Comfort Package Includes: Open Cab, Radio Ready, Deluxe Headliner, Adjustable Suspension Seat	$726	30%	$508.51
M_-P07-C52	C52 Comfort Package Includes: Enclosed Cab with HVAC, Sound Reduction, Radio Ready, HVAC Headliner, Adjustable Suspension Seat, Premium LED Lights	$5,157	30%	$3,609.99
M_-P07-C68	C68 Comfort Package Includes: Enclosed Cab with HVAC, Sound Reduction, Touch Display, Heated Cloth Air Ride Suspension Seat, Premium LED Lights, Rear View Camera	$7,372	30%	$5,160.28

Part Number	Description	Performance Cab Packages SLP In US $	Discount %	Discounted Price
	MUST SELECT ONE COMFORT AND ONE PERFORMANCE PACKAGE OR SELECT INDIVIUAL OPTIONS			
	Standard Flow Packages			
M_-P06-P17	P17 Performance Package Includes: Power Bob-Tach, 7-Pin Attachment Control, Dual Direction Bucket Positioning	$2,128	30%	$1,489.35
M_-P06-P22	P22 Performance Package Includes Power Bob-Tach and Two-Speed	$2,635	30%	$1,844.26
M_-P06-P28	P28 Performance Package Includes: Power Bob-Tach, 7-Pin Attachment Control, Two-Speed, Dual Direction Bucket Positioning, Automatic Ride Control	$4,641	30%	$3,248.64
M_-P06-P29	P29 Performance Package Includes: Power Bob-Tach, Attachment Control, Two-Speed, Dual Direction Bucket Positioning, Automatic Ride Control, Reversing Fan	$5,269	30%	$3,688.47

S76
Bobcat Skid Steer Loader

Part Number	Description	Performance Cab Packages SLP In US $	Discount %	Discounted Price
	High Flow Packages			
M_-P06-P68	P68 Performance Package Includes: Power Bob-Tach, 7-Pin Attachment Control, High Flow, Two-Speed, Dual Direction Bucket Positioning, Automatic Ride Control	$6,553	30%	$4,587.06
M_-P06-P69	P69 Performance Package Includes: Power Bob-Tach, 7-Pin Attachment Control, High Flow, Two-Speed, Dual Direction Bucket Positioning, Automatic Ride Control, Reversing Fan	$7,181	30%	$5,026.89

Part Number	Description	Individual Factory Options SLP in US $	Discount %	Discounted Price
	CANNOT BE ADDED TO ANY ORDER WITH COMFORT AND PERFORMANCE PACKAGE SELECTION			
	NOTE: Individual Options SLP includes a 20% premium when compared to ordering the option in a package			
	NOTE: Several individual options may require additional equipment, see details below. If the option requires additional equipment the Bobcat ordering systems will automatically add the required equipment to the order.			
	Individual Cab Options			
M_-R02-C02	Enclosed Cab with Heat only Enclosed Cab with side screens, door, & heater	$2,813	30%	$1,969.21
M_-R02-C03	Enclosed Cab with HVAC Enclosed Cab with side screens, door, & heat and air conditioning	$4,626	30%	$3,237.99
M_-R05-C12	Heated Air Ride Suspension Seat - Cloth Includes Heat on/off switch on the back of the seat.	$581	30%	$406.98
M_-R07-C02	Sound Reduction Reduces operator and by-stander noise levels. Available for Enclosed Cabs Only.	$585	30%	$409.84
M_-R08-C02	Radio Ready Includes Speakers and Antenna. Order Radio Head Unit Kit (Radio & Cradle) 7384580 from Parts.	$150	30%	$104.99
M_-R08-C03	Touch Display 7" Touch Screen Display with Integrated AM/FM Weatherband Radio, Bluetooth, USB Charging and Hands Free calling. Includes speakers and antenna. Monitors key loader functions, communicates alerts and provides additional attachment information to track usage.	$1,806	30%	$1,264.20
M_-R27-C02	Deluxe Headliner Standard Headliner with dome light and location for hands free microphone. Required for Touch Display on Non-Enclosed Cabs.	$86	30%	$60.20
M_-R52-C03	Rear View Camera Compatible with Standard Display OR Touch Display.	$450	30%	$315.00

S76
Bobcat Skid Steer Loader

Part Number	Description	Individual Factory Options SLP in US $	Discount %	Discounted Price
	Individual Performance Options			
M_-R03-C03	High-Flow Hydraulics Provides 30.5 GPM and 3500 PSI for attachment operation. When adding High-Flow Hydraulics the 7-Pin Attachment Control will automatically be added.	$2,749	30%	$1,924.23
M_-R04-C02	Two-Speed Travel Includes Two-Speed Travel motors and 3-Point Seat Belt Low Travel Speed 6.0 MPH, High Travel Speed 8.7 MPH	$2,109	30%	$1,476.55
M_-R06-C03	Power Bob-Tach Connect and disconnect non-hydraulic attachments from inside the cab.	$1,053	30%	$736.85
M_-R11-C02	Dual Direction Bucket Positioning Bucket Positioning helps the operator keep the same tilt of the load during lifting (up) and retracting (down). Includes On/Off switch. This option is only available with the Power Bob-Tach Option.	$1,001	30%	$700.38
M_-R28-C02	7-Pin Attachment Control Electrical connection for selected attachments. Required for High Flow Hydraulics.	$300	30%	$209.92
M_-R32-C02	Reversing Fan Temporarily reverses the cooling fan direction to blow dust and small debris from the radiator and rear screens. Includes three operating modes: Automatic, Momentary and OFF.	$754	30%	$527.65
M_-R33-C02	Automatic Ride Control Automatically activates by detecting increased hydraulic lift arm pressure when the loader is carrying material. Includes on/off switch.	$907	30%	$634.75
M_-R55-C02	Premium LED Lights Front LED Lights with extended corner view lighting	$160	30%	$112.18

S740/S770 (Tier 4)
Bobcat Compact Skid Loader

Standard Equipment

74 HP Turbo Tier 4 Diesel Engine (S740)
92 HP Turbo Tier 4 Diesel Engine (S770)
Air Intake Heater (Automatically Activated)
Auxiliary Hydraulics: Variable Flow
Backup Alarm
Bob-Tach
Bobcat Interlock Control System (BICS ™)
Controls: Bobcat Standard
Cylinder Cushioning – Lift, Tilt
Engine/Hydraulic Systems Shutdown
Horn
Instrumentation: Engine Temperature & Fuel Gauges, Hourmeter, RPM and Warning Lights
Lift Arm Support
Lift Path: Vertical
Lights, Front & Rear
Operator Cab
- Includes: Adjustable Suspension Seat, Top & Rear Windows, Parking Brake, Seat Bar & Seat Belt
- Roll Over Protective Structure (ROPS) meets SAE-J1040 & ISO 3471
- Falling Object Protective Structure (FOPS) meets SAE-J1043 & ISO 3449, Level I; (Level II is available through Bobcat Parts)

Tires: 12-16.5, 12 PR, Bobcat Heavy Duty

Quick Specs

	S740	S770
Rated Operating Capacity	3,100 lbs.	3,350 lbs.
Engine Model	3.4L Bobcat Engine	3.4L Bobcat Engine
Engine Fuel	Diesel	Diesel
Engine Cooling	Liquid	Liquid
Horsepower	74	92
Hydraulic Pump Capacity – Standard Flow	23.0 GPM	23.0 GPM
Travel Speed	7.1 MPH	7.1 MPH
Travel Speed – 2 Speed with SJC	7.1/12.3 MPH	7.1/12.3 MPH
Operating Weight	8,794 lbs.	9,314 lbs.
Shipping Weight	7,917 lbs.	8,428 lbs.
Cab Height	81.3"	81.3"
Width (w/out Attachment)	72.1"	72.1"
Length (w/out Attachment)	114.3"	114.3"
Wheelbase	48.3"	48.3"
Reach at Maximum Height	31.5"	31.5"
Height to Hinge Pin	132"	132"

S740/S770 (Tier 4)
Bobcat Compact Skid Loader

Part Number	Skid Steer Loader Description	SLP In US $	Discount %	Discounted Price
M0275	S740 Skid Steer Loader (Equipped with T4 Engine)	$53,560	30%	$37,492.00
M0283	S770 Skid Steer Loader (Equipped with T4 Engine)	$60,341	30%	$42,238.70

Part Number	Machine Configuration Description	SLP In US $	Discount %	Discounted Price
	CAN BE SELECTED WITH PACKAGES OR WITH INDIVIUAL OPTIONS			
	Tires (S595) *Set of 4 Tires in Place of Base Equipment*			
M_-R09-C03	12-16.5, 12 Pr, Bobcat Heavy Duty Tires Offset Loader width 68.5"	$92	30%	$64.40
	Controls			
M02__-R01-C04	Selectable Joystick Control (SJC) Features include: Selectable patterns (ISO or H-Pattern), Auto Idle, Horsepower Management, Speed Management, Drive Response, Drift Compensation and Foot Pedal for Engine Speed Control. *The Cab Accessories Package is required via Individual Factory Option if option ordered without package.	$945	30%	$661.50

Part Number	Comfort Cab Packages Description	SLP In US $	Discount %	Discounted Price
	MUST SELECT ONE COMFORT AND ONE PERFORMANCE PACKAGE OR SELECT INDIVIUAL OPTIONS			
M_-P07-C10	C10 Comfort Package Includes: Open Cab, Cab Accessories Package, Standard Panel, Adjustable Suspension Seat	$495	30%	$346.50
M_-P07-C23	C23 Comfort Package Includes: Enclosed Cab with AC/Heat, Sound Reduction, Cab Accessories Package, Standard Panel, Adjustable Suspension Seat	$4,752	30%	$3,326.40
M_-P07-C27	C27 Comfort Package Includes: Enclosed Cab with AC/Heat, Sound Reduction, Cab Accessories Package, Standard Panel, Radio, Heated Cloth Air Ride Suspension Seat	$5,725	30%	$4,007.50
M_-P07-C37	C37 Comfort Package Includes: Enclosed Cab with AC/Heat, Sound Reduction, Cab Accessories Package, Deluxe Instrument Panel with Keyless Start, Radio, Heated Cloth Air Ride Suspension Seat	$6,435	30%	$4,504.50

S740/S770 (Tier 4)
Bobcat Compact Skid Loader

Part Number	Performance Cab Packages Description	SLP in US $	Discount %	Discounted Price
	MUST SELECT ONE COMFORT AND ONE PERFORMANCE PACKAGE OR SELECT INDIVIUAL OPTIONS			
	Standard Flow Packages:			
M02_-P06-P13	P13 Performance Package Includes: Power Bob-Tach, Hydraulic Bucket Positioning	$1,418	30%	$992.60
M02_-P06-P22	P22 Performance Package Includes: Power Bob-Tach, 2-Speed	$2,583	30%	$1,808.10
M02_-P06-P24	P24 Performance Package Includes: Power Bob-Tach, 2-Speed, Hydraulic Bucket Positioning, Automatic Ride Control	$3,882	30%	$2,717.40
M02_-P06-P29	P29 Performance Package Includes: Power Bob-Tach, Attachment Control Kit, 2-Speed, Hydraulic Bucket Positioning, Automatic Ride Control, Reversing Fan	$4,743	30%	$3,320.10
7374214 M02_-P06-P39	P39 Performance Package Includes: Bob-Dock Ready, Power Bob-Tach, Attachment Control Kit, 2-Speed, Hydraulic Bucket Positioning, Automatic Ride Control, Reversing Fan	$5,950	30%	$4,165.00
	High Flow Packages:			
M02_-P06-P68	P68 Performance Package Includes: Power Bob-Tach, Attachment Control Kit, High Flow, 2-Speed, Hydraulic Bucket Positioning, Automatic Ride Control	$6,373	30%	$4,461.10
M02_-P06-P69	P69 Performance Package Includes: Power Bob-Tach, Attachment Control Kit, High Flow, 2-Speed, Hydraulic Bucket Positioning, Automatic Ride Control, Reversing Fan	$6,989	30%	$4,892.30
M02_-P06-P79	P79 Performance Package Includes: Bob-Dock Ready, Power Bob-Tach, Attachment Control Kit, High Flow, 2-Speed, Hydraulic Bucket Positioning, Automatic Ride Control, Reversing Fan	$8,196	30%	$5,737.20

S740/S770 (Tier 4)
Bobcat Compact Skid Loader

Part Number	Individual Factory Options Description	SLP in US $	Discount %	Discounted Price
	CANNOT BE ADDED TO ANY ORDER WITH COMFORT AND PERFORMANCE PACKAGE SELECTION *NOTE: Individual Options SLP includes a 20% premium when compared to ordering the option in a package*			
	NOTE: Several individual options may require additional equipment, see details below. If the option requires additional equipment the Bobcat ordering systems will automatically add the required equipment to the order.			
	Individual Cab Options			
M -R25-C04	Enclosed Cab With AC/Heat Deluxe cab with heat and air conditioning	$4,535	30%	$3,174.50
M02 -R25-C03	Enclosed Cab With Heat Deluxe cab with heat	$2,758	30%	$1,930.60
M -R70-C02	Sound Reduction Reduces operator and by-stander noise levels	$574	30%	$401.80
M -R08-C03	Deluxe Instrument Panel with Keyless Start Monitors key loader functions, communicates alerts and provides additional attachment information to track usage.	$852	30%	$596.40
M -R26-C02	Radio Includes weatherproof AM/FM/NOAA Weather Band Radio, Speakers, and Antenna. Works with MP3 or other portable music player. The Cab Accessories Package is required. See NOTE above.	$598	30%	$418.60
M -R80-C02	Cab Accessories Package Deluxe Headliner with Dome Light, Cab Accessory Harness, Power Port, Lower Interior Panels with Storage Compartments and Cup Holder. Required for Reversing Fan, Hydraulic Bucket Positioning, Automatic Ride Control, and SJC, Radio, Air Ride Heated Seat, Power Bob-Tach. Required for Reversing Fan, Hydraulic Bucket Positioning, Automatic Ride Control, and SJC,	$594	30%	$415.80
M -R05-C12	Cloth Heated Air Ride Suspension Seat Includes Heat on/off switch on the back of the seat. The Cab Accessories Package is required. See NOTE above.	$570	30%	$399.00
	Individual Performance Options			
M -R06-C03	Power Bob-Tach Connect and disconnect non-hydraulic attachments from inside the cab The Cab Accessories Package is required. See NOTE above.	$1,032	30%	$722.40
M02 -R06-C09	Bob-Dock Ready Includes Power Bob-Tach, Bob-Dock interface plate, Tee and capped auxiliary hydraulic line within loader lift arm. Connect and disconnect hydraulic attachments from inside the cab. The Cab	$2,480	30%	$1,736.00
M -R28-C02	7-Pin Attachment Control Kit Required for High Flow Hydraulics.	$294	30%	$205.80
M02 -R03-C03	High Flow Hydraulics Provides 26.7 GPM and 3500 PSI for attachment operation. The 7-pin attachment control kit is required.	$2,695	30%	$1,886.50
M -R04-C02	2-Speed Includes 2-Speed motors and 3-Point Seat Belt Low Travel Speed 7.1 MPH, High Travel Speed 10.4 MPH	$2,068	30%	$1,447.60

S740/S770 (Tier 4)
Bobcat Compact Skid Loader

Part Number	Individual Factory Options Description	SLP in US $	Discount %	Discounted Price
	Individual Performance Options			
M_-R11-C02	Hydraulic Bucket Positioning Bucket Positioning helps the operator keep the same tilt of the load during lifting. Includes On/Off switch. The Cab Accessories Package is required. See NOTE above.	$670	30%	$469.00
M_-R33-C02	Automatic Ride Control Automatically activates by detecting increased hydraulic lift arm pressure when the loader is carrying material. Includes on/off switch. The Cab Accessories Package is required. See NOTE above.	$889	30%	$622.30
M_-R32-C02	Reversing Fan Temporarily reverses the cooling fan direction to blow dust and small debris from the radiator and rear screens. Includes three operating modes: Automatic, Momentary, & OFF. The Cab Accessories Package is required. See NOTE above.	$739	30%	$517.30

S850 (Tier 4)
Bobcat Compact Skid Loader

Standard Equipment

100 HP Turbo Tier 4 Diesel Engine (S740)
2-Speed Travel
Air Intake Heater (Automatically Activated)
Auxiliary Hydraulics: Variable Flow
Backup Alarm
Bob-Tach
Bobcat Interlock Control System (BICS ™)
Controls: Bobcat Standard with Power Assist
Cylinder Cushioning – Lift, Tilt
Engine/Hydraulic Systems Shutdown
Horn
Instrumentation: Engine Temperature & Fuel Gauges, Hourmeter, RPM and Warning Lights
Lift Arm Support
Lift Path: Vertical
Lights, Front & Rear
Operator Cab
- Includes: Adjustable Suspension Seat, Top & Rear Windows, Parking Brake, Seat Bar & Seat Belt
- Roll Over Protective Structure (ROPS) meets SAE-J1040 & ISO 3471
- Falling Object Protective Structure (FOPS) meets SAE-J1043 & ISO 3449, Level I; (Level II is available through Bobcat Parts)

Tires: 14-17.5, 14 PR, Bobcat Heavy Duty

Quick Specs

	S850
Rated Operating Capacity	3,950 lbs.
Engine Model	3.4L Bobcat Engine
Engine Fuel	Diesel
Engine Cooling	Liquid
Horsepower	##
Hydraulic Pump Capacity – Standard Flow	23.0 GPM
Travel Speed	7.1 MPH
Travel Speed – 2 Speed with SJC	7.1/12.3 MPH
Operating Weight	10,237 lbs.
Shipping Weight	9,310 lbs.
Cab Height	83.4"
Width (w/out Attachment)	79"
Length (w/out Attachment)	119.3"
Wheelbase	52.9"
Reach at Maximum Height	29.7"
Height to Hinge Pin	144"

S850 (Tier 4)
Bobcat Compact Skid Loader

Part Number	Skid Steer Loader Description	SLP In US $	Discount %	Discounted Price
M0289	S850 Skid Steer Loader (Equipped with T4 Engine)	$70,212	30%	$49,148.40

Part Number	Machine Configuration Description	SLP In US $	Discount %	Discounted Price
	CAN BE SELECTED WITH PACKAGES OR WITH INDIVIUAL OPTIONS			
	Controls			
M02__-R01-C04	Selectable Joystick Control (SJC) Features include: Selectable patterns (ISO or H-Pattern), Auto Idle, Horsepower Management, Speed Management, Drive Response, Drift Compensation and Foot Pedal for Engine Speed Control. *The Cab Accessories Package is required via Individual Factory Option if option ordered without package.	$945	30%	$661.50

Part Number	Comfort Cab Packages Description	SLP In US $	Discount %	Discounted Price
	MUST SELECT ONE COMFORT AND ONE PERFORMANCE PACKAGE OR SELECT INDIVIUAL OPTIONS			
M_-P07-C10	C10 Comfort Package Includes: Open Cab, Cab Accessories Package, Standard Panel, Adjustable Suspension Seat	$495	30%	$346.50
M_-P07-C23	C23 Comfort Package Includes: Enclosed Cab with AC/Heat, Sound Reduction, Cab Accessories Package, Standard Panel, Adjustable Suspension Seat	$4,752	30%	$3,326.40
M_-P07-C27	C27 Comfort Package Includes: Enclosed Cab with AC/Heat, Sound Reduction, Cab Accessories Package, Standard Panel, Radio, Heated Cloth Air Ride Suspension Seat	$5,725	30%	$4,007.50
M_-P07-C37	C37 Comfort Package Includes: Enclosed Cab with AC/Heat, Sound Reduction, Cab Accessories Package, Deluxe Instrument Panel with Keyless Start, Radio, Heated Cloth Air Ride Suspension Seat	$6,435	30%	$4,504.50

S850 (Tier 4)
Bobcat Compact Skid Loader

Part Number	Performance Cab Packages Description	SLP in US $	Discount %	Discounted Price
	MUST SELECT ONE COMFORT AND ONE PERFORMANCE PACKAGE OR SELECT INDIVIUAL OPTIONS			
	Standard Flow Packages:			
M0289-P06-P22	P22 Performance Package Includes: Power Bob-Tach, 2-Speed	$860	30%	$602.00
M0289-P06-P24	P24 Performance Package Includes: Power Bob-Tach, 2-Speed, Hydraulic Bucket Positioning, Automatic Ride Control	$2,159	30%	$1,511.30
M0289-P06-P29	P29 Performance Package Includes: Power Bob-Tach, Attachment Control Kit, 2-Speed, Hydraulic Bucket Positioning, Automatic Ride Control, Reversing Fan	$3,020	30%	$2,114.00
##	***High Flow Packages:***			
M0289-P06-P68	P68 Performance Package Includes: Power Bob-Tach, Attachment Control Kit, High Flow, 2-Speed, Hydraulic Bucket Positioning, Automatic Ride Control	$4,650	30%	$3,255.00
M0289-P06-P69	P69 Performance Package Includes: Power Bob-Tach, Attachment Control Kit, High Flow, 2-Speed, Hydraulic Bucket Positioning, Automatic Ride Control, Reversing Fan	$5,266	30%	$3,686.20
M0289-P06-P69	P69 Performance Package Includes: Power Bob-Tach, Attachment Control Kit, High Flow, 2-Speed, Hydraulic Bucket Positioning, Automatic Ride Control, Reversing Fan	$5,266	30%	$3,686.20

S850 (Tier 4)
Bobcat Compact Skid Loader

Part Number	Description	Individual Factory Options	SLP in US $	Discount %	Discounted Price
		CANNOT BE ADDED TO ANY ORDER WITH COMFORT AND PERFORMANCE PACKAGE SELECTION			
		NOTE: Individual Options SLP includes a 20% premium when compared to ordering the option in a package			
		NOTE: Several individual options may require additional equipment, see details below. If the option requires additional equipment the Bobcat ordering systems will automatically add the required equipment to the order.			
		Individual Cab Options			
M -R25-C04		Enclosed Cab With AC/Heat	$4,535	30%	$3,174.50
		Deluxe cab with heat and air conditioning			
M -R70-C02		Sound Reduction	$574	30%	$401.80
		Reduces operator and by-stander noise levels			
M -R08-C03		Deluxe Instrument Panel with Keyless Start	$852	30%	$596.40
		Monitors key loader functions, communicates alerts and provides additional attachment information to track usage.			
M -R26-C02		Radio	$598	30%	$418.60
		Includes weatherproof AM/FM/NOAA Weather Band Radio, Speakers, and Antenna. Works with MP3 or other portable music player. The Cab Accessories Package is required. See NOTE above.			
M -R05-C12		Cloth Heated Air Ride Suspension Seat	$570	30%	$399.00
		Includes Heat on/off switch on the back of the seat. The Cab Accessories Package is required. See NOTE above.			
		Individual Performance Options			
M -R06-C03		Power Bob-Tach	$1,032	30%	$722.40
		Connect and disconnect non-hydraulic attachments from inside the cab The Cab Accessories Package is required. See NOTE above.			
M -R28-C02		7-Pin Attachment Control Kit	$294	30%	$205.80
		Required for High Flow Hydraulics.			
M02 -R03-C03		High Flow Hydraulics	$2,695	30%	$1,886.50
		Provides 26.7 GPM and 3500 PSI for attachment operation. The 7-pin attachment control kit is required.			
M -R11-C02		Hydraulic Bucket Positioning	$670	30%	$469.00
		Bucket Positioning helps the operator keep the same tilt of the load during lifting. Includes On/Off switch. The Cab Accessories Package is required. See NOTE above.			
M -R33-C02		Automatic Ride Control	$889	30%	$622.30
		Automatically activates by detecting increased hydraulic lift arm pressure when the loader is carrying material. Includes on/off switch. The Cab Accessories Package is required. See NOTE			
M -R32-C02		Reversing Fan	$739	30%	$517.30
		Temporarily reverses the cooling fan direction to blow dust and small debris from the radiator and rear screens. Includes three operating modes: Automatic, Momentary, & OFF. The Cab			

November 7, 2019
BOBCAT SLP Pages

T450 (Tier 4)
Bobcat Compact Track Loader

Standard Equipment

61 HP Turbo Tier 4 Diesel Engine
Auxiliary Hydraulics: Variable Flow
Backup Alarm
Bob-Tach
Bobcat Interlock Control System (BICS TM)
Controls: Bobcat Standard
Engine/Hydraulic Systems Shutdown
Glow Plugs (Automatically Activated)
Horn
Instrumentation: Engine Temperature & Fuel Guages,
- Hourmeter, RPM, and Warning Lights

Lift Arm Support
Lift Path: Radius
Lights, Front & Rear
Operator Cab
- Includes: Adjustable Suspension Seat, Top & Rear Windows, Parking Break, Seat Bar & Seat Belt
- Roll Over Protective Structure (ROPS) meets SAE-J1040 & ISO 3471
- Falling Object Protective Structure (FOPS) meets SAE-J1043 & ISO 3449, Level I; (Level II is available through Bobcat Parts)

Parking Brake – Spring Applied, Pressure Released
Soild Mounted Carriage with 3 Rollers
Spark Arrestor Exhaust System
Tracks: Rubber, 11.8" Wide

Quick Specs

	T450
Rated Operating Capacity - 35% of Tipping Load	1,400 lbs.
Rated Operating Capacity - 50% of Tipping Load	2,000 lbs.
Tipping Load	4,000 lbs.
Engine Model	2.4L Bobcat Engine
Engine Fuel	Diesel
Engine Cooling	Liquid
Horsepower	61
Hydraulic Pump Capacity-Standard Flow	16.7 GPM
Travel Speed	7.3 MPH
Travel Speed - 2 Speed	7.3/11.0 MPH
Operating Weight	6,148 lbs.
Shipping Weight	5,555 lbs.
Cab Height	77.8"
Width (w/out Attachment)	55.0"
Length (w/out Attachment)	98.4"
Ground Contact Length	50.2"
Reach at Maximum Height	23.5"
Height to Hinge Pin	109.5"

T450 (Tier 4)
Bobcat Compact Track Loader

Part Number	Compact Track Loader Description	SLP in US $	Discount %	Discounted Price
M0207	T450 Compact Track Loader (Equipped with a T4 Engine).....	$47,713	30%	$33,399.10

Part Number	Air Conditioned/Heated Cab Packages Description	SLP in US $	Discount %	Discounted Price
M__-P01-A81	A81 Option Package.....	$8,519	30%	$5,963.30
	Includees: Two Speed, Enclosed Cab with AC/Heat, Cab Accessories Package*, Power Bob-Tach, Sound Reduction, Deluxe Instrument Panel with Keyless Start, Attachment Control Kit, 3-Point Seat Belt			

Part Number	Open Cab Packages Description	SLP in US $	Discount %	Discounted Price
M__-P01-O71	O71 Option Package.....	$2,333	30%	$1,633.10
	Includes: Cab Accessories Package*, Power Bob-Tach, Deluxe Instrument Panel with Keyless Start, Attachment Control Kit *Cab Accessories Package: Deluxe Headliner with Dome Light, Cab Accessory Harness, Power Port, Lower Interior Panels with Storage Compartments and Cup Holder.			

Part Number	Factory Installed Options Description	SLP in US $	Discount %	Discounted Price
	Controls			
M_-R01-C04	Selectable Joystick Contol (SJC).....	$795	30%	$556.50
	Features include: Selectable patterns (ISO or H-Pattern), Auto Idle, Horsepower Management, Speed Management, Drive Response, Drift Compensation and Foot Pedal for Engine Speed Control. *The Cab Accessories Package is required via Individual Factory Option if option ordered without package. Management, Drive Response, Drift Compensation and Foot Pedal for Engine Speed Control.			
	The Cab Accessories Package which is included in all Cab Packages is required. If a Cab Package is not ordered the Bobcat ordering systems will automatically add the Cab Accessories Package to the order for...	$495	30%	$346.50
	Must order *O71 Package when ordered with Two Speed.*			
	Other Options			
M_-R04-C02	Cab Accessories Package.....	$594	30%	$415.80
	Deluxe Headliner with Dome Light, Cab Accessory Harness, Power Port, Lower Interior Panels with Storage Compartments and Cup Holder. Required for Reversing Fan, Hydraulic Bucket Positioning, Automatic Ride Control, and SJC, Radio, Air Ride Heated Seat, Power Bob-Tach			
	Must order *SJC when ordered with O71 Package. Not allowed with base machine.*			

T550/T590/T595 (Tier 4)
Bobcat Compact Track Loader

Standard Equipment

66 HP Turbo Tier 4 Diesel Engine (T550/T590)
74 HP Turbo Tier 4 Diesel Engine (T595)
Auxiliary Hydraulics: Variable Flow
Backup Alarm
Bob-Tach
Bobcat Interlock Control System (BICS TM)
Controls: Bobcat Standard
Cylinder Cushioning - Lift, Tilt
Engine/Hydraulic Systems Shutdown
Glow Plugs (Automatically Activated)
Horn
Instrumentation: Engine Temperature & Fuel Guages, Hourmeter, RPM, and Warning Lights
Lift Arm Support
Lift Path: Radius (T550), Vertical (T590/T595)
Lights, Front & Rear
Operator Cab
- Includes: Adjustable Suspension Seat, Top & Rear Windows, Parking Break, Seat Bar & Seat Belt
- Roll Over Protective Structure (ROPS) meets SAE-J1040 & ISO 3471
- Falling Object Protective Structure (FOPS) meets SAE-J1043 & ISO 3449, Level I; (Level II is available through Bobcat Parts)

Parking Brake – Spring Applied, Pressure Released (SAPR)
Soild Mounted Carriage with 4 Rollers
Spark Arrestor Exhaust System
Tracks: Rubber, 12.6" Wide

Quick Specs

	T550	T590	T595
Rated Operating Capacity - 35% of Tipping Load	1,995 lbs.	2,100 lbs.	2,200 lbs.
with Roller Suspension Carriage	1,895 lbs.	1,950 lbs.	2,050 lbs.
Rated Operating Capacity - 50% of Tipping Load	2,850 lbs.	3,000 lbs.	3,142 lbs.
Tipping Load	5,700 lbs.	6,000 lbs.	6,285 lbs.
Engine Model	2.4L Bobcat Engine	2.4L Bobcat Engine	2.4L Bobcat Engine
Engine Fuel	Diesel	Diesel	Diesel
Engine Cooling	Liquid	Liquid	Liquid
Horsepower	66	66	74
Hydraulic Pump Capacity-Standard Flow	17.1 GPM	17.1 GPM	17.1 GPM
Hydraulic Pump Capacity-High Flow (Optional)	26.7 GPM	26.7 GPM	26.7 GPM
Travel Speed	7.1 MPH	7.1 MPH	7.1 MPH
Travel Speed - 2 Speed	7.1/10.4 MPH	7.1/10.4 MPH	7.1/10.4 MPH
Operating Weight	7,557 lbs.	7,822 lbs.	8,055 lbs.
with Roller Suspension Carriage	7,758 lbs.	8,007 lbs.	.
Shipping Weight	6,746 lbs.	7,026 lbs.	7,226 lbs.
Cab Height	77.8"	77.8"	77.8"
Width (w/out Attachment)	67.0"	67.0"	67.0"
Length (w/out Attachment)	104.6"	104.6"	104.6"
Ground Contact Length	54.1"	54.1"	54.1"
Reach at Maximum Height	19.3"	34.9"	34.9"
Height to Hinge Pin	114.5"	119.0"	119.0"

*T595 is equipped with 200 lb. frame mounted counterweights

T550/T590/T595 (Tier 4)
Bobcat Compact Track Loader

Part Number	Compact Track Loader Description	SLP In US $	Discount %	Discounted Price
M0255	T550 Compact Track Loader (Equipped with Tier 4 Engine)	$52,592	30%	$36,814.40
M0263	T590 Compact Track Loader (Equipped with Tier 4 Engine)	$55,818	30%	$39,072.60
M0249	T595 Compact Track Loader (Equipped with Tier 4 Engine)	$56,343	30%	$39,440.10

Part Number	Machine Configuration Description	SLP In US $	Discount %	Discounted Price
	CAN BE SELECTED WITH PACKAGES OR WITH INDIVIUAL OPTIONS			
	Tracks/Undercarriage			
M_-R09-C02	16" C-Pattern Rubber Track Compatible with Solid Mounted or Roller Suspension Carriages. Loader width is 70.1"	$1,566	30%	$1,096.20
M_-R09-C05	12.6" Multi Bar Track Compatible with Solid Mounted or Roller Suspension Carriages. Loader width is 67.0"	$1,566	30%	$1,096.20
M_-R21-C13	Roller Suspension Carriage Includes Solid Mounted Undercarriage and 3 Rollers with Leaf Spring style suspension. Compatible with 12.6" tracks (Loader width 70.0") or 16" tracks (Loader width is 70.1"). Roller suspension carriage is not available with single speed or Performance Package P13	$1,697	30%	$1,187.90
	Controls			
M_-R01-C04	Selectable Joystick Contol (SJC) Features include: Selectable patterns (ISO or H-Pattern), Auto Idle, Horsepower Management, Speed Management, Drive Response, Drift Compensation and Foot Pedal for Engine Speed Control. *The Cab Accessories Package is required via Individual Factory Option if option ordered without package.	$795	30%	$556.50

Part Number	Comfort Cab Packages Description	SLP In US $	Discount %	Discounted Price
	MUST SELECT ONE COMFORT AND ONE PERFORMANCE PACKAGE OR SELECT INDIVIUAL OPTIONS			
M_-P07-C10	C10 Comfort Package Includes: Open Cab, Cab Accessories Package, Standard Panel, Adjustable Suspension Seat	$495	30%	$346.50
M_-P07-C23	C23 Comfort Package Includes: Enclosed Cab with AC/Heat, Sound Reduction, Cab Accessories Package, Standard Panel, Adjustable Suspension Seat	$4,752	30%	$3,326.40
M_-P07-C27	C27 Comfort Package Includes: Enclosed Cab with AC/Heat, Sound Reduction, Cab Accessories Package, Standard Panel, Radio, Heated Cloth Suspension Seat	$5,725	30%	$4,007.50
M_-P07-C37	C37 Comfort Package Includes: Enclosed Cab with AC/Heat, Sound Reduction, Cab Accessories Package, Deluxe Instrument Panel with Keyless Start, Radio, Heated Cloth Air Ride Suspension Seat	$6,435	30%	$4,504.50

T550/T590/T595 (Tier 4)
Bobcat Compact Track Loader

Part Number	Performance Cab Packages Description	SLP In US $	Discount %	Discounted Price
	MUST SELECT ONE COMFORT AND ONE PERFORMANCE PACKAGE OR SELECT INDIVIUAL OPTIONS			
	Standard Flow Packages			
M_-P06-P13	P13 Performance Package Includes: Power Bob-Tach, Hydraulic Bucket Positioning	$1,418	30%	$992.60
M_-P06-P23	P23 Performance Package Includes: Power Bob-Tach, 2-Speed, Hydraulic Bucket Positioning	$3,608	30%	$2,525.60
M_-P06-P29	P29 Performance Package Includes: Power Bob-Tach, 7-Pin Attachment Control Kit, 2-Speed, Hydraulic Bucket Positioning, Automatic Ride Control, Reversing Fan	$5,210	30%	$3,647.00
	High Flow Packages			
M_-P06-P67	P67 Performance Package Includes: Power Bob-Tach, 7-Pin Attachment Control Kit, High Flow, 2-Speed, Hydraulic Bucket Positioning	$5,728	30%	$4,009.60
M_-P06-P69	P69 Performance Package Includes: Power Bob-Tach, 7-Pin Attachment Control Kit, High Flow, 2-Speed, Hydraulic Bucket Positioning, Automatic Ride Control, Reversing Fan	$7,085	30%	$4,959.50

Part Number	Individual Factory Options Description	SLP in US $	Discount %	Discounted Price
	CANNOT BE ADDED TO ANY ORDER WITH COMFORT AND PERFORMANCE PACKAGE SELECTION *NOTE: Individual Options SLP includes a 20% premium when compared to ordering the option in a package* NOTE: Several individual options may require additional equipment, see details below. If the option requires additional equipment the Bobcat ordering systems will automatically add the required equipment to the order.			
	Individual Cab Options			
M_-R25-C04	Enclosed Cab with AC/Heat Deluxe cab with heat and air conditioning	$4,535	30%	$3,174.50
M_-R70-C02	Sound Reduction Reduces operator and by-stander noise levels	$574	30%	$401.80
M_-R08-C03	Deluxe Instrument Panel with Keyless Start Monitors key loader functions, communicates alerts and provides additional attachment information to track usage.	$852	30%	$596.40
M_-R26-C02	Radio Includes weatherproof AM/FM/NOAA Weather Band Radio, Speakers, and Antenna. Works with MP3 or other portable music player	$598	30%	$418.60
M_-R80-C02	Cab Accessories Package Deluxe Headliner with Dome Light, Cab Accessory Harness, Power Port, Lower Interior Panels with Storage Compartments and Cup Holder. Required for Reversing Fan, Hydraulic Bucket Positioning, Automatic Ride Control, and SJC, Radio, Air Ride Heated Seat, Power Bob-Tach	$594	30%	$415.80
M_-R05-C12	Cloth Heated Air Ride Suspension Seat Includes Heat on/off switch on the back of the seat.	$570	30%	$399.00

T550/T590/T595 (Tier 4)
Bobcat Compact Track Loader

	Individual Performance Options			
M_-R06-C03	Power Bob-Tach Connect and disconnect non-hydraulic attachments from inside the cab. The Cab Accessories Package is required. See NOTE above.	$1,032	30%	$722.40
M_-R28-C02	7-Pin Attachment Control Kit Required for High Flow Hydraulics.	$294	30%	$205.80
M_-R03-C03	High Flow Hydraulics Provides 26.7 GPM and 3500 PSI for attachment operation. The 7-pin attachment control kit is required.	$2,695	30%	$1,886.50
M_-R04-C02	2-Speed Includes 2-Speed motors and 3-Point Seat Belt□ Low Travel Speed 7.1 MPH, High Travel Speed 10.4 MPH	$2,628	30%	$1,839.60
M_-R11-C02	Hydraulic Bucket Positioning Bucket Positioning helps the operator keep the same tilt of the load during lifting. Includes On/Off switch. The Cab Accessories Package is require. See NOTE above.	$670	30%	$469.00
M_-R33-C02	Automatic Ride Control Automatically activates by detecting increased hydraulic lift arm pressure when the loader is carrying material. Includes on/off switch. The Cab Accessories Package is require. See NOTE above.	$889	30%	$622.30
M_-R32-C02	Reversing Fan Temporarily reverses the cooling fan direction to blow dust and small debris from the radiator and rear screens. Includes three operating modes: Automatic, Momentary, & OFF. The Cab Accessoreis Package is required. See NOTE above.	$739	30%	$517.30

T630/T650 (Tier 4)
Bobcat Compact Track Loader

Standard Equipment

74 HP Turbo Tier 4 Diesel Engine
Auxiliary Hydraulics: Variable Flow
Backup Alarm
Bob-Tach
Bobcat Interlock Control System (BICS TM)
Controls: Bobcat Standard
Cylinder Cushioning - Lift, Tilt
Engine/Hydraulic Systems Shutdown
Glow Plugs (Automatically Activated)
Horn
Instrumentation: Engine Temperature & Fuel Gauges, Hourmeter, RPM, and Warning Lights
Lift Arm Support
Lift Path: Radius (T630), Vertical (T650)
Lights, Front & Rear
Operator Cab
- Includes: Adjustable Suspension Seat, Top & Rear Windows, Parking Break, Seat Bar & Seat Belt
- Roll Over Protective Structure (ROPS) meets SAE-J1040 & ISO 3471
- Falling Object Protective Structure (FOPS) meets SAE-J1043 & ISO 3449, Level I; (Level II is available through Bobcat Parts)

Parking Brake – Spring Applied, Pressure Released (SAPR)
Soild Mounted Carriage with 4 Rollers
Spark Arrestor Exhaust System
Tracks: Rubber, 12.6" Wide

Quick Specs

	T630	T650
Rated Operating Capacity - 35% of Tipping Load	2,100 lbs.	2,570 lbs.
- with Roller Suspension Carriage	2,000 lbs.	2,470 lbs.
Rated Operating Capacity - 50% of Tipping Load	3,000 lbs.	3,670 lbs.
Tipping Load	6,000 lbs.	7,343 lbs.
Engine Model	2.4L Bobcat Engine	2.4L Bobcat Engine
Engine Fuel	Diesel	Diesel
Engine Cooling	Liquid	Liquid
Horsepower	74	74
Hydraulic Pump Capacity-Standard Flow	23.0 GPM	23.0 GPM
Hydraulic Pump Capacity-High Flow (Optional)	30.5 GPM	30.5 GPM
Travel Speed	6.0 MPH	6.0 MPH
Travel Speed - 2 Speed	6.0/8.7 MPH	6.0/8.7 MPH
Operating Weight	8,555 lbs.	9,133 lbs.
- with Roller Suspension Carriage	8,748 lbs.	9,339 lbs.
Shipping Weight	7,632 lbs.	8,190 lbs.
Cab Height	81.3"	81.3"
Width (w/out Attachment)	72.9"	72.9"
Width with Wide Track Option (w/out Attachment)	78.0"	78.0"
Length (w/out Attachment)	108.4"	108.4"
Ground Contact Length	58.5"	58.5"
Reach at Maximum Height	24.1"	34.2"
Height to Hinge Pin	121.0"	124.0"

T630/T650 (Tier 4)
Bobcat Compact Track Loader

Part Number	Compact Track Loader Description	SLP In US $	Discount %	Discounted Price
M0267	T630 Compact Track Loader (Equipped with Tier 4 Engine)	$59,704	30%	$41,792.80
M0271	T650 Compact Track Loader (Equipped with Tier 4 Engine)	$61,993	30%	$43,395.10

Part Number	Machine Configuration Description	SLP In US $	Discount %	Discounted Price
	CAN BE SELECTED WITH PACKAGES OR WITH INDIVIUAL OPTIONS			
	Tracks/Undercarriage			
M_-R09-C02	17.7" C-Pattern Rubber Track Compatible with Solid Mounted or Roller Suspension Carriages. Loader width is 78.0"	$1,628	30%	$1,139.60
M_-R09-C05	17.7" Multi Bar Track Compatible with Solid Mounted or Roller Suspension Carriages. Loader width is 78.0"	$1,628	30%	$1,139.60
M_-R21-C13	Roller Suspension Carriage Includes Solid Mounted Undercarriage and 4 Rollers with Leaf Spring style suspension. Compatible with 12.6" tracks (Loader width 73.4") or 17.7" tracks (Loader width is 78.0"). Roller suspension carriage is not available with single speed or Performance Package P13	$1,785	30%	$1,249.50
	Controls			
M_-R01-C04	Selectable Joystick Contol (SJC) Features include: Selectable patterns (ISO or H-Pattern), Auto Idle, Horsepower Management, Speed Management, Drive Response, Drift Compensation and Foot Pedal for Engine Speed Control. *The Cab Accessories Package is required via Individual Factory Option if option ordered without package.	$945	30%	$661.50

Part Number	Comfort Cab Packages Description	SLP In US $	Discount %	Discounted Price
	MUST SELECT ONE COMFORT AND ONE PERFORMANCE PACKAGE OR SELECT INDIVIUAL OPTIONS			
M_-P07-C10	C10 Comfort Package Includes: Open Cab, Cab Accessories Package, Standard Panel, Adjustable Suspension Seat	$495	30%	$346.50
M_-P07-C23	C23 Comfort Package Includes: Enclosed Cab with AC/Heat, Sound Reduction, Cab Accessories Package, Standard Panel, Adjustable Suspension Seat	$4,752	30%	$3,326.40
M_-P07-C27	C27 Comfort Package Includes: Enclosed Cab with AC/Heat, Sound Reduction, Cab Accessories Package, Standard Panel, Radio, Heated Cloth Suspension Seat	$5,725	30%	$4,007.50
M_-P07-C37	C37 Comfort Package Includes: Enclosed Cab with AC/Heat, Sound Reduction, Cab Accessories Package, Deluxe Instrument Panel with Keyless Start, Radio, Heated Cloth Air Ride Suspension Seat	$6,435	30%	$4,504.50

T630/T650 (Tier 4)
Bobcat Compact Track Loader

Part Number	Performance Cab Packages Description	SLP In US $	Discount %	Discounted Price
	MUST SELECT ONE COMFORT AND ONE PERFORMANCE PACKAGE OR SELECT INDIVIUAL OPTIONS			
	Standard Flow Packages			
M_-P06-P13	P13 Performance Package Includes: Power Bob-Tach, Hydraulic Bucket Positioning	$1,418	30%	$992.60
M_-P06-P23	P23 Performance Package Includes: Power Bob-Tach, 2-Speed, Hydraulic Bucket Positioning	$3,608	30%	$2,525.60
M_-P06-P29	P29 Performance Package Includes: Power Bob-Tach, 7-Pin Attachment Control Kit, 2-Speed, Hydraulic Bucket Positioning, Automatic Ride Control, Reversing Fan	$5,210	30%	$3,647.00
M_-P06-P39	P39 Performance Package Includes: Bob-Dock Ready, Power Bob-Tach, Attachment Control Kit, 2-Speed, Hydraulic Bucket Positioning, Automatic Ride Control, Rreversing Fan	$6,417	30%	$4,491.90
	High Flow Packages			
M_-P06-P67	P67 Performance Package Includes: Power Bob-Tach, 7-Pin Attachment Control Kit, High Flow, 2-Speed, Hydraulic Bucket Positioning	$6,099	30%	$4,269.30
M_-P06-P69	P69 Performance Package Includes: Power Bob-Tach, 7-Pin Attachment Control Kit, High Flow, 2-Speed, Hydraulic Bucket Positioning, Automatic Ride Control, Reversing Fan	$7,456	30%	$5,219.20
M_-P06-P79	P79 Performance Package Includes: Bob-Dock Ready, Power Bob-Tach, Attachment Control Kit, High Flow, 2-Speed, Hydraulic Bucket Positioning, Automatic Ride Control, Reversing Fan	$8,663	30%	$6,064.10

Part Number	Individual Factory Options Description	SLP in US $	Discount %	Discounted Price
	CANNOT BE ADDED TO ANY ORDER WITH COMFORT AND PERFORMANCE PACKAGE SELECTION *NOTE: Individual Options SLP includes a 20% premium when compared to ordering the option in a package*			
	NOTE: Several individual options may require additional equipment, see details below. If the option requires additional equipment the Bobcat ordering systems will automatically add the required equipment to the order.			
	Individual Cab Options			
M_-R25-C04	Enclosed Cab with AC/Heat Deluxe cab with heat and air conditioning	$4,535	30%	$3,174.50
M_-R70-C02	Sound Reduction Reduces operator and by-stander noise levels	$574	30%	$401.80
M_-R08-C03	Deluxe Instrument Panel with Keyless Start Monitors key loader functions, communicates alerts and provides additional attachment information to track usage.	$852	30%	$596.40
M_-R26-C02	Radio Includes weatherproof AM/FM/NOAA Weather Band Radio, Speakers, and Antenna. Works with MP3 or other portable music player	$598	30%	$418.60
M_-R80-C02	Cab Accessories Package Deluxe Headliner with Dome Light, Cab Accessory Harness, Power Port, Lower Interior Panels with Storage Compartments and Cup Holder. Required for Reversing Fan, Hydraulic Bucket Positioning, Automatic Ride Control, and SJC, Radio, Air Ride Heated Seat, Power Bob-Tach	$594	30%	$415.80
M_-R05-C12	Cloth Heated Air Ride Suspension Seat Includes Heat on/off switch on the back of the seat.	$570	30%	$399.00

T630/T650 (Tier 4)
Bobcat Compact Track Loader

	Individual Performance Options			
M_-R06-C03	Power Bob-Tach Connect and disconnect non-hydraulic attachments from inside the cab. The Cab Accessories Package is required. See NOTE above.	$1,032	30%	$722.40
M_-R06-C09	Bob-Dock Ready Includes Power Bob-Tach, Bob-Dock interface plate, Tee and capped auxiliary hydraulic line within loader lift arm. Connect and disconnect hydraulic attachments from inside the cab.	$2,480	30%	$1,736.00
M_-R28-C02	7-Pin Attachment Control Kit Required for High Flow Hydraulics.	$294	30%	$205.80
M_-R03-C03	High Flow Hydraulics Provides 26.7 GPM and 3500 PSI for attachment operation. The 7-pin attachment control kit is required.	$2,695	30%	$1,886.50
M_-R04-C02	2-Speed Includes 2-Speed motors and 3-Point Seat Belt Low Travel Speed 7.1 MPH, High Travel Speed 10.4 MPH	$2,628	30%	$1,839.60
M_-R11-C02	Hydraulic Bucket Positioning Bucket Positioning helps the operator keep the same tilt of the load during lifting. Includes On/Off switch. The Cab Accessories Package is require. See NOTE above.	$670	30%	$469.00
M_-R33-C02	Automatic Ride Control Automatically activates by detecting increased hydraulic lift arm pressure when the loader is carrying material. Includes on/off switch. The Cab Accessories Package is require. See NOTE	$889	30%	$622.30
M_-R32-C02	Reversing Fan Temporarily reverses the cooling fan direction to blow dust and small debris from the radiator and rear screens. Includes three operating modes: Automatic, Momentary, & OFF. The Cab Accessoreis Package is required. See NOTE above.	$739	30%	$517.30

T76
Bobcat Compact Track Loader

Standard Equipment

74.0 HP Tier 4 Turbo Diesel Bobcat Engine V2
Auxiliary Hydraulics: Variable Flow
Backup Alarm
Bob-Tach
Bobcat Interlock Control System (BICS TM)
Controls: Selectable Joystic Controls
Cylinder Cushioning - Lift, Tilt
Engine/Hydraulic Peformance De-rate Protection
Glow Plugs (Automatically Activated)
Horn
Instrumentation: Keyless Start with
- 5" Display Panel (Rear View Camera Ready) with Engine Temperature & Fuel Gauges, Hourmeter, RPM, Warning Indicators & other vitals

Lift Arm Support
Lift Path: Vertical
Lights, Front & Rear LED
Operator Cab
- Includes: Adjustable Suspension Seat, Top & Rear Windows, Parking Brake, Seat Bar & Seat Belt
- Roll Over Protective Structure (ROPS) meets SAE-J1040 & ISO 3471
- Falling Object Protective Structure (FOPS) meets SAE-J1043 & ISO 3449, Level I; (Level II is available through Bobcat Parts)

Parking Brake: Spring Applied, Pressure Released (SAPR)
Solid Mounted Carriage with 4 Rollers
Tracks: Rubber, 12.6" Wide
Warranty: 2 years, or 2000 hours whichever occurs first

Quick Specs

	T76
Rated Operating Capacity - 35% of Tipping Load	2,900 lbs.
- with Torsion Suspension Carriage	2,800 lbs.
Rated Operating Capacity - 50% of Tipping Load	4,143 lbs.
Tipping Load	8,286 lbs.
Engine Model	2.4L Bobcat Engine V2
Engine Fuel/Cooling	Diesel/Liquid
Horsepower	74
Hydraulic Pump Capacity-Standard Flow	23.0 GPM
Hydraulic Pump Capacity-High Flow (Optional)	30.3 GPM
Travel Speed	6.8 MPH (preliminary)
Travel Speed - Two Speed	6.8/9.2 MPH (preliminary)
Operating Weight	10,693 lbs.
- with Torsion Suspension Carriage	0
Shipping Weight	9,870 lbs.
Cab Height	82.0"
Width (w/out Attachment)	72.9"
- with Torsion Suspension	74.3"
Width with Wide Track Option (w/out Attachment)	78.0"
- with Torsion Suspension	78.0"
Length (w/out Attachment)	113.9"
Ground Contact Length	60.1"
Reach at Maximum Height	37.4"
Height to Hinge Pin	128.3"

T76
Bobcat Compact Track Loader

Part Number	Compact Track Loader Description	SLP In US $	Discount %	Discounted Price
M0371	T76 Compact Track Loader	$67,366		

Part Number	Machine Configuration Description	SLP In US $	Discount %	Discounted Price
	CAN BE SELECTED WITH PACKAGES OR WITH INDIVIUAL OPTIONS			
	Tracks/Undercarriage			
M_-R09-C02	17.7" C-Pattern Rubber Track Compatible with Solid Mounted or Torsion Suspension Carriages. Loader width is 78.0"	$1,661	30%	$1,162.39
M_-R09-C05	17.7" Multi Bar Track Compatible with Solid Mounted or Torsion Suspension Carriages. Loader width is 78.0"	$1,661	30%	$1,162.39
M_-R21-C13	5-Link Torsion Suspension Undercarriage 5-Link Torsion Suspension Undercarriage. Compatible with 12.6" tracks (Loader width 73.4") or 17.7" tracks (Loader width 78.0") *Two-Speed Travel is required and will be automatically added.	$2,482	30%	$1,737.11

Part Number	Comfort Packages Description	SLP In US $	Discount %	Discounted Price
	MUST SELECT ONE COMFORT AND ONE PERFORMANCE PACKAGE OR SELECT INDIVIUAL OPTIONS			
M_-P07-C40	C40 Comfort Package Includes: Open Cab, Radio Ready, Deluxe Headliner, Adjustable Suspension Seat	$726	30%	$508.51
M_-P07-C52	C52 Comfort Package Includes: Enclosed Cab with HVAC, Sound Reduction, Radio Ready, HVAC Headliner, Adjustable Suspension Seat, Premium LED Lights	$5,157	30%	$3,609.99
M_-P07-C68	C68 Comfort Package Includes: Enclosed Cab with HVAC, Sound Reduction, Touch Display, Heated Cloth Air Ride Suspension Seat, Premium LED Lights, Rear View Camera	$7,372	30%	$5,160.28
M_-P07-C77	C77 Comfort Package Includes: Clear Side Enclosed Cab with Auto HVAC, Sound Reduction, Radio Ready, Heated Cloth Suspension Seat, Premium LED Lights	$7,280	30%	$5,095.72
M_-P07-C88	C88 Comfort Package Includes: Clear Side Enclosed Cab with HVAC, Sound Reduction, Touch Display, Heated Cloth Air Ride Suspension Seat, Premium LED Lights, Rear View Camera	$9,010	30%	$6,306.74

Part Number	Performance Packages Description	SLP In US $	Discount %	Discounted Price
	MUST SELECT ONE COMFORT AND ONE PERFORMANCE PACKAGE OR SELECT INDIVIUAL OPTIONS			
	Standard Flow Packages			
M_-P06-P17	P17 Performance Package Includes: Power Bob-Tach, 7-Pin Attachment Control, Dual Direction Bucket Positioning	$2,128	30%	$1,489.35
M_-P06-P27	P27 Performance Package Includes: Power Bob-Tach, 7-Pin Attachment Control, Two-Speed Travel, Dual Direction Bucket Positioning	$4,361	30%	$3,053.00
M_-P06-P29	P29 Performance Package Includes: Power Bob-Tach, 7-Pin Attachment Control, Two-Speed Travel, Dual Direction Bucket Positioning, Automatic Ride Control, Reversing Fan	$5,745	30%	$4,021.75

T76
Bobcat Compact Track Loader

Part Number	Performance Packages Description	SLP In US $	Discount %	Discounted Price
	High Flow Packages			
M_-P06-P67	P67 Performance Package Includes: Power Bob-Tach, 7-Pin Attachment Control, Two-Speed Travel, High Flow, Dual Direction Bucket Positioning	$6,274	30%	$4,391.59
M_-P06-P69	P69 Performance Package Includes: Power Bob-Tach, 7-Pin Attachment Control, High Flow, Two-Speed Travel, Dual Direction Bucket Positioning, Automatic Ride Control, Reversing Fan	$7,658	30%	$5,360.33

Part Number	Individual Factory Options Description	SLP in US $	Discount %	Discounted Price
	CANNOT BE ADDED TO ANY ORDER WITH COMFORT AND PERFORMANCE PACKAGE SELECTION			
	NOTE: Individual Options SLP includes a 20% premium when compared to ordering the option in a package			
	NOTE: Several individual options may require additional equipment, see details below. If the option requires additional equipment the Bobcat ordering systems will automatically add the required equipment to the order.			
	Individual Cab Options			
M_-R02-C02	Enclosed Cab with Heat only Standard Enclosed cab with side screens, door, & heater	$2,813	30%	$1,969.21
M_-R02-C03	Enclosed Cab with HVAC Standard enclosed cab with side screens, door, & heat and air conditioning	$4,626	30%	$3,237.99
M_-R02-C04	Clear Side Enclosed Cab with Auto HVAC Clear side enclosed cab with heavy duty polycarbonate side windows, auto heat and air conditioning	$6,036	30%	$4,225.43
M_-R05-C12	Heated Air Ride Suspension Seat - Cloth Includes Heat on/off switch on the back of the seat.	$581	30%	$406.98
M_-R07-C02	Sound Reduction Reduces operator and by-stander noise levels. Available on Enclosed Cabs Only.	$585	30%	$409.84
M_-R08-C02	Radio Ready Includes Speakers and Antenna. Order Radio Head Unit Kit (Radio & Cradle) 7384580 from Parts.	$150	30%	$104.99
M_-R08-C03	Touch Display 7" Touch Screen Display with Integrated AM/FM Weatherband Radio, Bluetooth, USB Charging and Hands Free calling. Includes speakers and antenna. Monitors key loader functions, communicates alerts and provides additional attachment information to track usage.	$1,806	30%	$1,264.20
M_-R27-C02	Deluxe Headliner Standard Headliner with cab light and location for hands free microphone. Required for Touch Display on Non-Enclosed Cabs.	$86	30%	$60.12
M_-R52-C03	Rear View Camera Compatible with Standard Display OR Touch Display.	$450	30%	$315.00

T76
Bobcat Compact Track Loader

Part Number	Individual Factory Options Description	SLP in US $	Discount %	Discounted Price
	Individual Performance Options			
M_-R03-C03	High-Flow Hydraulics Provides 30.5 GPM and 3500 PSI for attachment operation. When adding High-Flow Hydraulics the 7-Pin Attachment Control will automatically be added.	$2,749	30%	$1,924.23
M_-R04-C02	Two-Speed Travel Includes Two-Speed Travel motors and 3-Point Seat Belt Low Travel Speed 6.0 MPH, High Travel Speed 8.7 MPH	$2,681	30%	$1,876.39
M_-R06-C03	Power Bob-Tach Connect and disconnect non-hydraulic attachments from inside the cab.	$1,053	30%	$736.85
M_-R11-C02	Dual Direction Bucket Positioning Bucket Positioning helps the operator keep the same tilt of the load during lifting (up) and retracting (down). Includes On/Off switch. This option is only available with the Power Bob-Tach	$1,001	30%	$700.38
M_-R28-C02	7-Pin Attachment Control Electrical connection for selected attachments. Required for High Flow Hydraulics.	$300	30%	$209.92
M_-R32-C02	Reversing Fan Temporarily reverses the cooling fan direction to blow dust and small debris from the radiator and	$754	30%	$527.65
M_-R33-C02	Automatic Ride Control Automatically activates by detecting increased hydraulic lift arm pressure when the loader is carrying material. Includes on/off switch.	$907	30%	$634.75
M_-R55-C02	Premium LED Lights Front LED Lights with extended corner view lighting	$160	30%	$112.18

T740 (Tier 4)
Bobcat Compact Track Loader

Standard Equipment

74 HP Turbo Tier 4 Diesel Engine
Air Intake Heater (Automatically Activated)
Auxiliary Hydraulics: Variable Flow
Backup Alarm
Bob-Tach
Bobcat Interlock Control System (BICS TM)
Controls: Bobcat Standard Controls with Power Assist
Cylinder Cushioning - Lift, Tilt
Engine/Hydraulic Systems Shutdown
Horn
Instrumentation: Engine Temperature & Fuel Guages, Hourmeter, RPM, and Warning Lights
Lift Arm Support
Lift Path: Vertical
Lights, Front & Rear
Operator Cab
- Includes: Adjustable Suspension Seat, Top & Rear Windows, Parking Break, Seat Bar & Seat Belt
- Roll Over Protective Structure (ROPS) meets SAE-J1040 & ISO 3471
- Falling Object Protective Structure (FOPS) meets SAE-J1043 & ISO 3449, Level I; (Level II is available through Bobcat Parts)

Parking Brake – Spring Applied, Pressure Released (SAPR)
Soild Mounted Carriage with 5 Rollers
Tracks: Rubber, 17.7" Wide

Quick Specs

	T740
Rated Operating Capacity - 35% of Tipping Load	3,200 lbs.
- with Roller Suspension Carriage	3,100 lbs.
Rated Operating Capacity - 50% of Tipping Load	4,571 lbs.
Tipping Load	9,143 lbs.
Engine Model	3.4L Bobcat Engine
Engine Fuel	Diesel
Engine Cooling	Liquid
Horsepower	74
Hydraulic Pump Capacity-Standard Flow	23.0 GPM
Hydraulic Pump Capacity-High Flow (Optional)	30.5 GPM
Travel Speed	6.0 MPH
Travel Speed - 2 Speed	6.0/8.3 MPH
Operating Weight	10,263 lbs.
- with Roller Suspension Carriage	10,417 lbs.
Shipping Weight	9,347 lbs.
Cab Height	81.3"
Width (w/out Attachment)	78.0"
Length (w/out Attachment)	114.3"
Ground Contact Length	63.7"
Reach at Maximum Height	33.6"
Height to Hinge Pin	132.0"

T740 (Tier 4)
Bobcat Compact Track Loader

Part Number	Description	SLP In US $	Discount %	Discounted Price
	Compact Track Loader			
M0277	T740 Compact Track Loader (Equipped with Tier 4 Engine)	$68,527	30%	$47,968.90
	Machine Configuration			
	CAN BE SELECTED WITH PACKAGES OR WITH INDIVIUAL OPTIONS			
	Tracks/Undercarriage			
M_-R09-C05	17.7" Multi Bar Track Compatible with Solid Mounted or Roller Suspension Carriages. Loader width is 78.0"	$1,690	30%	$1,183.00
M_-R21-C13	Roller Suspension Carriage Includes Solid Mounted Undercarriage and 4 Rollers with Leaf Spring style suspension. Compatible with 12.6" tracks (Loader width 73.4") or 17.7" tracks (Loader width is 78.0"). Roller suspension carriage is not available with single speed or Performance Package P13	$1,785	30%	$1,249.50
	Controls			
M_-R01-C04	Selectable Joystick Contol (SJC) Features include: Selectable patterns (ISO or H-Pattern), Auto Idle, Horsepower Management, Speed Management, Drive Response, Drift Compensation and Foot Pedal for Engine Speed Control. *The Cab Accessories Package is required via Individual Factory Option if option ordered	$945	30%	$661.50
	Comfort Cab Packages			
	MUST SELECT ONE COMFORT AND ONE PERFORMANCE PACKAGE OR SELECT INDIVIUAL OPTIONS			
M_-P07-C10	C10 Comfort Package Includes: Open Cab, Cab Accessories Package, Standard Panel, Adjustable Suspension Seat	$495	30%	$346.50
M_-P07-C23	C23 Comfort Package Includes: Enclosed Cab with AC/Heat, Sound Reduction, Cab Accessories Package, Standard Panel, Adjustable Suspension Seat	$4,752	30%	$3,326.40
M_-P07-C27	C27 Comfort Package Includes: Enclosed Cab with AC/Heat, Sound Reduction, Cab Accessories Package, Standard Panel, Radio, Heated Cloth Suspension Seat	$5,725	30%	$4,007.50
M_-P07-C37	C37 Comfort Package Includes: Enclosed Cab with AC/Heat, Sound Reduction, Cab Accessories Package, Deluxe Instrument Panel with Keyless Start, Radio, Heated Cloth Air Ride Suspension Seat	$6,435	30%	$4,504.50

T740 (Tier 4)
Bobcat Compact Track Loader

Part Number	Description	SLP In US $	Discount %	Discounted Price
	Performance Cab Packages			
	MUST SELECT ONE COMFORT AND ONE PERFORMANCE PACKAGE OR SELECT INDIVIUAL OPTIONS			
	Standard Flow Packages			
M_-P06-P13	P13 Performance Package Includes: Power Bob-Tach, Hydraulic Bucket Positioning	$1,418	30%	$992.60
M_-P06-P23	P23 Performance Package Includes: Power Bob-Tach, 2-Speed, Hydraulic Bucket Positioning	$3,608	30%	$2,525.60
M_-P06-P29	P29 Performance Package Includes: Power Bob-Tach, 7-Pin Attachment Control Kit, 2-Speed, Hydraulic Bucket Positioning, Automatic Ride Control, Reversing Fan	$5,210	30%	$3,647.00
M_-P06-P39	P39 Performance Package Includes: Bob-Dock Ready, Power Bob-Tach, Attachment Control Kit, 2-Speed, Hydraulic Bucket Positioning, Automatic Ride Control, Reversing Fan	$6,417	30%	$4,491.90
	High Flow Packages			
M_-P06-P67	P67 Performance Package Includes: Power Bob-Tach, 7-Pin Attachment Control Kit, High Flow, 2-Speed, Hydraulic Bucket Positioning	$6,099	30%	$4,269.30
M_-P06-P69	P69 Performance Package Includes: Power Bob-Tach, 7-Pin Attachment Control Kit, High Flow, 2-Speed, Hydraulic Bucket Positioning, Automatic Ride Control, Reversing Fan	$7,456	30%	$5,219.20
M_-P06-P79	P79 Performance Package Includes: Bob-Dock Ready, Power Bob-Tach, Attachment Control Kit, High Flow, 2-Speed, Hydraulic Bucket Positioning, Automatic Ride Control, Reversing Fan	$8,663	30%	$6,064.10
	Individual Factory Options			
	CANNOT BE ADDED TO ANY ORDER WITH COMFORT AND PERFORMANCE PACKAGE SELECTION *NOTE: Individual Options SLP includes a 20% premium when compared to ordering the option in a package*			
	NOTE: Several individual options may require additional equipment, see details below. If the option requires additional equipment the Bobcat ordering systems will automatically add the required equipment to the order.			
	Individual Cab Options			
M_-R25-C04	Enclosed Cab with AC/Heat Deluxe cab with heat and air conditioning	$4,535	30%	$3,174.50
M_-R70-C02	Sound Reduction Reduces operator and by-stander noise levels	$574	30%	$401.80
M_-R08-C03	Deluxe Instrument Panel with Keyless Start Monitors key loader functions, communicates alerts and provides additional attachment information to track usage.	$852	30%	$596.40
M_-R26-C02	Radio Includes weatherproof AM/FM/NOAA Weather Band Radio, Speakers, and Antenna. Works with MP3 or other portable music player	$598	30%	$418.60
M_-R05-C12	Cloth Heated Air Ride Suspension Seat Includes Heat on/off switch on the back of the seat.	$570	30%	$399.00

T740 (Tier 4)
Bobcat Compact Track Loader

	Individual Performance Options			
M_-R06-C03	Power Bob-Tach Connect and disconnect non-hydraulic attachments from inside the cab. The Cab Accessories Package is required. See NOTE above.	$1,032	30%	$722.40
M_-R06-C09	Bob-Dock Ready Includes Power Bob-Tach, Bob-Dock interface plate, Tee and capped auxiliary hydraulic line within loader lift arm. Connect and disconnect hydraulic attachments from inside the cab.	$2,480	30%	$1,736.00
M_-R28-C02	7-Pin Attachment Control Kit Required for High Flow Hydraulics.	$294	30%	$205.80
M_-R03-C03	High Flow Hydraulics Provides 26.7 GPM and 3500 PSI for attachment operation. The 7-pin attachment control kit is required.	$2,695	30%	$1,886.50
M_-R04-C02	2-Speed Includes 2-Speed motors and 3-Point Seat Belt□ Low Travel Speed 7.1 MPH, High Travel Speed 10.4 MPH	$2,628	30%	$1,839.60
M_-R11-C02	Hydraulic Bucket Positioning Bucket Positioning helps the operator keep the same tilt of the load during lifting. Includes On/Off switch. The Cab Accessories Package is require. See NOTE above.	$670	30%	$469.00
M_-R33-C02	Automatic Ride Control Automatically activates by detecting increased hydraulic lift arm pressure when the loader is carrying material. Includes on/off switch. The Cab Accessories Package is require. See NOTE	$889	30%	$622.30
M_-R32-C02	Reversing Fan Temporarily reverses the cooling fan direction to blow dust and small debris from the radiator and rear screens. Includes three operating modes: Automatic, Momentary, & OFF. The Cab Accessoreis Package is required. See NOTE above.	$739	30%	$517.30

T770 (Tier 4)
Bobcat Compact Track Loader

Standard Equipment

92 HP Turbo Tier 4 Diesel Engine
Air Intake Heater (Automatically Activated)
Auxiliary Hydraulics: Variable Flow
Backup Alarm
Bob-Tach
Bobcat Interlock Control System (BICS TM)
Controls: Bobcat Standard Controls
Cylinder Cushioning - Lift, Tilt
Engine/Hydraulic Systems Shutdown
Horn
Instrumentation: Engine Temperature & Fuel Guages
Hourmeter, RPM, and Warning Lights
Lift Arm Support
Lift Path: Vertical
Lights, Front & Rear
Operator Cab
- Includes: Adjustable Suspension Seat, Top & Rear Windows, Parking Break, Seat Bar & Seat Belt
- Roll Over Protective Structure (ROPS) meets SAE-J1040 & ISO 3471
- Falling Object Protective Structure (FOPS) meets SAE-J1043 & ISO 3449, Level I; (Level II is available through Bobcat Parts)

Parking Brake – Spring Applied, Pressure Released (SAPR)
Solid Mounted Carriage with 5 Rollers
Tracks: Rubber, 17.7" Wide

Quick Specs

	T770
Rated Operating Capacity - 35% of Tipping Load	3,475 lbs.
- with Roller Suspension Carriage	3,325 lbs.
Rated Operating Capacity - 50% of Tipping Load	4,960 lbs.
Tipping Load	9,929 lbs.
Engine Model	3.4L Bobcat Engine
Engine Fuel	Diesel
Engine Cooling	Liquid
Horsepower	92
Hydraulic Pump Capacity-Standard Flow	23.0 GPM
Hydraulic Pump Capacity-High Flow (Optional)	36.6 GPM
Travel Speed	6.0 MPH
Travel Speed - 2 Speed	6.0/9.3 MPH
Operating Weight	10,465 lbs.
- with Roller Suspension Carriage	10,573 lbs.
Shipping Weight	9,534 lbs.
Cab Height	81.3"
Width (w/out Attachment)	78.0"
Length (w/out Attachment)	114.3"
Ground Contact Length	63.7"
Reach at Maximum Height	33.6"
Height to Hinge Pin	132.0"

T770 (Tier 4)
Bobcat Compact Track Loader

Part Number	Compact Track Loader Description	SLP In US $	Discount %	Discounted Price
M0285	T770 Compact Track Loader (Equipped with Tier 4 Engine)	$73,101	30%	$51,170.70

Part Number	Machine Configuration Description	SLP In US $	Discount %	Discounted Price
	CAN BE SELECTED WITH PACKAGES OR WITH INDIVIUAL OPTIONS			
	Tracks/Undercarriage			
M_-R09-C05	17.7" Multi Bar Track Compatible with Solid Mounted or Roller Suspension Carriages. Loader width is 78.0"	$1,690	30%	$1,183.00
M_-R21-C13	Roller Suspension Carriage Includes Solid Mounted Undercarriage and 4 Rollers with Leaf Spring style suspension. Compatible with 12.6" tracks (Loader width 73.4") or 17.7" tracks (Loader width is 78.0"). Roller suspension carriage is not available with single speed or Performance Package P13	$1,785	30%	$1,249.50
	Controls			
M_-R01-C04	Selectable Joystick Contol (SJC) Features include: Selectable patterns (ISO or H-Pattern), Auto Idle, Horsepower Management, Speed Management, Drive Response, Drift Compensation and Foot Pedal for Engine Speed Control. *The Cab Accessories Package is required via Individual Factory Option if option ordered	$945	30%	$661.50

Part Number	Comfort Cab Packages Description	SLP In US $	Discount %	Discounted Price
	MUST SELECT ONE COMFORT AND ONE PERFORMANCE PACKAGE OR SELECT INDIVIUAL OPTIONS			
M_-P07-C10	C10 Comfort Package Includes: Open Cab, Cab Accessories Package, Standard Panel, Adjustable Suspension Seat	$495	30%	$346.50
M_-P07-C23	C23 Comfort Package Includes: Enclosed Cab with AC/Heat, Sound Reduction, Cab Accessories Package, Standard Panel, Adjustable Suspension Seat	$4,752	30%	$3,326.40
M_-P07-C27	C27 Comfort Package Includes: Enclosed Cab with AC/Heat, Sound Reduction, Cab Accessories Package, Standard Panel, Radio, Heated Cloth Suspension Seat	$5,725	30%	$4,007.50
M_-P07-C37	C37 Comfort Package Includes: Enclosed Cab with AC/Heat, Sound Reduction, Cab Accessories Package, Deluxe Instrument Panel with Keyless Start, Radio, Heated Cloth Air Ride Suspension Seat	$6,435	30%	$4,504.50

T770 (Tier 4)
Bobcat Compact Track Loader

Part Number	Performance Cab Packages Description	SLP In US $	Discount %	Discounted Price
	MUST SELECT ONE COMFORT AND ONE PERFORMANCE PACKAGE OR SELECT INDIVIUAL OPTIONS			
	Standard Flow Packages			
M_-P06-P13	P13 Performance Package Includes: Power Bob-Tach, Hydraulic Bucket Positioning	$1,418	30%	$992.60
M_-P06-P23	P23 Performance Package Includes: Power Bob-Tach, 2-Speed, Hydraulic Bucket Positioning	$3,608	30%	$2,525.60
M_-P06-P29	P29 Performance Package Includes: Power Bob-Tach, 7-Pin Attachment Control Kit, 2-Speed, Hydraulic Bucket Positioning, Automatic Ride Control, Reversing Fan	$5,210	30%	$3,647.00
M_-P06-P39	P39 Performance Package Includes: Bob-Dock Ready, Power Bob-Tach, Attachment Control Kit, 2-Speed, Hydraulic Bucket Positioning, Automatic Ride Control, Reversing Fan	$6,417	30%	$4,491.90
	High Flow Packages			
M_-P06-P67	P67 Performance Package Includes: Power Bob-Tach, 7-Pin Attachment Control Kit, High Flow, 2-Speed, Hydraulic Bucket Positioning	$6,099	30%	$4,269.30
M_-P06-P69	P69 Performance Package Includes: Power Bob-Tach, 7-Pin Attachment Control Kit, High Flow, 2-Speed, Hydraulic Bucket Positioning, Automatic Ride Control, Reversing Fan	$7,456	30%	$5,219.20
M_-P06-P79	#N/A #N/A	#N/A	30%	#N/A

Part Number	Individual Factory Options Description	SLP in US $	Discount %	Discounted Price

CANNOT BE ADDED TO ANY ORDER WITH COMFORT AND PERFORMANCE PACKAGE SELECTION

NOTE: Individual Options SLP includes a 20% premium when compared to ordering the option in a package

NOTE: Several individual options may require additional equipment, see details below. If the option requires additional equipment the Bobcat ordering systems will automatically add the required equipment to the order.

Individual Cab Options

M_-R25-C04	Enclosed Cab with AC/Heat Deluxe cab with heat and air conditioning	$4,535	30%	$3,174.50
M_-R70-C02	Sound Reduction Reduces operator and by-stander noise levels	$574	30%	$401.80
M_-R08-C03	Deluxe Instrument Panel with Keyless Start Monitors key loader functions, communicates alerts and provides additional attachment information to track usage.	$852	30%	$596.40
M_-R26-C02	Radio Includes weatherproof AM/FM/NOAA Weather Band Radio, Speakers, and Antenna. Works with MP3 or other portable music player	$598	30%	$418.60
M_-R80-C02	Cab Accessories Package Deluxe Headliner with Dome Light, Cab Accessory Harness, Power Port, Lower Interior Panels with Storage Compartments and Cup Holder. Required for Reversing Fan, Hydraulic Bucket Positioning, Automatic Ride Control, and SJC, Radio, Air Ride Heated Seat, Power Bob-Tach	$594	30%	$415.80
M_-R05-C12	Cloth Heated Air Ride Suspension Seat Includes Heat on/off switch on the back of the seat.	$570	30%	$399.00

T770 (Tier 4)
Bobcat Compact Track Loader

Individual Performance Options

M_-R06-C03	Power Bob-Tach Connect and disconnect non-hydraulic attachments from inside the cab. The Cab Accessories Package is required. See NOTE above.	$1,032	30%	$722.40
M_-R06-C09	Bob-Dock Ready Includes Power Bob-Tach, Bob-Dock interface plate, Tee and capped auxiliary hydraulic line within loader lift arm. Connect and disconnect hydraulic attachments from inside the cab.	$2,480	30%	$1,736.00
M_-R28-C02	7-Pin Attachment Control Kit Required for High Flow Hydraulics.	$294	30%	$205.80
M_-R03-C03	High Flow Hydraulics Provides 26.7 GPM and 3500 PSI for attachment operation. The 7-pin attachment control kit is required.	$2,695	30%	$1,886.50
M_-R04-C02	2-Speed Includes 2-Speed motors and 3-Point Seat Belt Low Travel Speed 7.1 MPH, High Travel Speed 10.4 MPH	$2,628	30%	$1,839.60
M_-R11-C02	Hydraulic Bucket Positioning Bucket Positioning helps the operator keep the same tilt of the load during lifting. Includes On/Off switch. The Cab Accessories Package is require. See NOTE above.	$670	30%	$469.00
M_-R33-C02	Automatic Ride Control Automatically activates by detecting increased hydraulic lift arm pressure when the loader is carrying material. Includes on/off switch. The Cab Accessories Package is require. See NOTE	$889	30%	$622.30
M_-R32-C02	Reversing Fan Temporarily reverses the cooling fan direction to blow dust and small debris from the radiator and rear screens. Includes three operating modes: Automatic, Momentary, & OFF. The Cab Accessoreis Package is required. See NOTE above.	$739	30%	$517.30

T870 (Tier 4)
Bobcat Compact Track Loader

Standard Equipment

100 HP Turbo Tier 4 Diesel Engine
2-Speed Travel
Air Intake Heater (Automatically Activated)
Auxiliary Hydraulics: Variable Flow
Backup Alarm
Bob-Tach
Bobcat Interlock Control System (BICS TM)
Controls: Bobcat Standard Controls with Power Assist
Cylinder Cushioning - Lift, Tilt
Enclosed Cab with Air Conditioning & Heat
Engine/Hydraulic Systems Shutdown
Horn
Instrumentation: Engine Temperature & Fuel Guages, Hourmeter, RPM, and Warning Lights
Lift Arm Support
Lift Path: Vertical
Lights, Front & Rear
Operator Cab
- Includes: Adjustable Suspension Seat, Top & Rear Windows, Parking Break, Seat Bar & Seat Belt
- Roll Over Protective Structure (ROPS) meets SAE-J1040 & ISO 3471
- Falling Object Protective Structure (FOPS) meets SAE-J1043 & ISO 3449, Level I; (Level II is available through Bobcat Parts)

Parking Brake – Spring Applied, Pressure Released (SAPR)
5 Link Torsion Suspension with 5 Rollers
Hyrdraulic Track Tensioning
Tracks: Rubber, 17.7" Wide

Quick Specs

	T870
Rated Operating Capacity - 35% of Tipping Load	3,650 lbs.
Rated Operating Capacity - 50% of Tipping Load	5,200 lbs.
Tipping Load	10,430 lbs.
Engine Model	3.4L Bobcat Engine
Engine Fuel	Diesel
Engine Cooling	Liquid
Horsepower	100
Hydraulic Pump Capacity-Standard Flow	23.0 GPM
Hydraulic Pump Capacity-High Flow (Optional)	36.6 GPM
Travel Speed - Low	6.0 MPH
Travel Speed - High	9.3 MPH
Operating Weight	12,925 lbs.
Shipping Weight	11,749 lbs.
Cab Height	83.6"
Width (w/out Attachment)	82.8"
Length (w/out Attachment)	119.3"
Ground Contact Length	70.2"
Reach at Maximum Height	36.5"
Height to Hinge Pin	144.0"

T870 (Tier 4)
Bobcat Compact Track Loader

Part Number	Compact Track Loader Description	SLP In US $	Discount %	Discounted Price
M0293	T870 Compact Track Loader (Equipped with Tier 4 Engine)	$90,952	30%	$63,666.40

Part Number	Machine Configuration Description	SLP In US $	Discount %	Discounted Price

CAN BE SELECTED WITH PACKAGES OR WITH INDIVIUAL OPTIONS

Controls

M_-R01-C04	Selectable Joystick Contol (SJC) Features include: Selectable patterns (ISO or H-Pattern), Auto Idle, Horsepower Management, Speed Management, Drive Response, Drift Compensation and Foot Pedal for Engine Speed Control. *The Cab Accessories Package is required via Individual Factory Option if option ordered	$945	30%	$661.50

Part Number	Comfort Cab Packages Description	SLP In US $	Discount %	Discounted Price

MUST SELECT ONE COMFORT AND ONE PERFORMANCE PACKAGE OR SELECT INDIVIUAL OPTIONS

M_-P07-C37	C37 Comfort Package Includes: Enclosed Cab with AC/Heat, Sound Reduction, Cab Accessories Package, Deluxe Instrument Panel with Keyless Start, Radio, Heated Cloth Air Ride Suspension Seat	$2,656	30%	$1,859.20

Part Number	Performance Cab Packages Description	SLP In US $	Discount %	Discounted Price

MUST SELECT ONE COMFORT AND ONE PERFORMANCE PACKAGE OR SELECT INDIVIUAL OPTIONS

Standard Flow Packages

M_-P06-P29	P29 Performance Package Includes: Power Bob-Tach, 7-Pin Attachment Control Kit, 2-Speed, Hydraulic Bucket Positioning, Automatic Ride Control, Reversing Fan	$2,160	30%	$1,512.00

High Flow Packages

M_-P06-P67	P67 Performance Package Includes: Power Bob-Tach, 7-Pin Attachment Control Kit, High Flow, 2-Speed, Hydraulic Bucket Positioning	$3,049	30%	$2,134.30
M_-P06-P69	P69 Performance Package Includes: Power Bob-Tach, 7-Pin Attachment Control Kit, High Flow, 2-Speed, Hydraulic Bucket Positioning, Automatic Ride Control, Reversing Fan	$4,406	30%	$3,084.20

T870 (Tier 4)
Bobcat Compact Track Loader

Part Number	Description	Individual Factory Options SLP in US $	Discount %	Discounted Price
	CANNOT BE ADDED TO ANY ORDER WITH COMFORT AND PERFORMANCE PACKAGE SELECTION			
	NOTE: Individual Options SLP includes a 20% premium when compared to ordering the option in a package			
	NOTE: Several individual options may require additional equipment, see details below. If the option requires additional equipment the Bobcat ordering systems will automatically add the required equipment to the order.			
	Individual Cab Options			
M_-R70-C02	Sound Reduction	$574	30%	$401.80
	Reduces operator and by-stander noise levels			
M_-R08-C03	Deluxe Instrument Panel with Keyless Start	$852	30%	$596.40
	Monitors key loader functions, communicates alerts and provides additional attachment information to track usage.			
M_-R26-C02	Radio	$598	30%	$418.60
	Includes weatherproof AM/FM/NOAA Weather Band Radio, Speakers, and Antenna. Works with MP3 or other portable music player.			
M_-R05-C12	Cloth Heated Air Ride Suspension Seat	$570	30%	$399.00
	Includes Heat on/off switch on the back of the seat.			
	Individual Performance Options			
M_-R28-C02	7-Pin Attachment Control Kit	$294	30%	$205.80
	Required for High Flow Hydraulics.			
M_-R03-C03	High Flow Hydraulics	$2,695	30%	$1,886.50
	Provides 26.7 GPM and 3500 PSI for attachment operation. The 7-pin attachment control kit is required.			
M_-R11-C02	Hydraulic Bucket Positioning	$670	30%	$469.00
	Bucket Positioning helps the operator keep the same tilt of the load during lifting. Includes On/Off switch. The Cab Accessories Package is require. See NOTE above.			
M_-R33-C02	Automatic Ride Control	$889	30%	$622.30
	Automatically activates by detecting increased hydraulic lift arm pressure when the loader is carrying material. Includes on/off switch. The Cab Accessories Package is require. See NOTE			
M_-R32-C02	Reversing Fan	$739	30%	$517.30
	Temporarily reverses the cooling fan direction to blow dust and small debris from the radiator and rear screens. Includes three operating modes: Automatic, Momentary, & OFF. The Cab Accessoreis Package is required. See NOTE above.			

A770 (Tier 4)
Bobcat All-Wheel Steer Loader

Standard Equipment

- 92 HP Turbo Tier 4 Diesel Engine
- 2-Speed Travel
- Air Intake Heater (Automatically Activated)
- Auto Idle Option
- Auxiliary Hydraulics: Variable Flow
- Backup Alarm
- Bobcat Interlock Control System (BICS TM)
- Controls: Joystick Style with Hand Lever and Foot Pedal for Engine Speed Control
- Enclosed Cab with Air Conditioning & Heat
- Engine/Hydraulic Systems Shutdown
- Dual Steering Modes:
  - All-Wheel Steer Mode
  - Skid-Steer Mode
- Horn
- Instrumentation: Engine Temperature & Fuel Gauges,
  - Hourmeter, RPM and Warning Lights
- Lift Arm Support
- Lift Path: Vertical
- Lights, Front & Rear
- Operator Cab
  - Includes: Adjustable Suspension Seat, Top & Rear Windows, Seat Bar & 3-Point Seat Belt
  - Roll Over Protective Structure (ROPS) meets SAE-J1040 & ISO 3471
  - Falling Object Protective Structure (FOPS) meets SAE-J1043 & ISO 3449, Level I; (Level II is available through Bobcat Parts)
- Parking Brake – Spring Applied, Pressure Released
- Power Bob-Tach
- Tires: 12-16.5, 12 PR, Bobcat Heavy Duty

Quick Specs

	A770
Rated Operating Capacity	3,325 lbs.
Engine Model	3.4L Bobcat Engine
Engine Fuel	Diesel
Engine Cooling	Liquid
Horsepower	92
Hydraulic Pump Capacity-Standard Flow	23.0 GPM
Hydraulic Pump Capacity-High Flow (Optional)	36.6 GPM
Travel Speed	
- Low Range/High Range	7.1/12.3 MPH
- Maximum Reverse	7.1 MPH
Operating Weight	9,623 lbs.
Shipping Weight	8,754 lbs.
Cab Height	81.3"
Width (w/out Attachment)	74.7"
Length (w/out Attachment)	114.3"
Wheelbase	48.3"
Reach at Maximum Height	31.5"
Height to Hinge Pin	132.0"

A770 (Tier 4)
Bobcat All-Wheel Steer Loader

Part Number	All-Wheel Steer Loader Description	SLP in US $	Discount %	Discounted Price
M0287	A770 Skid Steer Loader (Equipped with T4 Engine).....	$74,601	30%	$52,220.70

Part Number	Machine Configuration Description	SLP in US $	Discount %	Discounted Price
	CAN BE SELECTED WITH PACKAGES OR WITH INDIVIUAL OPTIONS			
	Tires *Set of 4 Tires in Place of Base Equipment*			
M_-R09-C06	33 x 15.5-16.5, 12 PR, Bobcat Super Float Tires- Offset Rims..... Loader width 80.4"	$961	30%	$672.70
M_-R09-C12	33 x 15.5-16.5, 12 PR, Turf and Sand Tires..... Loader width 80.4"	$1,011	30%	$707.70

Part Number	Comfort Cab Packages Description	SLP in US $	Discount %	Discounted Price
	MUST SELECT ONE COMFORT AND ONE PERFORMANCE PACKAGE OR SELECT INDIVIUAL OPTIONS			
M_-P07-C23	C23 Comfort Package..... Includes: Enclosed Cab with AC/Heat, Sound Reduction, Cab Accessories Package, Standard Panel, Adjustable Suspension Seat	$973	30%	$681.10
M_-P07-C27	C27 Comfort Package..... Includes: Enclosed Cab with AC/Heat, Sound Reduction, Cab Accessories Package, Standard Panel, Radio, Heated Cloth Suspension Seat	$1,946	30%	$1,362.20
M_-P07-C37	C37 Comfort Package..... Includes: Enclosed Cab with AC/Heat, Sound Reduction, Cab Accessories Package, Deluxe Instrument Panel with Keyless Start, Radio, Heated Cloth Air Ride Suspension Seat	$2,656	30%	$1,859.20

A770 (Tier 4)
Bobcat All-Wheel Steer Loader

Part Number	Performance Cab Packages Description	SLP in US $	Discount %	Discounted Price
	MUST SELECT ONE COMFORT AND ONE PERFORMANCE PACKAGE OR SELECT INDIVIUAL OPTIONS			
	Standard Flow Packages:			
M_-P06-P22	P22 Performance Package Includes: Power Bob-Tach, 2-Speed	$0	30%	$0.00
M_-P06-P24	P24 Performance Package Includes: Power Bob-Tach, 2-Speed, Hydraulic Bucket Positioning, Automatic Ride Control	$1,299	30%	$909.30
M_-P06-P29	P29 Performance Package Includes: Power Bob-Tach, Attachment Control Kit, 2-Speed, Hydraulic Bucket Positioning, Automatic Ride Control, Reversing Fan	$2,160	30%	$1,512.00
M_-P06-P39	P39 Performance Package Includes: Bob-Dock Ready, Power Bob-Tach, Attachment Control Kit, 2-Speed, Hydraulic Bucket Positioning, Automatic Ride Control, Reversing Fan	$4,227	30%	$2,958.90
	High Flow Packages:			
M_-P06-P68	P68 Performance Package Includes: Power Bob-Tach, Attachment Control Kit, High Flow, 2-Speed, Hydraulic Bucket Positioning, Automatic Ride Control	$3,790	30%	$2,653.00
M_-P06-P69	P69 Performance Package Includes: Power Bob-Tach, Attachment Control Kit, High Flow, 2-Speed, Hydraulic Bucket Positioning, Automatic Ride Control, Reversing Fan	$4,406	30%	$3,084.20
M_-P06-P79	P79 Performance Package Includes: Bob-Dock Ready, Power Bob-Tach, Attachment Control Kit, High Flow, 2-Speed, Hydraulic Bucket Positioning, Automatic Ride Control, Reversing Fan	$6,473	30%	$4,531.10

Part Number	Individual Factory Options Description	SLP in US $	Discount %	Discounted Price
	CANNOT BE ADDED TO ANY ORDER WITH COMFORT AND PERFORMANCE PACKAGE SELECTION			
	NOTE: Individual Options SLP includes a 20% premium when compared to ordering the option in a package			
	NOTE: Several individual options may require additional equipment, see details below. If the option requires additional equipment the Bobcat ordering systems will automatically add the required equipment to the order.			
	Individual Cab Options			
M_-R70-C02	Sound Reduction Reduces operator and by-stander noise levels	$574	30%	$401.80
M_-R08-C03	Deluxe Instrument Panel with Keyless Start Monitors key loader functions, communicates alerts and provides additional attachment information to track usage.	$852	30%	$596.40
M_-R26-C02	Radio Includes weatherproof AM/FM/NOAA Weather Band Radio, Speakers, and Antenna. Works with MP3 or other portable music player	$598	30%	$418.60
M_-R05-C12	Cloth Heated Air Ride Suspension Seat Includes Heat on/off switch on the back of the seat.	$570	30%	$399.00

A770 (Tier 4)
Bobcat All-Wheel Steer Loader

Part Number	Individual Factory Options Description	SLP in US $	Discount %	Discounted Price
	Individual Performance Options			
M_-R06-C09	Bob-Dock Ready Includes Power Bob-Tach, Bob-Dock interface plate, Tee and capped auxiliary hydraulic line	$2,480	30%	$1,736.00
M_-R28-C02	7-Pin Attachment Control Kit Required for High Flow Hydraulics.	$294	30%	$205.80
M_-R03-C03	High Flow Hydraulics Provides 26.7 GPM and 3500 PSI for attachment operation. The 7-pin attachment control kit is required.	$2,695	30%	$1,886.50
M_-R11-C02	Hydraulic Bucket Positioning Bucket Positioning helps the operator keep the same tilt of the load during lifting. Includes On/Off switch.	$670	30%	$469.00
M_-R33-C02	Automatic Ride Control Automatically activates by detecting increased hydraulic lift arm pressure when the loader is carrying material. Includes on/off switch.	$889	30%	$622.30
M_-R32-C02	Reversing Fan Temporarily reverses the cooling fan direction to blow dust and small debris from the radiator and rear screens. Includes three operating modes: Automatic, Momentary, & OFF	$739	30%	$517.30

Bobcat

Part Number	Angle Brooms Description	SLP in US$	Discount Percent	Labor	Price
	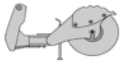				
(S70) (L23, L28)					
6907000	48" Angle Broom (Manual Angle, 3-Positions: 30° Right, Left and Straight)	$3,470.00	24%	$0.00	$2,637.20
(S450 S510, S550, S530, S570, S590, S595) (S630, S650, S740, S750, S770) (T450, T550, T590, T595) (A770) (T630, T650, T740, T750, T770)					
6905805	68" Angle Broom (Loader must be equipped with an Attachment Control Kit) (When used on loaders equipped with a 14-Pin Attachment Control Kit, a 14-Pin Attachment T-Harness Kit is required)	$5,613.00	24%	$0.00	$4,265.88
(S510, S550, S550H, S530, S530H, S570, S570H, S590, S590H, S595, S595H) (S630, S650, S740, S750, S770, S850) (A770) (T550, T550H, T590, T590H, T595, T595H) (T630, T650, T740, T750, T770, T870)					
6905806	84" Angle Broom (Loader must be equipped with an Attachment Control Kit) (When used on loaders equipped with a 14-Pin Attachment Control Kit, a 14-Pin Attachment T-Harness Kit is required)	$6,114.00	24%	$0.00	$4,646.64

Part Number	Augers Description	SLP in US$	Discount Percent	Labor	Price
(MT50, MT52, MT55, MT85) (S70, S100, S130, S150, S160, S175, S185, S205) (S450) (T110, T140) (T450) (L23, L28)					
6808799	**Model 10 Auger Drive Unit** (Must also order Mounting Frame and Bit) (Must order mounting frame, light duty bit and swing stop kit when installing on MT50 and MT52)	$1,453.00	24%	$0.00	$1,104.28
(S100, S130, S150, S160, S175, S185, S205) (S450*, S510*, S530*, S550*, S570*, S590*, S595*, S630*, S650*, S740*,S750*, S770*, S850*) (A770*) (T110, T140, T180, T190, T250, T300, T320) (T450*, T550*, T590*, T595*, T630*, T650*, T740*, T740H*, T750*, T770*, T870*)					
6809442	**Model 15C Auger Drive Unit** (Must also order Mounting Frame and Bit) (Auger drive unit is shipped with a 7/8" round bit retention pin, if used in conjunction with a hex bit a 5/8" Pin Kit P/N 6809733 is required.)	$1,781.00	24%	$0.00	$1,353.56
7145345	**Model 15H Hex Shaft Auger Drive Unit** (Must also order Mounting Frame and Bit)	$1,781.00	24%	$0.00	$1,353.56
6809445	**Model 30C Auger Drive Unit** (Must also order Mounting Frame and Bit) (Auger drive unit is shipped with a 7/8" round bit retention pin, if used in conjunction with a hex bit a 5/8" Pin Kit P/N 6809733 is required.)	$2,328.00	24%	$0.00	$1,769.28
7138264	**Model 30H Hex Shaft Auger Drive Unit** (Must also order Mounting Frame and Bit)	$2,328.00	24%	$0.00	$1,769.28
(S510, S530, S550, S570, S590, S595, S630, S650, S740, S740H, S750, S770, S850) (A770)(T550, T590, T595, T630, T650, T740, T750, T770, T870)					
7220280	**Model 35PH Planetary Auger Drive Unit** (Must also order Mounting Frame and Bit)	$3,644.00	24%	$0.00	$2,769.44
(S550H, S570H, S590H, S595H, S630, S650, S740, S740H, S750, S770, S850) (A770)(T550H, T590H, T595H, T630, T650, T740, T750, T770, T870)					
7227984	**Model 50PH Planetary Auger Drive Unit** (Must also order Mounting Frame and Bit)	$4,172.00	24%	$0.00	$3,170.72

Part Number	Augers Description	SLP in US$	Discount Percent	Labor	Price
6812946	**Mounting Frame, (S70)(MT50-MT55, MT85)** (Includes Mounting Hardware)	$486.00	24%	$0.00	$369.36
(S450-S595, S630-S850, A770, T450, T550, T590, T595, T630, T650, T740, T750, T770, T870)					
6812980	**AUGER 15C/H, 30C/H MOUNTING FRAME** (Includes Mounting Hardware)	$412.00	24%	$0.00	$313.12
(S510 - S850, A770, T550 - T870)					
7223507	**35PH/50PH Mounting Frame,** (Includes Mounting Hardware)	$491.00	24%	$0.00	$373.16

Auger Drive & Bit Recommendations

Model 10 Augers—Recommended bit size 6, 9", 12", 15", 16", 18"
Model 15C and 30C Augers—Recommended bit size 6", 9", 12", 15", 18", 24", 30", 36"
Model 15H and 30H Augers—Recommended bit size 6", 9", 12", 15", 18", 24", 30", 36"
Model 35PH and 50PH Augers—Recommended bit size - HD - 8", 12", 18", 24", 30", 36", 48" And Rock Bits - 8", 12", 18", 24", 30"
Light Duty, Standard Duty, Heavy Duty and Rock Bits are Available.
Auger bit combinations should be used as a guideline. Recommendations are based upon average digging conditions.

Part Number	Bob-Tach Mounted Backhoe Description	SLP in US$	Discount Percent	Labor	Price
(S150, S160, S175, S185, S205) (S510, S530, S550, S570, S590, S595) (T180, T190) (T550, T590, T595)					
6906767	**Bob-Tach Mounted Backhoe** (Must also order bucket, see Backhoe Bucket pages) (Loader must be equipped with an Attachment Control Kit) (If installing on loader with 14-Pin Attachment Control, must also order 14-pin Attachment T-Harness P/N 6725381) (Bob-Tach Mounted Backhoe is NOT compatible with Rear Subframes)	$5,316.00	24%	$0.00	$4,040.16

Part Number	Accessories Description	SLP in US$	Discount Percent	Labor	Price
7104321	**Hydraulic Clamp** (Includes cylinder, hoses & pins)(Must also order Auxiliary Hydraulic Kit) (Price includes $225 for installation)	$1,885.00	24%	$225.00	$1,657.60

Part Number	Backhoe Description	SLP in US$	Discount Percent	Labor	Price
(S510, S530, S550, S570, S590, S595) (T550, T590, T595)					
7243518	**7BH Backhoe** (Must also order bucket and Backhoe Mounting Kit)	$12,820.00	24%	$0.00	$9,743.20
(S510, S530, S550, S570, S590, S595, S630, S650) (T550, T590, T595, T630, T650)					
7237275	**9BH Backhoe** (Must also order bucket and Backhoe Mounting Kit)	$13,568.00	24%	$0.00	$10,311.68
(S530, S570, S590, S595, S630, S650, S740, S750, S770, S850) (A770) (T590, T630, T650, T740, T750, T770, T870)					
7130772	**8811 Backhoe** (Must also order Backhoe Mounting Kit, Bobtach Adapter and Bucket. Latch Kit, PN 7235866 also needed when using on S530 when using on S530 thru S590, T550, T590, T595)	$14,453.00	24%	$0.00	$10,984.28

Part Number	Accessories Description	SLP in US$	Discount Percent	Labor	Price
(S510, S530, S550, S570, S590, S595) (T550, T590, T595)					
7228276	**7 BH & 9BH Backhoe Mounting Kit** (Inclc Latch Arm)	$399.00	24%	$180.00	$483.24
(S530, S570, S590, S595, S630, S650, S740, S750, S770, A770, T590, T595, T630, T650, T750, T770)					
7168488	**8811 Backhoe Mounting Kit**	$399.00	24%	$180.00	$483.24
7168932	**Bobtach Adapter Kit (Spacer)** (Required to Mount 8811 Backhoe to Bobcat Loaders)	$692.00	24%	$90.00	$615.92

Part Number	Backhoe Buckets Description	SLP in US$	Discount Percent	Labor	Price
(Bob-Tach Mounted Backhoe X-Change™ Style)					
7333229	12" TRENCHING BUCKET, SMOOTH LIP	$670.00	24%	$0.00	$509.20
7333230	12" TRENCHING BUCKET, 3 WELD-ON TEETH	$670.00	24%	$0.00	$509.20
7333244	16" TRENCHING BUCKET, SMOOTH LIP	$700.00	24%	$0.00	$532.00
7333245	16" TRENCHING BUCKET, 3 WELD-ON TEETH	$700.00	24%	$0.00	$532.00
7333254	20" TRENCHING BUCKET, SMOOTH LIP	$757.00	24%	$0.00	$575.32
7333255	20" TRENCHING BUCKET, 3 WELD-ON TEETH	$757.00	24%	$0.00	$575.32
(M06 Pin-On Style)					
6715495	9" TRENCHING BUCKET, 2 BOLT-ON TEETH	$432.00	24%	$0.00	$328.32
6715496	12" TRENCHING BUCKET, 3 BOLT-ON TEETH	$479.00	24%	$0.00	$364.04
(406 Pin-On Style)					
6715495	9" TRENCHING BUCKET, 2 BOLT-ON TEETH	$432.00	24%	$0.00	$328.32
6715496	12" TRENCHING BUCKET, 3 BOLT-ON TEETH	$479.00	24%	$0.00	$364.04
6715497	16" TRENCHING BUCKET, 3 BOLT-ON TEETH	$526.00	24%	$0.00	$399.76
7409522	18" TRENCHING BUCKET, 4 BOLT-ON TEETH	$541.00	24%	$0.00	$411.16
6715498	20" TRENCHING BUCKET, 4 BOLT-ON TEETH	$571.00	24%	$0.00	$433.96
(7BH/607 X-Change™ Style)					
7333229	12" Trenching Bucket, Smooth Lip	$670.00	24%	$0.00	$509.20
7333230	12" Trenching Bucket, 3 Weld-on Teeth	$670.00	24%	$0.00	$509.20
7333244	16" Trenching Bucket, Smooth Lip	$700.00	24%	$0.00	$532.00
7333245	16" Trenching Bucket, 4 Weld-on Teeth	$700.00	24%	$0.00	$532.00
7333254	20" Trenching Bucket, Smooth Lip	$575.00	24%	$0.00	$437.00
7333255	20" Trenching Bucket, 4 Weld-On Teeth	$575.00	24%	$0.00	$437.00
7333259	24" Trenching Bucket, Smooth Lip	$814.00	24%	$0.00	$618.64
7333260	24" Trenching Bucket, 4 Weld-On Teeth	$814.00	24%	$0.00	$618.64
(709/9BH/8709/811/8811 X-Change™ Style)					
7323832	12" Trenching Bucket, Smooth Lip	$896.00	24%	$0.00	$680.96
7323833	12" Trenching Bucket, 3 Weld-on Teeth	$896.00	24%	$0.00	$680.96
7324829	16" Trenching Bucket, Smooth Lip	$922.00	24%	$0.00	$700.72
7324830	16" Trenching Bucket, 4 Weld-on Teeth	$922.00	24%	$0.00	$700.72
7323841	18" Trenching Bucket, Smooth Lip	$1,010.00	24%	$0.00	$767.60
7323842	18" Trenching Bucket, 4 Weld-On Teeth	$1,010.00	24%	$0.00	$767.60
7323820	20" Trenching Bucket, Smooth Lip	$1,052.00	24%	$0.00	$799.52
7323821	20" Trenching Bucket, 4 Weld-On Teeth	$1,052.00	24%	$0.00	$799.52
7323529	24" Trenching Bucket, Smooth Lip	$1,087.00	24%	$0.00	$826.12
7323530	24" Trenching Bucket, 4 Weld-On Teeth	$1,087.00	24%	$0.00	$826.12
7323822	30" Trenching Bucket, Smooth Lip	$1,211.00	24%	$0.00	$920.36
7323823	30" Trenching Bucket, 5 Weld-On Teeth	$1,211.00	24%	$0.00	$920.36
7323824	36" Trenching Bucket, Smooth Lip	$1,318.00	24%	$0.00	$1,001.68
7323825	36" Trenching Bucket, 6 Weld-On Teeth	$1,318.00	24%	$0.00	$1,001.68
7333657	36" Grading Bucket, No Teeth	$1,247.00	24%	$0.00	$947.72

Part Number	Boring Unit Description	SLP in US$	Discount Percent	Labor	Price

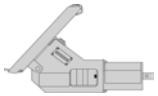

(MT50, MT52, MT55, MT85) (S70) (L23, L28)					
711098	**Boring Unit** (Includes drive unit and guide tool) (Boring Tool Kit is available)	**$2,412.00**	**24%**	**$0.00**	**$1,833.12**

Part Number	Box Blade Description	SLP in US$	Discount Percent	Labor	Price

Box Blade

Box Blade with Laser Receiver

(S510, S550, S530, S570, S590, S595) (S630, S650, S740, S750, S770) (A770) (T450, T550, T590, T595) (T630, T650)					
6906574	**84" Box Blade** (Used for rough grading and landscaping)	**$4,287.00**	**24%**	**$0.00**	**$3,258.12**
(S510, S550, S530, S570, S590, S595) (S630, S650, S740, S750, S770) (A770)(T450, T550, T590, T595) (T630, T650)					
6906676	**84" Box Blade With Laser Mounting** **(Must also order receiver p/n 7160486)** (Approved for use only on BICS loaders.) (Includes integrated laser control) (May also need laser transmitter and tripod—unless customer has this equipment.) (The laser receiver will work with most rotating laser beacons) (Loader must be equipped with an Attachment Control Kit) (If installing on loader with 14-Pin Attachment Control, must also order 14-Pin Attachment T-Harness P/N 7164895)	**$6,626.00**	**24%**	**$0.00**	**$5,035.76**

Part Number	Accessories Description	SLP in US$	Discount Percent	Labor	Price
7275232	**Laser Transmitter, Dual Slope** (**Trimble GL422N**; includes CR600 receiver)	**$2,679.00**	**24%**	**$0.00**	**$2,036.04**
6688806	**Tripod**	**$268.00**	**24%**	**$0.00**	**$203.68**
7160486	**Laser Receiver, BLR2** (For use with Laser Box Blade S/N 627500370 and above). (May also need a laser transmitter and tripod—unless customer has this equipment.) (The laser receivers will work with most rotating laser transmitters. **(Must order 1 for use with laser kit)**	**$2,099.00**	**24%**	**$0.00**	**$1,595.24**

Part Number	Breaker, Hydraulic Description	SLP in US$	Discount Percent	Labor	Price

(MT50, MT52, MT55, MT85) (S70) (L23, L28)

7113419	**HB680 Breaker** (Includes Nail Point, fixing cap bolts, cradle, isolation mount, gauge tool, retainer clip and hose protector) (Must also order Loader Mounting Frame and Hose Kit) (Special Applications Kit must be used when operating a Hydraulic Breaker) (When installing on MT50, must also order Shutdown Kit, p/n 6735945)	**$4,563.00**	**24%**	**$0.00**	**$3,467.88**
	Mounting Frames – HB680				
7113736	**BOB-TACH LOADER MOUNTING FRAME** (Must also order a hose kit, P/N 6727411)	**$649.00**	**24%**	**$0.00**	**$493.24**
7150181	**Loader X-Change Mounting Frame** (Uses X-Change pin-through design) (Must also order Breaker X-Change Mounting Cap p/n 7113656. This allows breaker with X-Change Mounting Cap to be installed on loader) (Must also order a hose kit, P/N 6727411)	**$953.00**	**24%**	**$0.00**	**$724.28**
7113656	**X-Change Mounting Cap**	**$474.00**	**24%**	**$0.00**	**$360.24**
	Accessories – HB680				
6727411	**Hose Kit** (Includes hoses and quick couplers)	**$186.00**	**24%**	**$0.00**	**$141.36**

Part Number	HB880 Breaker Description	SLP in US$	Discount Percent	Labor	Price

(S450, S510, S550, S530, S570, S590, S595) (T450, T550, T590, T595)

7113420	**HB880 Breaker** (Includes Nail Point, flow control valve, fixing cap bolts, cradle, isolation mount, gauge tool, retainer clip and hose protector) (Must also order Loader Mounting Frame and Hose Kit) (Special Applications Kit must be used when operating a Hydraulic Breaker)	**$6,465.00**	**24%**	**$0.00**	**$4,913.40**
	Mounting Frame – HB880				
7113737	**Loader Mounting Frame** (Breaker mounting frame allows for breaking horizontal or vertical surfaces.) (Must also order a hose kit, P/N 7114764)	**$690.00**	**24%**	**$0.00**	**$524.40**
7113738	**Horizontal Loader Mounting Frame** (Recommended mounting frame for horizontal surface breaking only) (Must also order a hose kit, P/N 7114764)	**$732.00**	**24%**	**$0.00**	**$556.32**
7141800	**Loader X-Change Mounting Frame** Allows breaker with X-Change Mounting Cap to be installed on loader, breaker can then be used on excavator and loader. Uses X-Change pin-through design. (Breaker mounting frame allows for breaking horizontal or vertical surfaces) (Must also order Breaker X-Change Mounting Cap P/N 7113657) (Must also order a hose kit, P/N 7114764)	**$1,015.00**	**24%**	**$0.00**	**$771.40**
7113657	**X-Change Mounting Cap**	**$489.00**	**24%**	**$0.00**	**$371.64**
	Accessories – HB880				
7114764	**Hose Kit** (Ship Weight 20 lbs.)	**$211.00**	**24%**	**$0.00**	**$160.36**

Part Number	HB980 Breaker Description	SLP in US$	Discount Percent	Labor	Price

(S450, S510, S550, S530, S570, S590, S595)
(S630*, S650*, S750*, S740*, S770*) (A770*)
(T450, T550, T590, T595) (T630*, T650*, T740*, T750*, T770*)

7113421	**HB980 Breaker** (Includes Nail Point, flow control valve, fixing cap bolts, cradle, isolation mount, gauge tool, retainer clip and hose protector) (Must also order Loader Mounting Frame and Hose Kit) (Special Applications Kit must be used when operating a Hydraulic Breaker) ***Must also order Flow Control Valve Kit, for M-Series p/n 7177744**	**$8,098.00**	**24%**	**$0.00**	**$6,154.48**
	Mounting Frame – HB980				
7113737	**Loader Mounting Frame** (Breaker mounting frame allows for breaking horizontal or vertical surfaces.) (Must also order a hose kit, P/N 7114764)	**$690.00**	**24%**	**$0.00**	**$524.40**
7113738	**Horizontal Loader Mounting Frame** (Recommended mounting frame for horizontal surface breaking only) (Must also order a hose kit, P/N 7114764)	**$732.00**	**24%**	**$0.00**	**$556.32**
7141800	**Loader X-Change Mounting Frame** Allows breaker with X-Change Mounting Cap to be installed on loader, breaker can then be used on excavator and loader. Uses X-Change pin-through design. (Breaker mounting frame allows for breaking horizontal or vertical surfaces) (Must also order Breaker X-Change Mounting Cap P/N 7113657) (Must also order a hose kit, P/N 7114764)	**$1,015.00**	**24%**	**$0.00**	**$771.40**
7113657	**X-Change Mounting Cap**	**$489.00**	**24%**	**$0.00**	**$371.64**
	Accessories – HB980				
7114764	**Hose Kit**	**$211.00**	**24%**	**$0.00**	**$160.36**

Part Number	HB1180 Breaker Description	SLP in US$	Discount Percent	Labor	Price
(S630, S650, S740, S750, S770, S850) (A770)					
(T630, T650, T740, T750, T770, T870)					
7115923	**HB1180 Breaker** (Includes Nail Point, fixing cap bolts, cradle, isolation mount, gauge tool, retainer clip and hose protector) (Must also order Loader Mounting Frame and Hose Kit) (Special Applications Kit must be used when operating a Hydraulic Breaker)	$10,647.00	24%	$0.00	$8,091.72
	Mounting Frame –HB1180				
7115937	**Loader Mounting Frame** (Breaker mounting frame allows for breaking horizontal or vertical surfaces.) (Must also order a hose kit, P/N 7114764)	$788.00	24%	$0.00	$598.88
7117325	**X-Change Mounting Cap**	$571.00	24%	$0.00	$433.96
	Accessories –HB1180				
7114764	**Hose Kit**	$211.00	24%	$0.00	$160.36

Part Number	HB1380 Breaker Description	SLP in US$	Discount Percent	Labor	Price
(S740, S750, S770, S850) (A770)					
(T740, T750, T770, T870)					
7157576	**HB1380 Breaker** (Includes Nail Point, fixing cap bolts, cradle, isolation mount, gauge tool, retainer clip and hose protector) (Must also order Loader Mounting Frame and Hose Kit) (Special Applications Kit must be used when operating a Hydraulic Breaker)	$13,212.00	24%	$0.00	$10,041.12
	Mounting Frame –HB1380				
7115937	**Loader Mounting Frame** (Breaker mounting frame allows for breaking horizontal or vertical surfaces.) (Must also order a hose kit, P/N 7114764)	$788.00	24%	$0.00	$598.88
7117325	**X-Change Mounting Cap**	$571.00	24%	$0.00	$433.96
	Accessories – HB1380				
7114764	**Hose Kit**	$211.00	24%	$0.00	$160.36

Part Number	HB2380 Breaker Description	SLP in US$	Discount Percent	Labor	Price
(S740, S750, S770, S850) (A770) (T740, T750, T770, T870)					
7133203	**HB2380 Breaker** (Includes Nail Point, fixing cap bolts, cradle, isolation mount, and hose protector) (Must also order Loader Mounting Frame and Hose Kit) (Special Applications Kit must be used when operating a Hydraulic Breaker)	$16,236.00	24%	$0.00	$12,339.36
	Mounting Frames –HB2380				
7115937	**Loader Mounting Frame** (Breaker mounting frame allows for breaking horizontal or vertical surfaces.) (Must also order a hose kit, P/N 7114764)	$788.00	24%	$0.00	$598.88
	Accessories – HB2380				
7141851	**Auto-Grease Kit**	$1,901.00	24%	$0.00	$1,444.76
7114764	**Hose Kit**	$211.00	24%	$0.00	$160.36

Part Number	NB140 Breaker, Nitrogen Description	SLP in US$	Discount Percent	Labor	Price
(MT50, MT52, MT55, MT85) (S70) (L23, L28)					
7355666	**NB140 BREAKER** (Includes Nail Point & fixing cap bolts) (Must also order Loader Mounting Frame and Hose Kit) (Special Applications Kit must be used when operating a Hydraulic Breaker (When installing on MT50, must also order Shutdown Kit, p/n 6735945)	$3,777.00	24%	$0.00	$2,870.52
	Mounting Frames –NB140				
7113736	**BOB-TACH LOADER MOUNTING FRAME** (Must also order a hose kit, P/N 6727411)	$649.00	24%	$0.00	$493.24
7272954	**Breaker Frame C3L MT85** (Must also order a hose kit, P/N 6727411)	$666.00	24%	$0.00	$506.16
7150181	**Loader X-Change Mounting Frame** (Uses X-Change pin-through design) (Must also order Breaker X-Change Mounting Cap p/n 7113656. This allows breaker with X-Change Mounting Cap to be installed on loader) (Must also order a hose kit, P/N 6727411)	$953.00	24%	$0.00	$724.28
7113656	**X-Change Mounting Cap**	$474.00	24%	$0.00	$360.24
	Accessories – NB140				
6727411	**Hose Kit**	$186.00	24%	$0.00	$141.36

Part Number	NB150 Breaker, Nitrogen Description	SLP in US$	Discount Percent	Labor	Price
(S450, S510, S530, S550, S570, S590, S595) (T450, T550, T590, T595)					
7234534	**NB150 BREAKER** (Includes Nail Point & fixing cap bolts) (Must also order Loader Mounting Frame and Hose Kit) (Special Applications Kit must be used when operating a Hydraulic Breaker	$5,016.00	24%	$0.00	$3,812.16
	Mounting Frames - NB150				
7113737	**LOADER MOUNTING FRAME** (Breaker mounting frame allows for breaking horizontal or vertical surfaces) (Must also order a hose kit. P/N 7114764)	$690.00	24%	$0.00	$524.40
7113738	**Horizontal Loader Mounting Frame** (Recommended mounting frame for horizontal surface breaking only) (Must also order a hose kit. P/N 7114764)	$732.00	24%	$0.00	$556.32
7141800	**Loader X-Change Mounting Frame** (Allows breaker with X-Change Mounting Cap to be installed on loader, breaker can then be used on excavator and loader. Uses X-Change pin-through design) (Breaker mounting frame allows for breaking horizontal or vertical surfaces) (Must also order Breaker X-Change Mounting Cap P/N 7113657) (Must also order a hose kit, P/N 7114764)	$1,015.00	24%	$0.00	$771.40
7113657	**X-Change Mounting Cap**	$498.00	24%	$0.00	$378.48
	Accessories – NB150				
6727411	**Hose Kit**	$211.00	24%	$0.00	$160.36

Part Number	NB160 Breaker, Nitrogen Description	SLP in US$	Discount Percent	Labor	Price
(S160, S130, S150, S160, S175, S185, S265) (S450, S510, S530, S550, S570, S590, S595, S630, S650, S740, S750, S770) (A770) (T110, T140, T180, T190) (T450, T550, T590, T595, T630, T650, T740, T750, T770)					
7234536	**NB160 Breaker** (Includes Nail Point, & fixing cap bolts) (Must also order Loader Mounting Frame and Hose Kit) (Special Applications Kit must be used when operating a Hydraulic Breaker)	$6,283.00	24%	$0.00	$4,775.08
	Mounting Frame –NB160				
7113737	**Loader Mounting Frame** (Breaker mounting frame allows for breaking horizontal or vertical surfaces.) (Must also order a hose kit, P/N 7114764)	$690.00	24%	$0.00	$524.40
7113738	**Horizontal Loader Mounting Frame** (Recommended mounting frame for horizontal surface breaking only) (Must also order a hose kit, P/N 7114764)	$732.00	24%	$0.00	$556.32
7141800	**Loader X-Change Mounting Frame** (Allows breaker with X-Change Mounting Cap to be installed on loader, breaker can then be used on excavator and loader. Uses X-Change pin-through design) (Breaker mounting frame allows for breaking horizontal or vertical surfaces) (Must also order Breaker X-Change Mounting Cap P/N 7113657) (Must also order a hose kit, P/N 7114764)	$1,015.00	24%	$0.00	$771.40
7113657	**X-Change Mounting Cap**	$498.00	24%	$0.00	$378.48
	Accessories –NB160				
7114764	**Hose Kit**	$211.00	24%	$0.00	$160.36

Part Number	NB170 Breaker, Nitrogen Description	SLP in US$	Discount Percent	Labor	Price
(S630, S650, S740, S750, S770, S850) (A770) (T630, T650, T740, T750, T770, T870)					
7355672	**NB170 Breaker** (Includes Nail Point & fixing cap bolts) (Must also order Loader Mounting Frame and Hose Kit) (Special Applications Kit must be used when operating a Hydraulic Breaker)	$9,568.00	24%	$0.00	$7,271.68
	Mounting Frame –NB170				
7115937	**Loader Mounting Frame** (Breaker mounting frame allows for breaking horizontal or vertical surfaces.) (Must also order a hose kit, P/N 7114764)	$788.00	24%	$0.00	$598.88
7117325	**X-Change Mounting Cap**	$571.00	24%	$0.00	$433.96
	Accessories – NB170				
7114764	**Hose Kit**	$211.00	24%	$0.00	$160.36

Part Number	NB180 Breaker, Nitrogen Description	SLP in US$	Discount Percent	Labor	Price
(S740, S750, S770, S850) (A770) (T740, T750, T770, T870)					
7355674	**NB180 Breaker** (Includes Nail Point & fixing cap bolts) (Must also order Loader Mounting Frame and Hose Kit) (Special Applications Kit must be used when operating a Hydraulic Breaker)	$10,917.00	24%	$0.00	$8,296.92
	Mounting Frames – NB180				
7115937	**Loader Mounting Frame** (Breaker mounting frame allows for breaking horizontal or vertical surfaces.) (Must also order a hose kit, P/N 7114764)	$788.00	24%	$0.00	$598.88
	Accessories – NB180				
7114764	**Hose Kit**	$211.00	24%	$0.00	$160.36

Part Number	Brush Saw Description	SLP in US$	Discount Percent	Labor	Price

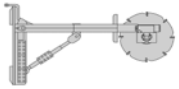

(S450, S510, S550, S530, S570, S590, S595)
(S630, S650, S740, S750, S770, S850) (A770)
(T450, T550, T590, T595) (T630, T650, T740, T750, T770, T870)

7121030	Brush Saw (Special Applications kit must be installed on loader when operating Brush Saw)	$6,923.00	24%	$0.00	$5,261.48

Part Number	Bruschcat Rotary Cutter Description	SLP in US$	Discount Percent	Labor	Price

(S450, S510, S530, S550, S530, S570, S590, S595) (T450, T550, T590, T595)					
7234049	66" Bruskcat Rotary Cutter, Standard Flow (RC66)	$6,400.00	24%	$0.00	$4,864.00
(S550H, S570H, S590H, S595H) (T550H, T590H, T595, T595H)					
7233014	66" Bruskcat Rotary Cutter, High Flow (RC66HF)	$7,180.00	24%	$0.00	$5,456.80
(S510, S530, S550, S570, S590, S595, S630, S650, S740, S750, S770) (A770)					
(T550, T590, T595, T630, T650, T740 T750, T770)					
7218087	72" Bruskcat Rotary Cutter, Standard Flow (RC72)	$6,722.00	24%	$0.00	$5,108.72
(S550H, S570H, S590H, S595H, S630H, S650H, S740H, S750H, S770H) (A770H)					
(T550H, T590H, T595H, T630H, T650H, T740H, T750H, T770H)					
7233002	72" Bruskcat Rotary Cutter, High Flow (RC72HF)	$7,363.00	24%	$0.00	$5,595.88
(S630H, S650H, S740H, S750H, S770H, S850H) (A770H)					
(T630H, T650H, T740H, T750H, T770H, T870H)					
7233092	80" Bruskcat Rotary Cutter, High Flow (RC80)	$7,845.00	24%	$0.00	$5,962.20

Part Number	Buckets Description	SLP in US$	Discount Percent	Labor	Price

(MT55, MT85)					
6731520	36" CONSTR./IND. BUCKET	$555.00	24%	$0.00	$421.80
7117432	36" Dirt Bucket ♦	$529.00	24%	$0.00	$402.04
7117433	44" Dirt Bucket ♦	$561.00	24%	$0.00	$426.36
	(Also Compatible with: L23, L28)				
7114488	36" General Purpose Bucket ♦	$560.00	24%	$0.00	$425.60
7114581	44" General Purpose Bucket ♦	$592.00	24%	$0.00	$449.92
	(Also Compatible with: L23, L28)				
(S70, MT85)					
7117432	36" Dirt Bucket ♦	$529.00	24%	$0.00	$402.04
7117433	44" Dirt Bucket ♦	$561.00	24%	$0.00	$426.36
	(Also Compatible with: L23, L28)				
7114488	36" General Purpose Bucket ♦	$560.00	24%	$0.00	$425.60
7114581	44" General Purpose Bucket ♦	$592.00	24%	$0.00	$449.92
	(Also Compatible with: L23, L28)				
7114583	50" General Purpose Bucket ♦	$618.00	24%	$0.00	$469.68
	(Also Compatible with: L23, L28)				
(FOR COMPATIBILITY - SEE THE LOADER BUCKET MATRIX AT THE BOTTOM FOR COMPATABILITY)					
Standard Duty Buckets					
7272770	56" STANDARD DUTY BUCKET Δ	$682.00	24%	$0.00	$518.32
7272769	62" STANDARD DUTY BUCKET Δ	$718.00	24%	$0.00	$545.68
7272771	68" STANDARD DUTY BUCKET Δ	$735.00	24%	$0.00	$558.60
7272768	74" STANDARD DUTY BUCKET Δ	$782.00	24%	$0.00	$594.32
Heavy Duty Buckets					
7293982	56" HEAVY DUTY BUCKET D	$875.00	24%	$0.00	$665.00
7272678	62" HEAVY DUTY BUCKET D	$938.00	24%	$0.00	$712.88
7272679	68" HEAVY DUTY BUCKET D	$1.035.00	24%	$0.00	$786.60
7272680	74" HEAVY DUTY BUCKET D	$1.125.00	24%	$0.00	$855.00
7272681	80" HEAVY DUTY BUCKET D	$1,225.00	24%	$0.00	$931.00
SEVERE DUTY BUCKETS					
7326130	74" SEVERE DUTY BUCKET D	$1,505.00	24%	$0.00	$1.143.80
7326129	80" SEVERE DUTY BUCKET D	$1,622.00	24%	$0.00	$1.232.72
7326128	86" SEVERE DUTY BUCKET D	$1,701.00	24%	$0.00	$1,292.76
7326127	92" SEVERE DUTY BUCKET D	$1.806.00	24%	$0.00	$1.372.56
LIGHT MATERIAL BUCKET					
7279100	68" LIGHT MATERIAL BUCKET Δ	$1,182.00	24%	$0.00	$898.32
7279101	74" LIGHT MATERIAL BUCKET Δ	$1,251.00	24%	$0.00	$950.76
7279102	80" LIGHT MATERIAL BUCKET Δ	$1.373.00	24%	$0.00	$1.043.48
7279103	86" LIGHT MATERIAL BUCKET Δ	$1.463.00	24%	$0.00	$1.111.88
7279104	92" LIGHT MATERIAL BUCKET Δ	$1,710.00	24%	$0.00	$1,299.60
7279105	98" LIGHT MATERIAL BUCKET Δ	$1,907.00	24%	$0.00	$1,449.32

Δ Buckets have holes predrilled to accept bolt-on cutting edges.
D Buckets have holes predrilled to accept bolt-on cutting edges or bolt-on teeth.

Part Number	Chipper Description	SLP in US$	Discount Percent	Labor	Price

(S450, S510, S550, S530, S570, S590, S595) (A770)
(S630, S650, S740, S750, S770, S850) (T450, T550, T590, T595)
(T630, T650, T740, T750, T770, T870)

6719129	**5A Chipper** (Loader must be equipped with a 7 pin Attachment Control Kit) (Attachment includes a 7-pin harness only) (Approved G-Series and newer Loaders only) **5A** Chipper must be installed **on 700-800 Series BICS Loaders. Will not function on non-BICS loaders, 953s or 963s.**	**$10,854.00**	**24%**	**$0.00**	**$8,249.04**

(S550H, S570H, S590H, S595H) (A770H)
(S630H, S650H, S740H, S750H, S770H, S850H) (T550H, T590H, T595H)
(T630H, T650H, T740H, T750H, T770H, T870H)

7117662	**8B Chipper** (Loader must be equipped with an 7-Pin Attachment Control Kit) (Approved G Series & New Loaders Only)	**$13,657.00**	**24%**	**$0.00**	**$10,379.32**

Part Number	Combination Bucket Description	SLP in US$	Discount Percent	Labor	Price

(S450, S510*, S550*, S530*, S570*) (T450)

7167310	**62" Combination Bucket** (Bob-on Teeth are available from Bobcat Dealer)	**$3,210.00**	**24%**	**$0.00**	**$2,439.60**

(S510, S550, S530, S570, S590, S595) (S630*, S650*, S740*, S750*, S770*)
(T550, T590)

7167311	**68" Combination Bucket** (Bob-on Teeth are available from Bobcat Dealer)	**$3,416.00**	**24%**	**$0.00**	**$2,596.16**

(S510, S550, S530, S570, S590, S595) (S630, S650, S740, S750, S770) (A770)
(T550, T590, T595) (T630, T650)

7167312	**74" Combination Bucket** (Bob-on Teeth are available from Bobcat Dealer)	**$3,601.00**	**24%**	**$0.00**	**$2,736.76**

(S630, S650, S740, S750, S770) (A770)
(T630, T650, T740, T750, T770)

7167313	**80" Combination Bucket** (Bob-on Teeth are available from Bobcat Dealer)	**$4,309.00**	**24%**	**$0.00**	**$3,274.84**

(S740, S750, S770) (A770) (T650, T740, T750, T770)

7167314	**84" Combination Bucket** (Bob-on Teeth are available from Bobcat Dealer)	**$4,821.00**	**24%**	**$0.00**	**$3,663.96**

***Requires Inset Rims**
Combination Buckets are not approved for use with the Tilt-Tatch.
Combination Buckets may interfere with tracks at extreme roll-back position on some loaders. Use of lift-arm stop is required if this occurs.
It is recommended that a port relief be installed for use with the Combination Buckets. Installation instructions are included in the Operation Manual.
Optional Open/Close Restricture is available to slow down the open/close functions of the combination bucket.

Part Number	Concrete Mixer Description	SLP in US$	Discount Percent	Labor	Price

(S450, S510, S550, S530, S570, S590, S595, S630, S650, S740, S750, S770, S850)
(A770) (T450, T550, T590, T595, T650, T740, T750, T770, T870)

7186695	**Concrete Mixer - M-Series Compatible** (Loader must be equipped with an Attachment Control Kit) (F-Series and prior Loaders require Remote Attachment Control Kit) (Attachment includes a 7-Pin Harness only)	**$4,277.00**	**24%**	**$0.00**	**$3,250.52**

Part Number	Concrete Pump Description	SLP in US$	Discount Percent	Labor	Price

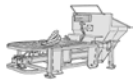

(S570, S570H, S590, S590H, S595, S595H)
(S630, S630H, S650, S650H, S740, S750, S750H, S770, S770H, S850, S850H)
(A770, A770H) (T550, T550H, T590, T590H, T595, T595H)
(T630, T630H, T650, T650H, T750, T750H, T770, T770H, T870, T870H)

7108693	**Concrete Pump** (Loader must be equipped with an Attachment Control Kit) (Attachment includes a 7-Pin Harness only) **(May also need Delivery System Kit-unless customer has this equipment)** **Concrete Pump needs to be installed on 700-800, S570-S590, A220-A300, T550-T590 G-Series or newer BICS Loaders or 963 G-Series, will not function on F-Series or non-BICS loaders, 953s or 963 C-Series.**	**$25,450.00**	**24%**	**$0.00**	**$19,342.00**

Part Number	Accessories Description	SLP in US$	Discount Percent	Labor	Price
6906079	**Delivery System Kit** (Includes 5' elbow, 5" to 3" reducer, (3) 25 ft. sections of 3" flexible hose, 3' x 6' flexible hose, (3) 3" x 10' steel lines, (2) 5" couplings, (8) 3" couplings, 3" cleanout ball) (Ship Weight 640 lbs.)	$5,291.00	24%	$0.00	$4,021.16
6906813	**Remote Control Kit** (The hand held transmitter runs all functions of the Concrete Pump within a range of 200-400 feet from the pump.) (Price includes $90 for installation)	$2,118.00	24%	$90.00	$1,699.68

Part Number	Digger Description	SLP in US$	Discount Percent	Labor	Price

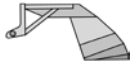

(MT50, MT52, MT55, MT85) (S70) (L23, L28)

7100915	**12S" Digger**	$834.00	24%	$0.00	$633.84

(S450, S510, S550, S530, S570, S590, S595)
(S630, S650, S740, S750, S770) (A770) (T450, T550, T590, T595)

6719756	**25" Digger**	$1,078.00	24%	$0.00	$819.28
6719757	**30" Digger**	$1,136.00	24%	$0.00	$863.36
6719758	**36" Digger**	$1,182.00	24%	$0.00	$898.32

Part Number	Dozer Blade Description	SLP in US$	Discount Percent	Labor	Price

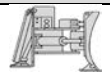

(S70)

7196165	**54" Utility Blade (with hydraulic angle)** (To be used as either a Snow Blade or a Dozer Blade)	$1,753.00	24%	$0.00	$1,332.28

(S450, S510, S550, S530, S570, S590, S595) (S630, S650, S750, S770)
(T450, T550, T590, T595) (T630, T650)

6905884	**80" Dozer Blade, 6-Way** (Loader must be equipped with an Attachment Control Kit) (When used on loaders equipped with a 14-Pin Attachment Control Kit, a 14-Pin Attachment T-Harness Kit is required)	$5,229.00	24%	$0.00	$3,974.04

(S630, S650, S750, S770) (A770) (T630, T650)

6905811	**90" Dozer Blade, 6-Way** (Loader must be equipped with an Attachment Control Kit) (When used on loaders equipped with a 14-Pin Attachment Control Kit, a 14-Pin Attachment T-Harness Kit is required)	$5,528.00	24%	$0.00	$4,201.28

(S630, S650, S750, S770, S850) (A770)
(T630, T650, T740, T750, T770, T870)

7105781	**96" Dozer Blade, 6-Way** (Loader must be equipped with an Attachment Control Kit) (When used on loaders equipped with a 14-Pin Attachment Control Kit, a 14-Pin	$6,966.00	24%	$0.00	$5,294.16

Part Number	Drop Hammer Description	SLP in US$	Discount Percent	Labor	Price

(S530, S570, S590, S595, (S630, S650, S740, S750, S770, S850) (A770)
(T550, T590, T630, T650, T750, T770, T870)

7137810	Drop Hammer	$8,935.00	24%	$0.00	$6,790.60

Part Number	Dumping Hopper Description	SLP in US$	Discount Percent	Labor	Price

(S70) (L23, L28)

6727275	Model 10 Dumping Hopper (Includes 8.5 x 12 Bobcat Heavy Duty Tire. Tire is not installed on Dumping Hopper.)	$3,148.00	24%	$0.00	$2,392.48

(S510, S550, S530, S570, S590, S595, S630, S650, S740, S750, S770, S850)
(A770) (T450, T550, T590, T595, T630, T650, T740, T750, T770, T870)

6717597	Model 25 Dumping Hopper (Includes 8.5 x 12 Bobcat Heavy Duty Tires. Tires are not installed on Dumping Hopper.)	$4,869.00	24%	$0.00	$3,700.44

Part Number	Flail Cutter Description	SLP in US$	Discount Percent	Labor	Price

(S530, S530H, S570, S570H, S590, S590H, S595, S595H)
(S630, S630H, S650, S650H, S740, S740H, S750, S750H, S770, S770H, S850, S850H) (A770, A770H) (T550, T550H, T590, T590H, T595, T595H)
(T630, T630H, T650, T650H, T740, T740H, T750, T750H, T770, T770H, T870, T870H)

7101894	FC200 Flail Cutter	$12,686.00	24%	$0.00	$9,641.36

Part Number	Forestry Cutter Description	SLP in US$	Discount Percent	Labor	Price

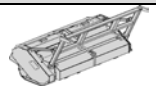

(S750H, S770H, SB50H) (A300H) (A770H)
(T750H, T770H, TB70H)

7194306	**Forestry Cutter, 50"** • **Must also order Forestry Applications Kit, for K-Series Loaders, p/n 7133810** • **For M-Series Loaders (S750H, S770H, SB50H, A770H, T750H, T770H, TB70H) must order Forestry Apps Kit, PN 7174126** • **Loader must be equipped with high flow and certain K-Series SN'd Loaders must be equipped with a upgraded cooling system**	**$24,809.00**	**24%**	**$0.00**	**$18,854.84**

(The following K-Series loader serial numbers must be equipped with the cooling system upgrade kit p/n 7126319: A300, SN 520011675 & below;
T300 s/n 532015966 & below; T250 s/n 531812826 & below; S300 s/n 531115051 & below) (All S330 Loader are equipped with upgrade cooling system)
For Certain SN'd A300, S300, S330, T250, T300, T320 Loaders must also order Door Wiring Harness - Will need to provide Serial No of machine

(S750H, S770H, SB50H) (A300H) (A770H)
(T750H, T770H, TB70H)

7194305	**Forestry Cutter, 60"** • **For K-Series Loaders (S300H, S330H, A300H, T250H, T300H, T320H)** • **Must also order Forestry Applications Kit, K-Series p/n 7133810** • **For M-Series Loaders (S750H, S770H, SB50H, A770H, T750H, T770H, TB70H)** **must also order Forestry Applications Kit, M-Series p/n 7174126** • **Loader must be equipped with high flow and upgraded cooling system**	**$26,139.00**	**24%**	**$0.00**	**$19,865.64**

(The following K-Series loader serial numbers must be equipped with the cooling system upgrade kit p/n 7126319: A300, SN 520011675 & below;
T300 s/n 532015966 & below; T250 s/n 531812826 & below; S300 s/n 531115051 & below) (All S330 Loader are equipped with upgrade cooling system)
For Certain SN'd A300, S300, S330, T250, T300, T320 Loaders must also order Door Wiring Harness - Will need to provide Serial No of machine

(S750H, S770H, SB50H) (A300H) (A770H)
(T750H, T770H, TB70H)

7204123	**Forestry Cutter, 50" 2 Speed** • **For K-Series Loaders (S300H, S330H, A300H, T250H, T300H, T320H)** • **Must also order Forestry Applications Kit, K-Series p/n 7133810** • **For M-Series Loaders (S750H, S770H, SB50H, A770H, T750H, T770H, TB70H)** **must also order Forestry Applications Kit, M-Series p/n 7174126** • **Loader must be equipped with high flow and upgraded cooling system**	**$27,324.00**	**24%**	**$0.00**	**$20,766.24**

(The following K-Series loader serial numbers must be equipped with the cooling system upgrade kit p/n 7126319: A300, SN 520011675 & below;
T300 s/n 532015966 & below; T250 s/n 531812826 & below; S300 s/n 531115051 & below) (All S330 Loader are equipped with upgrade cooling system)
For Certain SN'd A300, S300, S330, T250, T300, T320 Loaders must also order Door Wiring Harness - Will need to provide Serial No of machine

(S750H, S770H, SB50H) (A300H) (A770H)
(T750H, T770H, TB70H)

7204127	**Forestry Cutter, 60" 2-Speed** • **For K-Series Loaders (S300H, S330H, A300H, T250H, T300H, T320H)** • **Must also order Forestry Applications Kit, K-Series p/n 7133810** • **For M-Series Loaders (S750H, S770H, SB50H, A770H, T750H, T770H, TB70H)** **must also order Forestry Applications Kit, M-Series p/n 7174126** • **Loader must be equipped with high flow and upgraded cooling system**	**$28,824.00**	**24%**	**$0.00**	**$21,906.24**
7305459	**Forestry Cutter, 70"** • **For K-Series Loaders (S300H, S330H, A300H, T250H, T300H, T320H)** • **Must also order Forestry Applications Kit, K-Series p/n 7133810** • **For M-Series Loaders (S750H, S770H, SB50H, A770H, T750H, T770H, TB70H)** **must also order Forestry Applications Kit, M-Series p/n 7174126** • **Loader must be equipped with high flow and upgraded cooling system**	**$31,845.00**	**24%**	**$0.00**	**$24,202.20**

(The following K-Series loader serial numbers must be equipped with the cooling system upgrade kit p/n 7126319: A300, SN 520011675 & below;
T300 s/n 532015966 & below; T250 s/n 531812826 & below; S300 s/n 531115051 & below) (All S330 Loader are equipped with upgrade cooling system)
For Certain SN'd A300, S300, S330, T250, T300, T320 Loaders must also order Door Wiring Harness - Will need to provide Serial No of machine

Part Number	Factory Installed Ootions Description	SLP in US$	Discount Percent	Labor	Price
7195450	**Front Gate, 50"** (Produces finer mulch)	**$1,806.00**	**24%**	**$0.00**	**$1,372.56**
7195323	**Front Gate, 60"** (Produces finer mulch)	**$1,833.00**	**24%**	**$0.00**	**$1,393.08**

Part Number	Factory Installed Options Description	SLP in US$	Discount Percent	Labor	Price
7230523	**Tier 3 & IT4 - Forestry Applications Kit, M-SERIES LOADERS ONLY**** **Kit is required to operate Forestry Cutter and provides operator & machine protection.** ****Must also order Engine Seal Kit** **Not compatible with rear auxiliary hydraulics.** Kit includes: Forestry Door (3/4 in. laminated polycarbonate), Front and Rear Light Guards, Hydraulic Quick Coupler Guard, Fire Extinguisher, Level II FOPS, Muffler Guard, Lift Cylinder Debris Shields, Top and Rear Windows, Polycarbonate Side Windows (Add $990.00 for installation to discounted price)	$8,253.00	24%	$990.00	$7,262.28
7257723	**Tier 4 - Forestry Applications Kit, M-SERIES LOADERS ONLY**** **Kit is required to operate Forestry Cutter and provides operator & machine protection.** ****Must also order Engine Seal Kit** **Not compatible with rear auxiliary hydraulics.** Kit includes: Forestry Door (3/4 in. laminated polycarbonate), Front and Rear Light Guards, Hydraulic Quick Coupler Guard, Fire Extinguisher, Level II FOPS, Muffler Guard, Lift Cylinder Debris Shields, Top and Rear Windows, Polycarbonate Side Windows (Add $990.00 for installation to discounted price)	$8,253.00	24%	$990.00	$7,262.28

NOTE: K-Series Loaders must be equipped with PN 7131810 - Forestry Applications Kit - please call for pricing

Part Number	Forks, Utility Description	SLP in US$	Discount Percent	Labor	Price
	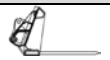				
(S70) (L23, L28)					
6727904	**36" Utility fork, with 5 Teeth** (Use with Farm/Utility grapple P/N 6728117) (Additional Forks (p/n 6717622) may be Ordered)	**$861.00**	**24%**	**$0.00**	**$654.36**
(S70, S450) (T450) (L23, L28)					
6727888	**54" Utility fork, with 7 Teeth** (Use with Farm/Utility grapple P/N 6728117) (Additional Forks (p/n 6717622) may be ordered)	**$1,004.00**	**24%**	**$0.00**	**$763.04**
(S450, S510, S550, S530, S570, S590, S595, S630, S650) (T450, T550, T590, T595)					
6725178	**60" Utility fork, with 8 Teeth** (Use with Farm/Utility grapple P/N 7176977) (Additional Forks (p/n 6717622) may be ordered)	**$1,114.00**	**24%**	**$0.00**	**$846.64**
(S450, S510, S550, S530, S570, S590, S595, S630, S650) (T450, T550, T590, T595)					
6725179	**66" Utility fork, with 9 Teeth** (Use with Farm/Utility grapple P/N 7176977) (Additional Forks (p/n 6717622) may be ordered)	**$1,304.00**	**24%**	**$0.00**	**$991.04**
(S510, S550, S530, S570, S590, S595, S630, S650, S740, S750, S770) **(A770) (T450, T550, T590, T595) (T630, T650)**					
6725180	**72" Utility fork, with 10 Teeth** (Use with Farm/Utility grapple P/N 7176977) (Additional Forks (p/n 6717622) may be ordered)	**$1,373.00**	**24%**	**$0.00**	**$1,043.48**
(S530, S570, S590, S595, S630, S650, S740, S750, S770) **(A770) (T550, T590, T595) (T630, T650)**					
7107243	**80" Utility fork, with 11 Teeth** (Use with Farm/Utility grapple P/N 7176977) (Additional Forks (p/n 6717622) may be ordered)	**$1,600.00**	**24%**	**$0.00**	**$1,216.00**

Part Number	Grader Description	SLP in US$	Discount Percent	Labor	Price

(S450, S510, S550, S530, S570, S590, S595, S630, S650, S740, S750, S770)
(A770) (T450, T550, T590, T595)

6906480	**Grader, 84"** (Loader must be equipped with an Attachment Control Kit) (When used on loaders equipped with a 14-Pin Attachment Control Kit, a 14-Pin Attachment T-Harness Kit P/N 7164095 is required)	**$9,623.00**	**24%**	**$0.00**	**$7,313.48**

(S740, S750, S770, S850) (A770) (T650, T740, T750, T770, T870)

7160005	**Grader,96"** (Loader must be equipped with an Attachment Control Kit) (When used on loaders equipped with a 14-Pin Attachment Control Kit, a 14-Pin Attachment T-Harness Kit P/N 7164095 is required)	**$15,219.00**	**24%**	**$0.00**	**$11,566.44**

(S740, S750, S770, S850) (A770) (T740, T750, T770, T870)

7182060	**Grader, 108"** (Loader must be equipped with an Attachment Control Kit) (When used on loaders equipped with a 14-Pin Attachment Control Kit, a 14-Pin Attachment T-Harness Kit P/N 7164095 is required)	**$16,114.00**	**24%**	**$0.00**	**$12,246.64**
7177684	**END-WING KIT** (Converts graders 96" and 108" into box blade for finish grading only) (Not compatible with the Sonic Tracer)	**$461.00**	**24%**	**$0.00**	**$350.36**

Part Number	Accessories Description	SLP in US$	Discount Percent	Labor	Price
7160486	**Laser Receiver, BLR2** **(Must order 2 for use with laser kit)** (May also need a laser transmitter and tripod—unless customer has this equipment.) (The laser receivers will work with most rotating laser transmitters, for full functionality a dual slope-rotating transmitter is recommended.)(Approved for use on Graders S/N 648001631 & above, started production April 2009, and 96" and 108" Graders)	**$2,099.00**	**24%**	**$0.00**	**$1,595.24**
7275232	**Laser Transmitter, Dual Slope** **(Trimble GL422N**; includes CR600 receiver)	**$2,679.00**	**24%**	**$0.00**	**$2,036.04**
6688806	**Tripod**	**$268.00**	**24%**	**$0.00**	**$203.68**
7211624	**Sonic Tracer and Slope Sensor Mounting Kit** (For 96" and 108" Grader) (Must also order Sonic Tracer and Slope Sensor Pkg, P/N 7023454) Incs Mounting Brackets, hardware and wiring harnesses (not compatible with end wing kit)	**$1,834.00**	**24%**	**$270.00**	**$1,663.84**
7023454	**Sonic Tracer and Slope Sensor Package** **(Approved for 96" and 108" Graders)** (Must also order Sonic Tracer and Slope Mounting Kit, P/N 7211624) Inclk ST400 Sonic Tracer, AS400 Slopse Sensor (qty 2) and RS400 Rotation Sensor) (Use where laser transmitters won't work because of obstructions or where grader must follow predetermined slopes and land contours)	**$9,785.00**	**24%**	**$0.00**	**$7,436.60**
7306968	**3D MOUNTING KIT** (Required for 3D sensor Kit 7276540 for use with 3D Ready System)	**$1,261.00**	**24%**	**$0.00**	**$958.36**
7276541	**3D Harness Kit** (Approved for 96" and 108" Graders) Incs Wiring Harness, Attach Harness, Radio Brkt & Mast Mounts	**$4,863.00**	**24%**	**$0.00**	**$3,695.88**
7276540	**3D Sensor Kit** (Approved for 96" and 108" Graders) Incs AS400 Slope Sensors (Qty2) and RS400 Rotation Sensor)	**$5,557.00**	**24%**	**$0.00**	**$4,223.32**
7164094	**Laser Mounting Kit, BLR2 (must also order 2 receivers)** (For 84" Grader) (Must also order two laser receivers, p/n 7160486) (Approved for use on Graders S/N 648001631 & above, started production April 2009) (Includes two receiver poles and wiring harnesses) (Price includes $225 for installation)	**$947.00**	**24%**	**$225.00**	**$944.72**
7177685	**Laser Mounting Kit** (For 96" and 108" Grader) (Must also order two laser receivers, p/n 7160486) (Includes two receiver poles and wiring harnesses) (Price includes $225 for installation)	**$1,012.00**	**24%**	**$225.00**	**$994.12**

Part Number	Grapple, Farm/Utility Description	SLP in US$	Discount Percent	Labor	Price
	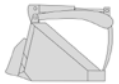 *Farm Grapple with Bucket* 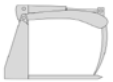 *Farm Grapple with Forks*				
(MT50, MT52, MT55,MT85) (S70) (L23, L28)					
6728117	**Grapple, 32" Utility** (Fits Current 36", 48" & 54" Utility Forks) (Price includes $270 for installation)	**$1,241.00**	**24%**	**$270.00**	**$1,213.16**
7125370	**Grapple, 32"** (Fits Current 36" - 50" **General Purpose** buckets) (If bucket is equipped with a 6 hole step, must order a replacement 4 hole step, P/N 7103163) (Price includes $270 for installation)	**$1,229.00**	**24%**	**$270.00**	**$1,204.04**
(S450, S510, S550, S530, S570, S590,S595, S630, S650, S740, S750, S770) (A770) (T450, T550, T590, T595) (T630, T650)					
7176977	**Grapple, 55" Utility – C/I** (Fits 62", 68", 74" and 80" **Roundback** Low Profile and Construction/Industrial Buckets and 60", 66", 72", and 80" Utility Forks) (Will not fit Heavy Duty Construction/Industrial Buckets) (Price includes $270 for installation)	**$1,635.00**	**24%**	**$270.00**	**$1,512.60**
(S510, S550, S530, S570)					
7176783	**Grapple, 55" Utility - GP** (Fits 62", 68" and 74" **General Purpose** buckets) (Price includes $270 for installation)	**$1,615.00**	**24%**	**$270.00**	**$1,497.40**

Part Number	Grapple, Industrial Description	SLP in US$	Discount Percent	Labor	Price
	Industrial Bucket Grapple *Industrial Fork Grapple*				
(MT52, MT55, MT85) (S70) (L23)					
7135737	**36" Industrial Bucket Grapple** (Bolt-On Cutting Edge included)	**$1,938.00**	**24%**	**$0.00**	**$1,472.88**
(S450, S510, S550, S530, S570, S590, S595) (T450, T550, T590, T595)					
7168342	**62" Industrial Bucket Grapple** (Bolt-On Cutting Edge included)	**$3,463.00**	**24%**	**$0.00**	**$2,631.88**
(S450, S510, S550, S530, S570, S590, S595, S630, S650, S740, S750, S770) (T450, T550, T590, T595) (T630, T650)					
7168340	**68" Industrial Bucket Grapple** (Bolt-On Cutting Edge included)	**$3,601.00**	**24%**	**$0.00**	**$2,736.76**
(S450, S510, S550, S530, S570, S590, S595, S630, S650, S740, S750, S770) (T450, T550, T590, T595) (T630, T650)					
7168344	**66" Industrial Fork Grapple, with 7 teeth**	**$4,162.00**	**24%**	**$0.00**	**$3,163.12**
(S630, S650, S740, S750, S770) (A770) (T550, T590, T595) (T630, T650)					
7168290	**74" Industrial Bucket Grapple** (Bolt-On Cutting Edge included)	**$3,881.00**	**24%**	**$0.00**	**$2,949.56**
(S630, S650, S740, S750, S770, S850) (A770) (T630, T650, T740, T750, T770, T870)					
7166624	**78" Industrial Fork Grapple, with 8 teeth**	**$4,996.00**	**24%**	**$0.00**	**$3,796.96**
(S630, S650, S740, S750, S770, S850) (A770) (T630, T650, T740, T750, T770, T870)					
7168339	**80" Industrial Bucket Grapple**	**$4,299.00**	**24%**	**$0.00**	**$3,267.24**

It is recommended that a port relief be installed for use with grapples. Installation instructions are included in the Operation Manual.
Optional Open/Close Restrictor is available to slow down the open/close functions of the combination bucket.

Part Number	Grapple, Root Description	SLP in US$	Discount Percent	Labor	Price

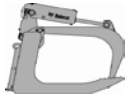

(S70) (L23)

7134179	36" Root Grapple	$1,994.00	24%	$0.00	$1,515.44
(S510, S550, S530, S570, S590) (T450, T550, T590, T595)					
7168343	66" Root Grapple	$3,338.00	24%	$0.00	$2,536.88
(S530, S570, S590, S595, S630, S650, S740, S750, S770) (A770) (T550, T590, T595, T630, T650, T740, T750, T770)					
7165486	72" Root Grapple	$3,621.00	24%	$0.00	$2,751.96
(S530, S570, S590, S595, S630, S650, S740, S750, S770, S850) (A770) (T550, T590, T595) (T630, T650, T740, T750, T770, T870)					
7168338	82" Root Grapple	$4,009.00	24%	$0.00	$3,046.84

It is recommended that a port relief be installed for use with grapples. Installation instructions are included in the Operation Manual.
Optional Open/Close Restricture is available to slow down the open/close functions of the combination bucket.

Part Number	Landplane Description	SLP in US$	Discount Percent	Labor	Price

(S70) (L23, L28)

6907173	48" Deluxe Landplane Leveling Attachment (Includes expanded metal guse, scarifier assembly, teeth and respective hardware)	$1,267.00	24%	$0.00	$962.92
(S450, S510, S550, S530, S570, S590, S595) (S630, S650, S750, S770) (A770) (T450, T550, T590, T595) (T630, T650)					
6906150	72" Deluxe Landplane Leveling Attachment (Includes expanded metal guse, scarifier assembly, teeth and respective hardware)	$2,223.00	24%	$0.00	$1,689.48
(S450, S510, S550, S530, S570, S590, S220, S250, S300, S330) (S630, S650, S750, S770) (A770) (T450, T550, T590, T595, T250, T300, T320) (T630, T650, T740, T750, T770)					
6906115	78" Deluxe Landplane Leveling Attachment (Includes expanded metal guse, scarifier assembly, teeth and respective hardware)	$2,434.00	24%	$0.00	$1,849.84

Part Number	Landscape Rake Description	SLP in US$	Discount Percent	Labor	Price

(S450, S510, S550, S530, S570, S590 S595) (S630, S650) (T450, T550, T590) (T630, T650)					
6709107	5ft Landscape Rake	$7,757.00	24%	$0.00	$5,895.32
(S510, S550, S530, S570, S590, S595, S630, S650, S740, S750, S770) (A770) (T550, T590, T595) (T630, T650, T740, T750, T770)					
6710630	6ft Landscape Rake	$8,131.00	24%	$0.00	$6,179.56

Part Number	Mower, Finish Description	SLP in US$	Discount Percent	Labor	Price

(S450, S510, S550, S530, S570, S590, S595) (S630, S650, S740, S750, S770) (A770) (T450, T550, T590, T595) (T630, T650, T740, T750, T770)					
7144850	72" Mower	$5,680.00	24%	$0.00	$4,316.80
(S510, S550, S530, S570, S590, S595, S630, S650, S740, S750, S770, S850) (A770) (T550, T590, T595) (T630, T650, T740, T750, T770, T870)					
7143993	90" Mower	$6,215.00	24%	$0.00	$4,723.40

Part Number	Packer Wheel Description	SLP in US$	Discount Percent	Labor	Price

(S450, S510, S530, S550, S570, S590, S595 S630, S650, S740, S750, S770, S850) (A770) (T450, T550, T590, T595)
(T630, T650, T750, T770, T870)

6806644	Packer Wheel (Must also order loader x-change mounting frame p/n 7141800)	$2,208.00	24%	$0.00	$1,678.08

Part Number	Accessories Description	SLP in US$	Discount Percent	Labor	Price
7141800	Loader X-Change Mounting Frame	$1,015.00	24%	$0.00	$771.40

Part Number	Pallet Forks, Standard and Bale Description	SLP in US$	Discount Percent	Labor	Price

Standard Pallet Fork Teeth and Frame

Bale Forks and Frame

(S70) (L23, L28)

6809716	Pallet Fork Frame, less teeth	$402.00	24%	$0.00	$305.52
6540184	36" Pallet Fork Teeth, Set of 2	$274.00	24%	$0.00	$208.24

Pallet Frames

(S450, S510, S530, S550, S570, S590, S595, S630, S650,
S740, S750, S770, S850) (A770) (T450, T550, T590, T595, T630, T650, T740, T750, T770, T870)

7297409	2.5K STANDARD DUTY PALLET FORK FRAME, LESS TEETH	$335.00	24%	$0.00	$254.60
7294305	4K HEAVY DUTY PALLET FORK FRAME, LESS TEETH	$407.00	24%	$0.00	$309.32
7294332	5.5K SEVERE DUTY PALLET FORK FRAME, LESS TEETH	$649.00	24%	$0.00	$493.24

Pallet Teeth

7308798	42", 2.5K STANDARD DUTY PALLET FORK TEETH, SET OF 2	$259.00	24%	$0.00	$196.84
6540183	42", 4K HEAVY DUTY PALLET FORK TEETH, SET OF 2	$292.00	24%	$0.00	$221.92
6540182	48", 4K HEAVY DUTY PALLET FORK TEETH, SET OF 2	$299.00	24%	$0.00	$227.24
6541521	42", 5.5K SEVERE DUTY PALLET FORK TEETH, SET OF 2	$396.00	24%	$0.00	$300.96
6541518	48", 5.5K SEVERE DUTY PALLET FORK TEETH, SET OF 2	$447.00	24%	$0.00	$339.72

(STANDARD DUTY, HEAVY DUTY, SEVERE DUTY)

7306978	BRICK-GUARD CENTER *(Quantity orders only on P/N 7306978 in multiples of 5 only) (Compatible with Standard, Heavy and Severe Duty Frames)*	$102.00	24%	$0.00	$77.52

(SEVERE DUTY)

7306981	BRICK-GUARD EXTENSION *(Quantity orders only on P/N 7306978 in multiples of 5 only) (Compatible with Severe Duty Frames Only)*	$203.00	24%	$0.00	$154.28

Bale Forks

6815781	Bale Forks, Set of 2	$682.00	24%	$0.00	$518.32

Part Number	Pallet Forks, Hydraulic Description	SLP in US$	Discount Percent	Labor	Price

(S450, S510, S550, S530, S570, S590, S595) (A770)
(S630, S650, S740, S750, S770, S850)
(T450, T550, T590, T595) (T630, T650, T740, T750, T770, T870)

6905425	48" Hydraulic Pallet Fork (Includes back frame and 2 hydraulically adjustable 48" teeth)	$3,014.00	24%	$0.00	$2,290.64

Part Number	Planer Description	SLP in US$	Discount Percent	Labor	Price

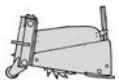

(S450, S510, S550, S530, S570, S590, S595, S630, S650, S740, S750, S770)
(A770) (T450, T550, T590, T595) (T630, T650, T740, T750, T770)

M7019	14" Planer, Standard Flow (Includes manual depth adjust, hydraulic sideshift, and hoses) Must also order a drum. (No Attachment Control Kit is required)	$9,255.00	24%	$0.00	$7,033.80

Drums for 14" Planers - MUST order one of the following drum options

M7019-R01-C03	14" All Purpose Drum (With 46 bits) (Ship Weight 260 lbs.)	$2,593.00	24%	$0.00	$1,970.68

(S550H, S570H, S590H, S595H)
(S630H, S650H, S740H, S750H, S770H, S850H) (A770H)
(T550H, T590H, T595H) (T630H, T650H, T740H, T750H, T770H, T870H)

M7018	18" Planer, High Flow (Includes hydraulic depth adjust, hydraulic sideshift, and hoses) (Must also order drum) (Loader must be equipped with an Attachment Control Kit) (When used on loaders equipped with a 14-Pin Attachment Control Kit , a 14-Pin Attachment T-Harness Kit P/N 7166895 is required)	$13,891.00	24%	$0.00	$10,557.16

Drums for 18" Planers - MUST order one of the following drum options

M7018-R01-C10	18" Fast Cut All Purpose Drum (With 47 bits) (Ship Weight 285 lbs.)	$3,295.00	24%	$0.00	$2,504.20
M7018-R01-C11	18" Smooth Cut All Purpose Drum (With 84 bits) (Ship Weight 340 lbs.)	$4,208.00	24%	$0.00	$3,198.08

(S570H, S590H, S595H, S630H, S650H, S740H, S750H, S770H, S850H)
(A770H) (T550H, T590H, T595H, T630H, T650H, T740H, T750H, T770H, T870H)

M7017	24" Planer, High Flow (Includes hydraulic depth adjust, hydraulic sideshift, and hoses) (Must also order drum) (Loader must be equipped with an Attachment Control Kit) (When used on loaders equipped with a 14-Pin Attachment Control Kit , a 14-Pin Attachment T-Harness Kit P/N 7166895 is required)	$16,823.00	24%	$0.00	$12,785.48

Drums for 24" Planers - MUST order one of the following drum options

M7017-R01-C04	24" Fast Cut All Purpose Drum (With 57 bits) (Ship Weight 375 lbs.)	$4,467.00	24%	$0.00	$3,394.92
M7017-R01-C12	24" Smooth Cut All Purpose Drum (With 124 bits) (Ship Weight 420 lbs.)	$5,608.00	24%	$0.00	$4,262.08

(S630H, S650H, S740H, S750H, S770H, S850H) (A770H)
(T630H, T650H, T740H, T750H, T770H, T870H)

6726632	40" Planer, High Flow (Includes hydraulic depth adjust, 40" drum, hydraulic sideshift, hydraulic oscillation & hoses) (Loader must be equipped with an Attachment Control Kit) (When used on loaders equipped with a 14-Pin Attachment Control Kit, a 14-Pin Attachment T-Harness Kit is required)	$28,021.00	24%	$0.00	$21,295.96

*Other Drum Options available as dealer installed drums - Call for Pricing

Part Number	Rock Bucket Description	SLP in US$	Discount Percent	Labor	Price

(S450, S510, S550, S530, S570, S590, S595, S630, S650 (A300)
(T450 T550, T590, T595)
(T630. T650)

7185941	62" Rock Bucket	$1,490.00	24%	$0.00	$1,132.40

(S450, S510, S550, S530, S570, S590, S595, S630, S650. S740, S750, S770)
T450, T550, T590, T595,
T630. T650)

7185943	68" Rock Bucket	$1,558.00	24%	$0.00	$1,184.08

(S630, S650, S740, S750, S770, S850) (A770)

(T630, T650, T740, T750, T770. T870)

7185945	74" Rock Bucket	$1,627.00	24%	$0.00	$1,236.52

(S630, S650, S740, S750, S770, S850) (A770)
(T630, T650, G740, T750, T770. T870)

7185947	82" Rock Bucket	$1,801.00	24%	$0.00	$1,368.76

Bobcat Rock Buckets work excellent for separating unwanted objects, such as rocks and other debris, from work areas while leaving finer material behind that can be cultivated or landscaped. Each time tip is fully gusseted on each side, and connected to the tip next to it. This allows the Bobcat Rock Bucket to be used effectively as a tool to clear the soil surface of vegetation or other debris, as well as to be used to pull up objects from below the ground surface.

Part Number	Scarifier Description	SLP in US$	Discount Percent	Labor	Price

(S450, S510, S550, S530, S570, S590, S595, S630, S650, S740, S750, S770)
(A770) (T450, T140, T550, T590, T595) (T630, T650)

6563526	Front Scarifier (Includes 2 Depth Guides and 5 Teeth)	$1,241.00	24%	$0.00	$943.16

Part Number	Scraper Description	SLP in US$	Discount Percent	Labor	Price

(S450, S510, S550, S530, S570, S590, S5950)
(S630, S650, S740, S750, S770) (A770) (T450, T550, T590, T595)
(T630, T650, T740, T750, T770)

6675211	Scraper	$1,194.00	24%	$0.00	$907.44

Part Number	Seeder Description	SLP in US$	Discount Percent	Labor	Price

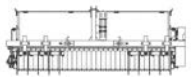

(S450, S510, S550, S530, S570, S590, S595, S630, S650, S740, S750, S770)
(A770) (T450, T550, T590, T595) (T630, T650, T740, T750, T770)

7167712	Seeder, 72", 3PT Mounting (Must also order Bob-Tach adapter)	$7,096.00	24%	$0.00	$5,392.96

Part Number	Factory Installed Ontions Description	SLP in US$	Discount Percent	Labor	Price
7167758	Bob-Tach Adapter (Allows Seeder to mount on Bob-Tach equipped machines)	$661.00	24%	$0.00	$502.36

Part Number	Silt Fence Installer Description	SLP in US$	Discount Percent	Labor	Price

(S630, S650, S740, S750, S770, S850) (A770)
(T550, T590, T595, T630, T650, T740, T750, T770, T870)

7137320	Silt Fence Installer (Must also order mounting frame)	$5,006.00	24%	$0.00	$3,804.56

Part Number	Factory Installed Options Description	SLP in US$	Discount Percent	Labor	Price
7137333	Loader Rigid Mounting Frame	$1,225.00	24%	$0.00	$931.00
7139171	3-Point Rigid Mounting Frame (Must also order Adapter p/n 7137334)	$1,205.00	24%	$0.00	$915.80
7137332	3-Point Mounting Frame, 72" Side-Shift (Must also order Adapter p/n 7137334)	$2,397.00	24%	$0.00	$1,821.72
7137331	3-Point Mounting Frame, 84" Side-Shift (Must also order Adapter p/n 7137334)	$2,529.00	24%	$0.00	$1,922.04

Part Number	Snow Blade Description	SLP in US$	Discount Percent	Labor	Price

(MT50, MT52, MT55, MT85) (S70)

7196165	54" Utility Blade (with hydraulic angle) (To be used as either a Snow Blade or a Dozer Blade)	$1,753.00	24%	$0.00	$1,332.28

(S450, S510, S550, S530, S570, S590, S595) (T450) (L28)

6906107	60" Snow Blade (with hydraulic angle)	$2,260.00	24%	$0.00	$1,717.60

(S450, S510, S550, S530, S570, S590, S595, S630, S650) (T450)

6905156	72" Snow Blade (with hydraulic angle)	$2,365.00	24%	$0.00	$1,797.40

(S450, S510, S550, S530, S570, S590, S595) (S630, S650, S740, S750, S770)
(T450) (A770)

6716836	84" Snow Blade (with hydraulic angle)	$2,524.00	24%	$0.00	$1,918.24

(S630, S650, S740, S750, S770) (A770) (T450)

6716838	96" Snow Blade (with hydraulic angle)	$2,735.00	24%	$0.00	$2,078.60

(S510, S550, S530, S570, S590, S595 (S630, S650) (T450, T550, T590) (T630, T650)

7207861	86" Snow Blade – Heavy Duty (with hydraulic angle)	$3,923.00	24%	$0.00	$2,981.48

(S510, S550, S530, S570, S590, S595, S630, S650, S740, S750, S770)
(A770) (T450, T550, T590, T595) (T630, T650, T740, T750, T770)

7207862	96" Snow Blade – Heavy Duty (with hydraulic angle)	$4,156.00	24%	$0.00	$3,158.56

(S510, S550, S530, S570, S590, S595, S630, S650, S740, S750, S770, S850)
(A770) (T550, T590, T595, T630, T650, T740, T750, T770, T870)

7207863	108" Snow Blade – Heavy Duty (with hydraulic angle)	$4,447.00	24%	$0.00	$3,379.72

Part Number	Snow Pusher Description	SLP in US$	Discount Percent	Labor	Price

(S450,S510, S550, S530, S570, S590, S595, S630, S650, S740, S750, S770, S850) (A770) (T450, T550, T590, T595) (T630, T650, T740, T750, T770, T870)					
7113767	Snow Pusher, 8'	$3,269.00	24%	$0.00	$2,484.44
(S590, S595, S630, S650, S740, S750, S770, S850) (A770) (T550, T590, T595) (T630, T650, T740, T750, T770, T870)					
7116164	Snow Pusher, 10'	$3,596.00	24%	$0.00	$2,732.96

Part Number	Snow Pusher Pro Description	SLP in US$	Discount Percent	Labor	Price

(S150, S160, S175, S185, S205) (S510, S530, S550, S570, S590, S595, S630, S650, S740, S750, S770, S850) (A770) (T140, T180, T190) (T550, T590, T595, T630, T650, T740, T770, T870)					
7385513	96" SNOW PUSHER PRO	$7,645.00	24%	$0.00	$5,810.20
(S175, S185, S205) (S630, S650, S740, S750, S770, S850) (A770) (T140, T180, T190) (T630, T650, T740, T750, T770, T870)					
7385514	108" SNOW PUSHER PRO	$7,865.00	24%	$0.00	$5,977.40
(S630, S650, S740, S750, S770, S850) (A770) (T180, T190) (T630, T650, T740, T750, T770, T870)					
7385515	120" SNOW PUSHER PRO	$8,085.00	24%	$0.00	$6,144.60

Part Number	Snow V-Blade Description	SLP in US$	Discount Percent	Labor	Price

Blade in "V" Configuration

Blade in "Scoop" Configuration

Blade in "Angled" Configuration

(S450, S510, S550, S530, S570, S590, S595) (T450)					
7104861	60" Snow V-Blade, 7-Pin (Loader must be equipped with an Attachment Control Kit) Blade is equipped with fingertip 7-Pin Control. Adjustable blade width from 53-60 inches.	$4,172.00	24%	$0.00	$3,170.72
(S450, S510, S550, S530, S570, S590, S595) (T450, T550, T590, T595)					
6958576	72" Snow V-Blade (Loader must be equipped with an Attachment Control Kit) (When used on loaders equipped with a 14-Pin Attachment Control Kit a 14-Pin Attachment T-Harness Kit (P/N 6725383) is required)	$4,383.00	24%	$0.00	$3,331.08
(S450, S510, S550, S530, S570, S590, S595, S630, S650, S740, S750, S770) (A770) (T450, T550, T590, T595) (T630, T650, T740, T750, T770)					
6958577	84" Snow V-Blade (Loader must be equipped with an Attachment Control Kit) (When used on loaders equipped with a 14-Pin Attachment Control Kit a 14-Pin Attachment T-Harness Kit (P/N 6725383) is required)	$4,594.00	24%	$0.00	$3,491.44
(S530, S570, S590, S595) (S630, S650, S740, S750, S770) (A770) (T550, T590, T595) (T630, T650, T740, T750, T770)					
6958578	96" Snow V-Blade (Loader must be equipped with an Attachment Control Kit) (When used on loaders equipped with a 14-Pin Attachment Control Kit a 14-Pin Attachment T-Harness Kit (P/N 6725383) is required)	$4,805.00	24%	$0.00	$3,651.80
(S630, S650, S740, S750, S770) (A770) (T630, T650, T740, T750, T770)					
6958579	108" Snow V-Blade (Loader must be equipped with an Attachment Control Kit) (When used on loaders equipped with a 14-Pin Attachment Control Kit a 14-Pin Attachment T-Harness Kit (P/N 6725383) is required)	$5,016.00	24%	$0.00	$3,812.16

Part Number	Snowblower Description	SLP in US$	Discount Percent	Labor	Price

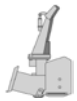

Part Number	SB150 Snowblower Description	SLP in US$	Discount Percent	Labor	Price
(MT52, MT55, MT85) (S70)					
M7007	SB150 x 36" (Loader must be equipped with a Bobcat 14-Pin Attachment Control Kit) (Snowblower includes hydraulic motor package)	$4,625.00	24%	$0.00	$3,515.00
(MT52, MT55, MT85) (S70, S100) (T110) (L23, L28)					
M7008	SB150 x 48" (Loader must be equipped with a Bobcat 14-Pin Attachment Control Kit) (Snowblower includes hydraulic motor package)	$4,780.00	24%	$0.00	$3,632.80

Part Number	SB200 Snowblower Description	SLP in US$	Discount Percent	Labor	Price
	Preferred Hydraulic Motor Package (BOLD)				
	Must order a hydraulic motor package with the SB200 & SB240 Snowblowers				
	Loader must be equipped with a 7-pin Attachment Control Kit				
(S450*, S510*, S550*, S550H*, S530*, S570*, S570H*, S595*, S595H*) (T450)					
M7001	**SB200 x 60" Snowblower**	**$4,692.00**	**24%**	**$0.00**	**$3,565.92**
M7001-R01-C01	5.5 Hydraulic Motor Package (S130, S150*, S160*, S175*, S185*, S205*, S450, S510*, S530*, S550*, S570*,S590*, S595*)(T180, T190, T450)	**$1,125.00**	**24%**	**$0.00**	**$855.00**
M7001-R01-C02	6.2 Hydraulic Motor Package (S450, S510*, S550*, S530*, S570*, S595*) (T450)	**$1,189.00**	**24%**	**$0.00**	**$903.64**
M7001-R01-C03 S650, S740, S7	8.0 Hydraulic Motor Package (S630, S650, S740, S750, S770, A770)	**$1,189.00**	**24%**	**$0.00**	**$903.64**
M7001-R01-C04	9.6 Hydraulic Motor Package (S550H*, S570H*, S595H*)	**$1,257.00**	**24%**	**$0.00**	**$955.32**
(S450, S510, S550, S550H, S530, S570, S570H, S590, S590H, S595, S595H) **(S630*, S630H*, S650*, S650H*, S740*, S750*, S770*) (T450, T550, T550H, T590, T590H, T595, T595H)**					
M7002	**SB200 x 60" Snowblower**	**$4,839.00**	**24%**	**$0.00**	**$3,677.64**
M7002-R01-C01	5.5 Hydraulic Motor Package (S450, S510, S550, S530, S570, S590, S595) (T450, T550, T590, T595)	**$1,125.00**	**24%**	**$0.00**	**$855.00**
M7002-R01-C02	6.2 Hydraulic Motor Package (S450, S510, S550, S530, S570, S590, S595) (T450, T550, T590, T595)	**$1,125.00**	**24%**	**$0.00**	**$855.00**
M7002-R01-C03	8.0 Hydraulic Motor Package (S630*, S650*, S740*, S750*, S770*) (S550H, S570H, S590H, S595) (T550H, T590H, T595H)	**$1,189.00**	**24%**	**$0.00**	**$903.64**
M7002-R01-C04	9.6 Hydraulic Motor Package (S550H, S570H, S590H, S595H, S630H*, S650H*) (T550H, T590H, T595H)	**$1,257.00**	**24%**	**$0.00**	**$955.32**
	***Offset rims required**				
	Must order a hydraulic motor package with the SB200 Snowblowers				
	Loader must be equipped with a 7-pin Attachment Control Kit				
(S450, S510, S550, S550H, S530, S570, S570H, S590, S590H, S595, S595H) **(S630, S630H, S650, S650H, S740, S750, S770) (A770) (T450, T550, T550H, T590, T590H, T595, T595H)** **(T630, T630H, T650, T650H, T740*, T750*, T770*)**					
M7003	**SB200 x 72" Snowblower**	**$4,998.00**	**24%**	**$0.00**	**$3,798.48**
M7003-R01-C01	5.5 Hydraulic Motor Package (S450, S510, S550, S530, S570, S590) (T450, T550, T590, T595)	**$1,125.00**	**24%**	**$0.00**	**$855.00**
M7003-R01-C02	6.2 Hydraulic Motor Package (S450, S510, S550, S530, S570, S590, S250, S300, S330) (T450, T550, T590, T595)	**$1,125.00**	**24%**	**$0.00**	**$855.00**
M7003-R01-C03	8.0 Hydraulic Motor Package (S630, S650, S740, S750, S770) (A770) (T630, T650, T740*, T750*, T770*) (S550H, S570H, S590H) (T550H, T590H, T595H)	**$1,189.00**	**24%**	**$0.00**	**$903.64**
M7003-R01-C04	9.6 Hydraulic Motor Package (S550H, S570H, S590H, S630H, S650H) (T550H, T590H, , T595H, T630H, T650H)	**$1,257.00**	**24%**	**$0.00**	**$955.32**
(S510, S550, S550H, S530, S570, S570H, S590, S590H, S595, S595H) **(S630, S630H, S650, S650H, S740, S750, S770, S850) (A770)** **(T550, T550H, T590, T590H, T595, T595H) (T630, T630H, T650, T650H, T740, T750, T770)**					
M7004	**SB200 x 78" Snowblower**	**$5,299.00**	**24%**	**$0.00**	**$4,027.24**
M7004-R01-C02	6.2 Hydraulic Motor Package (S510, S550, S530, S570, S590, S595) (T550, T590, T595)	**$1,125.00**	**24%**	**$0.00**	**$855.00**
M7004-R01-C03	8.0 Hydraulic Motor Package (S630, S650, S740, S750, S770, S850) (A770) (T630, T650, T740, T750, T770) (S550H, S570H, S590H) (T550H, T590H, T595)	**$1,189.00**	**24%**	**$0.00**	**$903.64**
M7004-R01-C04	9.6 Hydraulic Motor Package (S550H, S570H, S590H, S630H, S650H) (T550H, T590H, T630H, T650H)	**$1,257.00**	**24%**	**$0.00**	**$955.32**
	Must order a hydraulic motor package with the SB240 Snowblowers & 7 pin attachment control				

Part Number	SB240 Snowblower Description	SLP in US$	Discount Percent	Labor	Price
(S550H, S570H, S590H, S595H) (S630H, S650H, S740, S750, S770) (A770) (T550H, T590H, T595H) **(T630H, T650H, T740*, T750*, T770*)**					
M7005	**SB240 x 72" Snowblower**	**$6,472.00**	**24%**	**$0.00**	**$4,918.72**
M7005-R01-C03	8.0 Hydraulic Motor Package (S750, S770) (A770) (T740*, T750*, T770*) (S550H, S570H, S590H, S595H) (T550H, T590H, T595H)	**$1,189.00**	**24%**	**$0.00**	**$903.64**
M7005-R01-C04	9.6 Hydraulic Motor Package (S550H, S570H, S590H, S595H, S630H, S650H) (T550H, T590H, T595H, T630H, T650H) *** Narrow Track Option Required**	**$1,257.00**	**24%**	**$0.00**	**$955.32**
	Must order a hydraulic motor package with the SB240 Snowblowers & 7 pin attachment control				
(S630H, S650H, S740, S750, S770, S850) (A770) (T550H, T590H) (T630H, T650H, T740, T750, T770, T870)					
M7006	**SB240 x 84" Snowblower**	**$6,601.00**	**24%**	**$0.00**	**$5,016.76**
M7006-R01-C03	8.0 Hydraulic Motor Package (S740, S750, S770) (A770) (T740, T750*, T770*)	**$1,189.00**	**24%**	**$0.00**	**$903.64**
M7006-R01-C04	9.6 Hydraulic Motor Package (S630H, S650H) (T550H, T590H, T630H, T650H)	**$1,257.00**	**24%**	**$0.00**	**$955.32**

Part Number	SBX240 Snowblower Description	SLP in US$	Discount Percent	Labor	Price
	Approved for use with loaders equipped with 37 GPM high flow only				
(S550H, S570H, S590H, S595H, S630H, S650H) (S740H, S750H, S770H) (A770H) (T740H, T750H, T770H)					
M7009	**SBX240 x 72"** (Snowblower includes hydraulic motor package)	**$8,268.00**	**24%**	**$0.00**	**$6,283.68**
(S740H, S750H, S770H, S850H) (A770H) (T740H, T750H, T770H, T870H)					
M7010	**SBX240 x 84" (blower includes hyd motor pkg)** (Snowblower includes hydraulic motor package)	**$8,422.00**	**24%**	**$0.00**	**$6,400.72**

Part Number	Accessories Description	SLP in US$	Discount Percent	Labor	Price
6958978	**Truck Loading Chute** (For SB240 and SBX240 Snowblowers, will not fit SB200) (For use with high flow loaders only) (Includes deflector control, support mount and hoses) (Price includes $270 for installation)	**$1,622.00**	**24%**	**$270.00**	**$1,502.72**

Part Number	Sod Layer Description	SLP in US$	Discount Percent	Labor	Price

(S450, S510, S550, S530, S570, S590, S595) (S630, S650, S750, S770, S850) (A770) (T450, T550, T590, T595 (T630, T650, T740, T750, T770, T870)					
6906783	**Sod Layer**	**$3,928.00**	**24%**	**$0.00**	**$2,985.28**

Part Number	Soil Conditioner Description	SLP in US$	Discount Percent	Labor	Price

(S70) (L23, L28)					
6958310	**48" Soil Conditioner, Manual Angle**	**$6,671.00**	**24%**	**$0.00**	**$5,069.96**
(S450, S510, S550, S550H, S530, S570, S570H, S590, S590H, S595, S595H) (S630, S630H, S650, S650H, S740, S750, S750H, S770, S770H) (A770, A770H) (T450, T550, T550H, T590, T590H, T595H) (T630, T630H, T650, T650H)					
6906513	**72" Soil Conditioner, Manual Angle**	**$8,614.00**	**24%**	**$0.00**	**$6,546.64**
7133945	**72" Soil Conditioner, Hydraulic Angle and Depth** (Loader must be equipped with an Attachment Control Kit)	**$9,360.00**	**24%**	**$0.00**	**$7,113.60**
(S550H, S570H, S590H, S595, S595H, S630H, S650H, S740H, S750H, S770H) (A770H) (T550H, T590H, T595H) (T630H, T650H, T740H, T750H, T770H)					
7133944	**72" Soil Conditioner, High Flow Hydraulic Angle and Depth** (Loader must be equipped with an Attachment Control Kit)	**$9,684.00**	**24%**	**$0.00**	**$7,359.84**
(S530, S570, S570H, S590, S590H, S595, S595H) (S630, S630H, S650, S650H, S740, S750, S750H, S770, S770H, S850) (A770, A770H) (T550, T550H, T590, T590H, T595H) (T630, T630H, T650, T650H, T750, T740H, T750H, T770, T770H, T870)					
7133946	**84" Soil Conditioner, Hydraulic Angle and depth** (Loader must be equipped with an Attachment Control Kit)	**$9,899.00**	**24%**	**$0.00**	**$7,523.24**
(S630H, S650H, S740H, S750H, S770H, S850H) (A770H) (T630H, T650H, T750H, T770H, T870H)					
7133947	**84" Soil Conditioner, High Flow Hydraulic Angle and Depth** (Loader must be equipped with an Attachment Control Kit)	**$10,330.00**	**24%**	**$0.00**	**$7,850.80**

Part Number	Spreader Description	SLP in US$	Discount Percent	Labor	Price

(S450, S510, S550, S530, S570, S590, S595) (S630, S650, S740, S750, S770, S850) (A770) (T450, T550, T590, T595) (T630, T650, T750, T770, T870)					
7157284	**HSB Spreader**	**$3,628.00**	**24%**	**$0.00**	**$2,757.28**

Part Number	Steel Tracks Description	SLP in US$	Discount Percent	Labor	Price

Complete Track Package

Each part number includes a set of tracks, web binder, hardware, and if required, wheel spacers and lift arm stops.

(S510, S530, S550, S570, S590, S595)					
7222581	**10.00-16.5 (72" loader width)** (Order PN 7233132 if loader is equipped with 31-12-16.5 tires)	**$3,395.00**	**24%**	**$0.00**	**$2,580.20**
(S590, S595)					
7233132	**31-12-16.5 (76" loader width)** (Order PN 7222581 if loader is equipped with 10-16.5 tires)	**$3,058.00**	**24%**	**$0.00**	**$2,324.08**
(S630, S650)					
7178955	**12.00-16.5 (79" loader width)**	**$3,580.00**	**24%**	**$0.00**	**$2,720.80**
(S740, S750, S770)					
7191754	**12.00-16.5 (79" loader width)**	**$4,330.00**	**24%**	**$0.00**	**$3,290.80**
(S850)					
7191757	**14.00-17.5 (86" loader width)** **Note on use of poly fill tires with steel tracks - Only pneumatic tires with Superflex formula poly fill manufactured by Arnco are permitted for use inside steel tracks. Bobcat factory poly-filled tires meet this requirement. All other tires are considered non-approved. The use of non-approved tires will void the loader and track warranties.**	**$5,011.00**	**24%**	**$0.00**	**$3,808.36**

Part Number	Stump Grinder Description	SLP in US$	Discount Percent	Labor	Price

SG30 Stump Grinder

SG60 and SGX60 Stump Grinder

(S70) (L23, L28)					
7100641	SG30 Stump Grinder (Loader must be equipped with a 14-Pin Attachment Control Kit)	$5,275.00	24%	$0.00	$4,009.00
(S550H, S530, S530H, S570, S570H, S590, S590H, S595, S595H) (S630, S630H, S650, S650H, S740, S740H, S750, S770, S850) (A770) (T550, T550H, T590, T590H, T595, T595H, T630, T630H, T650, T650H, T740, T750, T770, T870)					
6808034	SG60 Stump Grinder ***Not approved for use with 37 GPM High Flow Loaders** (Loader must be equipped with an Attachment Control Kit) (When used on loaders equipped with a 14-Pin Attachment Control Kit, a 14-Pin Attach T Harness Kit is required	$9,292.00	24%	$0.00	$7,061.92
(S530H, S570H, S595H) (S630H, S650H, S740H, S750H, S770H, S850H) (A770H) (T550H, T590H, T595H, T630H, T650H, T740H, T750H, T770H, T870H)					
7112201	SG360 Stump Grinder (Loader must be equipped with an Attachment Control Kit) (When used on loaders equipped with a 14-Pin Attachment Control Kit, a 14-Pin Attachment T-Harness is required	$9,617.00	24%	$0.00	$7,308.92

Part Number	Sweeper Description	SLP in US$	Discount Percent	Labor	Price

(MT55, MT85) (S70) (L23, L28)					
7138898	44" Sweeper	$3,388.00	24%	$0.00	$2,574.88
(S450, T450) (L28)					
7138870	54" Sweeper	$3,697.00	24%	$0.00	$2,809.72
(S450, S510, S550, S530, S570, S590, S595) (T450, T550, T590, T595)					
6707144	60" Sweeper	$4,012.00	24%	$0.00	$3,049.12
(S510, S550, S530, S570, S590, S595, S630, S650, S740, S750, S770) (A770) (T550, T590, T595) (T630, T650)					
6707837	72" Sweeper	$4,436.00	24%	$0.00	$3,371.36
(S630, S650, S740, S750, S770) (A770) (T630, T650, T740, T750, T770)					
7112646	84" Sweeper	$4,963.00	24%	$0.00	$3,771.88

Part Number	Accessories Description	SLP in US$	Discount Percent	Labor	Price
6714219	Gutter Brush (Add-on to the 60" and 72" Sweeper) (incs hoses, steel bristles, mtg frame, hardware and control valve) (Price includes $270 for installation)	$1,416.00	24%	$270.00	$1,346.16
7122418	Gutter Brush (Add-on to the 84" Sweeper) (incls hoses, steel bristles, mtg frame, hardware and control valve) (Price includes $270 for installation)	$1,331.00	24%	$270.00	$1,281.56
7147900	WHEEL KIT, 84"	$1,009.00	24%	$270.00	$1,036.84

Part Number	Three-Point Hitch Adapter Description	SLP in US$	Discount Percent	Labor	Price

(S100, S130, S150, S160, S175, S185, S205) (S450, S510, S530, S550, S570, S590, S595, S630, S650, S740, S750, S770) (A770) (T110, T140, T180, T190) (T450, T550, T590, T595, T630, T650, T740, T750, T770)					
7110394	THREE-POINT HITCH ADAPTER, CATEGORY "I AND II"	$971.00	24%	$270.00	$1,007.96

Part Number	Tiller Description	SLP in US$	Discount Percent	Labor	Price

(MT50, MT52, MT55, MT85) (S70, S100) (T110) (L23, L28)					
7196028	40" Rotary Tiller	$4,272.00	24%	$0.00	$3,246.72
(S450, S510, S550, S550H, S530, S530H, S570, S570H, S590, S590H, S595, S595H) (S630, S630H, S650, S650H, S740, S750, S750H, S770, S770H) (T450, T550, T550H, T590, T590H, T595, T595H) (T630, T630H, T650, T650H)					
7104371	62" Rotary Tiller	$4,899.00	24%	$0.00	$3,723.24
(S550, S550H, S530, S530H, S570, S570H, S590, S590H, S595H) (S630, S630H, S650, S650H,S740, S740H, S750, S750H, S770, S770H) (A770, A770H) (T630, T630H, T650, T650H, T740, T740H, T750, T750H, T770, T770H) (T550, T550H, T590, T590H, T595H)					
7102125	76" Rotary Tiller	$5,956.00	24%	$0.00	$4,526.56

Part Number	Tilt Tach Description	SLP in US$	Discount Percent	Labor	Price

(S450, S510, S550, S530, S570, S590, S595) (S630, S650) (T450, T550, T590, T595)					
7101600	Tilt-Tatch (Interface between the Loader's Bob-Tach and non-hydraulic attachments)	$2,461.00	24%	$0.00	$1,870.36

Use of Tilt-Tatch will reduce Operating Capacity and Tip Load by approximately 20%. See the Tilt-Tatch Operators Manual for New Load Ratings.

Tilt-Tatch can be used with non-hydraulic attachments only.

Part Number	Tree Spade Description	SLP in US$	Discount Percent	Labor	Price

ACD Tree Spades

Tree Spades are designed for fingertip spade control on G-Series and newer loaders only. The switches located on the loader's steering lever control Tree Spades. Loaders must be equipped with a 7-Pin control Kit

(S510, S550, S530, S570, S590, S595, S630, S650, S740, S750, S770, SB50) (A770) **(T550, T590, T595) (T630, T650, T740, T750, T770, T870)**					
7149485	**32" Convertible Tree Spade, Cone** (Must also order Pendant Control Kit or 7-Pin ACD Conversion Kit)	**$12,172.00**	**24%**	**$0.00**	**$9,250.72**
7149442	**32" Convertible Tree Spade, Modified** (Must also order Pendant Control Kit or 7-Pin ACD Conversion Kit)	**$12,172.00**	**24%**	**$0.00**	**$9,250.72**
(S510, S550, S530, S570, S590, S595, S630, S650, S740, S750, S770, SB50) (A770) **(T550, T590, T595) (T630, T650, T740, T750, T770, T870)**					
7149488	**36" Convertible Tree Spade, Cone** (Must also order Pendant Control Kit or 7-Pin ACD Conversion Kit)	**$12,953.00**	**24%**	**$0.00**	**$9,844.28**
7149445	**36" Convertible Tree Spade, Modified** (Must also order Pendant Control Kit or 7-Pin ACD Conversion Kit)	**$12,953.00**	**24%**	**$0.00**	**$9,844.28**
(S740, S750, S770, SB50) (A770) **(T740, T750, T770, T870)**					
7149491	**44" Convertible Tree Spade, Cone** (Must also order Pendant Control Kit p/n 7152664 or 7-Pin ACD Conversion Kit)	**$17,710.00**	**24%**	**$0.00**	**$13,459.60**
7149306	**44" Convertible Tree Spade, Modified** (Must also order Pendant Control Kit p/n 7152664 or 7-Pin ACD Conversion Kit)	**$17,710.00**	**24%**	**$0.00**	**$13,459.60**

Note: Rear Stabilizers are required and counterweights are recommended when using the tree spade

Part Number	Accessories Description	SLP in US$	Discount Percent	Labor	Price
	(All Loader Series)				
7152662	**ACD Conversion Kit, 7-Pin** (Price includes $90 for installation)	**$299.00**	**24%**	**$90.00**	**$317.24**
7152663	**Pendant Control Kit, 3-Blade** (For 24" through 36" Convertible Tree Spades) (No additional Control Kits needed.) (Price includes $90 for installation)	**$570.00**	**24%**	**$90.00**	**$523.20**
7152664	**Pendant Control Kit, 4-Blade** (For 44" Convertible Tree Spades) (No additional Control Kits needed.) (Will operate 4-Blade convertible Tree Spades) (Price includes $90 for installation)	**$642.00**	**24%**	**$90.00**	**$577.92**

Part Number	Trench Compactor Description	SLP in US$	Discount Percent	Labor	Price

(S510, S550, S530, S570, S590, S595) (A770) **(S630, S650, S740, S750, S770)** **(T450, T550, T590, T565, T630, T650, T740, T750, T770)**					
6905277	**Trench Compactor** (Comes standard with a 4 ½" Pad and compacts trenches up to 8" wide) (Wheel-type vibratory compactor)	**$9,431.00**	**24%**	**$0.00**	**$7,167.56**

Part Number	Trencher Description	SLP in US$	Discount Percent	Labor	Price

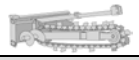

Part Number	LT112 Trencher Description	SLP in US$	Discount Percent	Labor	Price
(MT50, MT52, MT55, MT85) (S70) (L23, L28)					
M7011	**LT112 Trencher** (Includes mounting frame, hoses, couplers, 2' depth, manual sidesbift, 4" trench cleaner) (Can only order one factory installed chain option per trencher model)	**$3,659.00**	**24%**	**$0.00**	**$2,780.84**
	2' Chain Options are L654" Double Standard (DS) Anti-Back Flex (ABF)				
M7011-R01-C02	**2' x 4" cup teeth, Single Standard pattern**	**$481.00**	**24%**	**$0.00**	**$365.56**
M7011-R01-C01	**2' x 4" Cup Teeth, Double Standard Pattern**	**$587.00**	**24%**	**$0.00**	**$446.12**
M7011-R01-C03	**2' x 4" cup & carbide teeth, Double Standard pattern**	**$1,073.00**	**24%**	**$0.00**	**$815.48**
M7011-R01-C05	**2' x 4" Shark/Cup teeth, Double Standard pattern**	**$713.00**	**24%**	**$0.00**	**$541.88**
M7011-R01-C06	**2' x 6" Shark/Cup teeth, Double Standard pattern**	**$898.00**	**24%**	**$0.00**	**$682.48**

Part Number	LT113 Trencher Description	SLP in US$	Discount Percent	Labor	Price
(MT50, MT52, MT55, MT85) (S70)					
M7014	LT113 Trencher (Includes mounting frame, hoses, couplers, 3' depth, manual sideshift, 4" trench cleaner) (Can only order one factory installed chain option per trencher model)	$3,893.00	24%	$0.00	$2,958.68
	3' Chain Options are 1.654" Double Standard (DS) Anti-Back Flex (ABF)				
M7014-R01-C02	3' x 4" Cup Teeth, Single Standard Pattern	$465.00	24%	$0.00	$353.40
M7014-R01-C04	3' x 6" Cup Teeth, Single Standard Pattern	$496.00	24%	$0.00	$376.96
M7014-R01-C01	3' x 4" Cup Teeth, Double Standard Pattern	$529.00	24%	$0.00	$402.04
M7014-R01-C03	3' x 4" Cup & Carbide Teeth, Double Standard Pattern	$1,083.00	24%	$0.00	$823.08
M7014-R01-C06	3' x 4" Shark/Cup Teeth, Double Standard Pattern	$872.00	24%	$0.00	$662.72
M7014-R01-C07	3' x 6" Shark/Cup Teeth, Double Standard Pattern	$1,088.00	24%	$0.00	$826.88

Part Number	LT213 Trencher Description	SLP in US$	Discount Percent	Labor	Price
(S450) (T450)					
M7013	LT213 Trencher (Includes 3' depth, manual sideshift, and 4" trench cleaner) (Hyd Side Shift is available) (Can only order one factory installed chain option per trencher model)	$3,918.00	24%	$0.00	$2,977.68
	Chains are 1.654" Double Standard (DS) Anti-Back Flex (ABF)				
M7013-R01-C02	3' x 4" Cup Teeth, Single Standard Pattern	$465.00	24%	$0.00	$353.40
M7013-R01-C04	3' x 6" Cup Teeth, Single Standard Pattern	$496.00	24%	$0.00	$376.96
M7013-R01-C01	3' x 4" Cup Teeth, Double Standard Pattern	$529.00	24%	$0.00	$402.04
M7013-R01-C03	3' x 4" Cup & Carbide Teeth, Double Standard Pattern	$1,083.00	24%	$0.00	$823.08
M7013-R01-C06	3' x 4" Shark/Carbide Teeth, Double Standard Pattern	$872.00	24%	$0.00	$662.72
M7013-R01-C07	3' x 6" Shark/Carbide Teeth, Double Standard Pattern	$1,014.00	24%	$0.00	$770.64
7274548	Dealer Installed Hydraulic Side Shift Can be installed on the LT313 and LT213 trenchers hydraulically side shift the trencher boom 23.1 inches	$735.00	24%	$202.50	$761.10

Part Number	LT313 Trencher Description	SLP in US$	Discount Percent	Labor	Price
(S450, S510, S550, S530, S570, S590, S595) (S630, S650, S740, S750, S770) (A770) (T450. T550. T590) (T630. T650)					
M7015	LT313 Trencher (Includes 3' depth, manual sideshift, 6" trench cleaner) (Hyd Side Shift is available) (Can only order one factory installed chain option per trencher model)	$4,726.00	24%	$0.00	$3,591.76
	All chains are 2.0" Double Standard (DS) Anti-Back Flex (ABF)				
M7015-R01-C13	No Chain Option	N/C			
M7015-R01-C02	3' x 6" Cup Teeth in Single Standard Pattern	$656.00	24%	$0.00	$498.56
M7015-R01-C05	3' x 8" Cup Teeth in Single Standard Pattern	$692.00	24%	$0.00	$525.92
M7015-R01-C01	3' x 6" Cup Teeth in Double Standard Pattern	$1,088.00	24%	$0.00	$826.88
M7015-R01-C04	3' x 6" Shark Tooth/Cup Teeth in Double Standard Pattern	$1,098.00	24%	$0.00	$834.48
M7015-R01-C03	3' x 6" Cup & Carbide Teeth in Double Standard Pattern	$1,780.00	24%	$0.00	$1,352.80
M7015-R01-C06	3' x 8" Cup & Carbide Teeth in Double Standard Pattern	$1,823.00	24%	$0.00	$1,385.48
M7015-R01-C14	3' x 8" Shark Tooth/Cup Teeth in Double Standard Pattern	$1,326.00	24%	$0.00	$1,007.76
	The LT313 is assembled as a 4' dig depth when ordering the 4' chain option *(Boom Guide included with 4' factory installed chain)*				
M7015-R01-C08	4' x 6" Cup Teeth in Single Standard Pattern	$809.00	24%	$0.00	$614.84
M7015-R01-C11	4' x 8" Cup Teeth in Single Standard Pattern	$908.00	24%	$0.00	$690.08
M7015-R01-C07	4' x 6" Cup Teeth in Double Standard Pattern	$999.00	24%	$0.00	$759.24
M7015-R01-C10	4' x 6" Shark Tooth/Cup Teeth in Double Standard Pattern	$1,289.00	24%	$0.00	$979.64
M7015-R01-C09	4' x 6" Cup & Carbide Teeth in Double Standard Pattern	$1,997.00	24%	$0.00	$1,517.72
M7015-R01-C12	4' x 8" Cup & Carbide Teeth in Double Standard Pattern	$2,134.00	24%	$0.00	$1,621.84
M7015-R01-C15	4' x 8" Shark Tooth/Cup Teeth in Double Standard Pattern	$1,463.00	24%	$0.00	$1,111.88
7274548	Dealer Installed Hydraulic Side Shift Can be installed on the LT313 and LT213 trenchers hydraulically side shift the trencher boom 23.1 inches	$735.00	24%	$202.50	$761.10

Part Number	LT414 High Flow Trencher Description	SLP in US$	Discount Percent	Labor	Price
(S530H, S530H, S570H, S590H, S595H) (S630H, S650H, S740H, S750H, S770H) (A770H) (T550H, T590H, T595H) (T630H, T650H, T740H, T750H, T770H)	4' Depth				
(S630H, S650H, S740H, S750H, S770H) (A770H) (T630H, T650H, T740H, T750H, T770H)	5' Depth				
M7016	LT414 Trencher (High Flow) (Includes 4' or 5' depth, hydraulic sideshift, and 6" trench cleaner) (Can only order one factory installed chain option per trencher model) (Loader must be equipped with High Flow auxiliary hydraulics)	$7,049.00	24%	$0.00	$5,357.24
	Chains are 2.0" Single Standard (SS) or Double Standard (DS) Anti-Back Flex (ABF)				
M7016-R01-C13	No Chain Option	N/C			
M7016-R01-C08	4' x 6" Cup Teeth, Single Standard Pattern	$834.00	24%	$0.00	$633.84
M7016-R01-C07	4' x 6" Cup Teeth, Double Standard Pattern	$961.00	24%	$0.00	$730.36
M7016-R01-C09	4' x 6" Cup & Carbide Teeth, Double Standard Pattern	$1,997.00	24%	$0.00	$1,517.72
M7016-R01-C10	4' x 6" Shark Tooth/Cup Teeth in Double Standard Pattern	$1,653.00	24%	$0.00	$1,256.28
M7016-R01-C11	4' x 8" Cup Teeth, Single Standard Pattern	$904.00	24%	$0.00	$687.04
M7016-R01-C12	4' x 8" Cup & Carbide Teeth in Double Standard Pattern	$2,076.00	24%	$0.00	$1,577.76
M7016-R01-C14	4' x 8" Shark/Carbide Teeth in Double Standard Pattern	$1,532.00	24%	$0.00	$1,164.32
M7016-R01-C04	5' x 6" Cup Teeth, Single Standard Pattern	$993.00	24%	$0.00	$754.68
M7016-R01-C01	5' x 6" Cup Teeth, Double Standard Pattern	$1,136.00	24%	$0.00	$863.36
M7016-R01-C03	5' x 6" Cup & Carbide Teeth, Double Standard Pattern	$2,365.00	24%	$0.00	$1,797.40
M7016-R01-C02	5' x 6" Shark Tooth/Cup Teeth in Double Standard Pattern	$1,885.00	24%	$0.00	$1,432.60
M7016-R01-C06	5' x 8" Cup Teeth, Single Standard Pattern	$1,035.30	24%	$0.00	$786.83
M7016-R01-C05	5' x 8" Cup & Carbide Teeth in Double Standard Pattern	$2,588.00	24%	$0.00	$1,966.88

Part Number	LT405 High Flow Trencher Description	SLP in US$	Discount Percent	Labor	Price
(S530H, S570H, S590H, S595H, S630H, S650H, S740H, S750H, S770H) (A770H) (T550H, T590H, T595H) (T630H, T650H, T740H, T750H, T770H)					
6906100	**LT405 Trencher (High Flow)** (Includes 3' – 4' adjustable boom setup at 4', double standard ABF chain, Hydraulic Sideshift, 6" trench cleaner, hoses and couplers) **(Must also order teeth)**	$11,455.00	24%	$0.00	$8,705.80

Part Number	Vibratory Roller Description	SLP in US$	Discount Percent	Labor	Price

(S450, S510, S550, S530, S570, S590, S595) (T450, T550, T590, T595)					
7165403	**48" Vibratory Roller with Padded Drum**	$9,035.00	24%	$0.00	$6,866.60
7165404	**48" Vibratory Roller with Smooth Drum**	$8,754.00	24%	$0.00	$6,653.04
(S590, S595, S630, S650, S750, S770, S850) (A770) (T630, T650, T740, T750, T770, T870)					
7165401	**73" Vibratory Roller with Padded Drum**	$10,286.00	24%	$0.00	$7,817.36
7165402	**73" Vibratory Roller with Smooth Drum**	$10,006.00	24%	$0.00	$7,604.56
(S750, S770, S850) (A770) (T630, T740, T750, T770, T870)					
7165400	**80" Vibratory Roller with Smooth Drum**	$10,840.00	24%	$0.00	$8,238.40

Part Number	Wheel Saw Description	SLP in US$	Discount Percent	Labor	Price

18" Wheel Saw with 3" Wheel

(Must order the two part numbers listed below—18" Wheel Saw and 3" Wheel)

(Must also order Attachment Control Kit)

(S590H, S595H, S630H, S650H, S740H, S750H, S770H, S850, S850H) (A770H) (T550H, T590H, T595H) (T630H, T650H, T740H, T750H, T770H, T870, T870H)					
6729537	**WS18 Wheel Saw**	$16,152.00	24%	$0.00	$12,275.52
6729544	**3" Wheel** (Weight 650 lbs. Wheel Width 3.13") **Note: There is no Trench Cleaner available with the 3" Wheel.**	$3,580.00	24%	$0.00	$2,720.80

18" Wheel Saw with 6" Wheel and 6" Trench Cleaner

(Must order the three part numbers listed below—18" Wheel Saw, 6" Wheel and 6" Trench Cleaner)

(Must also order Attachment Control Kit)

(S590H, S595H, S630H, S650H, S740H, S750H, S770H, S850, S850H) (A770H) (T550H, T590H, T595H) (T630H, T650H, T740H, T750H, T770H, T870, T870H)					
6729537	**WS18 Wheel Saw**	$16,152.00	24%	$0.00	$12,275.52
6729546	**6" Wheel** (Weight 395 lbs., Wheel Width 6.25")	$3,850.00	24%	$0.00	$2,926.00
6729550	**6" Trench Cleaner** (Weight 95 lbs.)	$1,304.00	24%	$0.00	$991.04

Part Number	Wheel Saw Description	SLP in US$	Discount Percent	Labor	Price

24" Wheel Saw with 6" Wheel and 6" Trench Cleaner

(Must order the three part numbers listed below—24" Wheel Saw, 6" Wheel and 6" Trench Cleaner)

(Must also order Attachment Control Kit)

(S740H, S750H, S770H, S850, S850H) (A770H) (T750H, T770H, T870, T870H)					
6729566	**WS24 Wheel Saw**	$18,655.00	24%	$0.00	$14,177.80
6729573	**6" Wheel** (Weight 585 lbs., Wheel Width 6.25")	$4,551.00	24%	$0.00	$3,458.76
6729577	**6" Trench Cleaner** (Weight 130 lbs.)	$1,495.00	24%	$0.00	$1,136.20

24" Wheel Saw with 8" Wheel and 8" Trench Cleaner

(Must order the three part numbers listed below—24" Wheel Saw, 8" Wheel and 8" Trench Cleaner)

(Must also order Attachment Control Kit)

(S740H, S750H, S770H, S850, S850H) (A770H) (T750H, T770H, T870, T870H)					
6729566	**WS24 Wheel Saw**	$18,655.00	24%	$0.00	$14,177.80
6729575	**8" Wheel** (Weight 610 lbs., Wheel Width 7.88")	$5,280.00	24%	$0.00	$4,012.80
6729579	**8" Trench Cleaner** (Weight 140 lbs.)	$1,600.00	24%	$0.00	$1,216.00

Loader Bucket Matrix

		Standard Duty				Heavy Duty					Severe Duty				Light Material						
	product [sku]	54	62	68	78	56	67	68	76	80	78	80	86	97	68	78	80	86	97	98
	Part #	7272770	7272768	7272771	7272768	7280882	7272678	7272679	7272680	7272681	7826150	7826128	7826128	7826127	7276108	7276101	7276102	7276103	7276104	7276105
	SAE Heap	30.7	32.0	33.3	34.5	19.7	19.7	30.9	30.9	34.1	19.5	24.8	24.8	27.5	24.1	27.3	29.7	33.1	36.1	39.8
	Oper. WT	118	109	104	173	442	479	518	546	578	752	816	849	892	329	452	469	726	864	916
	SLP in US $	$682	$718	$735	$782	$879	$938	$1,015	$1,126	$1,225	$1,505	$1,637	$1,701	$1,856	$1,157	$1,291	$1,379	$1,443	$1,710	$1,807
Skid Steer Loaders (SSL)	Sku																			
	S450	x	x	x		x	x								x	x	x	x	x	
	S510		x	x	x		x	x	x						x	x	x	x	x	
	S530		x	x	x		x	x	x						x	x	x	x	x	
	S570		x	x	x		x	x	x						x	x	x	x	x	
	S590		x	x	x		x	x	x						x	x	x	x	x	
	S595		x	x	x		x	x	x						x	x	x	x	x	
	S630			x	x			x	x	x	x	x	x		x	x	x	x	x	
	S650			x	x			x	x	x	x	x	x		x	x	x	x	x	
	S740							x	x	x	x	x	x	x	x	x	x	x	x	x
	S750							x	x	x	x	x	x	x	x	x	x	x	x	x
	S770							x	x	x	x	x	x	x	x	x	x	x	x	x
	S850									x	x	x	x	x			x	x	x	x
Compact Track Loaders (CTL)	CTL																			
	T450	x	x	x		x	x								x					
	T550			x	x			x	x		x				x	x	x	x		
	T590			x	x			x	x		x				x	x	x	x		
	T595			x	x			x	x		x				x	x	x	x		
	T550R			x	x			x	x		x				x	x	x	x		
	T590			x	x			x	x		x				x	x	x	x		
	T595			x	x			x	x		x				x	x	x	x		
	T630R				x				x	x	x	x				x	x	x		
	T630				x				x	x	x	x				x	x	x		
	T650				x				x	x	x	x				x	x	x		
	T650R				x				x	x	x	x				x	x	x		
	T740R										x	x	x	x			x	x	x	x
	T750R										x	x	x	x		x	x	x	x	x
	T770R										x	x	x	x		x	x	x	x	x
	T870												x	x				x	x	x

T-631
Tractors: Skid Steers Attachments
727-1019

Skid Steer / Compact Track Loaders

FIXED PRICING
(BASE UNIT INFORMATION)
Specification 3.0

October, 2019

Vendor Name:	**L&L Rentals Inc.**
Contact Person:	**Kyle Lind/ Cliff Lind**
Street Address:	**11461 Spudville Road**
P.O. Box:	
City, State, Zip	**Hibbing, MN 55746**
Phone #:	**(218)262-5232**
Toll Free #:	
Email Address:	kyle@landlrentalsinc.com
Website:	https://www.landlrentalsinc.com

Spec #	Information Requested	Answer
3.1	**MAKE AND MODEL**	Wacker Neuson ST45 (Vertical Lift)
	Engine Type and SAE net HP	Kohler KDI3404 w/ DOC 74 HP
	Tier	Tier 4 Final
	Length w/o attachments	117.5 in
	Height with operator cab	83.2 in
	Ground clearance	9 in
	Maximum height to bucket hinge pin	134.8 in
	Breakout force	6941 lbf
	Reach at maximum height	38.2 in
	Dump angle at maximum height	44 degrees
	Dump height with standard bucket	107.8 in
	Front clearance circle with standard bucket	88.6 in
	Rear clearance circle	71.3 in
	Tipping load - SAE rated	9000 lbs
	Rated operating capacity - SAE	4500 lbs
	Standard bucket capacity - SAE heaped rating	.62 CYD
	Operating weight - SAE rated	10267 lbs
	Travel speed	6.4 mph (One Speed)/ 9.6 mph (Two Speed)
	Fuel tank capacity	40 US gal
	Cold weather starting assist	Glow Plugs
	Battery CCA	950 cca
	Alternator size - amps	120A
	Transmission type	Hydrostatic
	Tire / Track size / width	17.7" Track Width/ 78"
	Final drive chains and drive method	Hydraulic motor direct coupled to track drive
	Final drive chain adjustment / maintenance	None Required
	Gauges / instrumentation	Gauges- Fuel Level, Engine Coolant Temp., Engine Oil Pressure, Hour Meter, Hydraulic Oil Temperature, Engine Speed, Hours to Next Maintenance Indicators- Engine Oil Pressure Fault, Coolant Over-Temp, Low Battery Charge, Hydraulic Oil Filter Restriction, Hydraulic Over Temperature, Air FIlter Restriction
	Pump type - GPM and PSI	22.1 gpm/ 3480 psi
	Control valves	
	Hydraulic oil cooler	Included air to oil
	Drive controls	H-Pattern or ISO joystick controls
	Lift and tilt controls	H-Pattern or ISO joystick controls
	Engine speed control	Mechanical Hand and Foot Controls
	Work lights - front	Included 2 single beam working lights
	Work lights - rear	Included 2 single beam working lights
	Warranty	3 year 3000 hour full/ 4 year 4000 hour powertrain/ 5 year 5000 hour electrical system
	BASE UNIT PRICE:	$65,408.64

SKID / COMPACT TRACK LOADER
OPTIONS - FIXED PRICING
SPECIFICATION 4.0

Spec #	Description	Price
	Price for base unit:	$ 65,408.64
4.1	**Skid/Compact Track Loader Options:** Use this section to offer additional skid/track loader options such as hand controls, gauges, heater, enclosed cab etc.. These options should be for skid steer power unit and not attachments.	
	Enclosed ROPS/FOPS Level 1 Cab w/ A/C	Std
	2 Front Single Beam Working Lights	Std
	2 Rear Working Lights	Std
	Hydraulic Coupler	Std
	Hydraulic Bucket Leveling	Std
	Foot Throttle	Std
	Ride Control	Std
	Selectabel EH Joystick Controls (ISO/H-Pattern)	Std
	5.7" Color Display	Std
	Polycarbonate Door	$ 1,978.47
	Diamond Coating	$ 3,018.83
	Counterweights 510lbs (3 on each side)	$ 617.99
	Counterweights 340lbs (2 on each side)	$ 413.48
	Counterweights 170lbs (1 on each side)	$ 240.08
	Air-Ride Seat	$ 373.46
	Heated Air-Ride Seat	$ 520.18
	3" Seat Belt	$ 142.27
	Back-Up Camera (Requires 5.7" Color Display)	$ 751.37
	Radio	$ 404.59
	Dual Beam Work Lights	$ 120.04
	Strobe Beacon	$ 235.64
	Hazard Light Package (Strobe Beacon + 4-Way Flashers)	$ 480.17
	High Flow (31.7 GPM) (Not Available with Mechanical H-F Controls)	$ 844.74
	Zero-Drift Hydraulic Valve	$ 208.96
	14-Pin Attachment Control	$ 400.14
	Block Heater (110V)	$ 120.04
	Cyclonic Engine Pre-Cleaner	$ 257.87
	Exhaust Scavenging Pre-Cleaner	$ 302.33
	Dual Battery (Includes Disconnect)	$ 280.10
	Battery Disconnect	$ 35.57
	Synthetic Hydraulic Oil (Recommended for Cold Start Applications)	$ 133.38
	Rear Light Guarding Kit	$ 222.30
	Fire Extinguisher Kit	$ 195.62
	Rearview Mirror Kit	$ 231.19
	Auxiliary LED Lighting Kit	$ 680.24
	Rear Receiver	$ 288.99
	Locking Fuel Cap Kit	$ 146.72
	Level II FOPS Kit	$ 2,400.84
4.2	**Bucket Options:** Use this section to offer bucket options such as standard, snow or combination buckets, etc..	
	36" Tree Scoop Bucket	826.96
	42" Tree Scoop Bucket	933.66
	48" Tree Scoop Bucket	1142.62
	66" Rock Bucket (2" Tine Spacing-22 Tines)	2054.05
	66" Rock Bucket (3" Tine Spacing-16 Tines)	1858.43
	74" Bolt on Cutting Edge (For Fertilizer/Slurry Bucket)	471.28
	74" Fertilizer/Slurry Bucket w/ BOE (1.45 Cubic Yard)	2854.33
	75" Rock Bucket (2" Tine Spacing- 24 tines)	2134.08
	75" Rock Bucket (3" Tine Spacing-18 Tines)	2022.93
	78" 0.62 Cubic Yard Low Profile Bucket, Pre-Drilled for BOE	1493.86
	78" 0.62 Cubic Yard Low Profile Bucket, With Teeth	1605.01
	78" 0.77 Cubic Yard Long Floor Low Profile Bucket, Pre-Drilled for BOE	1560.55
	78" 0.77 Cubic Yard Long Floor Low Profile Bucket, With Teeth	1729.49
	78" 4-In-1 Multi-Purpose Construction Bucket, Pre-Drilled for BOE (Hose Kit Included)	4205.92
	78" 4-In-1 Multi-Purpose Construction Bucket, with Teeth (Hose Kit Included)	4468.23
	78" Bolt On Cutting Edge	377.91
	78" Bolt On Spill Guard (Compatible with 78" 4-In-1 Multipurpose Buckets Only)	168.95
	78" Tooth Bar (Fits over BOE)	915.88
	80" 0.64 Cubic Yard Low Profile Bucket, Pre-Drilled for BOE	1524.98
	80" 0.64 CUbic Yard Low Profile Bucket, With Teeth	1658.36
	80" 0.79 Cubic Yard Long Floor Low Profile Bucket, Pre-Drilled for BOE	1613.9
	80" 0.79 Cubic Yard Long Floor Low Profile Bucket, With Teeth	1778.4
	80" 0.91 Cubic Yard High-Capacity Bucket, Pre-Drilled for BOE	1742.83
	80" 0.91 Cubic Yard High-Capacity Bucket, With Teeth	1996.25
	80" Bolt On Cutting Edge	377.91
	80" Tooth Bar (Fits over BOE)	813.62
	82" 0.65 Cubic Yard Low Profile Bucket, Pre-Drilled for BOE	1556.1
	82" 0.65 Cubic Yard Low Profile Bucket, With Teeth	1707.26
	82" 0.81 Cubic Yard Long Floor Low Profile Bucket, Pre-Drilled for BOE	1649.47
	82" 0.81 Cubic Yard Long Floor Low Profile Bucket, With Teeth	1800.63
	82" Bolt On Cutting Edge	457.94
	82" Tooth Bar (Fits over BOE)	915.88
	84" 0.67 Cubic Yard Low Profile Bucket, Pre-Drilled for BOE	1573.88
	84" 0.67 Cubic Yard Low Profile Bucket, With Teeth	1787.29
	84" 0.84 Cubic Yard Long Floor Low Profile Bucket, Pre-Drilled for BOE	1573.88
	84" 0.84 Cubic Yard Long Floor Low Profile Bucket, With Teeth	1862.87
	84" 0.99 Cubic Yard High-Capacity Bucket, Pre-Drilled for BOE	1885.1
	84" 0.99 Cubic Yard High-Capacity Bucket, With Teeth	2240.78
	84" 1.62 Cubic Yard High-Capacity Light Material Bucket, Pre-Drilled for BOE	2080.73
	84" 4-In-1 Multi-Purpose Construction Bucket, Pre-Drilled for BOE (Hose Kit Included)	4352.63
	84" 4-In-1 Multi-Purpose Construction Bucket, with Teeth (Hose Kit Included)	4592.72
	84" Bolt On Cutting Edge	453.49
	84" Bolt on Spill Guard (Compatible with 84" 4-in-1 Multipurpose Buckets Only)	177.84
	84" Rock Bucket (3" Tine Spacing- 20 Tines)	2138.53
	84" Tooth Bar (Fits over BOE)	906.98
	96" 2.00 Cubic Yard High-Capacity Light Material Bucket, Pre-Drilled for BOE	2298.58
	96" Bolt On Cutting Edge	457.94

SKID / COMPACT TRACK LOADER
OPTIONS - FIXED PRICING
SPECIFICATION 4.0

Spec #	Description	Price
4.3	**Overtire tracks:**	
	Use this section to offer overtire tracks.	
4.4	**Forks:**	
	Use this section to offer fork options, such as pallet forks, bale handler, etc..	
	42" Pallet Forks (5500 LB)	1058.15
	42" Pallet Forks (6000 LB)	1311.57
	48" Pallet Forks (5500 LB)	1133.73
	48" Pallet Forks (6000 LB)	1498.3
	60" Pallet Forks (6200 LB)	1805.08
	72" Pallet Forks (6200 LB)	2120.74
4.5	**Adaptor Plate:**	
	Use this section to offer adaptor plate options.	
4.6	**Snowblower:**	
	Use this section to offer snowblower options.	
4.7	**Sweeper:**	
	Use this section to offer sweeper options.	
4.8	**Backhoe:**	
	Use this section to offer backhoe options.	
4.9	**Planer:**	
	Use this section to offer planer options.	
4.10	**Snow Plow:**	
	Use this section to offer snow plow options.	
	72" Hydraulic Snow Angle Blade (Hose Kit Included)	3023.28
	72" Low Profile Snow Push	2636.48
	84" Hydraulic Snow Angle Blade (Hose Kit Included)	3143.32
	84" Hydraulic Snow V Blade, with Trip Edge (Hose Kit Included) (Hydraulic Sequencing Control (No Contro	4926.17
	84" Low Profile Snow Push	2720.95
	96" Hydraulic Snow V Blade, with Trip Edge (Hose Kit Included) (Hydraulic Sequencing Control (No Contro	5055.1
	96" Low Profile Snow Push	3009.94
	108" Hydraulic Snow V Blade, with Trip Edge (Hose Kit Included) (Hydraulic Sequencing Control (No Contr	5175.14
	120" Hydraulic Snow V Blade, with Trip Edge (Hose Kit Included) (Hydraulic Sequencing Control (No Contr	5304.08
	120" Low Profile Snow Push	3370.07
4.11	**Hydraulic breaker:**	
	Use this section to offer hydraulic breaker options.	
4.12	**Grapple:**	
	Use this section to offer grapple options.	
4.13	**Landscape:**	
	Use this section to offer landscape options.	
4.14	**Grader:**	
	Use this section to offer grader options.	
4.15	**Auger:**	
	Use this section to offer auger options.	

SKID / COMPACT TRACK LOADER
OPTIONS - FIXED PRICING
SPECIFICATION 4.0

Spec #	Description	Price
4.16	**Wheel saw:** Use this section to offer wheel saw options.	
4.17	**Vibratory roller:** Use this section to offer vibratory roller options.	
4.18	**Other:** Use this section to offer any other option not already covered.	
4.19	**EXTENDED WARRANTY OPTIONS** Use this section to offer performance/warranty options, number these items starting with 20.1, 20.2, 20.3, etc. **(Specify years, miles or hours extended term covers.)**	
4.20	**NEW EQUIPMENT RENTAL PROGRAM** If rental programs are available on the new equipment offered, with the option to purchase, list the hourly/weekly/monthly rental rate. Indicate the percent of rental fee paid by the purchaser that will be applied to the purchase price. See Solicitation Special Terms & Conditions.	
	Hourly Rental Rate:	$
	Weekly Rental Rate:	$
	Monthly Rental Rate:	$
	Percent (%) of Rental Fee applied to purchase price:	%
	If the new rental equipment is purchased and finance Charges are applicable for the actual rental term only. State the actual interest rate here: _____	
4.21	**VENDOR OWNED RENTAL RETURN OR DEMO EQUIPMENT PROGRAM** (See Solicitation Special Terms and Conditions.) **DEDUCT** cost per Used Hour from the original Contract Price	$
4.22	**DELIVERY STARTING POINT - City, State, Zip**	Hibbing, MN 55746
	(See Special Terms and Conditions - no flat rate allowed.) **Price Per Loaded Mile:**	$4 ($250 minimum)
4.23	**INSTALLATION - PER HOUR (Hourly Shop Rate):** Installation services may be requested on an "as needed" basis - see special terms and conditions.)	$95.00
4.24	**PRICE FOR ADDITIONAL MANUALS** (1 of each included at no cost, per specs) **ADDITIONAL SERVICE MANUAL**	
	Digital	$20.00
	Paper	$85.00
	ADDITIONAL PARTS MANUAL	
	Digital	$15.00
	Paper	$155.00
	PRICE FOR ADDITIONAL OPERATIONS MANUAL	
	Digital	$20.00
	Paper	$85.00
4.25	**DISCOUNT OFF LIST PRICE FOR RELATED PARTS & ACCESSORIES** (See Special Terms and Conditions)	%

T-631
Tractors: Skid Steers Attachments
727-1019

Skid Steer / Compact Track Loaders

FIXED PRICING
(BASE UNIT INFORMATION)
Specification 3.0

October, 2019

Vendor Name:	**L&L Rentals Inc.**
Contact Person:	**Kyle Lind/ Cliff Lind**
Street Address:	**11461 Spudville Road**
P.O. Box:	
City, State, Zip	**Hibbing, MN 55746**
Phone #:	**(218)262-5232**
Toll Free #:	
Email Address:	kyle@landlrentalsinc.com
Website:	https://www.landlrentalsinc.com

Spec #	Information Requested	Answer
3.1	**MAKE AND MODEL**	Wacker Neuson SW16 (Radial Lift)
	Engine Type and SAE net HP	Kohler KDI 1903 w/DOC 56 HP
	Tier	Tier 4 Final
	Length w/o attachments	106.6 in
	Height with operator cab	81.5 in
	Ground clearance	7.6 in
	Maximum height to bucket hinge pin	118.1 in
	Breakout force	5300 lbf (bucket)
	Reach at maximum height	34.1 in
	Dump angle at maximum height	42 degrees
	Dump height with standard bucket	90.6 in
	Front clearance circle with standard bucket	84.1 in
	Rear clearance circle	61.9 in
	Tipping load - SAE rated	3200 lbs
	Rated operating capacity - SAE	1600 lbs
	Standard bucket capacity - SAE heaped rating	.47 CYD
	Operating weight - SAE rated	6170 lbs
	Travel speed	8 mph (One Speed)/ 12 mph (Two Speed)
	Fuel tank capacity	30 US gal
	Cold weather starting assist	Glow Plugs
	Battery CCA	950 cca
	Alternator size - amps	100A
	Transmission type	Hydrostatic
	Tire / Track size / width	Camso 10"x16.5" All-Terrain 65.9 in
	Final drive chains and drive method	#100 ASME/ANSI Heavy Series Roller Chain, Single Strand Continuous; Bowtie Chain Drive System
	Final drive chain adjustment / maintenance	500 hours
	Gauges / instrumentation	Gauges- Fuel Level, Engine Coolant Temp., Engine Oil Pressure, Hour Meter, Hydraulic Oil Temperature, Engine Speed, Hours to Next maintenance Indicators- Engine Oil Pressure Fault, Coolant Over-Temp, Low Battery Charge, Hydraulic Oil Filter Restriction, Hydraulic Over Temperature, Air Filter Restriction
	Pump type - GPM and PSI	Danfoss Tandem Hydrostatic Axial Piston 20 gpm/ 3500 PSI
	Control valves	Electrically Proportional for working and auxiliary functions
	Hydraulic oil cooler	Included air to oil
	Drive controls	Mechanical Hand-Foot Controls
	Lift and tilt controls	Mechanical Hand-Foot Controls
	Engine speed control	Mechanical Hand Controls
	Work lights - front	Included 2 single beam working lights
	Work lights - rear	Included 2 single beam working lights
	Warranty	3 year 3000 hour full/ 4 year 4000 hour powertrain/ 5 year 5000 hour electrical system
	BASE UNIT PRICE:	40800.98

SKID / COMPACT TRACK LOADER
OPTIONS - FIXED PRICING
SPECIFICATION 4.0

Spec #	Description	Price
	Price for base unit:	$40,800.98
4.1	**Skid/Compact Track Loader Options:** Use this section to offer additional skid/track loader options such as hand controls, gauges, heater, enclosed cab etc.. These options should be for skid steer power unit and not attachments.	
	Enclosed ROPS Cab w/ HVAC	Std
	Two-Speed Drive	Std
	Hydraulic Coupler	Std
	Variable Speed Fan	Std
	Hydraulic Bucket Leveling	Std
	Mechanical Suspension Seat	Std
	Dual Armrest	Std
	Ride Control	Std
	2 Front Single Beam Working Lights	Std
	2 Rear Working Lights	Std
	Polycarbonate Door	$1,978.47
	Selectable EH Joystick Controls (ISO/H-Pattern)	$2,071.84
	10x16.5 Premium Tires (In place of standard tires)	$142.27
	10x16.5 Severe Duty Tires (In Place of Standard Tires)	$377.91
	10x16.5 Solid Tires (In Place of Standard Tires)	$1,129.28
	12x16.5 Standard Tires (In Place of 10x16.5 Standard Tires)	$164.50
	12x16.5 Premium Tires (In Place of Standard Tires)	$400.14
	12x16.5 Severe Duty Tires (In Place of Standard Tires)	$751.37
	Diamond Coating	$3,018.83
	Air-Ride Seat	$373.46
	Heated Air-Ride Seat	$520.18
	3" Seat Belt	$142.27
	Cyclonic Engine Pre-Cleaner	$257.87
	14-Pin Attachment Control	$400.14
	Block Heater (110V)	$120.04
	Counterweights 170 LBS (1 on Each Side)	$240.08
	Counterweights 340 LBS (2 on Each Side)	$413.48
	Dual Beam Work Lights	$120.04
	Radio	$404.59
	Strobe Beacon	$235.64
	Zero-Drift Hydraulic Valve	$208.96
	Battery Disconnect	$35.57
	Foot Throttle (For EH Controls Only)	$142.27
	Synthetic Hydraulic Oil (Recommended for Cold Start Applications)	$97.81
	Rear Light Guarding Kit	$222.30
	Fire Extinguisher Kit	$195.62
	Hazard Lights Kit (Strobe+4 Way Flashers)	$724.70
	Single Point Lift Kit	$1,934.01
	Rear Receiver	$288.99
	Level II FOPS Kit	$2,400.84
	Locking Fuel Cap	$146.72
	Rearview Mirror Kit	$231.19
	Auxiliary Lighting Kit- Radial	$680.24
	LED Flood Light	$342.34
4.2	**Bucket Options:** Use this section to offer bucket options such as standard, snow or combination buckets, etc..	
	66" 1.1 Cubic Yard Specialty Light Material Bucket	$1,885.10
	66" Bolt on Cutting Edge (Light Material Bucket)	$435.71
	68" .74 Cubic Yard High Capacity Bucket	$1,329.35
	68" 0.47 Cubic Yard Low Profile Bucket	$1,124.84
	68" 0.62 Cubic Yard Long Floor Low Profile Bucket	$1,222.65
	68" Bolt on Cutting Edge	$351.23
	68" Bolt on Spill Guard (High Capacity Bucket)	$213.41
	75" 0.59 Cubic Yard Low Profile Bucket	$1,311.57
	75" 0.71 Cubic Yard Long Floor Low Profile Bucket	$1,396.04
	75" Bolt on cutting Edge	$346.79
	84" 1.5 Cubic Yard Snow Bucket	$1,685.03
	96" 1.7 Cubic Yard Snow Bucket	$1,845.09
	Bolt on Side Cutters (Sold in Pairs)	$71.14
	Replacement Bolt On Tooth Assembly (Individual Tooth)	$40.01
4.3	**Overtire tracks:** Use this section to offer overtire tracks.	

SKID / COMPACT TRACK LOADER
OPTIONS - FIXED PRICING
SPECIFICATION 4.0

Spec #	Description	Price
4.4	**Forks:**	
	Use this section to offer fork options, such as pallet forks, bale handler, etc..	
	42" Pallet Forks (45" wide, 2" Drop, 5500 LBS)	$1,058.15
	42" Pallet Forks (45" wide, 2" Drop, 6000 LBS)	$1,311.57
	48" Pallet Forks (45" wide, 2" Drop, 5500 LBS)	$1,133.73
	48" Pallet Forks (45" wide, 2" Drop, 6000 LBS)	$1,498.30
4.5	**Adaptor Plate:**	
	Use this section to offer adaptor plate options.	
4.6	**Snowblower:**	
	Use this section to offer snowblower options.	
4.7	**Sweeper:**	
	Use this section to offer sweeper options.	
4.8	**Backhoe:**	
	Use this section to offer backhoe options.	
4.9	**Planer:**	
	Use this section to offer planer options.	
4.10	**Snow Plow:**	
	Use this section to offer snow plow options.	
	72" Hydrualic Snow Angle Blade (Includes Hose Kit)	$3,023.28
	72" Low Profile Snow Push	$2,636.48
	84" Hydraulic Snow Angle Blade (Hose Kit Included)	$3,143.32
	84" Hydraulic Snow V Blade, with Trip Edge (Hose Kit Included) (Hydraulic Sequencing Control (No Control	$4,926.17
	84" Low Profile Snow Push	$2,720.95
	96" Hydraulic Snow V Blade, With Trip Edge (Hose Kit Included) (Hydraulic Sequencing Control (No Contro	$5,055.10
	96" Low Profile Snow Push	$3,009.94
4.11	**Hydraulic breaker:**	
	Use this section to offer hydraulic breaker options.	
4.12	**Grapple:**	
	Use this section to offer grapple options.	
4.13	**Landscape:**	
	Use this section to offer landscape options.	
4.14	**Grader:**	
	Use this section to offer grader options.	
4.15	**Auger:**	
	Use this section to offer auger options.	

SKID / COMPACT TRACK LOADER
OPTIONS - FIXED PRICING
SPECIFICATION 4.0

Spec #	Description	Price
4.16	**Wheel saw:** Use this section to offer wheel saw options.	
4.17	**Vibratory roller:** Use this section to offer vibratory roller options.	
4.18	**Other:** Use this section to offer any other option not already covered.	
4.19	**EXTENDED WARRANTY OPTIONS** Use this section to offer performance/warranty options, number these items starting with 20.1, 20.2, 20.3, etc. **(Specify years, miles or hours extended term covers.)**	
4.20	**NEW EQUIPMENT RENTAL PROGRAM** If rental programs are available on the new equipment offered, with the option to purchase, list the hourly/weekly/monthly rental rate. Indicate the percent of rental fee paid by the purchaser that will be applied to the purchase price. See Solicitation Special Terms & Conditions.	
	Hourly Rental Rate:	$
	Weekly Rental Rate:	$
	Monthly Rental Rate:	$
	Percent (%) of Rental Fee applied to purchase price:	%
	If the new rental equipment is purchased and finance Charges are applicable for the actual rental term only. State the actual interest rate here: _____	
4.21	**VENDOR OWNED RENTAL RETURN OR DEMO EQUIPMENT PROGRAM** (See Solicitation Special Terms and Conditions.) **DEDUCT** cost per Used Hour from the original Contract Price	$
4.22	**DELIVERY STARTING POINT - City, State, Zip**	Hibbing, MN 55746
	(See Special Terms and Conditions - no flat rate allowed.) **Price Per Loaded Mile:**	$4 ($250 minimum)
4.23	**INSTALLATION - PER HOUR (Hourly Shop Rate):** Installation services may be requested on an "as needed" basis - see special terms and conditions.)	$95.00
4.24	**PRICE FOR ADDITIONAL MANUALS** (1 of each included at no cost, per specs)	
	ADDITIONAL SERVICE MANUAL	
	Digital	$20.00
	Paper	$85.00
	ADDITIONAL PARTS MANUAL	
	Digital	$15.00
	Paper	$155.00
	PRICE FOR ADDITIONAL OPERATIONS MANUAL	
	Digital	$20.00
	Paper	$85.00
4.25	**DISCOUNT OFF LIST PRICE FOR RELATED PARTS & ACCESSORIES** (See Special Terms and Conditions)	%

T-631
Tractors: Skid Steers Attachments
727-1019

Skid Steer / Compact Track Loaders

FIXED PRICING
(BASE UNIT INFORMATION)
Specification 3.0

October, 2019

Vendor Name:	**L&L Rentals Inc.**
Contact Person:	**Kyle Lind/ Cliff Lind**
Street Address:	**11461 Spudville Road**
P.O. Box:	
City, State, Zip	**Hibbing, MN 55746**
Phone #:	**(218)262-5232**
Toll Free #:	
Email Address:	kyle@landlrentalsinc.com
Website:	https://www.landlrentalsinc.com

Spec #	Information Requested	Answer
3.1	**MAKE AND MODEL**	Wacker Neuson SW17 (Radial Lift)
	Engine Type and SAE net HP	Kohler KDI 2504 w/DOC 74 HP
	Tier	Tier 4 Final
	Length w/o attachments	106.6 in
	Height with operator cab	81.5 in
	Ground clearance	7.6 in
	Maximum height to bucket hinge pin	118.1 in
	Breakout force	5300 lbf
	Reach at maximum height	34.1 in
	Dump angle at maximum height	42 degrees
	Dump height with standard bucket	90.6 in
	Front clearance circle with standard bucket	84.1 in
	Rear clearance circle	61.9 in
	Tipping load - SAE rated	3400 lbs
	Rated operating capacity - SAE	1700 lbs
	Standard bucket capacity - SAE heaped rating	.47 CYD
	Operating weight - SAE rated	6245 lbs
	Travel speed	8 mph (One Speed)/ 12 mph (Two Speed)
	Fuel tank capacity	30 US gal
	Cold weather starting assist	Glow Plugs
	Battery CCA	950 cca
	Alternator size - amps	100 A
	Transmission type	Hydrostatic
	Tire / Track size / width	Camso 10"x16.5" All-Terrain/ 65.9 in
	Final drive chains and drive method	#100 ASME/ANSI Heavy Series Roller Chain, Single Strand Continuous; Bowtie chain drive system
	Final drive chain adjustment / maintenance	500 hours
	Gauges / instrumentation	Gauges- Fuel Level, Engine Coolant Temp., Engine Oil Pressure, Hour Meter, Hydraulic Oil Temperature, Engine Speed, Hours to Next Maintenance Indicators- Engine Oil Pressure Fault, Coolant Over-Temp, Low Battery Charge, Hydraulic Oil Filter Restriction, Hydraulic Over-Temp, Air Filter Restriction
	Pump type - GPM and PSI	Danfoss Tandem Hydrostatic Axial Piston- 20 gpm/3500 psi
	Control valves	Electrically Proportional for working and auxiliary functions
	Hydraulic oil cooler	Included air to oil
	Drive controls	Mechanical Hand-Foot Controls
	Lift and tilt controls	Mechanical Hand-Foot Controls
	Engine speed control	Mechanical Hand Controls
	Work lights - front	Included 2 single beam working lights
	Work lights - rear	Included 2 single beam working lights
	Warranty	3 year 3000 hour full/ 4 year 4000 hour powertrain/ 5 year 5000 hour electrical system
	BASE UNIT PRICE:	$43,990.32

SKID / COMPACT TRACK LOADER
OPTIONS - FIXED PRICING
SPECIFICATION 4.0

Spec #	Description	Price
	Price for base unit:	$ 43,990.32
4.1	**Skid/Compact Track Loader Options:** Use this section to offer additional skid/track loader options such as hand controls, gauges, heater, enclosed cab etc.. These options should be for skid steer power unit and not attachments.	
	Enclosed ROPS/FOPS Level 1 Cab w/HVAC	Std
	2-Speed Drive	Std
	Hydraulic Coupler	Std
	Variable Speed Fan	Std
	Hydraulic Bucket Leveling	Std
	Mechanical Suspension Seat	Std
	Dual Armrest	Std
	Ride Control	Std
	2 Front Single Beam Working Lights	Std
	2 Rear Working Lights	Std
	Polycarbonate Door	$ 1,978.47
	Selectable EH Joystick Controls (ISO/H-Pattern)	$ 2,071.84
	10x16.5 Premium Tires (In place of Standard Tires)	$ 142.27
	10x16.5 Severe Duty Tires (In Place of Standard Tires)	$ 377.91
	10x16.5 Solid Tires (In Place of Standard Tires)	$ 1,129.28
	12x16.5 Sandard Tires (In place of 10x16.5 Standard Tires)	$ 164.50
	12x16.5 Premium Tires (In Place of Standard Tires)	$ 400.14
	12x16.5 Severe Duty Tires (In Place of Standard Tires)	$ 751.37
	Diamond Coating	$ 3,018.83
	Air-Ride Seat	$ 373.46
	Heated Air-Ride Seat	$ 520.18
	3" Seat Belt	$ 142.27
	Cyclonic Engine Pre-Cleaner	$ 257.87
	High Flow (30 GPM)	$ 844.74
	14-Pin Attachment Control	$ 400.14
	Block Heater (110V)	$ 120.04
	Counterweights 170 LBS (1 on Each Side)	$ 240.08
	Counterweights 340 LBS (2 on Each Side)	$ 413.48
	Dual Beam Work Lights	$ 120.04
	Radio	$ 404.59
	Strobe Beacon	$ 235.64
	Zero-Drift Hydraulic Valve	$ 208.96
	Battery Disconnect	$ 35.57
	Foot Throttle (Only Available with EH controls)	$ 142.27
	Synthetic Hydraulic Oil (Recommended for Cold Start Applications)	$ 97.81
	Rear Light Guarding Kit	$ 222.30
	Fire Extinguisher Kit	$ 195.62
	Hazard Lights Kit (Strobe and 4-Way Flashers)	$ 480.17
	Single Point Lift Kit	$ 1,934.01
	Rear Receiver	$ 288.99
	Level II FOPS Kit	$ 2,400.84
	Locking Fuel Cap Kit	$ 146.72
	Rearview Mirror Kit	$ 231.19
	Auxiliary Lighting Kit- Radial	$ 680.24
	LED Flood Light	$ 342.34
4.2	**Bucket Options:** Use this section to offer bucket options such as standard, snow or combination buckets, etc..	
	66" 1.1 Cubic Yard Specialty Light Material Bucket	$1,885.10
	66" Bolt on Cutting Edge (Light Material Bucket)	$435.71
	68" .74 Cubic Yard High Capacity Bucket	$1,329.35
	68" 0.47 Cubic Yard Low Profile Bucket	$1,124.84
	68" 0.62 Cubic Yard Long Floor Low Profile Bucket	$1,222.65
	68" Bolt on Cutting Edge	$351.23
	68" Bolt on Spill Guard (High Capacity Bucket)	$213.41
	75" 0.59 Cubic Yard Low Profile Bucket	$1,311.57
	75" 0.71 Cubic Yard Long Floor Low Profile Bucket	$1,396.04
	75" Bolt on cutting Edge	$346.79
	84" 1.5 Cubic Yard Snow Bucket	$1,685.03
	96" 1.7 Cubic Yard Snow Bucket	$1,845.09
	Bolt on Side Cutters (Sold in Pairs)	$71.14
	Replacement Bolt On Tooth Assembly (Individual Tooth)	$40.01
4.3	**Overtire tracks:** Use this section to offer overtire tracks.	

SKID / COMPACT TRACK LOADER
OPTIONS - FIXED PRICING
SPECIFICATION 4.0

Spec #	Description	Price
4.4	**Forks:**	
	Use this section to offer fork options, such as pallet forks, bale handler, etc..	
	42" Pallet Forks (45" wide, 2" Drop, 5500 LBS)	1058.15
	42" Pallet Forks (45" wide, 2" Drop, 6000 LBS)	1311.57
	48" Pallet Forks (45" wide, 2" Drop, 5500 LBS)	1133.73
	48" Pallet Forks (45" wide, 2" Drop, 6000 LBS)	1498.3
4.5	**Adaptor Plate:**	
	Use this section to offer adaptor plate options.	
4.6	**Snowblower:**	
	Use this section to offer snowblower options.	
4.7	**Sweeper:**	
	Use this section to offer sweeper options.	
4.8	**Backhoe:**	
	Use this section to offer backhoe options.	
4.9	**Planer:**	
	Use this section to offer planer options.	
4.10	**Snow Plow:**	
	Use this section to offer snow plow options.	
	72" Hydrualic Snow Angle Blade (Includes Hose Kit)	3023.28
	72" Low Profile Snow Push	2636.48
	84" Hydraulic Snow Angle Blade (Hose Kit Included)	3143.32
	84" Hydraulic Snow V Blade, with Trip Edge (Hose Kit Included) (Hydraulic Sequencing Control (No Controller Required))	4926.17
	84" Low Profile Snow Push	2720.95
	96" Hydraulic Snow V Blade, With Trip Edge (Hose Kit Included) (Hydraulic Sequencing Control (No Controller Required))	5055.1
	96" Low Profile Snow Push	3009.94
	120" Low Profile Snow Push	3370.07
4.11	**Hydraulic breaker:**	
	Use this section to offer hydraulic breaker options.	
4.12	**Grapple:**	
	Use this section to offer grapple options.	
4.13	**Landscape:**	
	Use this section to offer landscape options.	
4.14	**Grader:**	
	Use this section to offer grader options.	
4.15	**Auger:**	
	Use this section to offer auger options.	

SKID / COMPACT TRACK LOADER
OPTIONS - FIXED PRICING
SPECIFICATION 4.0

Spec #	Description	Price
4.16	**Wheel saw:**	
	Use this section to offer wheel saw options.	
4.17	**Vibratory roller:**	
	Use this section to offer vibratory roller options.	
4.18	**Other:**	
	Use this section to offer any other option not already covered.	
4.19	**EXTENDED WARRANTY OPTIONS**	
	Use this section to offer performance/warranty options, number these items starting with 20.1, 20.2, 20.3, etc. **(Specify years, miles or hours extended term covers.)**	
4.20	**NEW EQUIPMENT RENTAL PROGRAM**	
	If rental programs are available on the new equipment offered, with the option to purchase, list the hourly/weekly/monthly rental rate. Indicate the percent of rental fee paid by the purchaser that will be applied to the purchase price. See Solicitation Special Terms & Conditions.	
	Hourly Rental Rate:	$
	Weekly Rental Rate:	$
	Monthly Rental Rate:	$
	Percent (%) of Rental Fee applied to purchase price:	%
	If the new rental equipment is purchased and finance Charges are applicable for the actual rental term only. State the actual interest rate here: _____	
4.21	**VENDOR OWNED RENTAL RETURN OR DEMO EQUIPMENT PROGRAM**	
	(See Solicitation Special Terms and Conditions.) **DEDUCT** cost per Used Hour from the original Contract Price	$
4.22	**DELIVERY STARTING POINT - City, State, Zip**	Hibbing, MN 55746
	(See Special Terms and Conditions - no flat rate allowed.) **Price Per Loaded Mile:**	$4 ($250 minimum)
4.23	**INSTALLATION - PER HOUR (Hourly Shop Rate):**	
	Installation services may be requested on an "as needed" basis - see special terms and conditions.)	$95.00
4.24	**PRICE FOR ADDITIONAL MANUALS** (1 of each included at no cost, per specs)	
	ADDITIONAL SERVICE MANUAL	
	Digital	$20.00
	Paper	$85.00
	ADDITIONAL PARTS MANUAL	
	Digital	$15.00
	Paper	$155.00
	PRICE FOR ADDITIONAL OPERATIONS MANUAL	
	Digital	$20.00
	Paper	$85.00
4.25	**DISCOUNT OFF LIST PRICE FOR RELATED PARTS & ACCESSORIES** (See Special Terms and Conditions)	%

Skid Steer / Compact Track Loaders

FIXED PRICING
(BASE UNIT INFORMATION)
Specification 3.0

Vendor Name: **L&L Rentals Inc.**
Contact Person: **Kyle Lind/ Cliff Lind**
Street Address: **11461 Spudville Road**
P.O. Box:
City, State, Zip **Hibbing, MN 55746**
Phone #: **(218)262-5232**
Toll Free #:
Email Address: kyle@landlrentalsinc.com
Website: https://www.landlrentalsinc.com

Spec #	Information Requested	Answer
3.1	**MAKE AND MODEL**	Wacker Neuson SW20 (Vertical Lift)
	Engine Type and SAE net HP	Kohler KDI 1903 w/ DOC 56 HP
	Tier	Tier 4 Final
	Length w/o attachments	106.6 in
	Height with operator cab	81.5 in
	Ground clearance	7.6 in
	Maximum height to bucket hinge pin	124 in
	Breakout force	5300 lbf (bucket)
	Reach at maximum height	34.1 in
	Dump angle at maximum height	42 degrees
	Dump height with standard bucket	96.5 in
	Front clearance circle with standard bucket	84.1 in
	Rear clearance circle	61.9 in
	Tipping load - SAE rated	4000 lbs
	Rated operating capacity - SAE	2000 lbs
	Standard bucket capacity - SAE heaped rating	.47 CYD
	Operating weight - SAE rated	6437 lbs
	Travel speed	8 mph (One Speed)/ 12 mph (Two Speed)
	Fuel tank capacity	30 US gal
	Cold weather starting assist	Glow Plugs
	Battery CCA	950 cca
	Alternator size - amps	100A
	Transmission type	Hydrostatic
	Tire / Track size / width	Camso 10"x16.5" All-Terrain 65.9 in
	Final drive chains and drive method	#100 ASME/ANSI Heavy Series Roller Chain, Single Strand Continuous; Bowtie chain drive system
	Final drive chain adjustment / maintenance	500 hours
	Gauges / instrumentation	Gauges- Fuel Level, Engine Coolant Temp., Engine Oil Pressure, Hour Meter, Hydraulic Oil Temperature, Engine Speed, Hours to Next Maintenance Indicators- Engine Oil Pressure Fault, Coolant Over-Temp, Low Battery Charge, Hydraulic Oil Filter Restriction, Hydraulic Over Temperature, Air Filter Restriction
	Pump type - GPM and PSI	Danfoss Tandem Hydrostatic Axial Piston- 20 gpm/ 3500 PSI
	Control valves	Electrically Proportional for working and auxiliary functions
	Hydraulic oil cooler	Included air to oil
	Drive controls	Mechanical Hand-Foot Controls
	Lift and tilt controls	Mechanical Hand-Foot Controls
	Engine speed control	Mechanical Hand Controls
	Work lights - front	Included 2 single beam working lights
	Work lights - rear	Included 2 single beam working lights
	Warranty	3 year 3000 hour full/ 4 year 4000 hour powertrain/ 5 year 5000 hour electrical system
	BASE UNIT PRICE:	$41,072.68

SKID / COMPACT TRACK LOADER
OPTIONS - FIXED PRICING
SPECIFICATION 4.0

Spec #	Description	Price
	Price for base unit:	$ 41,072.68
4.1	**Skid/Compact Track Loader Options:** Use this section to offer additional skid/track loader options such as hand controls, gauges, heater, enclosed cab etc.. These options should be for skid steer power unit and not attachments.	
	ROPS/FOPS Level 1 Cab 2/ HVAC	Std
	2 Front Single Beam Worklights	Std
	2 Rear Working Lights	Std
	Two-Speed Drive	Std
	Hydraulic Coupler	Std
	Variable Speed Fan	Std
	Hydraulic Bucket Leveling	Std
	Mechanical Suspension Seat	Std
	Dual Armrest	Std
	Ride Control	Std
	Polycarbonate Door	$ 1,978.47
	Selectable EH Joystick Controls (ISO/H-Pattern)	$ 2,071.84
	10x16.5 Premium Tires (In Place of Standard Tires)	$ 142.27
	10x16.5 Severe Duty Tires (In Place of Standard Tires)	$ 377.91
	10x16.5 Solid Tires (In Place of Standard Tires)	$ 1,129.28
	12x16.5 Standard Tires (In Place of 10x16.5 Standard Tires)	$ 164.50
	12x16.5 Premium Tires (In Place of Standard Tires)	$ 400.14
	12x16.5 Severe Duty Tires (In Place of Standard Tires)	$ 751.37
	Diamond Coating	$ 3,018.83
	Air-Ride Seat	$ 373.46
	Heated Air-Ride Seat	$ 520.18
	3" Seat Belt	$ 142.27
	Cyclonic Engine Pre-Cleaner	$ 257.87
	14-Pin Attachment Control	$ 400.14
	Block Heater (110V)	$ 120.04
	Counterweights 170lbs (1 on each side)	$ 240.08
	Counterweights 340lbs (2 on each side)	$ 413.48
	Dual Beam Work Lights	$ 120.04
	Radio	$ 404.59
	Strobe Beacon	$ 235.64
	Zero-Drift Hydraulic Valve	$ 208.96
	Battery Disconnect	$ 35.57
	Foot Throttle (Machine must have EH Joystick Controls)	$ 142.27
	Synthetic Hydraulic Oil (Recommended for Cold Start Applications)	$ 97.81
	Rear Lighting Guarding Kit	$ 222.30
	Fire Extinguisher Kit	$ 195.62
	Hazard Lights Kit (Strobe+4 Way Flashers)	$ 724.70
	Single Point Lift Kit	$ 1,934.01
	Rear Receiver	$ 288.99
	Level II FOPS Kit	$ 2,400.82
	Locking Fuel Cap Kit	$ 146.72
	Rearview Mirror Kit	$ 231.19
	Auxiliary Lighting Kit	$ 680.24
	LED Flood Light	$ 342.34
4.2	**Bucket Options:** Use this section to offer bucket options such as standard, snow or combination buckets, etc..	
	66" 1.1 Cubic Yard Specialty Light Material Bucket	1885.1
	66" Bolt on Cutting Edge (Light Material Bucket)	435.71
	68" .74 Cubic Yard High Capacity Bucket	1329.35
	68" 0.47 Cubic Yard Low Profile Bucket	1124.84
	68" 0.62 Cubic Yard Long Floor Low Profile Bucket	1222.65
	68" Bolt on Cutting Edge	351.23
	68" Bolt on Spill Guard (High Capacity Bucket)	213.41
	75" 0.59 Cubic Yard Low Profile Bucket	1311.57
	75" 0.71 Cubic Yard Long Floor Low Profile Bucket	1396.04
	75" Bolt on cutting Edge	346.79
	84" 1.5 Cubic Yard Snow Bucket	1685.03
	96" 1.7 Cubic Yard Snow Bucket	1845.09
	Bolt on Side Cutters (Sold in Pairs)	71.14
	Replacement Bolt On Tooth Assembly (Individual Tooth)	40.01
4.3	**Overtire tracks:** Use this section to offer overtire tracks.	

SKID / COMPACT TRACK LOADER
OPTIONS - FIXED PRICING
SPECIFICATION 4.0

Spec #	Description	Price
4.4	**Forks:**	
	Use this section to offer fork options, such as pallet forks, bale handler, etc..	
	42" Pallet Forks (45" wide, 2" Drop, 5500 LBS)	1058.15
	42" Pallet Forks (45" wide, 2" Drop, 6000 LBS)	1311.57
	48" Pallet Forks (45" wide, 2" Drop, 5500 LBS)	1133.73
	48" Pallet Forks (45" wide, 2" Drop, 6000 LBS)	1498.3
4.5	**Adaptor Plate:**	
	Use this section to offer adaptor plate options.	
4.6	**Snowblower:**	
	Use this section to offer snowblower options.	
4.7	**Sweeper:**	
	Use this section to offer sweeper options.	
4.8	**Backhoe:**	
	Use this section to offer backhoe options.	
4.9	**Planer:**	
	Use this section to offer planer options.	
4.10	**Snow Plow:**	
	Use this section to offer snow plow options.	
	72" Hydrualic Snow Angle Blade (Includes Hose Kit)	3023.28
	72" Low Profile Snow Push	2636.48
	84" Hydraulic Snow Angle Blade (Hose Kit Included)	3143.32
	84" Hydraulic Snow V Blade, with Trip Edge (Hose Kit Included) (Hydraulic Sequencing Control (No Control	4926.17
	84" Low Profile Snow Push	2720.95
	96" Hydraulic Snow V Blade, With Trip Edge (Hose Kit Included) (Hydraulic Sequencing Control (No Contro	5055.1
	96" Low Profile Snow Push	3009.94
4.11	**Hydraulic breaker:**	
	Use this section to offer hydraulic breaker options.	
4.12	**Grapple:**	
	Use this section to offer grapple options.	
4.13	**Landscape:**	
	Use this section to offer landscape options.	
4.14	**Grader:**	
	Use this section to offer grader options.	
4.15	**Auger:**	
	Use this section to offer auger options.	

SKID / COMPACT TRACK LOADER
OPTIONS - FIXED PRICING
SPECIFICATION 4.0

Spec #	Description	Price
4.16	**Wheel saw:**	
	Use this section to offer wheel saw options.	
4.17	**Vibratory roller:**	
	Use this section to offer vibratory roller options.	
4.18	**Other:**	
	Use this section to offer any other option not already covered.	
4.19	**EXTENDED WARRANTY OPTIONS**	
	Use this section to offer performance/warranty options, number these items starting with 20.1, 20.2, 20.3, etc. **(Specify years, miles or hours extended term covers.)**	
4.20	**NEW EQUIPMENT RENTAL PROGRAM**	
	If rental programs are available on the new equipment offered, with the option to purchase, list the hourly/weekly/monthly rental rate. Indicate the percent of rental fee paid by the purchaser that will be applied to the purchase price. See Solicitation Special Terms & Conditions.	
	Hourly Rental Rate:	$
	Weekly Rental Rate:	$
	Monthly Rental Rate:	$
	Percent (%) of Rental Fee applied to purchase price:	%
	If the new rental equipment is purchased and finance Charges are applicable for the actual rental term only. State the actual interest rate here: _____	
4.21	**VENDOR OWNED RENTAL RETURN OR DEMO EQUIPMENT PROGRAM**	
	(See Solicitation Special Terms and Conditions.) **DEDUCT** cost per Used Hour from the original Contract Price	$
4.22	**DELIVERY STARTING POINT - City, State, Zip**	Hibbing, MN 55746
	(See Special Terms and Conditions - no flat rate allowed.) **Price Per Loaded Mile:**	$4 ($250 minimum)
4.23	**INSTALLATION - PER HOUR (Hourly Shop Rate):**	
	Installation services may be requested on an "as needed" basis - see special terms and conditions.)	$95.00
4.24	**PRICE FOR ADDITIONAL MANUALS** (1 of each included at no cost, per specs)	
	ADDITIONAL SERVICE MANUAL	
	Digital	$20.00
	Paper	$85.00
	ADDITIONAL PARTS MANUAL	
	Digital	$15.00
	Paper	$155.00
	PRICE FOR ADDITIONAL OPERATIONS MANUAL	
	Digital	$20.00
	Paper	$85.00
4.25	**DISCOUNT OFF LIST PRICE FOR RELATED PARTS & ACCESSORIES** (See Special Terms and Conditions)	%

T-631
Tractors: Skid Steers Attachments
727-1019

Skid Steer / Compact Track Loaders

FIXED PRICING
(BASE UNIT INFORMATION)
Specification 3.0

October, 2019

Vendor Name:	**L&L Rentals Inc.**
Contact Person:	**Kyle Lind/ Cliff Lind**
Street Address:	**11461 Spudville Road**
P.O. Box:	
City, State, Zip	**Hibbing, MN 55746**
Phone #:	**(218)262-5232**
Toll Free #:	
Email Address:	kyle@landlrentalsinc.com
Website:	https://www.landlrentalsinc.com

Spec #	Information Requested	Answer
3.1	**MAKE AND MODEL**	Wacker Neuson SW21 (Vertical Lift)
	Engine Type and SAE net HP	Kohler KDI 2504 w/ DOC 74HP
	Tier	Tier 4 Final
	Length w/o attachments	106.6 in
	Height with operator cab	81.5 in
	Ground clearance	7.6 in
	Maximum height to bucket hinge pin	124 in
	Breakout force	5300 lbf
	Reach at maximum height	34.1 in
	Dump angle at maximum height	42 degrees
	Dump height with standard bucket	96.5 in
	Front clearance circle with standard bucket	84.1 in
	Rear clearance circle	61.9 in
	Tipping load - SAE rated	4200 lbs
	Rated operating capacity - SAE	2100 lbs
	Standard bucket capacity - SAE heaped rating	.47 CYD
	Operating weight - SAE rated	6512 lbs
	Travel speed	8 mph (One Speed)/ 12 mph (Two Speed)
	Fuel tank capacity	30 US gal
	Cold weather starting assist	Glow Plugs
	Battery CCA	950 cca
	Alternator size - amps	100A
	Transmission type	Hydrostatic
	Tire / Track size / width	Camso 10" X 16.5" All-Terrain 65.9 in
	Final drive chains and drive method	#100 ASME/ANSI Heavy Series Roller Chain, Single Strand Continuous; Bowtie chain drive system
	Final drive chain adjustment / maintenance	500 hours
	Gauges / instrumentation	Gauges- Fuel Level, Engine Coolant Temp., Engine Oil Pressure, Hour Meter, Hydraulic Oil Temperature, Engine Speed, Hours to Next Maintenance Indicators- Engine Oil Pressure Fault, Coolant Over-Temp., Low Battery Charge, Hydraulic Oil Filter Restriction, Hydraulic Over Temperature, Air Filter Restriction
	Pump type - GPM and PSI	Danfoss Tandem Hydrostatic Axial Piston- 20 gpm/3500 psi
	Control valves	Electrically Proportional for working and auxiliary functions
	Hydraulic oil cooler	Included air to oil
	Drive controls	Mechanical Hand-Foot Controls
	Lift and tilt controls	Mechanical Hand-Foot Controls
	Engine speed control	Mechanical Hand Controls
	Work lights - front	Included 2 single beam working lights
	Work lights - rear	Included 2 single beam working lights
	Warranty	3 year 3000 hour full/ 4 year 4000 hour powertrain/ 5 year 5000 hour electrical system
	BASE UNIT PRICE:	$46,184.82

SKID / COMPACT TRACK LOADER
OPTIONS - FIXED PRICING
SPECIFICATION 4.0

Spec #	Description	Price
	Price for base unit:	
4.1	**Skid/Compact Track Loader Options:** Use this section to offer additional skid/track loader options such as hand controls, gauges, heater, enclosed cab etc.. These options should be for skid steer power unit and not attachments.	
	ROPS/FOPS Level 1 Cab w/ HVAC	Std
	2 Front Single Beam Working Lights	Std
	2 Rear Working Lights	Std
	Two-Speed Drive	Std
	Hydraulic Coupler	Std
	Variable Speed Fan	Std
	Hydraulic Bucket Leveling	Std
	Mechanical Suspension Seat	Std
	Dual Armrest	Std
	Ride Control	Std
	Polycarbonate Door	$ 1,978.47
	Selectable EH Joystick Controls (ISO/H-Pattern)	$ 2,071.87
	10x16.5 Premium Tires (In Place of Standard Tires)	$ 142.27
	10x16.5 Severe Duty Tires (In Place of Standard Tires)	$ 377.91
	10x16.5 Solid Tires (In Place of Standard Tires)	$ 1,129.28
	12x16.5 Standard Tires (In Place of 10x16.5 Standard Tires)	$ 164.50
	12x16.5 Premium Tires (In Place of Standard Tires)	$ 400.14
	12x16.5 Severe Duty Tires (In Place of Standard Tires)	$ 751.37
	Diamond Coating	$ 3,018.83
	Air-Ride Seat	$ 373.46
	Heated Air-Ride Seat	$ 520.18
	3" Seat Belt	$ 142.27
	Cyclonic Engine Pre-Cleaner	$ 257.87
	High Flow (30 GPM)	$ 844.74
	14-Pin Attachment Control	$ 400.14
	Block Heater (110V)	$ 120.04
	Counterweights 170lbs (1 on each side)	$ 240.08
	Counterweights 340lbs (2 on each side)	$ 413.48
	Dual Beam Work Lights	$ 120.04
	Radio	$ 404.59
	Strobe Beacon	$ 235.64
	Zero-Drift Hydraulic Valve	$ 208.96
	Battery Disconnect	$ 35.57
	Foot Throttle (Must Have Selectable EH Joystick Controls)	$ 142.27
	Synthetic Hydraulic Oil (Recommended for Cold Start Applications)	$ 97.81
	Rear Light Guarding Kit	$ 222.30
	Fire Extinguisher Kit	$ 195.62
	Hazard Lights Kit (Strobe + 4 Way Flashers)	$ 724.70
	Single Point Lift Kit	$ 1,934.01
	Rear Receiver	$ 288.99
	Level II FOPS Kit	$ 2,400.84
	Locking Fuel Cap Kit	$ 146.72
	Rearview Mirror Kit	$ 231.19
	Auxiliary Lighting Kit	$ 680.24
	LED Flood Light	$ 342.34
4.2	**Bucket Options:** Use this section to offer bucket options such as standard, snow or combination buckets, etc..	
	66" 1.1 Cubic Yard Specialty Light Material Bucket	1885.1
	66" Bolt on Cutting Edge (Light Material Bucket)	435.71
	68" .74 Cubic Yard High Capacity Bucket	1329.35
	68" 0.47 Cubic Yard Low Profile Bucket	1124.84
	68" 0.62 Cubic Yard Long Floor Low Profile Bucket	1222.65
	68" Bolt on Cutting Edge	351.23
	68" Bolt on Spill Guard (High Capacity Bucket)	213.41
	75" 0.59 Cubic Yard Low Profile Bucket	1311.57
	75" 0.71 Cubic Yard Long Floor Low Profile Bucket	1396.04
	75" Bolt on cutting Edge	346.79
	84" 1.5 Cubic Yard Snow Bucket	1685.03
	96" 1.7 Cubic Yard Snow Bucket	1845.09
	Bolt on Side Cutters (Sold in Pairs)	71.14
	Replacement Bolt On Tooth Assembly (Individual Tooth)	40.01
4.3	**Overtire tracks:** Use this section to offer overtire tracks.	

SKID / COMPACT TRACK LOADER
OPTIONS - FIXED PRICING
SPECIFICATION 4.0

Spec #	Description	Price
4.4	**Forks:**	
	Use this section to offer fork options, such as pallet forks, bale handler, etc..	
	42" Pallet Forks (45" wide, 2" Drop, 5500 LBS)	1058.15
	42" Pallet Forks (45" wide, 2" Drop, 6000 LBS)	1311.57
	48" Pallet Forks (45" wide, 2" Drop, 5500 LBS)	1133.73
	48" Pallet Forks (45" wide, 2" Drop, 6000 LBS)	1498.3
4.5	**Adaptor Plate:**	
	Use this section to offer adaptor plate options.	
4.6	**Snowblower:**	
	Use this section to offer snowblower options.	
4.7	**Sweeper:**	
	Use this section to offer sweeper options.	
4.8	**Backhoe:**	
	Use this section to offer backhoe options.	
4.9	**Planer:**	
	Use this section to offer planer options.	
4.10	**Snow Plow:**	
	Use this section to offer snow plow options.	
	72" Hydrualic Snow Angle Blade (Includes Hose Kit)	3023.28
	72" Low Profile Snow Push	2636.48
	84" Hydraulic Snow Angle Blade (Hose Kit Included)	3143.32
	84" Hydraulic Snow V Blade, with Trip Edge (Hose Kit Included) (Hydraulic Sequencing Control (No Control	4926.17
	84" Low Profile Snow Push	2720.95
	96" Hydraulic Snow V Blade, With Trip Edge (Hose Kit Included) (Hydraulic Sequencing Control (No Contro	5055.1
	96" Low Profile Snow Push	3009.94
	120" Low Profile Snow Push	3370.07
4.11	**Hydraulic breaker:**	
	Use this section to offer hydraulic breaker options.	
4.12	**Grapple:**	
	Use this section to offer grapple options.	
4.13	**Landscape:**	
	Use this section to offer landscape options.	
4.14	**Grader:**	
	Use this section to offer grader options.	
4.15	**Auger:**	
	Use this section to offer auger options.	

SKID / COMPACT TRACK LOADER
OPTIONS - FIXED PRICING
SPECIFICATION 4.0

Spec #	Description	Price
4.16	**Wheel saw:** Use this section to offer wheel saw options.	
4.17	**Vibratory roller:** Use this section to offer vibratory roller options.	
4.18	**Other:** Use this section to offer any other option not already covered.	
4.19	**EXTENDED WARRANTY OPTIONS** Use this section to offer performance/warranty options, number these items starting with 20.1, 20.2, 20.3, etc. **(Specify years, miles or hours extended term covers.)**	
4.20	**NEW EQUIPMENT RENTAL PROGRAM** If rental programs are available on the new equipment offered, with the option to purchase, list the hourly/weekly/monthly rental rate. Indicate the percent of rental fee paid by the purchaser that will be applied to the purchase price. See Solicitation Special Terms & Conditions.	
	Hourly Rental Rate:	$
	Weekly Rental Rate:	$
	Monthly Rental Rate:	$
	Percent (%) of Rental Fee applied to purchase price:	%
	If the new rental equipment is purchased and finance Charges are applicable for the actual rental term only. State the actual interest rate here: _____	
4.21	**VENDOR OWNED RENTAL RETURN OR DEMO EQUIPMENT PROGRAM** (See Solicitation Special Terms and Conditions.)	
	DEDUCT cost per Used Hour from the original Contract Price	$
4.22	**DELIVERY STARTING POINT - City, State, Zip**	Hibbing, MN 55746
	(See Special Terms and Conditions - no flat rate allowed.) **Price Per Loaded Mile:**	$4 ($250 minimum)
4.23	**INSTALLATION - PER HOUR (Hourly Shop Rate):** Installation services may be requested on an "as needed" basis - see special terms and conditions.)	$95.00
4.24	**PRICE FOR ADDITIONAL MANUALS** (1 of each included at no cost, per specs)	
	ADDITIONAL SERVICE MANUAL	
	Digital	$20.00
	Paper	$85.00
	ADDITIONAL PARTS MANUAL	
	Digital	$15.00
	Paper	$155.00
	PRICE FOR ADDITIONAL OPERATIONS MANUAL	
	Digital	$20.00
	Paper	$85.00
4.25	**DISCOUNT OFF LIST PRICE FOR RELATED PARTS & ACCESSORIES** (See Special Terms and Conditions)	%

T-631
Tractors: Skid Steers Attachments
727-1019

Skid Steer / Compact Track Loaders

FIXED PRICING
(BASE UNIT INFORMATION)
Specification 3.0

October, 2019

Vendor Name:	**L&L Rentals Inc.**
Contact Person:	**Kyle Lind/ Cliff Lind**
Street Address:	**11461 Spudville Road**
P.O. Box:	
City, State, Zip	**Hibbing, MN 55746**
Phone #:	**(218)262-5232**
Toll Free #:	
Email Address:	kyle@landlrentalsinc.com
Website:	https://www.landlrentalsinc.com

Spec #	Information Requested	Answer
3.1	**MAKE AND MODEL**	Wacker Neuson SW24 (Radial Lift)
	Engine Type and SAE net HP	Kohler KDI3404 w/DOC 74 HP
	Tier	Tier 4 Final
	Length w/o attachments	117.5 in
	Height with operator cab	83.2 in
	Ground clearance	9 in
	Maximum height to bucket hinge pin	126.8 in
	Breakout force	6941 lbf
	Reach at maximum height	29.7 in
	Dump angle at maximum height	44 degrees
	Dump height with standard bucket	99.8 in
	Front clearance circle with standard bucket	88.6 in
	Rear clearance circle	71.3 in
	Tipping load - SAE rated	4800 lbs
	Rated operating capacity - SAE	2400 lbs
	Standard bucket capacity - SAE heaped rating	.57 CYD
	Operating weight - SAE rated	7840 lbs
	Travel speed	7.2 mph (One Speed)/ 12 mph (Two Speed)
	Fuel tank capacity	40 US gal
	Cold weather starting assist	Glow Plugs
	Battery CCA	950 cca
	Alternator size - amps	120A
	Transmission type	Hydrostatic
	Tire / Track size / width	Construction Tread 12x16.5, 72 in
	Final drive chains and drive method	
	Final drive chain adjustment / maintenance	500 hours
	Gauges / instrumentation	Gauges- Fuel Level, Engine Coolant Temp., Engine Oil Pressure, Hour Meter, Hydraulic Oil Temperature, Engine Speed, Hour to Next Maintenance Indicators- Engine Oil Pressure Fault, Coolant Over-Temp, Low Battery Charge, Hydraulic Oil Filter Restriction, Hydraulic Over Temperature, Air Filter Restriction
	Pump type - GPM and PSI	22.1 gpm/ 3480 PSI
	Control valves	
	Hydraulic oil cooler	Included air to oil
	Drive controls	Mechanical Hand-Foot Controls
	Lift and tilt controls	Mechanical Hand-Foot Controls
	Engine speed control	Mechanical Hand Controls
	Work lights - front	Included 2 Single Beam working lights
	Work lights - rear	Included 2 single beam working lights
	Warranty	3 year 3000 hour full/ 4 year 4000 hour powertrain/ 5 year 5000 hour electrical system
	BASE UNIT PRICE:	$45,725.02

SKID / COMPACT TRACK LOADER
OPTIONS - FIXED PRICING
SPECIFICATION 4.0

Spec #	Description		Price
	Price for base unit:	$	45,725.02
4.1	**Skid/Compact Track Loader Options:** Use this section to offer additional skid/track loader options such as hand controls, gauges, heater, enclosed cab etc.. These options should be for skid steer power unit and not attachments.		
	Enclosed ROPS/FOPS Level 1 Cab w/ HVAC	Std	
	2 Front Single Beam Working Lights	Std	
	2 Rear Working Lights	Std	
	Hydraulic Coupler	Std	
	Hydraulic Bucket Leveling	Std	
	Dual Armrest	Std	
	Ride Control	Std	
	Polycarbonate Door	$	1,978.47
	Selectable EH Joystick Controls (ISO/H-Pattern) (Includes 5.7" Color Display)	$	2,338.60
	EH Hand-Foot Controls (Joysticks+Foot Pedals) (Includes 5.7" Color Display)	$	2,338.60
	12x16.5 Severe Duty Tires (In Place of Standard Tires)	$	586.87
	12x16.5 Solid Tires (In Place of Standard Tires)	$	2,196.32
	12x16.5 Premium Tires (In Place of Standard Tires)	$	235.64
	Diamond Coating	$	3,018.83
	Counterweights 510lbs (3 on each side)	$	617.99
	Counterweights 340lbs (2 on each side)	$	413.48
	Counterweights 170lbs (1 on each side)	$	240.08
	Air-Ride Seat	$	373.46
	Heated Air-Ride Seat	$	520.18
	3" Seat Belt	$	142.27
	Foot Throttle (For Selectable EH Joystick Control Machines Only)	$	142.27
	5.7" Color Display	$	751.37
	Back-Up Camera (Requires 5.7" Color Display)	$	751.37
	Radio	$	404.59
	Dual Beam Work Lights	$	120.04
	Strobe Beacon	$	235.64
	Hazard Light Package (Strobe Beacon + 4-Way Flashers)	$	480.17
	High Flow (31.7 gpm) (Not available with Mechanical H-F controls)	$	844.74
	Zero-Drift Hydraulic Valve	$	208.96
	14-Pin Attachment Control	$	400.14
	Block Heater (110V)	$	120.04
	Cyclonic Engine Pre-Cleaner	$	257.87
	Exhaust Scavenging Pre-Cleaner	$	302.33
	Dual Battery (Includes Disconnect)	$	280.10
	Battery Disconnect	$	35.57
	Synthetic Hydraulic Oil (Recommended for Cold Start Applications)	$	133.38
	Rear Light Guarding Kit	$	222.30
	Fire Extinguisher Kit	$	195.62
	Rearview Mirror Kit	$	231.19
	Rear Receiver	$	288.99
	Locking Fuel Cap Kit	$	146.72
	Level II FOPS Kit	$	2,400.84
4.2	**Bucket Options:** Use this section to offer bucket options such as standard, snow or combination buckets, etc..		
	36" Tree Scoop Bucket		826.96
	42" Tree Scoop Bucket		933.66
	48" Tree Scoop Bucket		1142.62
	66" Rock Bucket (2" Tine Spacing-22 Tines)		2054.05
	66" Rock Bucket (3" Tine Spacing-16 Tines)		1858.43
	72" 0.57 Cubic Yard Low Profie Bucket, Pre-Drilled for BOE		1155.96
	72" 0.57 Cubic Yard Low Profie Bucket, with Teeth		1427.17
	72" 0.71 Cubic Yard Long Floor Low Profile Bucket, Pre-Drilled for BOE		1276
	72" 0.71 Cubic Yard Long Floor Low Profile Bucket, With Teeth		1484.96
	72" 4-In-1 Multi-Purpose Construction Bucket, Pre-Drilledfor BOE (Hose Kit Included)		4090.32
	72" 4-In-1 Multi-Purpose Construction Bucket, with Teeth (Hose Kit Included)		4170.35
	74" Bolt on Cutting Edge (For Fertilizer/Slurry Bucket)		471.28
	74" Fertilizer/Slurry Bucket w/ BOE (1.45 Cubic Yard)		2854.33
	75" 0.59 Cubic Yard Low Profile Bucket, Pre-Drilled for BOE		1324.91
	75" 0.59 Cubic Yard Low Profile Bucket, With Teeth		1596.11
	75" 0.74 Cubic Yard Long Floor Low Profile Bucket, Pre-Drilled for BOE		1422.72
	75" 0.74 Cubic Yard Long Floor Low Profile Bucket, With Teeth		1627.24
	75" 0.78 Cubic Yard High-Capacity Bucket, Pre-Drilled for BOE		1418.27
	75" 0.78 Cubic Yard High-Capacity Bucket, With Teeth		1591.67
	75" Rock Bucket (2" Tine Spacing- 24 tines)		2134.08
	75" Rock Bucket (3" Tine Spacing-18 Tines)		2022.93
	75" Tooth Bar (Fits over BOE)		755.82
	78" 0.62 Cubic Yard Low Profile Bucket, Pre-Drilled for BOE		1493.86
	78" 0.62 Cubic Yard Low Profile Bucket, With Teeth		1605.01
	78" 0.77 Cubic Yard Long Floor Low Profile Bucket, Pre-Drilled for BOE		1560.55
	78" 0.77 Cubic Yard Long Floor Low Profile Bucket, With Teeth		1729.49
	78" 4-In-1 Multi-Purpose Construction Bucket, Pre-Drilled for BOE (Hose Kit Included)		4205.92
	78" 4-In-1 Multi-Purpose Construction Bucket, with Teeth (Hose Kit Included)		4468.23
	78" Bolt On Cutting Edge		377.91
	78" Bolt On Spill Guard (Compatible with 78" 4-In-1 Multipurpose Buckets Only)		168.95
	78" Tooth Bar (Fits over BOE)		915.88
	80" 0.64 Cubic Yard Low Profile Bucket, Pre-Drilled for BOE		1524.98
	80" 0.64 CUbic Yard Low Profile Bucket, With Teeth		1658.36
	80" 0.79 Cubic Yard Long Floor Low Profile Bucket, Pre-Drilled for BOE		1613.9
	80" 0.79 Cubic Yard Long Floor Low Profile Bucket, With Teeth		1778.4
	80" Bolt On Cutting Edge		377.91
	80" Tooth Bar (Fits over BOE)		813.62
	82" 0.65 Cubic Yard Low Profile Bucket, Pre-Drilled for BOE		1556.1
	82" 0.65 Cubic Yard Low Profile Bucket, With Teeth		1707.26
	82" 0.81 Cubic Yard Long Floor Low Profile Bucket, Pre-Drilled for BOE		1649.47
	82" 0.81 Cubic Yard Long Floor Low Profile Bucket, With Teeth		1800.63
	82" Bolt On Cutting Edge		457.94
	82" Tooth Bar (Fits over BOE)		915.88
	84" 1.62 Cubic Yard High-Capacity Light Material Bucket, Pre-Drilled for BOE		2080.73
	84" 4-In-1 Multi-Purpose Construction Bucket, Pre-Drilled for BOE (Hose Kit Included)		4352.63
	84" 4-In-1 Multi-Purpose Construction Bucket, with Teeth (Hose Kit Included)		4592.72
	84" Bolt On Cutting Edge		453.49
	84" Bolt on Spill Guard (Compatible with 84" 4-in-1 Multipurpose Buckets Only)		177.84
	84" Rock Bucket (3" Tine Spacing- 20 Tines)		2138.53
	84" Snow Bucket (1.5 Cubic Yard)		1685.03
	84" Tooth Bar (Fits over BOE)		906.98
	96" Bolt On Cutting Edge		457.94
	96" Snow Bucket (1.7 Cubic Yard)		1845.09

SKID / COMPACT TRACK LOADER
OPTIONS - FIXED PRICING
SPECIFICATION 4.0

Spec #	Description	Price
4.3	**Overtire tracks:**	
	Use this section to offer overtire tracks.	
4.4	**Forks:**	
	Use this section to offer fork options, such as pallet forks, bale handler, etc..	
	42" Pallet Forks (5500 LB)	1058.15
	42" Pallet Forks (6000 LB)	1311.57
	48" Pallet Forks (5500 LB)	1133.73
	48" Pallet Forks (6000 LB)	1498.3
	60" Pallet Forks (6200 LB)	1805.08
	72" Pallet Forks (6200 LB)	2120.74
4.5	**Adaptor Plate:**	
	Use this section to offer adaptor plate options.	
4.6	**Snowblower:**	
	Use this section to offer snowblower options.	
4.7	**Sweeper:**	
	Use this section to offer sweeper options.	
4.8	**Backhoe:**	
	Use this section to offer backhoe options.	
4.9	**Planer:**	
	Use this section to offer planer options.	
4.10	**Snow Plow:**	
	Use this section to offer snow plow options.	
	72" Hydraulic Snow Angle Blade (Hose Kit Included)	3023.28
	72" Low Profile Snow Push	2636.48
	84" Hydraulic Snow Angle Blade (Hose Kit Included)	3143.32
	84" Hydraulic Snow V Blade, with Trip Edge (Hose Kit Included) (Hydraulic Sequencing Control (No Contr	4926.17
	84" Low Profile Snow Push	2720.95
	96" Hydraulic Snow V Blade, with Trip Edge (Hose Kit Included) (Hydraulic Sequencing Control (No Contr	5055.1
	96" Low Profile Snow Push	3009.94
	108" Hydraulic Snow V Blade, with Trip Edge (Hose Kit Included) (Hydraulic Sequencing Control (No Con	5175.14
	120" Low Profile Snow Push	3370.07
4.11	**Hydraulic breaker:**	
	Use this section to offer hydraulic breaker options.	
4.12	**Grapple:**	
	Use this section to offer grapple options.	
4.13	**Landscape:**	
	Use this section to offer landscape options.	
4.14	**Grader:**	
	Use this section to offer grader options.	
4.15	**Auger:**	
	Use this section to offer auger options.	

SKID / COMPACT TRACK LOADER
OPTIONS - FIXED PRICING
SPECIFICATION 4.0

Spec #	Description	Price
4.16	**Wheel saw:** Use this section to offer wheel saw options.	
4.17	**Vibratory roller:** Use this section to offer vibratory roller options.	
4.18	**Other:** Use this section to offer any other option not already covered.	
4.19	**EXTENDED WARRANTY OPTIONS** Use this section to offer performance/warranty options, number these items starting with 20.1, 20.2, 20.3, etc. **(Specify years, miles or hours extended term covers.)**	
4.20	**NEW EQUIPMENT RENTAL PROGRAM** If rental programs are available on the new equipment offered, with the option to purchase, list the hourly/weekly/monthly rental rate. Indicate the percent of rental fee paid by the purchaser that will be applied to the purchase price. See Solicitation Special Terms & Conditions.	
	Hourly Rental Rate:	$
	Weekly Rental Rate:	$
	Monthly Rental Rate:	$
	Percent (%) of Rental Fee applied to purchase price:	%
	If the new rental equipment is purchased and finance Charges are applicable for the actual rental term only. State the actual interest rate here: _____	
4.21	**VENDOR OWNED RENTAL RETURN OR DEMO EQUIPMENT PROGRAM** (See Solicitation Special Terms and Conditions.) **DEDUCT** cost per Used Hour from the original Contract Price	$
4.22	**DELIVERY STARTING POINT - City, State, Zip**	Hibbing, MN 55746
	(See Special Terms and Conditions - no flat rate allowed.) **Price Per Loaded Mile:**	$4 ($250 minimum)
4.23	**INSTALLATION - PER HOUR (Hourly Shop Rate):** Installation services may be requested on an "as needed" basis - see special terms and conditions.)	$95.00
4.24	**PRICE FOR ADDITIONAL MANUALS** (1 of each included at no cost, per specs)	
	ADDITIONAL SERVICE MANUAL	
	Digital	$20.00
	Paper	$85.00
	ADDITIONAL PARTS MANUAL	
	Digital	$15.00
	Paper	$155.00
	PRICE FOR ADDITIONAL OPERATIONS MANUAL	
	Digital	$20.00
	Paper	$85.00
4.25	**DISCOUNT OFF LIST PRICE FOR RELATED PARTS & ACCESSORIES** (See Special Terms and Conditions)	%

T-631
Tractors: Skid Steers Attachments
727-1019

Skid Steer / Compact Track Loaders

FIXED PRICING
(BASE UNIT INFORMATION)
Specification 3.0

October, 2019

Vendor Name:	**L&L Rentals Inc.**
Contact Person:	**Kyle Lind/ Cliff Lind**
Street Address:	**11461 Spudville Road**
P.O. Box:	
City, State, Zip	**Hibbing, MN 55746**
Phone #:	**(218)262-5232**
Toll Free #:	
Email Address:	kyle@landlrentalsinc.com
Website:	https://www.landlrentalsinc.com

Spec #	Information Requested	Answer
3.1	**MAKE AND MODEL**	Wacker Neuson SW28 (Vertical Lift)
	Engine Type and SAE net HP	Kohler KDI3404 w/DOC 74 HP
	Tier	Tier 4 Final
	Length w/o attachments	117.5
	Height with operator cab	83.2 in
	Ground clearance	9 in
	Maximum height to bucket hinge pin	134.8 in
	Breakout force	6941 lbs
	Reach at maximum height	37.4 in
	Dump angle at maximum height	44 degrees
	Dump height with standard bucket	107.8 in
	Front clearance circle with standard bucket	88.6 in
	Rear clearance circle	71.3 in
	Tipping load - SAE rated	5600 lbs
	Rated operating capacity - SAE	2800 lbs
	Standard bucket capacity - SAE heaped rating	.57 CYD
	Operating weight - SAE rated	8175 lbs
	Travel speed	7.2 mph (One Speed)/ 12 mph (Two Speed)
	Fuel tank capacity	40 US gal
	Cold weather starting assist	Glow Plugs
	Battery CCA	950 cca
	Alternator size - amps	120A
	Transmission type	Hydrostatic
	Tire / Track size / width	12x6.5 Construction Tread Standard Tires 72.0 in
	Final drive chains and drive method	
	Final drive chain adjustment / maintenance	500 hours
	Gauges / instrumentation	Gauges- Fuel Level, Engine Coolant Temp., Engine Oil Pressure, Hour Meter, Hydraulic Oil Temperature, Engine Speed, Hours to Next Maintenance Indicators- Engine Oil Pressure Fault, Coolant Over-Temp, Low Battery Charge, Hydraulic Oil Filter Restriction, Hydraulic Over Temperature, Air Filter Restriction
	Pump type - GPM and PSI	22.1 gpm/ 3480 PSI
	Control valves	
	Hydraulic oil cooler	Included air to oil
	Drive controls	Mechanical Hand-Foot Controls
	Lift and tilt controls	Mechanical Hand-Foot Controls
	Engine speed control	Mechanical Hand Controls
	Work lights - front	Included 2 single beam working lights
	Work lights - rear	Included 2 single beam working lights
	Warranty	3 year 3000 hour full/ 4 year 4000 hour powertrain/ 5 year 5000 hour electrical system
	BASE UNIT PRICE:	$47,982.22

SKID / COMPACT TRACK LOADER
OPTIONS - FIXED PRICING
SPECIFICATION 4.0

Spec #	Description		Price
	Price for base unit:	$	47,982.22
4.1	**Skid/Compact Track Loader Options:** Use this section to offer additional skid/track loader options such as hand controls, gauges, heater, enclosed cab etc.. These options should be for skid steer power unit and not attachments.		
	ROPS/FOPS Level 1 Cab w/ HVAC	Std	
	Mechanical Suspension Operator Seat	Std	
	2 Front Single Beam Working Lights	Std	
	2 Rear Working Lights	Std	
	Two-Speed Drive	Std	
	Variable Speed Cooling Fan	Std	
	Hydraulic Coupler	Std	
	Hydraulic Bucket Leveling	Std	
	Dual Armrest	Std	
	Ride Control	Std	
	Polycarbonate Door	$	1,978.47
	Selectable EH Joystick Controls (ISO/H-Pattern) (Includes 5.7" Color Display)	$	2,338.60
	EH Hand-Foot Controls (Joysticks + Foot Pedals) (Includes 5.7" Color Display)	$	2,338.60
	12x16.5 Severe Duty Tires (In Place of Standard Tires)	$	586.87
	12x16.5 Solid Tires (In Place of Standard Tires)	$	2,196.32
	12x16.5 Premium Tires (In Place of Standard Tires)	$	235.64
	Diamond Coating	$	3,018.83
	Counterweights 510lbs (3 on Each Side)	$	617.99
	Counterweights 340lbs (2 on Each Side)	$	413.48
	Counterweights 170lbs (1 on Each Side)	$	240.08
	Air-Ride Seat	$	373.46
	Heated Air-Ride Seat	$	520.18
	3" Seat Belt	$	142.27
	Foot Throttle (For Selectable EH Joystick Control Machines Only)	$	142.27
	5.7" Color Display	$	751.37
	Back-Up Camera (Requires 5.7" Color Display)	$	751.37
	Radio	$	404.59
	Dual Beam Work Lights	$	120.04
	Strobe Beacon	$	235.64
	Hazard Light Package (Strobe Beacon + 4 Way Flashers)	$	480.17
	High Flow (31.7 GPM) (Not available on machines with Mechanical H-F Controls)	$	844.74
	Zero-Drift Hydraulic Valve	$	208.96
	14-Pin Attachment Control	$	400.14
	Block Heater (110V)	$	120.04
	Cyclonic Engine Pre-Cleaner	$	257.87
	Exhaust Scavenging Pre-Cleaner	$	302.33
	Dual Battery (Includes Disconnect)	$	280.10
	Battery Disconnect	$	35.57
	Synthetic Hydraulic Oil (Recommended for Cold Start Applications)	$	133.38
	Rear Lighting Guarding Kit	$	222.30
	Fire Extinguisher Kit	$	195.62
	Rearview Mirror Kit	$	231.19
	Auxiliary LED Lighting Kit	$	680.24
	Rear Receiver	$	288.99
	Locking Fuel Cap Kit	$	146.72
	Level II FOPS Kit	$	2,400.84
4.2	**Bucket Options:** Use this section to offer bucket options such as standard, snow or combination buckets, etc..		
	36" Tree Scoop Bucket		826.96
	42" Tree Scoop Bucket		933.66
	48" Tree Scoop Bucket		1142.62
	66" Rock Bucket (2" Tine Spacing-22 Tines)		2054.05
	66" Rock Bucket (3" Tine Spacing-16 Tines)		1858.43
	72" 0.57 Cubic Yard Low Profie Bucket, Pre-Drilled for BOE		1155.96
	72" 0.57 Cubic Yard Low Profie Bucket, with Teeth		1427.17
	72" 0.71 Cubic Yard Long Floor Low Profile Bucket, Pre-Drilled for BOE		1276
	72" 0.71 Cubic Yard Long Floor Low Profile Bucket, With Teeth		1484.96
	72" 4-In-1 Multi-Purpose Construction Bucket, Pre-Drilledfor BOE (Hose Kit Included)		4090.32
	72" 4-In-1 Multi-Purpose Construction Bucket, with Teeth (Hose Kit Included)		4170.35
	74" Bolt on Cutting Edge (For Fertilizer/Slurry Bucket)		471.28
	74" Fertilizer/Slurry Bucket w/ BOE (1.45 Cubic Yard)		2854.33
	75" 0.59 Cubic Yard Low Profile Bucket, Pre-Drilled for BOE		1324.91
	75" 0.59 Cubic Yard Low Profile Bucket, With Teeth		1596.11
	75" 0.74 Cubic Yard Long Floor Low Profile Bucket, Pre-Drilled for BOE		1422.72
	75" 0.74 Cubic Yard Long Floor Low Profile Bucket, With Teeth		1627.24
	75" 0.78 Cubic Yard High-Capacity Bucket, Pre-Drilled for BOE		1418.27
	75" 0.78 Cubic Yard High-Capacity Bucket, With Teeth		1591.67
	75" Rock Bucket (2" Tine Spacing- 24 tines)		2134.08
	75" Rock Bucket (3" Tine Spacing-18 Tines)		2022.93
	75" Tooth Bar (Fits over BOE)		755.82
	78" 0.62 Cubic Yard Low Profile Bucket, Pre-Drilled for BOE		1493.86
	78" 0.62 Cubic Yard Low Profile Bucket, With Teeth		1605.01
	78" 0.77 Cubic Yard Long Floor Low Profile Bucket, Pre-Drilled for BOE		1560.55
	78" 0.77 Cubic Yard Long Floor Low Profile Bucket, With Teeth		1729.49
	78" 4-In-1 Multi-Purpose Construction Bucket, Pre-Drilled for BOE (Hose Kit Included)		4205.92
	78" 4-In-1 Multi-Purpose Construction Bucket, with Teeth (Hose Kit Included)		4468.23
	78" Bolt On Cutting Edge		377.91
	78" Bolt On Spill Guard (Compatible with 78" 4-In-1 Multipurpose Buckets Only)		168.95
	78" Tooth Bar (Fits over BOE)		915.88
	80" 0.64 Cubic Yard Low Profile Bucket, Pre-Drilled for BOE		1524.98
	80" 0.64 CUbic Yard Low Profile Bucket, With Teeth		1658.36
	80" 0.79 Cubic Yard Long Floor Low Profile Bucket, Pre-Drilled for BOE		1613.9
	80" 0.79 Cubic Yard Long Floor Low Profile Bucket, With Teeth		1778.4
	80" 0.91 Cubic Yard High-Capacity Bucket, Pre-Drilled for BOE		1742.83
	80" 0.91 Cubic Yard High-Capacity Bucket, With Teeth		1996.25
	80" Bolt On Cutting Edge		377.91
	80" Tooth Bar (Fits over BOE)		813.62
	82" 0.65 Cubic Yard Low Profile Bucket, Pre-Drilled for BOE		1556.1
	82" 0.65 Cubic Yard Low Profile Bucket, With Teeth		1707.26
	82" 0.81 Cubic Yard Long Floor Low Profile Bucket, Pre-Drilled for BOE		1649.47
	82" 0.81 Cubic Yard Long Floor Low Profile Bucket, With Teeth		1800.63
	82" Bolt On Cutting Edge		457.94
	82" Tooth Bar (Fits over BOE)		915.88
	84" 1.62 Cubic Yard High-Capacity Light Material Bucket, Pre-Drilled for BOE		2080.73
	84" 4-In-1 Multi-Purpose Construction Bucket, Pre-Drilled for BOE (Hose Kit Included)		4352.63
	84" 4-In-1 Multi-Purpose Construction Bucket, with Teeth (Hose Kit Included)		4592.72
	84" Bolt On Cutting Edge		453.49
	84" Bolt on Spill Guard (Compatible with 84" 4-in-1 Multipurpose Buckets Only)		177.84
	84" Rock Bucket (3" Tine Spacing- 20 Tines)		2138.53
	84" Snow Bucket (1.5 Cubic Yard)		1685.03
	84" Tooth Bar (Fits over BOE)		906.98
	96" Bolt On Cutting Edge		457.94
	96" Snow Bucket (1.7 Cubic Yard)		1845.09

SKID / COMPACT TRACK LOADER
OPTIONS - FIXED PRICING
SPECIFICATION 4.0

Spec #	Description	Price
4.3	**Overtire tracks:**	
	Use this section to offer overtire tracks.	
4.4	**Forks:**	
	Use this section to offer fork options, such as pallet forks, bale handler, etc..	
	42" Pallet Forks (5500 LB)	1058.15
	42" Pallet Forks (6000 LB)	1311.57
	48" Pallet Forks (5500 LB)	1133.73
	48" Pallet Forks (6000 LB)	1498.3
	60" Pallet Forks (6200 LB)	1805.08
	72" Pallet Forks (6200 LB)	2120.74
4.5	**Adaptor Plate:**	
	Use this section to offer adaptor plate options.	
4.6	**Snowblower:**	
	Use this section to offer snowblower options.	
4.7	**Sweeper:**	
	Use this section to offer sweeper options.	
4.8	**Backhoe:**	
	Use this section to offer backhoe options.	
4.9	**Planer:**	
	Use this section to offer planer options.	
4.10	**Snow Plow:**	
	Use this section to offer snow plow options.	
	72" Hydraulic Snow Angle Blade (Hose Kit Included)	3023.28
	72" Low Profile Snow Push	2636.48
	84" Hydraulic Snow Angle Blade (Hose Kit Included)	3143.32
	84" Hydraulic Snow V Blade, with Trip Edge (Hose Kit Included) (Hydraulic Sequencing Control (No Controlle	4926.17
	84" Low Profile Snow Push	2720.95
	96" Hydraulic Snow V Blade, with Trip Edge (Hose Kit Included) (Hydraulic Sequencing Control (No Controlle	5055.1
	96" Low Profile Snow Push	3009.94
	108" Hydraulic Snow V Blade, with Trip Edge (Hose Kit Included) (Hydraulic Sequencing Control (No Controll	5175.14
	120" Low Profile Snow Push	3370.07
4.11	**Hydraulic breaker:**	
	Use this section to offer hydraulic breaker options.	
4.12	**Grapple:**	
	Use this section to offer grapple options.	
4.13	**Landscape:**	
	Use this section to offer landscape options.	
4.14	**Grader:**	
	Use this section to offer grader options.	
4.15	**Auger:**	
	Use this section to offer auger options.	

SKID / COMPACT TRACK LOADER
OPTIONS - FIXED PRICING
SPECIFICATION 4.0

Spec #	Description	Price
4.16	**Wheel saw:** Use this section to offer wheel saw options.	
4.17	**Vibratory roller:** Use this section to offer vibratory roller options.	
4.18	**Other:** Use this section to offer any other option not already covered.	
4.19	**EXTENDED WARRANTY OPTIONS** Use this section to offer performance/warranty options, number these items starting with 20.1, 20.2, 20.3, etc. **(Specify years, miles or hours extended term covers.)**	
4.20	**NEW EQUIPMENT RENTAL PROGRAM** If rental programs are available on the new equipment offered, with the option to purchase, list the hourly/weekly/monthly rental rate. Indicate the percent of rental fee paid by the purchaser that will be applied to the purchase price. See Solicitation Special Terms & Conditions.	
	Hourly Rental Rate:	$
	Weekly Rental Rate:	$
	Monthly Rental Rate:	$
	Percent (%) of Rental Fee applied to purchase price:	%
	If the new rental equipment is purchased and finance Charges are applicable for the actual rental term only. State the actual interest rate here: _____	
4.21	**VENDOR OWNED RENTAL RETURN OR DEMO EQUIPMENT PROGRAM** (See Solicitation Special Terms and Conditions.) **DEDUCT** cost per Used Hour from the original Contract Price	$
4.22	**DELIVERY STARTING POINT - City, State, Zip**	Hibbing, MN 55746
	(See Special Terms and Conditions - no flat rate allowed.) **Price Per Loaded Mile:**	$4 ($250 minimum)
4.23	**INSTALLATION - PER HOUR (Hourly Shop Rate):** Installation services may be requested on an "as needed" basis - see special terms and conditions.)	$95.00
4.24	**PRICE FOR ADDITIONAL MANUALS** (1 of each included at no cost, per specs) **ADDITIONAL SERVICE MANUAL**	
	Digital	$20.00
	Paper	$85.00
	ADDITIONAL PARTS MANUAL	
	Digital	$15.00
	Paper	$155.00
	PRICE FOR ADDITIONAL OPERATIONS MANUAL	
	Digital	$20.00
	Paper	$85.00
4.25	**DISCOUNT OFF LIST PRICE FOR RELATED PARTS & ACCESSORIES** (See Special Terms and Conditions)	%

SKID / COMPACT TRACK LOADER
DISCOUNT OFF LIST PRICING INFO
SPECIFICATION 5.0

Vendor Name:	**Titan Machinery Inc**
Contact Person:	**Andy Bethel**
Street Address:	**644 East Beaton Drive**
P.O. Box:	
City, State, Zip	**West Fargo, ND 58078**
Phone #:	**952-445-5400**
Toll Free #:	**800-795-9274**
Email Address:	andy.bethel@titanmachinery.com
Website:	www.titanmachinery.com

SPEC NUMBER	PERCENTAGE DISCOUNT PRICING	ANSWER
5.1	**MANUFACTURER**	Case Skid Steer Loader
5.2	**DATE AND ID. OF PRICE LIST**	12-Aug-19
5.3	**PERCENTAGE DISCOUNT FROM PRICE LIST**	
	Factory Supplied Attachments may incur installation charges.	
	SR160 - SR175 - SV185 - SR210	35.25%
	SR240	36.00%
	SR270	37.00%
	SV280	38.25%
	SV340	39.00%
5.4	**PRICE FOR ADDITIONAL MANUALS** (1 of each included at no cost, per specs)	
	ADDITIONAL SERVICE MANUAL	
	Digital	INC
	Paper	$ 850.00
	ADDITIONAL PARTS MANUAL	
	Digital	On-Line
	Paper	On-Line
	PRICE FOR ADDITIONAL OPERATIONS MANUAL	
	Digital	INC
	Paper	$ 105.00
5.5	**PERFORMANCE/ WARRANTY OPTIONS**	
	Use this section to offer performance/warranty options, number these items starting with 5.1, 5.2, etc. **(Specify years, miles or hours extended term covers.)**	
	SR160 - SR175 - SV185 **24 months 2,000 hrs**	
	Premier	$ 865.00
	Power Train & Hydraulics	$ 441.00
	Power Train Only	$ 274.00
	36 months 3,000 hrs	
	Premier	$ 1,818.00
	Power Train & Hydraulics	$ 921.00
	Power Train Only	$ 575.00
	48 months 4,000 hrs	
	Premier	$ 2,959.00
	Power Train & Hydraulics	$ 1,412.00
	Power Train Only	$ 952.00
	60 months 5,000 hrs	
	Premier	$ 4,353.00
	Power Train & Hydraulics	$ 2,246.00
	Power Train Only	$ 1,407.00
	SR210 - SR240 **24 months 2,000 hrs**	
	Premier	$ 1,163.00
	Power Train & Hydraulics	$ 546.00
	Power Train Only	$ 355.00
	36 months 3,000 hrs	
	Premier	$ 2,344.00
	Power Train & Hydraulics	$ 1,173.00
	Power Train Only	$ 766.00
	48 months 4,000 hrs	
	Premier	$ 3,546.00
	Power Train & Hydraulics	$ 1,856.00
	Power Train Only	$ 1,211.00
	60 months 5,000 hrs	
	Premier	$ 6,315.00
	Power Train & Hydraulics	$ 3,398.00
	Power Train Only	$ 2,098.00
	SR270 - SV280 - SV340 **24 months 2,000 hrs**	
	Premier	$ 1,368.00
	Power Train & Hydraulics	$ 643.00
	Power Train Only	$ 427.00
	36 months 3,000 hrs	
	Premier	$ 2,710.00
	Power Train & Hydraulics	$ 1,346.00
	Power Train Only	$ 888.00
	48 months 4,000 hrs	
	Premier	$ 4,173.00
	Power Train & Hydraulics	$ 2,201.00
	Power Train Only	$ 1,398.00
	60 months 5,000 hrs	
	Premier	$ 7,265.00
	Power Train & Hydraulics	$ 4,059.00
	Power Train Only	$ 2,540.00

SKID / COMPACT TRACK LOADER
DISCOUNT OFF LIST PRICING INFO
SPECIFICATION 5.0

5.6 NEW EQUIPMENT RENTAL PROGRAM

If rental programs are available on the new equipment offered, with the option to purchase, list the hourly/weekly/monthly rental rate. Indicate the percent of rental fee paid by the purchaser that will be applied to the purchase price. See Solicitation Special Terms & Conditions.

SR160 - SR175 - SV185 - SR210	Hourly Rental Rate:	N/A
	Weekly Rental Rate:	$ 699.00
	Monthly Rental Rate:	$ 1,475.00
	Percent (%) of Rental Fee applied to purchase price:	80% first 90 days
SR240 - SR270 - SV280 - SV340	Hourly Rental Rate:	N/A
	Weekly Rental Rate:	$ 789.00
	Monthly Rental Rate:	$ 1,775.00
	Percent (%) of Rental Fee applied to purchase price:	80% first 90 days

5.7 VENDOR OWNED RENTAL RETURN OR DEMO EQUIPMENT PROGRAM

See Solicitation Special Terms and Conditions.

DEDUCT cost per Used Hour from the original Contract Price: N/A

5.8 DISCOUNT OFF LIST PRICE FOR RELATED PARTS & ACCESSORIES

Case Attachments: 15%

5.9 DELIVERY STARTING POINT

DELIVERY STARTING POINT - City, State, Zip code	Nearest Titan Machinery Inc. Below
	Shakopee, MN 55379
	Fargo, ND 54108
	Crookston, MN 56716
	Hermantown, MN 55811
	Rogers, MN 55374
	Marshall, MN 56258
	Sioux Falls, SD 57104
	La Crosse, WI 54601
PRICE PER LOADED MILE	$ 4.00
MINIMUM DELIVERY CHARGE	$ 250.00

5.10 INSTALLATION - PER HOUR (Hourly Shop Rate):

(Installation services may be requested on an "as needed" basis - see special terms and conditions.) $ 132.50

SKID / COMPACT TRACK LOADER
DISCOUNT OFF LIST PRICING INFO
SPECIFICATION 5.0

Vendor Name:	**Titan Machinery Inc**
Contact Person:	**Andy Bethel**
Street Address:	**644 East Beaton Drive**
P.O. Box:	
City, State, Zip	**West Fargo, ND 58078**
Phone #:	**952-445-5400**
Toll Free #:	**800-795-9274**
Email Address:	andy.bethel@titanmachinery.com
Website:	www.titanmachinery.com

SPEC NUMBER	PERCENTAGE DISCOUNT PRICING	ANSWER
5.1	**MANUFACTURER**	Case Compact Track Loader
5.2	**DATE AND ID. OF PRICE LIST**	12-Aug-19
5.3	**PERCENTAGE DISCOUNT FROM PRICE LIST**	
	Factory Supplied Attachments may incur installation charges.	
	TR270	36.00%
	TR310	36.75%
	TR340	40.00%
	TV370	38.75%
	TV450	39.75%
5.4	**PRICE FOR ADDITIONAL MANUALS** (1 of each included at no cost, per specs)	
	ADDITIONAL SERVICE MANUAL	
	Digital	INC
	Paper	$ 950.00
	ADDITIONAL PARTS MANUAL	
	Digital	On-Line
	Paper	On-Line
	PRICE FOR ADDITIONAL OPERATIONS MANUAL	
	Digital	INC
	Paper	$ 105.00
5.5	**PERFORMANCE/ WARRANTY OPTIONS**	

Use this section to offer performance/warranty options, number these items starting with 5.1, 5.2, etc.
(Specify years, miles or hours extended term covers.)

TR270 - TR310	**24 months 2,000 hrs**		
	Premier	$	1,846.00
	Power Train & Hydraulics	$	856.00
	Power Train Only	$	571.00
	36 months 3,000 hrs		
	Premier	$	3,647.00
	Power Train & Hydraulics	$	1,685.00
	Power Train Only	$	1,124.00
	48 months 4,000 hrs		
	Premier	$	5,816.00
	Power Train & Hydraulics	$	2,626.00
	Power Train Only	$	1,750.00
	60 months 5,000 hrs		
	Premier	$	7,528.00
	Power Train & Hydraulics	$	3,482.00
	Power Train Only	$	2,808.00
TR340 - TV370	**24 months 2,000 hrs**		
	Premier	$	2,379.00
	Power Train & Hydraulics	$	1,075.00
	Power Train Only	$	716.00
	36 months 3,000 hrs		
	Premier	$	4,518.00
	Power Train & Hydraulics	$	2,085.00
	Power Train Only	$	1,387.00
	48 months 4,000 hrs		
	Premier	$	7,125.00
	Power Train & Hydraulics	$	3,290.00
	Power Train Only	$	2,193.00
	60 months 5,000 hrs		
	Premier	$	9,621.00
	Power Train & Hydraulics	$	4,448.00
	Power Train Only	$	3,610.00
TV450	**24 months 2,000 hrs**		
	Premier	$	2,098.00
	Power Train & Hydraulics	$	1,068.00
	Power Train Only	$	735.00
	36 months 3,000 hrs		
	Premier	$	4,893.00
	Power Train & Hydraulics	$	2,490.00
	Power Train Only	$	1,706.00
	48 months 4,000 hrs		
	Premier	$	7,276.00
	Power Train & Hydraulics	$	3,705.00
	Power Train Only	$	2,539.00
	60 months 5,000 hrs		
	Premier	$	10,734.00
	Power Train & Hydraulics	$	5,465.00
	Power Train Only	$	3,743.00

SKID / COMPACT TRACK LOADER
DISCOUNT OFF LIST PRICING INFO
SPECIFICATION 5.0

5.6 NEW EQUIPMENT RENTAL PROGRAM

If rental programs are available on the new equipment offered, with the option to purchase, list the hourly/weekly/monthly rental rate. Indicate the percent of rental fee paid by the purchaser that will be applied to the purchase price. See Solicitation Special Terms & Conditions.

TR270 Hourly Rental Rate:		N/A
Weekly Rental Rate:	$	1,149.00
Monthly Rental Rate:	$	3,200.00
Percent (%) of Rental Fee applied to purchase price:		80% first 90 days
TR310 - TR340 - TV380 Hourly Rental Rate:		N/A
Weekly Rental Rate:	$	1,297.00
Monthly Rental Rate:	$	3,600.00
Percent (%) of Rental Fee applied to purchase price:		80% first 90 days

5.7 VENDOR OWNED RENTAL RETURN OR DEMO EQUIPMENT PROGRAM

See Solicitation Special Terms and Conditions.

DEDUCT cost per Used Hour from the original Contract Price: N/A

5.8 DISCOUNT OFF LIST PRICE FOR RELATED PARTS & ACCESSORIES

Case Attachments: 15%

5.9 DELIVERY STARTING POINT

DELIVERY STARTING POINT - City, State, Zip code		Nearest Titan Machinery Inc. Below
		Shakopee, MN 55379
		Fargo, ND 54108
		Crookston, MN 56716
		Hermantown, MN 55811
		Rogers, MN 55374
		Marshall, MN 56258
		Sioux Falls, SD 57104
		La Crosse, WI 54601
PRICE PER LOADED MILE	$	4.00
MINIMUM DELIVERY CHARGE	$	250.00

5.10 INSTALLATION - PER HOUR (Hourly Shop Rate):

(Installation services may be requested on an "as needed" basis - see special terms and conditions.) $ 132.50

SWIFT EVENT TITLE & NUMBER: TRACTORS, SKID STEERS AND OEM ATTACHMENTS T-631(5) G0210-000010303

**** Following is a list of all distributors that are authorized to sell the contract equipment listed in the above solicitation.**

**** SWIFT Vendor Numbers: Provide the Swift Vendor Number (SWIFT ID) and Location Code (LOC CODE) for each Authorized Distributor. Each Authorized Distributor must have an accurate SWIFT ID.**

**** INSURANCE: All distributors MUST provide the required insurance certificates to the State as outline in the Swift Event Special Terms and Conditinos before any State Contract may be executed.**

COMPANY NAME	SWIFT ID	LOC CODE	COMPANY ADDRESS	ST /ZIP	PHONE	CONTACT NAME
Titan Machinery Inc.	251892	18	6340 County Road 101 E, Shakopee	MN, 55379	952-445-5400	Ben Pias
Titan Machinery Inc.	251892	6	4001 38th Street SW, Fargo	ND, 54108	701-237-3333	Lee Menge
Titan Machinery Inc.	251892	10	500 Ingersoll Ave, Crookston	MN, 56716	218-281-4668	Mike Merten
Titan Machinery Inc.	251892	19	4311 Haines Road, Hermantown	MN, 55811	218-727-3038	Ben Pias
Titan Machinery Inc.	251892	17	14375 James Road, Rogers	MN, 55374	763-428-5099	Ben Pias
Titan Machinery Inc.	251892	2	1201 North Hwy 59, Marshall	MN, 56258	507-532-5783	Lucas Hilgemann
Titan Machinery Inc.	251892	5	4400W 62nd St N. Sioux Falls	SD, 57104	605-336-3434	Matt Leighton
Titan Machinery Inc.	251892	20	N 1626 Wuensch Road, La Crosse	WI, 54601	608-788-1025	Don Benz

SR160 T4 FINAL SKID STEER LOADER US PRICE LIST

COMMERCIAL MODEL	Weight	Factory Data	List Price
SR160-T4 FINAL	5,510 LBS.		$46,035.00

SR160 T4 FINAL SKID STEER LOADER US PRICE LIST

Factory Supplied Options

Order Code			Description	Weight	Factory Data	List Price
CONTROLS AND TRANSMISSION						
SD_01401 DRIVE CONTROL TYPE						
		761040	Hand Controls **H-Pattern/Mechanical**			No Charge
		761041	Hand and Foot Controls **Hand (Loader Drive), Foot (Bucket and Boom)**			No Charge
		761042	E-H Controls **Electro-Hydraulic Switchable (ISO-H Pattern) Controls**			No Charge
SD_01100 CONTROLS LEVEL						
		761028	1 Speed Mechanical Controls			No Charge
		761030	1 Speed E-H Controls			$2,095.00
ROPS/CAB						
SD_05009 CAB						
		761043	Open Cab (No Heat or HVAC) **with top window and keyed start**			No Charge
		761220	Enclosed Cab w/HVAC Ready - G **Includes heat, side windows, front glass door with wiper, shoulder belt, radio with speakers and keyless start**			$5,028.00
		761221	Enclosed Cab w/HVAC Ready - D **Includes heat, side windows, front demo door with wiper, shoulder belt, radio with speakers and keyless start**			$6,809.00
SD_05185 CAB SEAT						
		761052	Suspension Seat (Vinyl)			No Charge
		761062	Air Ride Suspension Seat **(Fabric) with temperature control (may not be ordered with Open Cab option 761043)**			$582.00
SD_K6480 HEAVY DUTY FRONT LIGHTS						
		761201	Heavy Duty Front Lights			No Charge
COUPLER						
SD_K5101 COUPLERS						
		726003	Manual Coupler			No Charge
		726004	Hydraulic Coupler			$1,051.00
BLOCK HEATER						
SD_02086 BLOCK HEATER						
		761048	Block Heater (120V)			No Charge
OPERATOR MANUALS						
SD_32035 LANGUAGE OPTIONS						
		761085	English			No Charge
		761088	French			No Charge
		761097	Spanish			No Charge
OPTIONAL PACKAGES						
SD_01201 OPTION PACKAGES						
		761032	Standard Equipment Only			No Charge
		761033	Performance Package **Contains ON/OFF One-Way Self Leveling and Ride Control**			$1,173.00
TIRES						
SD_16068 TIRE OPTIONS						
		8501207	10x16.5 Heavy Duty (59 OTW)			No Charge
		8505607	10x16.5 TWEEL All Terrain			$3,000.00
FRONT ATTACHMENTS						
BUCKETS						
SD_K5231 BUCKETS						
		761254	72" HD Ext. w/ SmartFit Teeth **(1829 mm), 17.4 cu. ft. Heaped Capacity**			$1,692.00
		XK5231X	No Bucket			No Charge
Dirt & Foundry Bucket						
		761123	60" Dirt & Foundry Bucket **(1524 mm), 11.3 cu. ft. Heaped Capacity**			$798.00
		761124	66" Dirt & Foundry Bucket **(1676 mm), 14.8 cu. ft. Heaped Capacity**			$879.00
		761125	72" Dirt & Foundry Bucket **(1829 mm), 16.2 cu. ft. Heaped Capacity**			$1,000.00

SR160 T4 FINAL SKID STEER LOADER US PRICE LIST					
Heavy Duty Dirt Bucket					
		761141	66" Heavy Duty Dirt Bucket **(1676 mm), 13.1 cu. ft. Heaped Capacity**		$1,134.00
		761142	72" Heavy Duty Dirt Bucket **(1829 mm), 14.1 cu. ft. Heaped Capacity**		$1,409.00
Light Material Bucket					
		761135	60" Light Material Bucket **(1524 mm), 19.4 cu. ft. Heaped Capacity**		$702.00
		761136	72" Light Material Bucket **(1829 mm), 23.3 cu. ft. Heaped Capacity**		$897.00
Low Profile Buckets					
		761127	60" Low Profile Bucket **(1524 mm), 12.0 cu. ft. Heaped Capacity**		$749.00
		761128	66" Low Profile Bucket **(1676 mm), 13.4 cu. ft. Heaped Capacity**		$827.00
		761129	72" Low Profile Bucket **(1829 mm), 14.8 cu. ft. Heaped Capacity**		$903.00
Low Profile Extended Bucket					
		761130	60" Low Profile Extended **(1524 mm), 14.1 cu. ft. Heaped Capacity**		$836.00
		761131	66" Low Profile Extended **(1676 mm), 15.9 cu. ft. Heaped Capacity**		$923.00
		761132	72" Low Profile Extended **(1829 mm), 17.7 cu. ft. Heaped Capacity**		$1,004.00
SPILL GUARDS					
SD_K5400 SPILL GUARDS					
		XK5400X	No Spill Guard		No Charge
BOLT ON CUTTING EDGES					
SD_K6399 BOLT ON CUTTING EDGE					
		XK6399X	No Bolt on Cutting Edge		No Charge
		761145	60" Bolt on Cutting Edge		$197.00
		761146	66" Bolt on Cutting Edge		$217.00
		761147	72" Bolt on Cutting Edge		$241.00

SR160 T4 FINAL SKID STEER LOADER US PRICE LIST

Factory Supplied Attachments

Order Code			Description	Weight	Factory Data	List Price
Basic Attachments						
		735030006	Heavy Duty Rear Door Kit	32 LB		$308.00
		735006006	Beacon Kit	1 LB		$154.00
		735007006	4-Corner LED Strobe Kit	24 LB		$500.00
		735146006	Three Point Seat Belt	4 LB		$233.00
		735011006	Glass Front Door Kit Center mounted wiper Requires three point seat belt. Must order applicable harness. Reference dependency matrix.	182 LB		$1,543.00
		735012006	Demo Front Door Kit Center mounted wiper Requires three point seat belt. Must order applicable harness. Reference dependency matrix.	182 LB		$2,711.00
		735013006	Cab Side Windows Kit	139 LB		$865.00
		735016006	Radio Kit Must order applicable harness. Reference dependency matrix.	16 LB		$413.00
		735150006	Open Cab Interior Trim Kit For use with Open Cab. Covers interior sides and rear.	25 LB		$372.00
		735020006	Road Light Kit Must order applicable harness. Reference dependency matrix.	33 LB		$606.00
		735022006	One Way Self Level Kit	9 LB		$485.00
		735023066	Ride Control Kit	33 LB		$481.00
		735024026	Hydraulic Coupler Kit	172 LB		$1,236.00
		735037026	Single Point Lift Hook Kit Reference dependency matrix.	284 LB		$1,029.00
		735038006	FOPS Level 2 Modification Kit	61 LB		$343.00
		735039006	Extra Counterweight Kit	231 LB		$413.00
		735040086	Aspirator (Precleaner) Kit For use with Tier 4	13 LB		$317.00
		735046036	Hand Control Conversion Kit For use with Tier 4	76 LB		$824.00
		735045106	Foot Control Conversion Kit	55 LB		$753.00
		735178046	Radiator Debris Kit Only applicable on the SR130 T4B	10 LB		$333.00
		735178066	Radiator Debris Kit Only applicable on the SR160 T4B	10 LB		$333.00

SR160 T4 FINAL SKID STEER LOADER US PRICE LIST

Dirt & Foundry Bucket

		735053016	60" Dirt & Foundry Bucket (1524 mm), 11.3 cu. ft. heaped capacity	293 LB		$798.00
		735054016	66" Dirt & Foundry Bucket (1676 mm), 14.8 cu. ft. Heaped Capacity	374 LB		$879.00
		735055016	72" Dirt & Foundry Bucket (1829 mm), 16.2 cu. ft. Heaped Capacity	407 LB		$1,000.00

Low Profile Bucket

		735057016	60" Low Profile Bucket (1524 mm), 12.0 cu. ft Heaped Capacity	367 LB		$749.00
		735058016	66" Low Profile Bucket (1676 mm), 13.4 cu. ft. Heaped Capacity	431 LB		$827.00
		735059016	72" Low Profile Bucket (1829 mm), 14.8 cu. ft. Heaped Capacity	471 LB		$903.00

Low Profile Extended Bucket

		735060016	60" Low Profile Extended Bucket (1524 mm), 14.1 cu. ft. Heaped Capacity	391 LB		$836.00
		735061016	66" Low Profile Extended Bucket (1676 mm), 15.9 cu. ft. Heaped Capacity	460 LB		$923.00
		735062016	72" Low Profile Extended Bucket (1829 mm), 17.7 cu. ft. Heaped Capacity	504 LB		$1,004.00

Light Material Bucket

		735065016	60" Light Material Bucket (1524 mm), 19.4 cu. ft. Heaped Capacity	360 LB		$702.00
		735066016	72" Light Material Bucket (1829 mm), 23.3 cu. ft. Heaped Capacity	466 LB		$841.00

Manure & Slurry Bucket

		735068016	60" Manure-Slurry Bucket (1524 mm), 15.9 cu. ft. Heaped Capacity	360 LB		$660.00
		735069016	72" Manure-Slurry Bucket (1829 mm), 19.1 cu. ft. Heaped Capacity	469 LB		$856.00

Heavy Duty Dirt Bucket

		735071016	66" Heavy Duty Dirt Bucket (1676 mm), 13.1 cu. ft. Heaped Capacity	449 LB		$1,134.00
		735072016	72" Heavy Duty Dirt Bucket (1829 mm), 14.1 cu. ft. Heaped Capacity	501 LB		$1,409.00

SmartFit Teeth

		735184006	72" HDE Bucket w/ Teeth (1829 mm), 17.4 cu. ft. Heaped Capacity	624 LB		$1,692.00
		735185006	78" HDE Bucket w/ Teeth (1981 mm), 18.9 cu. ft. Heaped Capacity	697 LB		$1,898.00
		735186006	84" HDE Bucket w/ Teeth (2134 mm), 20.5 cu. ft. Heaped Capacity	728 LB		$2,032.00

Heavy Duty Tire Assembly

		735082006	RH10X16.5 HVY DUTY CA 59OTW	116 LB		$330.00
		735104006	10x16.5 Heavy Duty (59 OTW) LH Kit	116 LB		$330.00

Non-Pneumatic Tire Assembly

		735181006	KIT LH 10X16.5 TWEEL	178 LB		$750.00
		735180006	KIT RH 10X16.5 TWEEL	178 LB		$750.00

SR175 & SV185 T4 FINAL SKID STEER LOADER US PRICE LIST

COMMERCIAL MODEL	Weight	Factory Data	List Price
SR175-T4 FINAL	6,270 LBS.		$47,292.00
SV185-T4 FINAL	6,570 LBS.		$50,344.00

SR175 & SV185 T4 FINAL SKID STEER LOADER US PRICE LIST

Factory Supplied Options

Order Code			Description	Weight	Factory Data	List Price
CONTROLS AND TRANSMISSION						
SD_01401 DRIVE CONTROL TYPE						
		761040	Hand Controls **H-Pattern/Mechanical**			No Charge
		761041	Hand and Foot Controls **Hand (Loader Drive), Foot (Bucket and Boom)**			No Charge
		761042	E-H Controls **Electro-Hydraulic Switchable (ISO-H Pattern) Controls**			No Charge
SD_01100 CONTROLS LEVEL						
		761028	1 Speed Mechanical Controls			($1,307.00)
		761029	2 Speed Mechanical Controls			No Charge
		761031	2 Speed E-H Controls			$2,095.00
ROPS/CAB						
SD_05009 CAB						
		761043	Open Cab (No Heat or HVAC) **with top window and keyed start**			No Charge
		761045	Enclosed Cab with HVAC **Includes side windows, front glass door with wiper, shoulder belt, radio with speakers and keyless start**			$5,664.00
		761183	Enclosed Cab w/HVAC -Demo Door **Includes side windows, 1/2" polycarbonate front door with wiper, shoulder belt, radio with speakers and keyless start**			$7,445.00
SD_05185 CAB SEAT						
		761052	Suspension Seat (Vinyl)			No Charge
		761062	Air Ride Suspension Seat **(Fabric) with temperature control (may not be ordered with Open Cab option 761043)**			$582.00
SD_K6480 HEAVY DUTY FRONT LIGHTS						
		761201	Heavy Duty Front Lights			No Charge
REAR DOOR						
SD_39021 REAR DOOR						
		761075	Rear Door			No Charge
COUPLER						
SD_K5101 COUPLERS						
		726003	Manual Coupler			No Charge
		726004	Hydraulic Coupler			$1,051.00
BLOCK HEATER						
SD_02086 BLOCK HEATER						
		761048	Block Heater (120V)			No Charge
OPERATOR MANUALS						
SD_32035 LANGUAGE OPTIONS						
		761085	English			No Charge
		761088	French			No Charge
		761097	Spanish			No Charge
OPTIONAL PACKAGES						
SD_01201 OPTION PACKAGES						
		761034	Front Electric/Multi-Function **Contains Front Electric (Multi-Function) for Standard Auxiliaries**			No Charge
		761035	Performance w/Front Electric **Contains ON/OFF One-Way Self Leveling, Ride Control and Front Electric**			$1,173.00
		761036	High Flow Package **Contains High Flow Hydraulics with Front Electric**			$1,874.00
		761037	High Flow Plus Package **Contains Front Electric, High Flow Hydraulics, ON/OFF One-way Self Leveling and Ride Control**			$3,047.00
TIRES						
SD_16068 TIRE OPTIONS						
		8501707	10x16.5 Heavy Duty (64 OTW)			No Charge
		8503107	12x16.5 Heavy Duty (70 OTW)			$346.00
		8503207	12x16.5 Premium (70 OTW)			$506.00
		8505607	10x16.5 TWEEL All Terrain			$3,000.00

SR175 & SV185 T4 FINAL SKID STEER LOADER US PRICE LIST

FRONT ATTACHMENTS						
BUCKETS						
SD_K5231 BUCKETS						
		761254	72" HD Ext. w/ SmartFit Teeth **(1829 mm), 17.4 cu. ft. Heaped Capacity**			$1,692.00
		761255	78" HD Ext. w/ SmartFit Teeth **(1981 mm), 18.9 cu. ft. Heaped Capacity**			$1,898.00
		XK5231X	No Bucket			No Charge
Dirt & Foundry Bucket						
		761124	66" Dirt & Foundry Bucket **(1676 mm), 14.8 cu. ft. Heaped Capacity**			$879.00
		761125	72" Dirt & Foundry Bucket **(1829 mm), 16.2 cu. ft. Heaped Capacity**			$1,000.00
		761126	78" Dirt & Foundry Bucket **(1981 mm), 17.7cu. ft. Heaped Capacity**			$1,038.00
Heavy Duty Dirt Bucket						
		761141	66" Heavy Duty Dirt Bucket **(1676 mm), 13.1 cu. ft. Heaped Capacity**			$1,134.00
		761142	72" Heavy Duty Dirt Bucket **(1829 mm), 14.1 cu. ft. Heaped Capacity**			$1,409.00
		761143	78" Heavy Duty Dirt Bucket **(1981 mm), 15.5 cu. ft. Heaped Capacity**			$1,538.00
Light Material Bucket						
		761136	72" Light Material Bucket **(1829 mm), 23.3 cu. ft. Heaped Capacity**			$897.00
		761137	84" Light Material Bucket **(2134 mm), 27.5 cu. ft. Heaped Capacity**			$1,047.00
Low Profile Buckets						
		761128	66" Low Profile Bucket **(1676 mm), 13.4 cu. ft. Heaped Capacity**			$827.00
		761129	72" Low Profile Bucket **(1829 mm), 14.8 cu. ft. Heaped Capacity**			$903.00
Low Profile Extended Bucket						
		761131	66" Low Profile Extended **(1676 mm), 15.9 cu. ft. Heaped Capacity**			$923.00
		761132	72" Low Profile Extended **(1829 mm), 17.7 cu. ft. Heaped Capacity**			$1,004.00
		761133	78" Low Profile Extended **(1981 mm), 19.1 cu. ft. Heaped Capacity**			$1,086.00
		761134	84" Low Profile Extended **(2134 mm), 20.5 cu. ft. Heaped Capacity**			$1,173.00
SPILL GUARDS						
SD_K5400 SPILL GUARDS						
		XK5400X	No Spill Guard			No Charge
BOLT ON CUTTING EDGES						
SD_K6399 BOLT ON CUTTING EDGE						
		XK6399X	No Bolt on Cutting Edge			No Charge
		761146	66" Bolt on Cutting Edge			$217.00
		761147	72" Bolt on Cutting Edge			$241.00
		761148	78" Bolt on Cutting Edge			$259.00
		761149	84" Bolt on Cutting Edge			$279.00

SR175 & SV185 T4 FINAL SKID STEER LOADER US PRICE LIST

Factory Supplied Attachments

Order Code		Description	Weight	Factory Data	List Price
Basic Attachments					
	735030006	Heavy Duty Rear Door Kit	32 LB		$308.00
	735006006	Beacon Kit	1 LB		$154.00
	735007006	4-Corner LED Strobe Kit	24 LB		$500.00
	735159116	Heater Complete Kit For use with SR175 Tier 4 Final and SV185 Tier 4 Final Must order applicable harness. Reference dependency matrix.	141 LB		$1,374.00
	735158086	HVAC Complete For use with SR175 Tier 4 Must order applicable harness. Reference dependency matrix.	330 LB		$2,951.00
	735158126	HVAC Complete For use with SV185 Tier 4 Must order applicable harness. Reference dependency matrix.	330 LB		$2,951.00
	735146006	Three Point Seat Belt	4 LB		$233.00
	735011006	Glass Front Door Kit Center mounted wiper Requires three point seat belt. Must order applicable harness. Reference dependency matrix.	182 LB		$1,543.00

SR175 & SV185 T4 FINAL SKID STEER LOADER US PRICE LIST

		735012006	Demo Front Door Kit Center mounted wiper Requires three point seat belt. Must order applicable harness. Reference dependency matrix.	182 LB		$2,711.00
		735013006	Cab Side Windows Kit	139 LB		$865.00
		735016006	Radio Kit Must order applicable harness. Reference dependency matrix.	16 LB		$413.00
		735150006	Open Cab Interior Trim Kit For use with Open Cab. Covers interior sides and rear.	25 LB		$372.00
		735020056	Road Light Kit For use with SV185 Must order applicable harness. Reference dependency matrix.	18 LB		$606.00
		735020066	Road Light Kit For use with SR175 and SR200/SR210 Must order applicable harness. Reference dependency matrix.	111 LB		$606.00
		735021006	Multi-Function Front Electrical Mech Kit For use with SR175,SR200,SR210,SR220 & SR250 Must order applicable handle. Reference dependency matrix.	11 LB		$274.00
		735021016	Multi-Function Front Electrical Mech Kit For use with SV185 Tier 3 & Tier 4, SV250 Tier 3 & SV300 Tier 3 & Tier 4. Must order applicable handle. Reference dependency matrix.	11 LB		$274.00
		735125006	Multi-Function Front Electrical E-H Kit For use with SR175,SR200,SR210, SR220 & SR250 Must order applicable handle. Reference dependency matrix.	11 LB		$274.00
		735125016	Multi-Function Front Electrical E-H Kit For use with SV185, SV250 and SV300 Must order applicable handle. Reference dependency matrix.	11 LB		$274.00
		735022036	One Way Self Level Kit For use with SV185	15 LB		$485.00
		735022056	One Way Self Level Kit For use with SR175	14 LB		$485.00
		735023006	Ride Control Kit Must order applicable handle. Reference dependency martix.	33 LB		$481.00
		735024006	Hydraulic Coupler Kit For use with SR175 and SR220/SR210	50 LB		$1,236.00
		735024016	Hydraulic Coupler Kit For use with SV185, SV250 and SV300	159 LB		$1,236.00
		735025096	High Flow Auxiliary Kit For use with SR175 Tier 4 Must order applicable harness. Reference dependency matrix.	188 LB		$2,519.00
		735025086	High Flow Auxiliary Kit For use with SV185 Tier 4 Must order applicable harness. Reference dependency matrix.	193 LB		$2,519.00
		735027006	Second Hydraulic Front Auxiliary Kit For use with SV185 Connect under pressure (C.U.P.) Must order applicable handle. Reference dependency matrix.	79 LB		$1,029.00
		735027016	Second Hydraulic Front Auxiliary Kit For use with SR175 and SR200/SR210 Connect under pressure (C.U.P.) Must order applicable handle. Reference dependency matrix.	81 LB		$1,029.00
		735036016	4-Point Lift Hook Kit	11 LB		$222.00
		735037016	Single Point Lift Hook Kit For use with SR175 and SR200/SR210	284 LB		$1,029.00
		735037036	Single Point Lift Hook Kit For use with SV185	276 LB		$1,029.00
		735038006	FOPS Level 2 Modification Kit	61 LB		$343.00
		735039016	Extra Counterweight Kit	202 LB		$413.00
		735040096	Aspirator (Precleaner) Kit For use with SR175 Tier 4	12 LB		$317.00
		735040106	Aspirator (Precleaner) Kit For use with SV185 Tier 4	13 LB		$317.00
		735045046	Foot Control Conversion Kit Not available for units equipped with Electro Hydraulic (EH) controls. For use with Tier 4 and serial numbers prior to NFM418327.	52 LB		$615.00
		735046046	Hand Control Conversion Kit Not available for units equipped with Electro Hydraulic (EH) controls. For use with Tier 4 and serial numbers prior to NFM418327.	76 LB		$824.00
		735142006	Cylinder Guard Kit	21 LB		$739.00
		735163006	Heavy Duty Rear Door	140 LB		$718.00
		735178016	Radiator Debris Kit	10 LB		$333.00

Dirt & Foundry Bucket

		735054016	66" Dirt & Foundry Bucket (1676 mm), 14.8 cu. ft. Heaped Capacity	374 LB		$879.00
		735055016	72" Dirt & Foundry Bucket (1829 mm), 16.2 cu. ft. Heaped Capacity	407 LB		$1,000.00
		735056016	78" Dirt & Foundry Bucket (1981 mm), 17.7 cu. ft. Heaped Capacity	429 LB		$1,038.00

SR175 & SV185 T4 FINAL SKID STEER LOADER US PRICE LIST

Low Profile Bucket

		735058016	66" Low Profile Bucket (1676 mm), 13.4 cu. ft. Heaped Capacity	431 LB		$827.00
		735059016	72" Low Profile Bucket (1829 mm), 14.8 cu. ft. Heaped Capacity	471 LB		$903.00

Low Profile Extended Bucket

		735061016	66" Low Profile Extended Bucket (1676 mm), 15.9 cu. ft. Heaped Capacity	460 LB		$923.00
		735062016	72" Low Profile Extended Bucket (1829 mm), 17.7 cu. ft. Heaped Capacity	504 LB		$1,004.00
		735063016	78" Low Profile Extended Bucket (1981 mm), 19.1 cu. ft. Heaped Capacity	531 LB		$1,086.00
		735064016	84" Low Profile Extended Bucket (2134 mm), 20.5 cu. ft. Heaped Capacity	607 LB		$1,173.00

Light Material Bucket

		735066016	72" Light Material Bucket (1829 mm), 23.3 cu. ft. Heaped Capacity	466 LB		$841.00
		735067016	84" Light Material Bucket (2134 mm), 27.5 cu. ft. Heaped Capacity	532 LB		$981.00

Manure & Slurry Bucket

		735069016	72" Manure-Slurry Bucket (1829 mm), 19.1 cu. ft. Heaped Capacity	469 LB		$856.00
		735070016	84" Manure-Slurry Bucket (2134 mm), 22.6 cu. ft. Heaped Capacity	535 LB		$995.00

Heavy Duty Dirt Bucket

		735071016	66" Heavy Duty Dirt Bucket (1676 mm), 13.1 cu. ft. Heaped Capacity	449 LB		$1,134.00
		735072016	72" Heavy Duty Dirt Bucket (1829 mm), 14.1 cu. ft. Heaped Capacity	501 LB		$1,409.00
		735073016	78" Heavy Duty Dirt Bucket (1981 mm), 15.5 cu. ft. Heaped Capacity	526 LB		$1,538.00

SmartFit Teeth

		735184006	72" HDE Bucket w/ Teeth (1829 mm), 17.4 cu. ft. Heaped Capacity	624 LB		$1,692.00
		735185006	78" HDE Bucket w/ Teeth (1981 mm), 18.9 cu. ft. Heaped Capacity	697 LB		$1,898.00
		735186006	84" HDE Bucket w/ Teeth (2134 mm), 20.5 cu. ft. Heaped Capacity	728 LB		$2,032.00

Heavy Duty Tire Assembly

		735087006	RH10X16.5 HVY DUTY CA 64OTW	117 LB		$330.00
		735108006	10x16.5 Heavy Duty (64 OTW) LH Kit	117 LB		$330.00
		735094006	12x16.5 Heavy Duty (70 OTW) RH Kit	141 LB		$417.00
		735114006	12x16.5 Heavy Duty (70 OTW) LH Kit	141 LB		$417.00

SR175 & SV185 T4 FINAL SKID STEER LOADER US PRICE LIST

Premium Tire Assembly

		735095006	12x16.5 Premium (70 OTW) RH Kit Galaxy Beefy Baby III	152 LB		$610.00
		735115006	12x16.5 Premium (70 OTW) LH Kit Galaxy Beefy Baby III	152 LB		$610.00

Non-Pneumatic Tire Assembly

		735181006	KIT LH 10X16.5 TWEEL	178 LB		$750.00
		735180006	KIT RH 10X16.5 TWEEL	178 LB		$750.00

SR210 T4 FINAL SKID STEER LOADER US PRICE LIST

COMMERCIAL MODEL	Weight	Factory Data	List Price
SR210-T4 FINAL	6,970 LBS.		$53,541.00

SR210 T4 FINAL SKID STEER LOADER US PRICE LIST

Factory Supplied Options

Order Code			Description	Weight	Factory Data	List Price
CONTROLS AND TRANSMISSION						
SD_01401 DRIVE CONTROL TYPE						
		761040	Hand Controls **H-Pattern/Mechanical**			No Charge
		761041	Hand and Foot Controls **Hand (Loader Drive), Foot (Bucket and Boom)**			No Charge
		761042	E-H Controls **Electro-Hydraulic Switchable (ISO-H Pattern) Controls**			No Charge
SD_01100 CONTROLS LEVEL						
		761028	1 Speed Mechanical Controls			($1,307.00)
		761029	2 Speed Mechanical Controls			No Charge
		761031	2 Speed E-H Controls			$2,095.00
ROPS/CAB						
SD_05009 CAB						
		761043	Open Cab (No Heat or HVAC) **with top window and keyed start**			No Charge
		761045	Enclosed Cab with HVAC **Includes side windows, front glass door with wiper, shoulder belt, radio with speakers and keyless start**			$5,664.00
		761183	Enclosed Cab w/HVAC -Demo Door **Includes side windows, 1/2" polycarbonate front door with wiper, shoulder belt, radio with speakers and keyless start**			$7,445.00
SD_05185 CAB SEAT						
		761052	Suspension Seat (Vinyl)			No Charge
		761062	Air Ride Suspension Seat **(Fabric) with temperature control (may not be ordered with Open Cab option 761043)**			$582.00
SD_K6480 HEAVY DUTY FRONT LIGHTS						
		761201	Heavy Duty Front Lights			No Charge
REAR DOOR						
SD_39021 REAR DOOR						
		761205	Heavy Duty Rear Door			No Charge
COUPLER						
SD_K5101 COUPLERS						
		726003	Manual Coupler			No Charge
		726004	Hydraulic Coupler			$1,051.00
BLOCK HEATER						
SD_02086 BLOCK HEATER						
		761048	Block Heater (120V)			No Charge
OPERATOR MANUALS						
SD_32035 LANGUAGE OPTIONS						
		761085	English			No Charge
		761088	French			No Charge
		761097	Spanish			No Charge
OPTIONAL PACKAGES						
SD_01201 OPTION PACKAGES						
		761034	Front Electric/Multi-Function **Contains Front Electric (Multi-Function) for Standard Auxiliaries**			No Charge
		761035	Performance w/Front Electric **Contains ON/OFF One-Way Self Leveling, Ride Control and Front Electric**			$1,173.00
		761036	High Flow Package **Contains High Flow Hydraulics with Front Electric**			$1,874.00
		761037	High Flow Plus Package **Contains Front Electric, High Flow Hydraulics, ON/OFF One-way Self Leveling and Ride Control**			$3,047.00

SR210 T4 FINAL SKID STEER LOADER US PRICE LIST

TIRES

SD_16068 TIRE OPTIONS

		8501707	10x16.5 Heavy Duty (64 OTW)			No Charge
		8503107	12x16.5 Heavy Duty (70 OTW)			No Charge
		8503207	12x16.5 Premium (70 OTW)			$506.00
		8503407	12x16.5 Severe Duty (70 OTW)			$800.00
		8505607	10x16.5 TWEEL All Terrain			$3,000.00
		8505707	12x16.5 TWEEL All Terrain			$3,400.00

FRONT ATTACHMENTS

BUCKETS

SD_K5231 BUCKETS

		761254	72" HD Ext. w/ SmartFit Teeth **(1829 mm), 17.4 cu. ft. Heaped Capacity**			$1,692.00
		761255	78" HD Ext. w/ SmartFit Teeth **(1981 mm), 18.9 cu. ft. Heaped Capacity**			$1,898.00
		XK5231X	No Bucket			No Charge
Dirt & Foundry Bucket						
		761124	66" Dirt & Foundry Bucket **(1676 mm), 14.8 cu. ft. Heaped Capacity**			$879.00
		761125	72" Dirt & Foundry Bucket **(1829 mm), 16.2 cu. ft. Heaped Capacity**			$1,000.00
		761126	78" Dirt & Foundry Bucket **(1981 mm), 17.7cu. ft. Heaped Capacity**			$1,038.00
Heavy Duty Dirt Bucket						
		761141	66" Heavy Duty Dirt Bucket **(1676 mm), 13.1 cu. ft. Heaped Capacity**			$1,134.00
		761142	72" Heavy Duty Dirt Bucket **(1829 mm), 14.1 cu. ft. Heaped Capacity**			$1,409.00
		761143	78" Heavy Duty Dirt Bucket **(1981 mm), 15.5 cu. ft. Heaped Capacity**			$1,538.00
Light Material Bucket						
		761136	72" Light Material Bucket **(1829 mm), 23.3 cu. ft. Heaped Capacity**			$897.00
		761137	84" Light Material Bucket **(2134 mm), 27.5 cu. ft. Heaped Capacity**			$1,047.00
Low Profile Buckets						
		761128	66" Low Profile Bucket **(1676 mm), 13.4 cu. ft. Heaped Capacity**			$827.00
		761129	72" Low Profile Bucket **(1829 mm), 14.8 cu. ft. Heaped Capacity**			$903.00
Low Profile Extended Bucket						
		761131	66" Low Profile Extended **(1676 mm), 15.9 cu. ft. Heaped Capacity**			$923.00
		761132	72" Low Profile Extended **(1829 mm), 17.7 cu. ft. Heaped Capacity**			$1,004.00
		761133	78" Low Profile Extended **(1981 mm), 19.1 cu. ft. Heaped Capacity**			$1,086.00
		761134	84" Low Profile Extended **(2134 mm), 20.5 cu. ft. Heaped Capacity**			$1,173.00

SPILL GUARDS

SD_K5400 SPILL GUARDS

		XK5400X	No Spill Guard			No Charge

BOLT ON CUTTING EDGES

SD_K6399 BOLT ON CUTTING EDGE

		XK6399X	No Bolt on Cutting Edge			No Charge
		761146	66" Bolt on Cutting Edge			$217.00
		761147	72" Bolt on Cutting Edge			$241.00
		761148	78" Bolt on Cutting Edge			$259.00
		761149	84" Bolt on Cutting Edge			$279.00

SR210 T4 FINAL SKID STEER LOADER US PRICE LIST

Factory Supplied Attachments

Order Code			Description	Weight	Factory Data	List Price
Basic Attachments						
		735006006	Beacon Kit	1 LB		$154.00
		735007006	4-Corner LED Strobe Kit	24 LB		$500.00
		735159046	Heater Complete Kit For use with Tier 4 Must order applicable harness. Reference dependency matrix.	141 LB		$1,374.00
		735158106	HVAC Complete Kit For use with Tier 4 Must order applicable harness. Reference dependency matrix.	332 LB		$2,951.00
		735146006	Three Point Seat Belt	4 LB		$233.00
		735011006	Glass Front Door Kit Center mounted wiper Requires three point seat belt. Must order applicable harness. Reference dependency matrix.	182 LB		$1,543.00
		735012006	Demo Front Door Kit Center mounted wiper Requires three point seat belt. Must order applicable harness. Reference dependency matrix.	182 LB		$2,711.00
		735013006	Cab Side Windows Kit	139 LB		$865.00
		735016006	Radio Kit Must order applicable harness. Reference dependency matrix.	16 LB		$413.00
		735150006	Open Cab Interior Trim Kit For use with Open Cab. Covers interior sides and rear.	25 LB		$372.00
		735020066	Road Light Kit For use with SR175 and SR200/SR210 Must order applicable harness. Reference dependency matrix.	111 LB		$606.00
		735021006	Multi-Function Front Electrical Mech Kit For use with SR175,SR200,SR210,SR220 & SR250 Must order applicable handle. Reference dependency matrix.	11 LB		$274.00
		735125006	Multi-Function Front Electrical E-H Kit For use with SR175,SR200,SR210, SR220 & SR250 Must order applicable handle. Reference dependency matrix.	11 LB		$274.00
		735022046	One Way Self Level Kit	15 LB		$485.00
		735023006	Ride Control Kit Must order applicable handle. Reference dependency martix.	33 LB		$481.00
		735024006	Hydraulic Coupler Kit For use with SR175 and SR220/SR210	50 LB		$1,236.00
		735025076	High Flow Auxiliary Kit For use with Tier 4 Must order applicable harness. Reference dependency matrix.	191 LB		$2,519.00
		735027016	Second Hydraulic Front Auxiliary Kit For use with SR175 and SR200/SR210 Connect under pressure (C.U.P.) Must order applicable handle. Reference dependency matrix.	81 LB		$1,029.00
		735036016	4-Point Lift Hook Kit	11 LB		$222.00
		735037016	Single Point Lift Hook Kit For use with SR175 and SR200/SR210	284 LB		$1,029.00
		735038006	FOPS Level 2 Modification Kit	61 LB		$343.00
		735039016	Extra Counterweight Kit	202 LB		$413.00
		735040146	Aspirator (Precleaner) Kit For use with Tier 4	14 LB		$317.00
		735045046	Foot Control Conversion Kit Not available for units equipped with Electro Hydraulic (EH) controls. For use with Tier 4 and serial numbers prior to NFM418327.	52 LB		$615.00
		735046046	Hand Control Conversion Kit Not available for units equipped with Electro Hydraulic (EH) controls. For use with Tier 4 and serial numbers prior to NFM418327.	76 LB		$824.00
		735047006	120V Block Heater Kit	6 LB		$206.00
		735048006	220V Block Heater Kit	6 LB		$206.00
		735142006	Cylinder Guard Kit	21 LB		$739.00
		735163006	Heavy Duty Rear Door	140 LB		$718.00
		735163016	Heavy Duty Rear Door For use with SR210 Tier 4 Final	167 LB		$718.00
		735178026	Rediator Debris Kit	10 LB		$333.00
Dirt & Foundry Bucket						
		735054016	66" Dirt & Foundry Bucket (1676 mm), 14.8 cu. ft. Heaped Capacity	374 LB		$879.00
		735055016	72" Dirt & Foundry Bucket (1829 mm), 16.2 cu. ft. Heaped Capacity	407 LB		$1,000.00
		735056016	78" Dirt & Foundry Bucket (1981 mm), 17.7 cu. ft. Heaped Capacity	429 LB		$1,038.00

SR210 T4 FINAL SKID STEER LOADER US PRICE LIST

Low Profile Bucket

		735058016	66" Low Profile Bucket (1676 mm), 13.4 cu. ft. Heaped Capacity	431 LB		$827.00
		735059016	72" Low Profile Bucket (1829 mm), 14.8 cu. ft. Heaped Capacity	471 LB		$903.00

Low Profile Extended Bucket

		735061016	66" Low Profile Extended Bucket (1676 mm), 15.9 cu. ft. Heaped Capacity	460 LB		$923.00
		735062016	72" Low Profile Extended Bucket (1829 mm), 17.7 cu. ft. Heaped Capacity	504 LB		$1,004.00
		735063016	78" Low Profile Extended Bucket (1981 mm), 19.1 cu. ft. Heaped Capacity	531 LB		$1,086.00
		735064016	84" Low Profile Extended Bucket (2134 mm), 20.5 cu. ft. Heaped Capacity	607 LB		$1,173.00

Light Material Bucket

		735066016	72" Light Material Bucket (1829 mm), 23.3 cu. ft. Heaped Capacity	466 LB		$841.00
		735067016	84" Light Material Bucket (2134 mm), 27.5 cu. ft. Heaped Capacity	532 LB		$981.00

Manure & Slurry Bucket

		735069016	72" Manure-Slurry Bucket (1829 mm), 19.1 cu. ft. Heaped Capacity	469 LB		$856.00
		735070016	84" Manure-Slurry Bucket (2134 mm), 22.6 cu. ft. Heaped Capacity	535 LB		$995.00

Heavy Duty Dirt Bucket

		735071016	66" Heavy Duty Dirt Bucket (1676 mm), 13.1 cu. ft. Heaped Capacity	449 LB		$1,134.00
		735072016	72" Heavy Duty Dirt Bucket (1829 mm), 14.1 cu. ft. Heaped Capacity	501 LB		$1,409.00
		735073016	78" Heavy Duty Dirt Bucket (1981 mm), 15.5 cu. ft. Heaped Capacity	526 LB		$1,538.00

SmartFit Teeth

		735184006	72" HDE Bucket w/ Teeth (1829 mm), 17.4 cu. ft. Heaped Capacity	624 LB		$1,692.00
		735185006	78" HDE Bucket w/ Teeth (1981 mm), 18.9 cu. ft. Heaped Capacity	697 LB		$1,898.00
		735186006	84" HDE Bucket w/ Teeth (2134 mm), 20.5 cu. ft. Heaped Capacity	728 LB		$2,032.00

Heavy Duty Tire Assembly

		735087006	RH10X16.5 HVY DUTY CA 64OTW	117 LB		$330.00
		735108006	10x16.5 Heavy Duty (64 OTW) LH Kit	117 LB		$330.00
		735094006	12x16.5 Heavy Duty (70 OTW) RH Kit	141 LB		$417.00
		735114006	12x16.5 Heavy Duty (70 OTW) LH Kit	141 LB		$417.00

Premium Tire Assembly

		735095006	12x16.5 Premium (70 OTW) RH Kit Galaxy Beefy Baby III	152 LB		$610.00
		735115006	12x16.5 Premium (70 OTW) LH Kit Galaxy Beefy Baby III	152 LB		$610.00

Non-Pneumatic Tire Assembly

		735181006	KIT LH 10X16.5 TWEEL	178 LB		$750.00
		735180006	KIT RH 10X16.5 TWEEL	178 LB		$750.00
		735182006	KIT RH 12X16.5 TWEEL	226 LB		$850.00
		735183006	KIT LH 12X16.5 TWEEL	178 LB		$850.00

Severe Duty Tire Assembly

		735097006	12x16.5 Severe Duty (70 OTW) RH Kit	168 LB		$645.00
		735117006	12x16.5 Severe Duty (70 OTW) LH Kit	168 LB		$645.00

SR240 T4 FINAL SKID STEER LOADER US PRICE LIST

COMMERCIAL MODEL	Weight	Factory Data	List Price
SR240 T4 FINAL	7,400 LBS.		$64,267.00

SR240 T4 FINAL SKID STEER LOADER US PRICE LIST

Factory Supplied Options

Order Code			Description	Weight	Factory Data	List Price
CONTROLS AND TRANSMISSION						
SD_01401 DRIVE CONTROL TYPE						
		761041	Hand and Foot Controls **Hand (Loader Drive), Foot (Bucket and Boom)**			No Charge
		761040	Hand Controls **H-Pattern/Mechanical**			No Charge
		761042	E-H Controls **Electro-Hydraulic Switchable (ISO-H Pattern) Controls**			No Charge
SD_01100 CONTROLS LEVEL						
		761028	1 Speed Mechanical Controls			($1,307.00)
		761029	2 Speed Mechanical Controls			No Charge
		761031	2 Speed E-H Controls			$2,095.00
ROPS/CAB						
SD_05009 CAB						
		761043	Open Cab (No Heat or HVAC) **with top window and keyed start**			($5,320.00)
		761045	Enclosed Cab with HVAC **Includes side windows, front glass door with wiper, shoulder belt, radio with speakers and keyless start**			No Charge
		761183	Enclosed Cab w/HVAC -Demo Door **Includes side windows, 1/2" polycarbonate front door with wiper, shoulder belt, radio with speakers and keyless start**			$1,781.00
SD_05185 CAB SEAT						
		761052	Suspension Seat (Vinyl)			($582.00)
		761062	Air Ride Suspension Seat **(Fabric) with temperature control** **(may not be ordered with Open Cab option 761043)**			No Charge
SD_K6480 HEAVY DUTY FRONT LIGHTS						
		761201	Heavy Duty Front Lights			No Charge
REAR DOOR						
SD_39021 REAR DOOR						
		761205	Heavy Duty Rear Door			No Charge
COUPLER						
SD_K5101 COUPLERS						
		726003	Manual Coupler			($1,027.00)
		761206	Heavy Duty Hydraulic Coupler			No Charge
BLOCK HEATER						
SD_02086 BLOCK HEATER						
		761048	Block Heater (120V)			No Charge
OPERATOR MANUALS						
SD_32035 LANGUAGE OPTIONS						
		761085	English			No Charge
		761088	French			No Charge
		761097	Spanish			No Charge
OPTIONAL PACKAGES						
SD_01201 OPTION PACKAGES						
		761034	Front Electric/Multi-Function **Contains Front Electric (Multi-Function) for Standard Auxiliaries**			No Charge
		761035	Performance w/Front Electric **Contains ON/OFF One-Way Self Leveling, Ride Control and Front Electric**			$1,172.00
		761036	High Flow Package **Contains High Flow Hydraulics with Front Electric**			$1,874.00
		761037	High Flow Plus Package **Contains Front Electric, High Flow Hydraulics, ON/OFF One-Way Self Leveling and Ride Control**			$3,047.00

SR240 T4 FINAL SKID STEER LOADER US PRICE LIST

TIRES						
SD_16068 TIRE OPTIONS						
		8505707	12x16.5 TWEEL All Terrain			$3,400.00
		8503107	12x16.5 Heavy Duty (70 OTW)			No Charge
		8503207	12x16.5 Premium (70 OTW)			$506.00
		8503407	12x16.5 Severe Duty (70 OTW)			$800.00
		8503507	12x16.5 Mining (70 OTW)			$896.00
		8505407	14X17.5 SVR DTY76OTW			$1,500.00
FRONT ATTACHMENTS						
BUCKETS						
SD_K5231 BUCKETS						
		761254	72" HD Ext. w/ SmartFit Teeth **(1829 mm), 17.4 cu. ft. Heaped Capacity**			$1,692.00
		761255	78" HD Ext. w/ SmartFit Teeth **(1981 mm), 18.9 cu. ft. Heaped Capacity**			$1,898.00
		761256	84" HD Ext. w/ SmartFit Teeth **(2134 mm), 20.5 cu. ft. Heaped Capacity**			$2,032.00
		XK5231X	No Bucket			No Charge
Dirt & Foundry Bucket						
		761125	72" Dirt & Foundry Bucket **(1829 mm), 16.2 cu. ft. Heaped Capacity**			$1,000.00
		761126	78" Dirt & Foundry Bucket **(1981 mm), 17.7 cu. ft. Heaped Capacity**			$1,038.00
Heavy Duty Dirt Bucket						
		761142	72" Heavy Duty Dirt Bucket **(1829 mm), 14.1 cu. ft. Heaped Capacity**			$1,409.00
		761143	78" Heavy Duty Dirt Bucket **(1981 mm), 15.5 cu. ft. Heaped Capacity**			$1,538.00
		761144	84" Heavy Duty Dirt Bucket **(2134 mm), 17.0 cu. ft. Heaped Capacity**			$1,589.00
Light Material Bucket						
		761136	72" Light Material Bucket **(1829 mm), 23.3 cu. ft. Heaped Capacity**			$841.00
		761137	84" Light Material Bucket **(2134 mm), 27.5 cu. ft. Heaped Capacity**			$981.00
Low Profile Bucket						
		761129	72" Low Profile Bucket **(1829 mm), 14.8 cu. ft. Heaped Capacity**			$903.00
Low Profile Extended Bucket						
		761132	72" Low Profile Extended **(1829 mm), 17.7 cu. ft. Heaped Capacity**			$1,004.00
		761133	78" Low Profile Extended **(1981 mm), 19.1 cu. ft. Heaped Capacity**			$1,086.00
		761134	84" Low Profile Extended **(2134 mm), 20.5 cu. ft. Heaped Capacity**			$1,173.00
SPILL GUARDS						
SD_K5400 SPILL GUARDS						
		XK5400X	No Spill Guard			No Charge
BOLT ON CUTTING EDGES						
SD_K6399 BOLT ON CUTTING EDGE						
		XK6399X	No Bolt on Cutting Edge			No Charge
		761147	72" Bolt on Cutting Edge			$241.00
		761148	78" Bolt on Cutting Edge			$259.00
		761149	84" Bolt on Cutting Edge			$279.00

SR240 T4 FINAL SKID STEER LOADER US PRICE LIST

Factory Supplied Attachments

Order Code			Description	Weight	Factory Data	List Price
Basic Attachments						
		735030006	Heavy Duty Rear Door Kit	32 LB		$308.00
		735006006	Beacon Kit	1 LB		$154.00
		735007006	4-Corner LED Strobe Kit	24 LB		$500.00
		735159046	Heater Complete Kit For use with SR240 Tier 4 Final, SV280 Tier 4 Final Must order applicable harness. Reference dependency matrix.	141 LB		$1,374.00
		735158176	HVAC Complete For use with SR240 Tier 4 Final Must order applicable harness. Reference dependency matrix.	381 LB		$2,740.00
		735146006	Three Point Seat Belt	4 LB		$233.00
		735011006	Glass Front Door Kit Center mounted wiper Requires three point seat belt. Must order applicable harness. Reference dependency matrix.	182 LB		$1,543.00
		735012006	Demo Front Door Kit Center mounted wiper Requires three point seat belt. Must order applicable harness. Reference dependency matrix.	182 LB		$2,711.00
		735013006	Cab Side Windows Kit	139 LB		$865.00
		735016006	Radio Kit Must order applicable harness. Reference dependency matrix.	16 LB		$413.00
		735150006	Open Cab Interior Trim Kit KIT, OPEN CAB TRIM-NON-EU	25 LB		$372.00
		735021006	Multi-Function Front Electrical Mech Kit Must order applicable handle. Reference dependency matrix.	11 LB		$274.00
		735125006	Multi-Function Front Electrical E-H Kit Must order applicalbe handle. Reference dependency matrix.	11 LB		$274.00
		735022026	One Way Self Level Kit	14 LB		$485.00
		735023006	Ride Control Kit Must order applicable handle. Reference dependency martix.	33 LB		$481.00
		735024006	Hydraulic Coupler Kit Must order applicable harness. Reference dependency matrix.	50 LB		$1,236.00
		735025056	High Flow Auxiliary Kit For use with SR220 Tier 4 Interim, SR240 Tier 4 Final and SR250 Tier 4 Interim Must order applicable harness. Reference dependency matrix.	192 LB		$2,519.00
		735027066	Second Hydraulic Front Auxiliary Kit Connect under pressure (C.U.P) Must order applicable handle. Reference dependency matrix.	99 LB		$1,029.00
		735036026	4-Point Lift Hook Kit For use with SR240 T4 Final, SV280 Tier 4 Final	11 LB		$222.00
		735037006	Single Point Lift Hook Kit	289 LB		$1,029.00
		735038006	FOPS Level 2 Modification Kit	61 LB		$343.00
		735039026	Extra Counterweight Kit	362 LB		$687.00
		735040156	Aspirator (Precleaner) Kit For use with SR240 Tier 4 Final	17 LB		$317.00
		735045046	Foot Control Conversion Kit For use with Tier 4 Interim and Final. Not available for units equipped with Electro Hydraulic (EH) controls.	52 LB		$615.00
		735046046	Hand Control Conversion Kit Used for units built AFTER s/n NFM418327	76 LB		$824.00
		735046056	Hand Control Conversion Kit For use with units built PRIOR to S/N NDM461595 (SR220 Tier 4 Interim), NDM443253 (SR250 Tier 4 Interim), NDM469210 (SV250 Tier 4 Interim) and NDM460105 (SV300 Tier 4 Interim)	77 LB		$824.00
		735046076	Hand Control Conversion Kit Use with units built PRIOR to s/n NFM418327	76 LB		$750.00
		735142006	Cylinder Guard Kit	21 LB		$739.00
		735163006	Heavy Duty Rear Door For use with SR220 T4 Interim, SR240 T4 Final, SR250 T4 Interim, SV250 T4 Interim, SV280 T4 Final and SV300 T4 Interim	140 LB		$718.00
		735020066	Road Light Kit Must order applicable harness. Reference dependency matrix.	111 LB		$606.00
		735178036	Radiator Debris Kit	10 LB		$333.00
Dirt & Foundry Bucket						
		735055016	72" Dirt & Foundry Bucket (1829 mm), 16.2 cu. ft. Heaped Capacity	407 LB		$1,000.00
		735056016	78" Dirt & Foundry Bucket (1981 mm), 17.7 cu. ft. Heaped Capacity	429 LB		$1,038.00
Low Profile Bucket						
		735059016	72" Low Profile Bucket (1829 mm), 14.8 cu. ft. Heaped Capacity	471 LB		$903.00

SR240 T4 FINAL SKID STEER LOADER US PRICE LIST

Low Profile Extended Bucket

		735062016	72" Low Profile Extended Bucket (1829 mm), 17.7 cu. ft. Heaped Capacity	504 LB		$1,004.00
		735063016	78" Low Profile Extended Bucket (1981 mm), 19.1 cu. ft. Heaped Capacity	531 LB		$1,086.00
		735064016	84" Low Profile Extended Bucket (2134 mm), 20.5 cu. ft. Heaped Capacity	607 LB		$1,173.00

Light Material Bucket

		735066016	72" Light Material Bucket (1829 mm), 23.3 cu. ft. Heaped Capacity	466 LB		$841.00
		735067016	84" Light Material Bucket (2134 mm), 27.5 cu. ft. Heaped Capacity	532 LB		$981.00

Manure & Slurry Bucket

		735069016	72" Manure-Slurry Bucket (1829 mm), 19.1 cu. ft. Heaped Capacity	469 LB		$856.00
		735070016	84" Manure-Slurry Bucket (2134 mm), 22.6 cu. ft. Heaped Capacity	535 LB		$995.00

Heavy Duty Dirt Bucket

		735072016	72" Heavy Duty Dirt Bucket (1829 mm), 14.1 cu. ft. Heaped Capacity	501 LB		$1,409.00
		735073016	78" Heavy Duty Dirt Bucket (1981 mm), 15.5 cu. ft. Heaped Capacity	526 LB		$1,538.00
		735074016	84" Heavy Duty Dirt Bucket (2134 mm), 17.0 cu. ft. Heaped Capacity	550 LB		$1,589.00

SmartFit Teeth

		735184006	72" HDE Bucket w/ Teeth (1829 mm), 17.4 cu. ft. Heaped Capacity	624 LB		$1,692.00
		735185006	78" HDE Bucket w/ Teeth (1981 mm), 18.9 cu. ft. Heaped Capacity	697 LB		$1,898.00
		735186006	84" HDE Bucket w/ Teeth (2134 mm), 20.5 cu. ft. Heaped Capacity	728 LB		$2,032.00

Heavy Duty Tire Assembly

		735094006	12x16.5 Heavy Duty (70 OTW) RH Kit	141 LB		$417.00
		735114006	12x16.5 Heavy Duty (70 OTW) LH Kit	141 LB		$417.00

Premium Tire Assembly

		735095006	12x16.5 Premium (70 OTW) RH Kit Galaxy Beefy Baby III	152 LB		$610.00
		735115006	12x16.5 Premium (70 OTW) LH Kit Galaxy Beefy Baby III	152 LB		$610.00

Non-Pneumatic Tire Assembly

		735182006	KIT RH 12X16.5 TWEEL	226 LB		$850.00
		735183006	KIT LH 12X16.5 TWEEL	178 LB		$850.00

Severe Duty Tire Assembly

		735097006	12x16.5 Severe Duty (70 OTW) RH Kit	168 LB		$645.00
		735117006	12x16.5 Severe Duty (70 OTW) LH Kit	168 LB		$645.00
		735173006	RH 14X17.5 SVER DUTY76OTW	187 LB		$809.00
		735176006	LH 14X17.5 SVER DUTY76OTW	187 LB		$809.00

Mining Tire Assembly

		735098006	12x16.5 Mining (70 OTW) RH Kit	160 LB		$712.00
		735118006	12x16.5 Mining (70 OTW) LH Kit	160 LB		$712.00

SR270 T4 FINAL SKID STEER LOADER US PRICE LIST

COMMERCIAL MODEL	Weight	Factory Data	List Price
SR270 T4 FINAL.	8,117 LBS.		$75,089.00

SR270 T4 FINAL SKID STEER LOADER US PRICE LIST

Factory Supplied Options

Order Code			Description	Weight	Factory Data	List Price
CONTROLS AND TRANSMISSION						
SD_01401 DRIVE CONTROL TYPE						
		761041	Hand and Foot Controls **Hand (Loader Drive), Foot (Bucket and Boom)**			No Charge
		761040	Hand Controls **H-Pattern/Mechanical**			No Charge
		761042	E-H Controls **Electro-Hydraulic Switchable (ISO-H Pattern) Controls**			No Charge
SD_01100 CONTROLS LEVEL						
		761029	2 Speed Mechanical Controls			No Charge
		761031	2 Speed E-H Controls			$2,095.00
ROPS/CAB						
SD_05009 CAB						
		761043	Open Cab (No Heat or HVAC) **with top window and keyed start**			($5,320.00)
		761045	Enclosed Cab with HVAC **Includes side windows, front glass door with wiper, shoulder belt, radio with speakers and keyless start**			No Charge
		761183	Enclosed Cab w/HVAC -Demo Door **Includes side windows, 1/2" polycarbonate front door with wiper, shoulder belt, radio with speakers and keyless start**			$1,781.00
SD_05185 CAB SEAT						
		761052	Suspension Seat (Vinyl)			($582.00)
		761062	Air Ride Suspension Seat **(Fabric) with temperature control** **(may not be ordered with Open Cab option 761043)**			No Charge
SD_K6480 HEAVY DUTY FRONT LIGHTS						
		761201	Heavy Duty Front Lights			No Charge
COUPLER						
SD_K5101 COUPLERS						
		726003	Manual Coupler			($1,027.00)
		761206	Heavy Duty Hydraulic Coupler			No Charge
BLOCK HEATER						
SD_02086 BLOCK HEATER						
		761048	Block Heater (120V)			No Charge
OPERATOR MANUALS						
SD_32035 LANGUAGE OPTIONS						
		761085	English			No Charge
		761088	French			No Charge
		761097	Spanish			No Charge
OPTIONAL PACKAGES						
SD_01201 OPTION PACKAGES						
		761034	Front Electric/Multi-Function **Contains Front Electric (Multi-Function) for Standard Auxiliaries**			No Charge
		761035	Performance w/Front Electric **Contains ON/OFF One-Way Self Leveling, Ride Control and Front Electric**			$1,172.00
		761036	High Flow Package **Contains High Flow Hydraulics with Front Electric**			$1,874.00
		761037	High Flow Plus Package **Contains Front Electric, High Flow Hydraulics, ON/OFF One-Way Self Leveling and Ride Control**			$3,047.00
		761039	Enhanced High Flow Package **Only available with units equipped with EH Controls. Contains 4000 PSI High Flow Hydraulics, Second Auxiliaries, Front Electric, High Flow Hydraulics, ON/OFF One-way Self Leveling and Ride Control**			$6,317.00

SR270 T4 FINAL SKID STEER LOADER US PRICE LIST

TIRES						
SD_16068 TIRE OPTIONS						
		8505707	12x16.5 TWEEL All Terrain			$3,400.00
		8503107	12x16.5 Heavy Duty (70 OTW)			No Charge
		8503207	12x16.5 Premium (70 OTW)			$506.00
		8503407	12x16.5 Severe Duty (70 OTW)			$800.00
		8503507	12x16.5 Mining (70 OTW)			$896.00
		8505307	14X17.5 HVY DTY76OTW			$780.00
		8505407	14X17.5 SVR DTY76OTW			$1,500.00
FRONT ATTACHMENTS						
BUCKETS						
SD_K5231 BUCKETS						
		761254	72" HD Ext. w/ SmartFit Teeth **(1829 mm), 17.4 cu. ft. Heaped Capacity**			$1,692.00
		761255	78" HD Ext. w/ SmartFit Teeth **(1981 mm), 18.9 cu. ft. Heaped Capacity**			$1,898.00
		761256	84" HD Ext. w/ SmartFit Teeth **(2134 mm), 20.5 cu. ft. Heaped Capacity**			$2,032.00
		XK5231X	No Bucket			No Charge
Dirt & Foundry Bucket						
		761125	72" Dirt & Foundry Bucket **(1829 mm), 16.2 cu. ft. Heaped Capacity**			$1,000.00
		761126	78" Dirt & Foundry Bucket **(1981 mm), 17.7 cu. ft. Heaped Capacity**			$1,038.00
Heavy Duty Dirt Bucket						
		761142	72" Heavy Duty Dirt Bucket **(1829 mm), 14.1 cu. ft. Heaped Capacity**			$1,409.00
		761143	78" Heavy Duty Dirt Bucket **(1981 mm), 15.5 cu. ft. Heaped Capacity**			$1,538.00
		761144	84" Heavy Duty Dirt Bucket **(2134 mm), 17.0 cu. ft. Heaped Capacity**			$1,589.00
Light Material Bucket						
		761136	72" Light Material Bucket **(1829 mm), 23.3 cu. ft. Heaped Capacity**			$841.00
		761137	84" Light Material Bucket **(2134 mm), 27.5 cu. ft. Heaped Capacity**			$981.00
Low Profile Bucket						
		761129	72" Low Profile Bucket **(1829 mm), 14.8 cu. ft. Heaped Capacity**			$903.00
Low Profile Extended Bucket						
		761132	72" Low Profile Extended **(1829 mm), 17.7 cu. ft. Heaped Capacity**			$1,004.00
		761133	78" Low Profile Extended **(1981 mm), 19.1 cu. ft. Heaped Capacity**			$1,086.00
		761134	84" Low Profile Extended **(2134 mm), 20.5 cu. ft. Heaped Capacity**			$1,173.00
SPILL GUARDS						
SD_K5400 SPILL GUARDS						
		XK5400X	No Spill Guard			No Charge
BOLT ON CUTTING EDGES						
SD_K6399 BOLT ON CUTTING EDGE						
		XK6399X	No Bolt on Cutting Edge			No Charge
		761147	72" Bolt on Cutting Edge			$241.00
		761148	78" Bolt on Cutting Edge			$259.00
		761149	84" Bolt on Cutting Edge			$279.00

SR270 T4 FINAL SKID STEER LOADER US PRICE LIST

Factory Supplied Attachments

Order Code			Description	Weight	Factory Data	List Price
Basic Attachments						
		735006006	Beacon Kit	1 LB		$154.00
		735007006	4-Corner LED Strobe Kit	24 LB		$500.00
		735159126	Heater Complete Kit	135 LB		$1,374.00
		735158196	HVAC Complete For use with SR270 Tier 4 Final Must order applicable harness. Reference dependency matrix.	394 LB		$2,951.00
		735146006	Three Point Seat Belt	4 LB		$233.00
		735011006	Glass Front Door Kit Center mounted wiper Requires three point seat belt. Must order applicable harness. Reference dependency matrix.	182 LB		$1,543.00
		735012006	Demo Front Door Kit Center mounted wiper Requires three point seat belt. Must order applicable harness. Reference dependency matrix.	182 LB		$2,711.00
		735013006	Cab Side Windows Kit	139 LB		$865.00
		735016006	Radio Kit Must order applicable harness. Reference dependency matrix.	16 LB		$413.00
		735150006	Open Cab Interior Trim Kit KIT, OPEN CAB TRIM-NON-EU	25 LB		$372.00
		735020096	Road Light Kit For use with SR270 Tier 4 Final	111 LB		$606.00
		735021036	Multi-Function Front Electrical Mech Kit For use with SR270 Tier 4 Final Must order applicable handle. Reference dependency matrix.	62 LB		$274.00
		735125036	Multi-Function Front Electrical E-H Kit For use with SR270 Tier 4 Final Must order applicalbe handle. Reference dependency matrix.	97 LB		$274.00
		735022026	One Way Self Level Kit	14 LB		$485.00
		735023006	Ride Control Kit Must order applicable handle. Reference dependency martix.	33 LB		$481.00
		735025116	High Flow Auxiliary Kit For use with SR270 Tier 4 Final Must order applicable harness. Reference dependency matrix.	210 LB		$2,519.00
		735027066	Second Hydraulic Front Auxiliary Kit Connect under pressure (C.U.P) Must order applicable handle. Reference dependency matrix.	99 LB		$1,029.00
		735036036	4-Point Lift Hook Kit For use with SR270 Tier 4 Final, SV300 Tier 4 Final, SV340 Tier 4 Final	20 LB		$222.00
		735037006	Single Point Lift Hook Kit	289 LB		$1,029.00
		735038006	FOPS Level 2 Modification Kit	61 LB		$343.00
		735039026	Extra Counterweight Kit	362 LB		$687.00
		735045046	Foot Control Conversion Kit Not available for units equipped with Electro Hydraulic (EH) controls.	52 LB		$615.00
		735045086	Foot Control Conversion Kit For use with Tier 4 Final built after serial NFM418327 Not available for units equipped with Electro Hydraulic (EH) controls.	55 LB		$700.00
		735046046	Hand Control Conversion Kit Used for units built AFTER s/n NFM418327	76 LB		$824.00
		735046056	Hand Control Conversion Kit For use with units built PRIOR to S/N NDM461595 (SR220 Tier 4 Interim), NDM443253 (SR250 Tier 4 Interim), NDM469210 (SV250 Tier 4 Interim) and NDM460105 (SV300 Tier 4 Interim)	77 LB		$824.00
		735046076	Hand Control Conversion Kit Use with units built PRIOR to s/n NFM418327	76 LB		$750.00
		735142006	Cylinder Guard Kit	21 LB		$739.00
		735024006	Hydraulic Coupler Kit Must order applicable harness. Reference dependency matrix.	50 LB		$1,236.00
		735168006	Aspirator (Precleaner) Kit For use with SR270 Tier 4 Final	39 LB		$683.00
Dirt & Foundry Bucket						
		735055016	72" Dirt & Foundry Bucket (1829 mm), 16.2 cu. ft. Heaped Capacity	407 LB		$1,000.00
		735056016	78" Dirt & Foundry Bucket (1981 mm), 17.7 cu. ft. Heaped Capacity	429 LB		$1,038.00
Low Profile Bucket						
		735059016	72" Low Profile Bucket (1829 mm), 14.8 cu. ft. Heaped Capacity	471 LB		$903.00

SR270 T4 FINAL SKID STEER LOADER US PRICE LIST

Low Profile Extended Bucket

		735062016	72" Low Profile Extended Bucket (1829 mm), 17.7 cu. ft. Heaped Capacity	504 LB		$1,004.00
		735063016	78" Low Profile Extended Bucket (1981 mm), 19.1 cu. ft. Heaped Capacity	531 LB		$1,086.00
		735064016	84" Low Profile Extended Bucket (2134 mm), 20.5 cu. ft. Heaped Capacity	607 LB		$1,173.00

Light Material Bucket

		735066016	72" Light Material Bucket (1829 mm), 23.3 cu. ft. Heaped Capacity	466 LB		$841.00
		735067016	84" Light Material Bucket (2134 mm), 27.5 cu. ft. Heaped Capacity	532 LB		$981.00

Manure & Slurry Bucket

		735069016	72" Manure-Slurry Bucket (1829 mm), 19.1 cu. ft. Heaped Capacity	469 LB		$856.00
		735070016	84" Manure-Slurry Bucket (2134 mm), 22.6 cu. ft. Heaped Capacity	535 LB		$995.00

Heavy Duty Dirt Bucket

		735072016	72" Heavy Duty Dirt Bucket (1829 mm), 14.1 cu. ft. Heaped Capacity	501 LB		$1,409.00
		735073016	78" Heavy Duty Dirt Bucket (1981 mm), 15.5 cu. ft. Heaped Capacity	526 LB		$1,538.00
		735074016	84" Heavy Duty Dirt Bucket (2134 mm), 17.0 cu. ft. Heaped Capacity	550 LB		$1,589.00

SmartFit Teeth

		735184006	72" HDE Bucket w/ Teeth (1829 mm), 17.4 cu. ft. Heaped Capacity	624 LB		$1,692.00
		735185006	78" HDE Bucket w/ Teeth (1981 mm), 18.9 cu. ft. Heaped Capacity	697 LB		$1,898.00
		735186006	84" HDE Bucket w/ Teeth (2134 mm), 20.5 cu. ft. Heaped Capacity	728 LB		$2,032.00

Heavy Duty Tire Assembly

		735094006	12x16.5 Heavy Duty (70 OTW) RH Kit	141 LB		$417.00
		735172006	RH 14X17.5 HVY DUTY 76OTW	150 LB		$895.00
		735175006	LH 14X17.5 HVY DUTY 76OTW	150 LB		$895.00
		735114006	12x16.5 Heavy Duty (70 OTW) LH Kit	141 LB		$417.00

Premium Tire Assembly

		735095006	12x16.5 Premium (70 OTW) RH Kit Galaxy Beefy Baby III	152 LB		$610.00
		735115006	12x16.5 Premium (70 OTW) LH Kit Galaxy Beefy Baby III	152 LB		$610.00

Non-Pneumatic Tire Assembly

		735182006	KIT RH 12X16.5 TWEEL	226 LB		$850.00
		735183006	KIT LH 12X16.5 TWEEL	178 LB		$850.00

Severe Duty Tire Assembly

		735097006	12x16.5 Severe Duty (70 OTW) RH Kit	168 LB		$645.00
		735173006	RH 14X17.5 SVER DUTY76OTW	187 LB		$809.00
		735176006	LH 14X17.5 SVER DUTY76OTW	187 LB		$809.00
		735117006	12x16.5 Severe Duty (70 OTW) LH Kit	168 LB		$645.00

Mining Tire Assembly

		735098006	12x16.5 Mining (70 OTW) RH Kit	160 LB		$712.00
		735118006	12x16.5 Mining (70 OTW) LH Kit	160 LB		$712.00

SV280 T4 FINAL SKID STEER LOADER US PRICE LIST

COMMERCIAL MODEL	Weight	Factory Data	List Price
SV280 T4 FINAL	8,090 LBS.		$64,594.00

SV280 T4 FINAL SKID STEER LOADER US PRICE LIST

Factory Supplied Options

Order Code			Description	Weight	Factory Data	List Price
CONTROLS AND TRANSMISSION						
SD_01401 DRIVE CONTROL TYPE						
		761041	Hand and Foot Controls **Hand (Loader Drive), Foot (Bucket and Boom)**			No Charge
		761040	Hand Controls **H-Pattern/Mechanical**			No Charge
		761042	E-H Controls **Electro-Hydraulic Switchable (ISO-H Pattern) Controls**			No Charge
SD_01100 CONTROLS LEVEL						
		761029	2 Speed Mechanical Controls			No Charge
		761031	2 Speed E-H Controls			$2,095.00
ROPS/CAB						
SD_05009 CAB						
		761043	Open Cab (No Heat or HVAC) **with top window and keyed start**			($5,320.00)
		761045	Enclosed Cab with HVAC **Includes side windows, front glass door with wiper, shoulder belt, radio with speakers and keyless start**			No Charge
		761183	Enclosed Cab w/HVAC -Demo Door **Includes side windows, 1/2" polycarbonate front door with wiper, shoulder belt, radio with speakers and keyless start**			$1,781.00
SD_05185 CAB SEAT						
		761052	Suspension Seat (Vinyl)			($582.00)
		761062	Air Ride Suspension Seat **(Fabric) with temperature control** **(may not be ordered with Open Cab option 761043)**			No Charge
SD_K6480 HEAVY DUTY FRONT LIGHTS						
		761201	Heavy Duty Front Lights			No Charge
REAR DOOR						
SD_39021 REAR DOOR						
		761205	Heavy Duty Rear Door			No Charge
COUPLER						
SD_K5101 COUPLERS						
		726003	Manual Coupler			($1,027.00)
		761206	Heavy Duty Hydraulic Coupler			No Charge
BLOCK HEATER						
SD_02086 BLOCK HEATER						
		761048	Block Heater (120V)			No Charge
OPERATOR MANUALS						
SD_32035 LANGUAGE OPTIONS						
		761085	English			No Charge
		761088	French			No Charge
		761097	Spanish			No Charge
OPTIONAL PACKAGES						
SD_01201 OPTION PACKAGES						
		761034	Front Electric/Multi-Function **Contains Front Electric (Multi-Function) for Standard Auxiliaries**			No Charge
		761035	Performance w/Front Electric **Contains ON/OFF One-Way Self Leveling, Ride Control and Front Electric**			$1,172.00
		761036	High Flow Package **Contains High Flow Hydraulics with Front Electric**			$1,874.00
		761037	High Flow Plus Package **Contains Front Electric, High Flow Hydraulics, ON/OFF One-Way Self Leveling and Ride Control**			$3,047.00

SV280 T4 FINAL SKID STEER LOADER US PRICE LIST

TIRES						
SD_16068 TIRE OPTIONS						
		8505707	12x16.5 TWEEL All Terrain			$3,400.00
		8503107	12x16.5 Heavy Duty (70 OTW)			No Charge
		8503207	12x16.5 Premium (70 OTW)			$506.00
		8503407	12x16.5 Severe Duty (70 OTW)			$800.00
		8503507	12x16.5 Mining (70 OTW)			$896.00
		8505307	14X17.5 HVY DTY76OTW			$780.00
		8505407	14X17.5 SVR DTY76OTW			$1,500.00
FRONT ATTACHMENTS						
BUCKETS						
SD_K5231 BUCKETS						
		761254	72" HD Ext. w/ SmartFit Teeth **(1829 mm), 17.4 cu. ft. Heaped Capacity**			$1,692.00
		761255	78" HD Ext. w/ SmartFit Teeth **(1981 mm), 18.9 cu. ft. Heaped Capacity**			$1,898.00
		761256	84" HD Ext. w/ SmartFit Teeth **(2134 mm), 20.5 cu. ft. Heaped Capacity**			$2,032.00
		XK5231X	No Bucket			No Charge
Dirt & Foundry Bucket						
		761125	72" Dirt & Foundry Bucket **(1829 mm), 16.2 cu. ft. Heaped Capacity**			$1,000.00
		761126	78" Dirt & Foundry Bucket **(1981 mm), 17.7 cu. ft. Heaped Capacity**			$1,038.00
Heavy Duty Dirt Bucket						
		761142	72" Heavy Duty Dirt Bucket **(1829 mm), 14.1 cu. ft. Heaped Capacity**			$1,409.00
		761143	78" Heavy Duty Dirt Bucket **(1981 mm), 15.5 cu. ft. Heaped Capacity**			$1,538.00
		761144	84" Heavy Duty Dirt Bucket **(2134 mm), 17.0 cu. ft. Heaped Capacity**			$1,589.00
Light Material Bucket						
		761136	72" Light Material Bucket **(1829 mm), 23.3 cu. ft. Heaped Capacity**			$841.00
		761137	84" Light Material Bucket **(2134 mm), 27.5 cu. ft. Heaped Capacity**			$981.00
Low Profile Bucket						
		761129	72" Low Profile Bucket **(1829 mm), 14.8 cu. ft. Heaped Capacity**			$903.00
Low Profile Extended Bucket						
		761132	72" Low Profile Extended **(1829 mm), 17.7 cu. ft. Heaped Capacity**			$1,004.00
		761133	78" Low Profile Extended **(1981 mm), 19.1 cu. ft. Heaped Capacity**			$1,086.00
		761134	84" Low Profile Extended **(2134 mm), 20.5 cu. ft. Heaped Capacity**			$1,173.00
SPILL GUARDS						
SD_K5400 SPILL GUARDS						
		XK5400X	No Spill Guard			No Charge
BOLT ON CUTTING EDGES						
SD_K6399 BOLT ON CUTTING EDGE						
		XK6399X	No Bolt on Cutting Edge			No Charge
		761147	72" Bolt on Cutting Edge			$241.00
		761148	78" Bolt on Cutting Edge			$259.00
		761149	84" Bolt on Cutting Edge			$279.00

SV280 T4 FINAL SKID STEER LOADER US PRICE LIST

Factory Supplied Attachments

Order Code			Description	Weight	Factory Data	List Price
Basic Attachments						
		735030006	Heavy Duty Rear Door Kit	32 LB		$308.00
		735006006	Beacon Kit	1 LB		$154.00
		735007006	4-Corner LED Strobe Kit	24 LB		$500.00
		735159046	Heater Complete Kit For use with SR240 Tier 4 Final, SV280 Tier 4 Final Must order applicable harness. Reference dependency matrix.	141 LB		$1,374.00
		735158156	HVAC Complete For use with SV280 Tier 4 Final Must order applicable harness. Reference dependency matrix.	381 LB		$2,951.00
		735146006	Three Point Seat Belt	4 LB		$233.00
		735011006	Glass Front Door Kit Center mounted wiper Requires three point seat belt. Must order applicable harness. Reference dependency matrix.	182 LB		$1,543.00
		735012006	Demo Front Door Kit Center mounted wiper Requires three point seat belt. Must order applicable harness. Reference dependency matrix.	182 LB		$2,711.00
		735013006	Cab Side Windows Kit	139 LB		$865.00
		735016006	Radio Kit Must order applicable harness. Reference dependency matrix.	16 LB		$413.00
		735150006	Open Cab Interior Trim Kit KIT, OPEN CAB TRIM-NON-EU	25 LB		$372.00
		735021016	Multi-Function Front Electrical Mech Kit Must order applicable handle. Reference dependency matrix.	11 LB		$274.00
		735125016	Multi-Function Front Electrical E-H Kit Must order applicalbe handle. Reference dependency matrix.	11 LB		$274.00
		735022066	One Way Self Level Kit	14 LB		$485.00
		735023006	Ride Control Kit Must order applicable handle. Reference dependency martix.	33 LB		$481.00
		735024016	Hydraulic Coupler Kit Must order applicable harness. Reference dependency matrix.	159 LB		$1,236.00
		735025066	High Flow Auxiliary Kit For use with SV250 Tier 4 Interim, SV280 Tier 4 Final and SV300 Tier 4 Interim Must order applicable harness. Reference dependency matrix.	191 LB		$2,519.00
		735027056	Second Hydraulic Front Auxiliary Kit Connect under pressure (C.U.P.) Must order applicable handle. Reference dependency matrix.	99 LB		$1,029.00
		735036026	4-Point Lift Hook Kit For use with SR240 T4 Final, SV280 Tier 4 Final	11 LB		$222.00
		735037046	Single Point Lift Hook Kit	269 LB		$1,029.00
		735038006	FOPS Level 2 Modification Kit	61 LB		$343.00
		735039026	Extra Counterweight Kit	362 LB		$687.00
		735040066	Aspirator (Precleaner) Kit For use with SV250 T4 Interim, and SV300 T4 Interim	15 LB		$317.00
		735045046	Foot Control Conversion Kit For use with Tier 4 Interim and Final. Not available for units equipped with Electro Hydraulic (EH) controls.	52 LB		$615.00
		735046046	Hand Control Conversion Kit Used for units built AFTER s/n NFM418327	76 LB		$824.00
		735046056	Hand Control Conversion Kit For use with units built PRIOR to S/N NDM461595 (SR220 Tier 4 Interim), NDM443253 (SR250 Tier 4 Interim), NDM469210 (SV250 Tier 4 Interim) and NDM460105 (SV300 Tier 4 Interim)	77 LB		$824.00
		735046076	Hand Control Conversion Kit Use with units built PRIOR to s/n NFM418327	76 LB		$750.00
		735142006	Cylinder Guard Kit	21 LB		$739.00
		735020136	Road Lights Kit	19 LB		$910.00
		735163006	Heavy Duty Rear Door For use with SR220 T4 Interim, SR240 T4 Final, SR250 T4 Interim, SV250 T4 Interim, SV280 T4 Final and SV300 T4 Interim	140 LB		$718.00
		735178036	Radiator Debris Kit	10 LB		$333.00
Dirt & Foundry Bucket						
		735055016	72" Dirt & Foundry Bucket (1829 mm), 16.2 cu. ft. Heaped Capacity	407 LB		$1,000.00
		735056016	78" Dirt & Foundry Bucket (1981 mm), 17.7 cu. ft. Heaped Capacity	429 LB		$1,038.00

SV280 T4 FINAL SKID STEER LOADER US PRICE LIST

Low Profile Bucket						
		735059016	72" Low Profile Bucket (1829 mm), 14.8 cu. ft. Heaped Capacity	471 LB		$903.00
Low Profile Extended Bucket						
		735062016	72" Low Profile Extended Bucket (1829 mm), 17.7 cu. ft. Heaped Capacity	504 LB		$1,004.00
		735063016	78" Low Profile Extended Bucket (1981 mm), 19.1 cu. ft. Heaped Capacity	531 LB		$1,086.00
		735064016	84" Low Profile Extended Bucket (2134 mm), 20.5 cu. ft. Heaped Capacity	607 LB		$1,173.00
Light Material Bucket						
		735066016	72" Light Material Bucket (1829 mm), 23.3 cu. ft. Heaped Capacity	466 LB		$841.00
		735067016	84" Light Material Bucket (2134 mm), 27.5 cu. ft. Heaped Capacity	532 LB		$981.00
Manure & Slurry Bucket						
		735069016	72" Manure-Slurry Bucket (1829 mm), 19.1 cu. ft. Heaped Capacity	469 LB		$856.00
		735070016	84" Manure-Slurry Bucket (2134 mm), 22.6 cu. ft. Heaped Capacity	535 LB		$995.00
Heavy Duty Dirt Bucket						
		735072016	72" Heavy Duty Dirt Bucket (1829 mm), 14.1 cu. ft. Heaped Capacity	501 LB		$1,409.00
		735073016	78" Heavy Duty Dirt Bucket (1981 mm), 15.5 cu. ft. Heaped Capacity	526 LB		$1,538.00
		735074016	84" Heavy Duty Dirt Bucket (2134 mm), 17.0 cu. ft. Heaped Capacity	550 LB		$1,589.00
SmartFit Teeth						
		735184006	72" HDE Bucket w/ Teeth (1829 mm), 17.4 cu. ft. Heaped Capacity	624 LB		$1,692.00
		735185006	78" HDE Bucket w/ Teeth (1981 mm), 18.9 cu. ft. Heaped Capacity	697 LB		$1,898.00
		735186006	84" HDE Bucket w/ Teeth (2134 mm), 20.5 cu. ft. Heaped Capacity	728 LB		$2,032.00
Heavy Duty Tire Assembly						
		735094006	12x16.5 Heavy Duty (70 OTW) RH Kit	141 LB		$417.00
		735172006	RH 14X17.5 HVY DUTY 76OTW	150 LB		$895.00
		735175006	LH 14X17.5 HVY DUTY 76OTW	150 LB		$895.00
		735114006	12x16.5 Heavy Duty (70 OTW) LH Kit	141 LB		$417.00
Premium Tire Assembly						
		735095006	12x16.5 Premium (70 OTW) RH Kit Galaxy Beefy Baby III	152 LB		$610.00
		735115006	12x16.5 Premium (70 OTW) LH Kit Galaxy Beefy Baby III	152 LB		$610.00
Non-Pneumatic Tire Assembly						
		735182006	KIT RH 12X16.5 TWEEL	226 LB		$850.00
		735183006	KIT LH 12X16.5 TWEEL	178 LB		$850.00
Severe Duty Tire Assembly						
		735097006	12x16.5 Severe Duty (70 OTW) RH Kit	168 LB		$645.00
		735117006	12x16.5 Severe Duty (70 OTW) LH Kit	168 LB		$645.00
		735173006	RH 14X17.5 SVER DUTY76OTW	187 LB		$809.00
		735176006	LH 14X17.5 SVER DUTY76OTW	187 LB		$809.00
Mining Tire Assembly						
		735098006	12x16.5 Mining (70 OTW) RH Kit	160 LB		$712.00
		735118006	12x16.5 Mining (70 OTW) LH Kit	160 LB		$712.00

SV340 T4 FINAL SKID STEER LOADER US PRICE LIST

COMMERCIAL MODEL	Weight	Factory Data	List Price
SV340 T4 FINAL.	9,100 LB		$81,080.00

(Ex Works Wichita, KS)

Factory Supplied Options

Order Code			Description	Weight	Factory Data	List Price
CONTROLS AND TRANSMISSION						
SD_01401 DRIVE CONTROL TYPE						
		761041	Hand and Foot Controls **Hand (Loader Drive), Foot (Bucket and Boom)**			No Charge
		761040	Hand Controls **H-Pattern/Mechanical**			No Charge
		761042	E-H Controls **Electro-Hydraulic Switchable (ISO-H Pattern) Controls**			No Charge
SD_01100 CONTROLS LEVEL						
		761029	2 Speed Mechanical Controls			No Charge
		761031	2 Speed E-H Controls			$2,095.00
ROPS/CAB						
SD_05009 CAB						
		761043	Open Cab (No Heat or HVAC) **with top window and keyed start**			($5,320.00)
		761045	Enclosed Cab with HVAC **Includes side windows, front glass door with wiper, shoulder belt, radio with speakers and keyless start**			No Charge
		761183	Enclosed Cab w/HVAC -Demo Door **Includes side windows, 1/2" polycarbonate front door with wiper, shoulder belt, radio with speakers and keyless start**			$1,781.00
SD_05185 CAB SEAT						
		761052	Suspension Seat (Vinyl)			($582.00)
		761062	Air Ride Suspension Seat **(Fabric) with temperature control** **(may not be ordered with Open Cab option 761043)**			No Charge
SD_K6480 HEAVY DUTY FRONT LIGHTS						
		761201	Heavy Duty Front Lights			No Charge
COUPLER						
SD_K5101 COUPLERS						
		726003	Manual Coupler			($1,027.00)
		761206	Heavy Duty Hydraulic Coupler			No Charge
BLOCK HEATER						
SD_02086 BLOCK HEATER						
		761048	Block Heater (120V)			No Charge
OPERATOR MANUALS						
SD_32035 LANGUAGE OPTIONS						
		761085	English			No Charge
		761088	French			No Charge
		761097	Spanish			No Charge
OPTIONAL PACKAGES						
SD_01201 OPTION PACKAGES						
		761034	Front Electric/Multi-Function **Contains Front Electric (Multi-Function) for Standard Auxiliaries**			No Charge
		761035	Performance w/Front Electric **Contains ON/OFF One-Way Self Leveling, Ride Control and Front Electric**			$1,172.00
		761036	High Flow Package **Contains High Flow Hydraulics with Front Electric**			$1,874.00
		761037	High Flow Plus Package **Contains Front Electric, High Flow Hydraulics, ON/OFF One-Way Self Leveling and Ride Control**			$3,047.00
		761039	Enhanced High Flow Package **Only available with units equipped with EH Controls. Contains 4000 PSI High Flow Hydraulics, Second Auxiliaries, Front Electric, High Flow Hydraulics, ON/OFF One-way Self Leveling and Ride Control**			$6,317.00

SV340 T4 FINAL SKID STEER LOADER US PRICE LIST

TIRES						
SD_16068 TIRE OPTIONS						
		8505707	12x16.5 TWEEL All Terrain			$3,400.00
		8503107	12x16.5 Heavy Duty (70 OTW)			No Charge
		8503207	12x16.5 Premium (70 OTW)			$506.00
		8503407	12x16.5 Severe Duty (70 OTW)			$800.00
		8503507	12x16.5 Mining (70 OTW)			$896.00
		8505307	14X17.5 HVY DTY76OTW			$780.00
		8505407	14X17.5 SVR DTY76OTW			$1,500.00
FRONT ATTACHMENTS						
BUCKETS						
SD_K5231 BUCKETS						
		761254	72" HD Ext. w/ SmartFit Teeth **(1829 mm), 17.4 cu. ft. Heaped Capacity**			$1,692.00
		761255	78" HD Ext. w/ SmartFit Teeth **(1981 mm), 18.9 cu. ft. Heaped Capacity**			$1,898.00
		761256	84" HD Ext. w/ SmartFit Teeth **(2134 mm), 20.5 cu. ft. Heaped Capacity**			$2,032.00
		XK5231X	No Bucket			No Charge
Dirt & Foundry Bucket						
		761125	72" Dirt & Foundry Bucket **(1829 mm), 16.2 cu. ft. Heaped Capacity**			$1,000.00
		761126	78" Dirt & Foundry Bucket **(1981 mm), 17.7 cu. ft. Heaped Capacity**			$1,038.00
Heavy Duty Dirt Bucket						
		761142	72" Heavy Duty Dirt Bucket **(1829 mm), 14.1 cu. ft. Heaped Capacity**			$1,409.00
		761143	78" Heavy Duty Dirt Bucket **(1981 mm), 15.5 cu. ft. Heaped Capacity**			$1,538.00
		761144	84" Heavy Duty Dirt Bucket **(2134 mm), 17.0 cu. ft. Heaped Capacity**			$1,589.00
Light Material Bucket						
		761136	72" Light Material Bucket **(1829 mm), 23.3 cu. ft. Heaped Capacity**			$841.00
		761137	84" Light Material Bucket **(2134 mm), 27.5 cu. ft. Heaped Capacity**			$981.00
Low Profile Bucket						
		761129	72" Low Profile Bucket **(1829 mm), 14.8 cu. ft. Heaped Capacity**			$903.00
Low Profile Extended Bucket						
		761132	72" Low Profile Extended **(1829 mm), 17.7 cu. ft. Heaped Capacity**			$1,004.00
		761133	78" Low Profile Extended **(1981 mm), 19.1 cu. ft. Heaped Capacity**			$1,086.00
		761134	84" Low Profile Extended **(2134 mm), 20.5 cu. ft. Heaped Capacity**			$1,173.00
SPILL GUARDS						
SD_K5400 SPILL GUARDS						
		XK5400X	No Spill Guard			No Charge
BOLT ON CUTTING EDGES						
SD_K6399 BOLT ON CUTTING EDGE						
		XK6399X	No Bolt on Cutting Edge			No Charge
		761147	72" Bolt on Cutting Edge			$241.00
		761148	78" Bolt on Cutting Edge			$259.00
		761149	84" Bolt on Cutting Edge			$279.00

SV340 T4 FINAL SKID STEER LOADER US PRICE LIST

Factory Supplied Attachments

Order Code			Description	Weight	Factory Data	List Price
Basic Attachments						
		735006006	Beacon Kit	1 LB		$154.00
		735007006	4-Corner LED Strobe Kit	24 LB		$500.00
		735159126	Heater Complete Kit	135 LB		$1,374.00
		735158206	HVAC Complete For use with SV300 Tier 4 Final Must order applicable harness. Reference dependency matrix.	396 LB		$2,951.00
		735146006	Three Point Seat Belt	4 LB		$233.00
		735011006	Glass Front Door Kit Center mounted wiper Requires three point seat belt. Must order applicable harness. Reference dependency matrix.	182 LB		$1,543.00
		735012006	Demo Front Door Kit Center mounted wiper Requires three point seat belt. Must order applicable harness. Reference dependency matrix.	182 LB		$2,711.00
		735013006	Cab Side Windows Kit	139 LB		$865.00
		735016006	Radio Kit Must order applicable harness. Reference dependency matrix.	16 LB		$413.00
		735150006	Open Cab Interior Trim Kit KIT, OPEN CAB TRIM-NON-EU	25 LB		$372.00
		735021046	Multi-Function Front Electrical Mech Kit Must order applicable handle. Reference dependency matrix.	8 LB		$274.00
		735125046	Multi-Function Front Electrical E-H Kit For use with SV300 Tier 4 Final and SV340 Tier 4 Final Must order applicable handle. Reference dependency matrix.	62 LB		$274.00
		735022076	One Way Self Level Kit	14 LB		$485.00
		735023046	Ride Control/Glide Ride Kit	33 LB		$481.00
		735027056	Second Hydraulic Front Auxiliary Kit Connect under pressure (C.U.P.) Must order applicable handle. Reference dependency matrix.	99 LB		$1,029.00
		735036036	4-Point Lift Hook Kit For use with SR270 Tier 4 Final, SV300 Tier 4 Final, SV340 Tier 4 Final	20 LB		$222.00
		735037046	Single Point Lift Hook Kit	269 LB		$1,029.00
		735038006	FOPS Level 2 Modification Kit	61 LB		$343.00
		735039026	Extra Counterweight Kit	362 LB		$687.00
		735045046	Foot Control Conversion Kit Not available for units equipped with Electro Hydraulic (EH) controls.	52 LB		$615.00
		735046046	Hand Control Conversion Kit Used for units built AFTER s/n NFM418327	76 LB		$824.00
		735046056	Hand Control Conversion Kit For use with units built PRIOR to S/N NDM461595 (SR220 Tier 4 Interim), NDM443253 (SR250 Tier 4 Interim), NDM469210 (SV250 Tier 4 Interim) and NDM460105 (SV300 Tier 4 Interim)	77 LB		$824.00
		735046076	Hand Control Conversion Kit Use with units built PRIOR to s/n NFM418327	76 LB		$750.00
		735024056	Hydraulic Coupler Kit	50 LB		$1,345.00
		735142006	Cylinder Guard Kit	21 LB		$739.00
		735168016	Aspirator (Precleaner) Kit For use with SV300 Tier 4 Final and SV340 Tier 4 Final	39 LB		$683.00
		735020116	Road Lights Kit	110 LB		$910.00
		735025136	High Flow Auxiliary For use with SV340 Tier 4 Final Must order applicable harness. Reference dependency matrix.	97 LB		$2,519.00
Dirt & Foundry Bucket						
		735055016	72" Dirt & Foundry Bucket (1829 mm), 16.2 cu. ft. Heaped Capacity	407 LB		$1,000.00
		735056016	78" Dirt & Foundry Bucket (1981 mm), 17.7 cu. ft. Heaped Capacity	429 LB		$1,038.00
Low Profile Bucket						
		735059016	72" Low Profile Bucket (1829 mm), 14.8 cu. ft. Heaped Capacity	471 LB		$903.00
Low Profile Extended Bucket						
		735062016	72" Low Profile Extended Bucket (1829 mm), 17.7 cu. ft. Heaped Capacity	504 LB		$1,004.00
		735063016	78" Low Profile Extended Bucket (1981 mm), 19.1 cu. ft. Heaped Capacity	531 LB		$1,086.00
		735064016	84" Low Profile Extended Bucket (2134 mm), 20.5 cu. ft. Heaped Capacity	607 LB		$1,173.00

SV340 T4 FINAL SKID STEER LOADER US PRICE LIST

Light Material Bucket

		735066016	72" Light Material Bucket (1829 mm), 23.3 cu. ft. Heaped Capacity	466 LB		$841.00
		735067016	84" Light Material Bucket (2134 mm), 27.5 cu. ft. Heaped Capacity	532 LB		$981.00

Manure & Slurry Bucket

		735069016	72" Manure-Slurry Bucket (1829 mm), 19.1 cu. ft. Heaped Capacity	469 LB		$856.00
		735070016	84" Manure-Slurry Bucket (2134 mm), 22.6 cu. ft. Heaped Capacity	535 LB		$995.00

Heavy Duty Dirt Bucket

		735072016	72" Heavy Duty Dirt Bucket (1829 mm), 14.1 cu. ft. Heaped Capacity	501 LB		$1,409.00
		735073016	78" Heavy Duty Dirt Bucket (1981 mm), 15.5 cu. ft. Heaped Capacity	526 LB		$1,538.00
		735074016	84" Heavy Duty Dirt Bucket (2134 mm), 17.0 cu. ft. Heaped Capacity	550 LB		$1,589.00

SmartFit Teeth

		735184006	72" HDE Bucket w/ Teeth (1829 mm), 17.4 cu. ft. Heaped Capacity	624 LB		$1,692.00
		735185006	78" HDE Bucket w/ Teeth (1981 mm), 18.9 cu. ft. Heaped Capacity	697 LB		$1,898.00
		735186006	84" HDE Bucket w/ Teeth (2134 mm), 20.5 cu. ft. Heaped Capacity	728 LB		$2,032.00

Heavy Duty Tire Assembly

		735094006	12x16.5 Heavy Duty (70 OTW) RH Kit	141 LB		$417.00
		735172006	RH 14X17.5 HVY DUTY 76OTW	150 LB		$895.00
		735175006	LH 14X17.5 HVY DUTY 76OTW	150 LB		$895.00
		735114006	12x16.5 Heavy Duty (70 OTW) LH Kit	141 LB		$417.00

Non-Pneumatic Tire Assembly

		735182006	KIT RH 12X16.5 TWEEL	226 LB		$850.00
		735183006	KIT LH 12X16.5 TWEEL	178 LB		$850.00

Severe Duty Tire Assembly

		735097006	12x16.5 Severe Duty (70 OTW) RH Kit	168 LB		$645.00
		735173006	RH 14X17.5 SVER DUTY76OTW	187 LB		$809.00
		735176006	LH 14X17.5 SVER DUTY76OTW	187 LB		$809.00
		735117006	12x16.5 Severe Duty (70 OTW) LH Kit	168 LB		$645.00

Mining Tire Assembly

		735098006	12x16.5 Mining (70 OTW) RH Kit	160 LB		$712.00
		735118006	12x16.5 Mining (70 OTW) LH Kit	160 LB		$712.00

TR270 T4 FINAL COMPACT TRACK LOADER US PRICE LIST

COMMERCIAL MODEL	Weight	Factory Data	List Price
TR270-T4 FINAL	9,765 LB		$65,421.00

TR270 T4 FINAL COMPACT TRACK LOADER US PRICE LIST

Factory Supplied Options

Order Code			Description	Weight	Factory Data	List Price
CONTROLS AND TRANSMISSION						
SD_01401 DRIVE CONTROL TYPE						
		761040	Hand Controls			No Charge
		761041	Hand and Foot Controls			No Charge
		761042	E-H Controls			No Charge
SD_01100 CONTROLS LEVEL						
		761029	2 Speed Mechanical Controls **H-Pattern**			($2,095.00)
		761031	2 Speed E-H Controls **Electro-Hydraulic Switchable (ISO-H Pattern) Controls with Two Speed**			No Charge
ROPS/CAB						
SD_05009 CAB						
		761043	Open Cab (No Heat or HVAC) **with top window and keyed start**			No Charge
		761045	Enclosed Cab with HVAC **Includes side windows, front glass door with wiper, shoulder belt, radio with speakers, and keyless start**			$5,664.00
		761183	Enclosed Cab w/HVAC -Demo Door **Includes side windows, 1/2" polycarbonate front glass door with wiper, shoulder belt, radio with speakers, and keyless start**			$7,445.00
SD_05016 OPEN CAB TRIM						
		X05016X	No Open Cab Interior Trim Pkg			No Charge
SD_05185 CAB SEAT						
		761052	Suspension Seat (Vinyl)			No Charge
		761062	Air Ride Suspension Seat **(Fabric) with temperature control** **(may not be ordered with Open Cab option 761043)**			$601.00
SD_K6480 HEAVY DUTY FRONT LIGHTS						
		761201	Heavy Duty Front Lights			No Charge
REAR DOOR						
SD_39021 REAR DOOR						
		761205	Heavy Duty Rear Door			No Charge
COUPLER						
SD_K5101 COUPLERS						
		726003	Manual Coupler			No Charge
		726004	Hydraulic Coupler			$1,051.00
BLOCK HEATER						
SD_02086 BLOCK HEATER						
		761048	Block Heater (120V)			No Charge
OPERATOR MANUALS						
SD_32035 LANGUAGE OPTIONS						
		761085	English			No Charge
		761088	French			No Charge
		761097	Spanish			No Charge
OPTIONAL PACKAGES						
SD_01201 OPTION PACKAGES						
		761034	Front Electric/Multi-Function **Contains Front Electric (Multi-function) for Standard Auxiliaries**			No Charge
		761035	Performance w/Front Electric **Contains ON/OFF One-Way Self Leveling, Ride Control, and Front Electric**			$1,173.00
		761036	High Flow Package **Contains High Flow Hydraulics with Front Electric**			$1,874.00
		761037	High Flow Plus Package **Contains Front Electric, High Flow Hydraulics, ON/OFF One-way Self Leveling and Ride Control**			$3,047.00

TR270 T4 FINAL COMPACT TRACK LOADER US PRICE LIST

TRACK BELT OPTIONS						
SD_10015 TRACK OPTIONS						
		8500117	320 mm (12.6 inch) **67" OTW**			No Charge
		8500167	320 BELT HD			$398.00
SD_39100 HEAVY DUTY TRACK COVERS						
		761204	Undercarriage Hose Covers			No Charge
FRONT ATTACHMENTS						
BUCKETS						
SD_K5231 BUCKETS						
		761254	72" HD Ext. w/ SmartFit Teeth **1829 mm, 17.4 cu. ft. Heaped Capacity**			$1,692.00
		761255	78" HD Ext. w/ SmartFit Teeth **1981 mm, 18.9 cu. ft. Heaped Capacity**			$1,898.00
		761256	84" HD Ext. w/ SmartFit Teeth **2134 mm, 20.5 cu. ft. Heaped Capacity**			$2,032.00
		XK5231X	No Bucket			No Charge
Dirt & Foundry Bucket						
		761125	72" Dirt & Foundry Bucket **1829 mm, 16.2 cu. ft. Heaped Capacity**			$1,000.00
		761126	78" Dirt & Foundry Bucket **1981 mm, 17.7 cu. ft. Heaped Capacity**			$1,038.00
Heavy Duty Dirt Bucket						
		761142	72" Heavy Duty Dirt Bucket **1829 mm, 14.1 cu. ft. Heaped Capacity**			$1,409.00
		761143	78" Heavy Duty Dirt Bucket **1981 mm, 15.5 cu. ft. Heaped Capacity**			$1,538.00
Light Material Bucket						
		761136	72" Light Material Bucket **1829 mm, 23.3 cu. ft. Heaped Capacity**			$897.00
		761137	84" Light Material Bucket **2134 mm, 27.5 cu. ft. Heaped Capacity**			$1,047.00
Low Profile Bucket						
		761129	72" Low Profile Bucket **1829 mm, 14.8 cu. ft. Heaped Capacity**			$903.00
Low Profile Extended Bucket						
		761132	72" Low Profile Extended **1829 mm, 17.7 cu. ft. Heaped Capacity**			$1,004.00
		761133	78" Low Profile Extended **1981 mm, 19.1 cu. ft. Heaped Capacity**			$1,086.00
		761134	84" Low Profile Extended **2134 mm, 20.5 cu. ft. Heaped Capacity**			$1,173.00
Manure & Slurry Bucket						
		761139	72" Manure-Slurry Bucket **1829 mm, 19.1 cu. ft. Heaped Capacity**			$856.00
		761140	84" Manure-Slurry Bucket **2134 mm, 22.6 cu. ft. Heaped Capacity**			$995.00
SPILL GUARDS						
SD_K5400 SPILL GUARDS						
		XK5400X	No Spill Guard			No Charge
BOLT ON CUTTING EDGES						
SD_K6399 BOLT ON CUTTING EDGE						
		XK6399X	No Bolt on Cutting Edge			No Charge
		761147	72" Bolt on Cutting Edge			$241.00
		761148	78" Bolt on Cutting Edge			$259.00
		761149	84" Bolt on Cutting Edge			$279.00

TR270 T4 FINAL COMPACT TRACK LOADER US PRICE LIST

Factory Supplied Attachments

Order Code			Description	Weight	Factory Data	List Price
Basic Attachments						
		735030006	Heavy Duty Rear Door Kit Not for use with TR270 Tier 4 Final	32 LB		$308.00
		735006006	Beacon Kit	1 LB		$154.00
		735007006	4-Corner LED Strobe Kit	24 LB		$500.00
		735159026	Heater Complete Kit For use with Tier 3 Must order applicable harness. Reference dependency matrix.	137 LB		$1,374.00
		735159046	Heater Complete Kit For use with Tier 4 Must order applicable harness. Reference dependency matrix.	141 LB		$1,374.00
		735158036	HVAC Complete For use with Tier 3 Must order applicable harness. Reference dependency matrix.	342 LB		$2,951.00
		735158106	HVAC Complete Kit For use with Tier 4 Must order applicable harness. Reference dependency matrix.	332 LB		$2,951.00
		735146006	Three Point Seat Belt	4 LB		$233.00
		735011006	Glass Front Door Kit Center mounted wiper Requires three point seat belt. Must order applicable harness. Reference dependency matrix.	182 LB		$1,543.00
		735012006	Demo Front Door Kit Center mounted wiper Requires three point seat belt. Must order applicable harness. Reference dependency matrix.	182 LB		$2,711.00
		735013006	Cab Side Windows Kit	139 LB		$865.00
		735016006	Radio Kit Must order applicable harness. Reference dependency matrix.	16 LB		$413.00
		735150006	Open Cab Interior Trim Kit For use with Open Cab. Covers interior sides and rear.	25 LB		$372.00
		735020066	Road Light Kit Must order applicable harness. Reference dependency matrix.	111 LB		$606.00
		735021006	Multi-Function Front Electrical Mech Kit For use with TR270 and TR320 Must order applicable handle. Reference dependency martix.	11 LB		$274.00
		735125006	Multi-Function Front Electrical E-H Kit For use with TR270 and TR320 Must order applicable handle. Reference dependency matrix.	11 LB		$274.00
		735022046	One Way Self Level Kit For use with TR270 and TR320	15 LB		$485.00
		735023006	Ride Control Kit Must order applicable handle. Reference dependency martix.	33 LB		$481.00
		735024006	Hydraulic Coupler Kit For use with TR270 and TR320 (units built PRIOR to S/N NDM462749	50 LB		$1,236.00
		735025016	High Flow Auxiliary Kit For use with Tier 3 Must order applicable harness. Reference dependency matrix.	189 LB		$2,519.00
		735025076	High Flow Auxiliary Kit For use with Tier 4 Must order applicable harness. Reference dependency matrix.	191 LB		$2,519.00
		735027016	Second Hydraulic Front Auxiliary Kit Connect under pressure (C.U.P.) Must order applicable handle. Reference dependency matrix.	81 LB		$1,029.00
		735036016	4-Point Lift Hook Kit	11 LB		$222.00
		735037016	Single Point Lift Hook Kit	284 LB		$1,029.00
		735038006	FOPS Level 2 Modification Kit	61 LB		$343.00
		735039016	Extra Counterweight Kit	202 LB		$413.00
		735040146	Aspirator (Precleaner) Kit For use with Tier 4	14 LB		$317.00
		735040026	Aspirator Kit For use with Tier 3	12 LB		$317.00
		735045046	Foot Control Conversion Kit For use with Tier 4	52 LB		$615.00
		735046046	Hand Control Conversion Kit For use with Tier 4	76 LB		$824.00
		735047006	120V Block Heater Kit	6 LB		$206.00
		735142006	Cylinder Guard Kit	21 LB		$739.00
		735152026	New Hood with Debris Seal Kit Contains new hood and additional sealing items Reduces debris ingression to engine compartment and chassis For use with TIER 3 models built prior to July 2012 ONLY	128 LB		$693.00
		735163006	Heavy Duty Rear Door For use with Tier 3	140 LB		$718.00
		735178026	Rediator Debris Kit	10 LB		$333.00

TR270 T4 FINAL COMPACT TRACK LOADER US PRICE LIST

Dirt & Foundry Bucket

		735055016	72" Dirt & Foundry Bucket (1829 mm), 16.2 cu. ft. Heaped Capacity	407 LB		$1,000.00
		735056016	78" Dirt & Foundry Bucket (1981 mm), 17.7 cu. ft. Heaped Capacity	429 LB		$1,038.00

Low Profile Bucket

		735059016	72" Low Profile Bucket (1829 mm), 14.8 cu. ft. Heaped Capacity	471 LB		$903.00

Low Profile Extended Bucket

		735062016	72" Low Profile Extended Bucket (1829 mm), 17.7 cu. ft. Heaped Capacity	504 LB		$1,004.00
		735063016	78" Low Profile Extended Bucket (1981 mm), 19.1 cu. ft. Heaped Capacity	531 LB		$1,086.00
		735064016	84" Low Profile Extended Bucket (2134 mm), 20.5 cu. ft. Heaped Capacity	607 LB		$1,173.00

Light Material Bucket

		735066016	72" Light Material Bucket (1829 mm), 23.3 cu. ft. Heaped Capacity	466 LB		$841.00
		735067016	84" Light Material Bucket (2134 mm), 27.5 cu. ft. Heaped Capacity	532 LB		$981.00

Manure & Slurry Bucket

		735069016	72" Manure-Slurry Bucket (1829 mm), 19.1 cu. ft. Heaped Capacity	469 LB		$856.00
		735070016	84" Manure-Slurry Bucket (2134 mm), 22.6 cu. ft. Heaped Capacity	535 LB		$995.00

Heavy Duty Dirt Bucket

		735072016	72" Heavy Duty Dirt Bucket (1829 mm), 14.1 cu. ft. Heaped Capacity	501 LB		$1,409.00
		735073016	78" Heavy Duty Dirt Bucket (1981 mm), 15.5 cu. ft. Heaped Capacity	526 LB		$1,538.00
		735074016	84" Heavy Duty Dirt Bucket (2134 mm), 17.0 cu. ft. Heaped Capacity	550 LB		$1,589.00

TR310 T4 FINAL COMPACT TRACK LOADERS US PRICE LIST

COMMERCIAL MODEL	Weight	Factory Data	List Price
TR310 T4 FINAL	8,880 LBS.		$68,766.00

TR310 T4 FINAL COMPACT TRACK LOADERS US PRICE LIST

Factory Supplied Options

Order Code			Description	Weight	Factory Data	List Price
CONTROLS AND TRANSMISSION						
SD_01401 DRIVE CONTROL TYPE						
		761040	Hand Controls **H-Pattern/Mechanical**			No Charge
		761041	Hand and Foot Controls **Hand (Loader Drive), Foot (Bucket and Boom)**			No Charge
		761042	E-H Controls **Electro-Hydraulic Switchable (ISO-H Pattern) Controls**			No Charge
SD_01100 CONTROLS LEVEL						
		761029	2 Speed Mechanical Controls			($2,095.00)
		761031	2 Speed E-H Controls			No Charge
ROPS/CAB						
SD_05009 CAB						
		761043	Open Cab (No Heat or HVAC) **with top window and keyed start**			No Charge
		761045	Enclosed Cab with HVAC **Includes side windows, front glass door with wiper, shoulder belt, radio with speakers and keyless start**			$5,664.00
		761183	Enclosed Cab w/HVAC -Demo Door **Includes side windows, 1/2" polycarbonate front glass door with wiper, shoulder belt, radio with speakers and keyless start**			$7,445.00
SD_05016 OPEN CAB TRIM						
		X05016X	No Open Cab Interior Trim Pkg			No Charge
SD_05185 CAB SEAT						
		761052	Suspension Seat (Vinyl)			No Charge
		761062	Air Ride Suspension Seat **(Fabric) with temperature control** **(may not be ordered with Open Cab option 761043)**			$601.00
SD_K6480 HEAVY DUTY FRONT LIGHTS						
		761201	Heavy Duty Front Lights			No Charge
REAR DOOR						
SD_39021 REAR DOOR						
		761205	Heavy Duty Rear Door			No Charge
COUPLER						
SD_K5101 COUPLERS						
		726003	Manual Coupler			No Charge
		726004	Hydraulic Coupler			$1,051.00
BLOCK HEATER						
SD_02086 BLOCK HEATER						
		761048	Block Heater (120V)			No Charge
OPERATOR MANUALS						
SD_32035 LANGUAGE OPTIONS						
		761085	English			No Charge
		761088	French			No Charge
		761097	Spanish			No Charge
OPTIONAL PACKAGES						
SD_01201 OPTION PACKAGES						
		761034	Front Electric/Multi-Function **Contains Front Electric (Multi-function) for Standard Auxiliaries**			No Charge
		761035	Performance w/Front Electric **Contains ON/OFF One-way Self Leveling, Ride Control, and Front Electric**			$1,173.00
		761036	High Flow Package **Contains High Flow Hydraulics with Front Electric**			$1,874.00
		761037	High Flow Plus Package **Contains Front Electric, High Flow Hydraulics, ON/OFF One-way Self Leveling and Ride Control**			$3,047.00
TRACK BELT OPTIONS						
SD_10015 TRACK OPTIONS						
		8500157	400 mm (15.7 inch) **74" OW**			No Charge
		8500177	400 BELT HD			$398.00
SD_39100 HEAVY DUTY TRACK COVERS						
		761204	Undercarriage Hose Covers			No Charge

TR310 T4 FINAL COMPACT TRACK LOADERS US PRICE LIST

FRONT ATTACHMENTS						
BUCKETS						
SD_K5231 BUCKETS						
		761255	78" HD Ext. w/ SmartFit Teeth **1981 mm, 18.9 cu. ft. Heaped Capacity**			$1,898.00
		761256	84" HD Ext. w/ SmartFit Teeth **2134 mm, 20.5 cu. ft. Heaped Capacity**			$2,032.00
		XK5231X	No Bucket			No Charge
Dirt & Foundry Bucket						
		761126	78" Dirt & Foundry Bucket **1981 mm, 17.7 cu. ft. Heaped Capacity**			$1,038.00
Heavy Duty Dirt Bucket						
		761143	78" Heavy Duty Dirt Bucket **1981 mm, 15.5 cu. ft. Heaped Capacity**			$1,538.00
		761144	84" Heavy Duty Dirt Bucket **2134 mm, 17.0 cu. ft. Heaped Capacity**			$1,589.00
Light Material Bucket						
		761137	84" Light Material Bucket **2134 mm, 27.5 cu. ft. Heaped Capacity**			$1,047.00
Low Profile Extended Bucket						
		761133	78" Low Profile Extended **1981 mm, 19.1 cu. ft. Heaped Capacity**			$1,086.00
		761134	84" Low Profile Extended **2134 mm, 20.5 cu. ft. Heaped Capacity**			$1,173.00
Manure & Slurry Bucket						
		761140	84" Manure-Slurry Bucket **2134 mm, 22.6 cu. ft. Heaped Capacity**			$995.00
SPILL GUARDS						
SD_K5400 SPILL GUARDS						
		XK5400X	No Spill Guard			No Charge
BOLT ON CUTTING EDGES						
SD_K6399 BOLT ON CUTTING EDGE						
		XK6399X	No Bolt on Cutting Edge			No Charge
		761148	78" Bolt on Cutting Edge			$259.00
		761149	84" Bolt on Cutting Edge			$279.00

TR310 T4 FINAL COMPACT TRACK LOADERS US PRICE LIST

Factory Supplied Attachments

Order Code			Description	Weight	Factory Data	List Price
Basic Attachments						
		735030006	Heavy Duty Rear Door Kit For use with Tier 3	32 LB		$308.00
		735006006	Beacon Kit	1 LB		$154.00
		735007006	4-Corner LED Strobe Kit	24 LB		$500.00
		735159046	Heater Complete Kit Reference dependency matrix.	141 LB		$1,374.00
		735158106	HVAC Complete Kit Must order applicable harness. Reference dependency matrix.	332 LB		$2,951.00
		735146006	Three Point Seat Belt	4 LB		$233.00
		735011006	Glass Front Door Kit Center mounted wiper Requires three point seat belt. Must order applicable harness. Reference dependency matrix.	182 LB		$1,543.00
		735012006	Demo Front Door Kit Center mounted wiper Requires three point seat belt. Must order applicable harness. Reference dependency matrix.	182 LB		$2,711.00
		735013006	Cab Side Windows Kit	139 LB		$865.00
		735016006	Radio Kit Must order applicable harness. Reference dependency matrix.	16 LB		$413.00
		735150006	Open Cab Interior Trim Kit For use with Open Cab. Covers interior sides and rear.	25 LB		$372.00
		735020066	Road Light Kit Must order applicable harness. Reference dependency matrix.	111 LB		$606.00
		735021006	Multi-Function Front Electrical Mech Kit For use with TR310 Tier 4 Final and TR320 Tier 3 and Tier 4 Interim Must order applicable handle. Reference dependency matrix.	11 LB		$274.00
		735125006	Multi-Function Front Electrical E-H Kit For use with TR310 Tier 4 Final, TR320 Tier 3 and Tier 4 Interim Must order applicable handle. Reference dependency matrix.	11 LB		$274.00
		735022046	One Way Self Level Kit	15 LB		$485.00

TR310 T4 FINAL COMPACT TRACK LOADERS US PRICE LIST

		735023006	Ride Control Kit Must order applicable handle. Reference dependency martix.	33 LB		$481.00
		735024006	Hydraulic Coupler Kit For use with TR310 Tier 4 Final, TR320 Tier 3 and Tier 4 Interim (units built PRIOR to S/N NDM462749)	50 LB		$1,236.00
		735025076	High Flow Auxiliary Kit Must order applicable harness. Reference dependency matrix.	191 LB		$2,519.00
		735027016	Second Hydraulic Front Auxiliary Kit Connect under pressure (C.U.P.) Must order applicable handle. Reference dependency matrix.	81 LB		$1,029.00
		735036016	4-Point Lift Hook Kit	11 LB		$222.00
		735037016	Single Point Lift Hook Kit	284 LB		$1,029.00
		735038006	FOPS Level 2 Modification Kit	61 LB		$343.00
		735039016	Extra Counterweight Kit	202 LB		$413.00
		735040146	Aspirator (Precleaner) Kit	14 LB		$317.00
		735045046	Foot Control Conversion Kit	52 LB		$615.00
		735045086	Foot Control Conversion Kit To be used on units built after serial NFM418327	55 LB		$700.00
		735046066	Hand Control Conversion Kit	76 LB		$824.00
		735047006	120V Block Heater Kit	6 LB		$206.00
		735142006	Cylinder Guard Kit	21 LB		$739.00
		735178026	Rediator Debris Kit	10 LB		$333.00

Dirt & Foundry Bucket

		735055016	72" Dirt & Foundry Bucket (1829 mm), 16.2 cu. ft. Heaped Capacity	407 LB		$1,000.00
		735056016	78" Dirt & Foundry Bucket (1981 mm), 17.7 cu. ft. Heaped Capacity	429 LB		$1,038.00

Low Profile Bucket

		735059016	72" Low Profile Bucket (1829 mm), 14.8 cu. ft. Heaped Capacity	471 LB		$903.00

Low Profile Extended Bucket

		735062016	72" Low Profile Extended Bucket (1829 mm), 17.7 cu. ft. Heaped Capacity	504 LB		$1,004.00
		735063016	78" Low Profile Extended Bucket (1981 mm), 19.1 cu. ft. Heaped Capacity	531 LB		$1,086.00
		735064016	84" Low Profile Extended Bucket (2134 mm), 20.5 cu. ft. Heaped Capacity	607 LB		$1,173.00

Light Material Bucket

		735066016	72" Light Material Bucket (1829 mm), 23.3 cu. ft. Heaped Capacity	466 LB		$841.00
		735067016	84" Light Material Bucket (2134 mm), 27.5 cu. ft. Heaped Capacity	532 LB		$981.00

Manure & Slurry Bucket

		735069016	72" Manure-Slurry Bucket (1829 mm), 19.1 cu. ft. Heaped Capacity	469 LB		$856.00
		735070016	84" Manure-Slurry Bucket (2134 mm), 22.6 cu. ft. Heaped Capacity	535 LB		$995.00

Heavy Duty Dirt Bucket

		735072016	72" Heavy Duty Dirt Bucket (1829 mm), 14.1 cu. ft. Heaped Capacity	501 LB		$1,409.00
		735073016	78" Heavy Duty Dirt Bucket (1981 mm), 15.5 cu. ft. Heaped Capacity	526 LB		$1,538.00
		735074016	84" Heavy Duty Dirt Bucket (2134 mm), 17.0 cu. ft. Heaped Capacity	550 LB		$1,589.00

TR340 T4 FINAL US PRICE LIST

COMMERCIAL MODEL	Weight	Factory Data	List Price
TR340 T4 FINAL.	10,000 LB		$94,441.00

TR340 T4 FINAL US PRICE LIST

Factory Supplied Options

Order Code			Description	Weight	Factory Data	List Price
CONTROLS AND TRANSMISSION						
SD_01401 DRIVE CONTROL TYPE						
		761040	Hand Controls **H-Pattern/Mechanical**			No Charge
		761041	Hand and Foot Controls **Hand (Loader Drive), Foot (Bucket and Boom)**			No Charge
		761042	E-H Controls **Electro-Hydraulic Switchable (ISO-H Pattern) Controls**			No Charge
SD_01100 CONTROLS LEVEL						
		761029	2 Speed Mechanical Controls			($2,095.00)
		761031	2 Speed E-H Controls			No Charge
ROPS/CAB						
SD_05009 CAB						
		761043	Open Cab (No Heat or HVAC) **with top window and keyed start**			($5,320.00)
		761045	Enclosed Cab with HVAC **Includes side windows, front glass door with wiper, shoulder belt, radio with speakers and keyless start**			No Charge
		761183	Enclosed Cab w/HVAC -Demo Door **Includes side windows, 1/2" polycarbonate front glass door with wiper, shoulder belt, radio with speakers and keyless start**			$1,781.00
SD_05016 OPEN CAB TRIM						
		X05016X	No Open Cab Interior Trim Pkg			No Charge
SD_05185 CAB SEAT						
		761052	Suspension Seat (Vinyl)			($582.00)
		761062	Air Ride Suspension Seat **(Fabric) with temperature control** **(may not be ordered with Open Cab option 761043)**			No Charge
SD_K6480 HEAVY DUTY FRONT LIGHTS						
		761201	Heavy Duty Front Lights			No Charge
COUPLER						
SD_K5101 COUPLERS						
		726003	Manual Coupler			($1,027.00)
		761206	Heavy Duty Hydraulic Coupler			No Charge
BLOCK HEATER						
SD_02086 BLOCK HEATER						
		761048	Block Heater (120V)			No Charge
OPERATOR MANUALS						
SD_32035 LANGUAGE OPTIONS						
		761085	English			No Charge
		761088	French			No Charge
		761097	Spanish			No Charge
OPTIONAL PACKAGES						
SD_01201 OPTION PACKAGES						
		761034	Front Electric/Multi-Function **Contains Front Electric (Multi-function) for Standard Auxiliaries**			No Charge
		761035	Performance w/Front Electric **Contains ON/OFF One-way Self Leveling, Ride Control, and Front Electric**			$1,173.00
		761036	High Flow Package **Contains High Flow Hydraulics with Front Electric**			$1,874.00
		761037	High Flow Plus Package **Contains Front Electric, High Flow Hydraulics, ON/OFF One-way Self Leveling and Ride Control**			$3,047.00
		761039	Enhanced High Flow Package **Only available with units equipped with EH Controls Contains 4000 PSI High Flow Hydraulics, second auxiliaries,** **front electric, high flow hydraulics, ON/OFF One-way self leveling** **and ride control**			$6,317.00

TR340 T4 FINAL US PRICE LIST						
TRACK BELT OPTIONS						
SD_10015 TRACK OPTIONS						
		8500147	450 mm (17.7 inch) **78" OW**			No Charge
		8500187	450 BELT HD			$398.00
SD_39100 HEAVY DUTY TRACK COVERS						
		761204	Undercarriage Hose Covers			No Charge
FRONT ATTACHMENTS						
BUCKETS						
SD_K5231 BUCKETS						
		761255	78" HD Ext. w/ SmartFit Teeth **1981 mm, 18.9 cu. ft. Heaped Capacity**			$1,898.00
		761256	84" HD Ext. w/ SmartFit Teeth **2134 mm, 20.5 cu. ft. Heaped Capacity**			$2,032.00
		XK5231X	No Bucket			No Charge
Dirt & Foundry Bucket						
		761126	78" Dirt & Foundry Bucket **1981 mm, 17.7 cu. ft. Heaped Capacity**			$1,038.00
Heavy Duty Dirt Bucket						
		761143	78" Heavy Duty Dirt Bucket **1981 mm, 15.5 cu. ft. Heaped Capacity**			$1,538.00
		761144	84" Heavy Duty Dirt Bucket **2134 mm, 17.0 cu. ft. Heaped Capacity**			$1,589.00
Light Material Bucket						
		761137	84" Light Material Bucket **2134 mm, 27.5 cu. ft. Heaped Capacity**			$1,047.00
Low Profile Extended Bucket						
		761133	78" Low Profile Extended **1981 mm, 19.1 cu. ft. Heaped Capacity**			$1,086.00
		761134	84" Low Profile Extended **2134 mm, 20.5 cu. ft. Heaped Capacity**			$1,173.00
Manure & Slurry Bucket						
		761140	84" Manure-Slurry Bucket **2134 mm, 22.6 cu. ft. Heaped Capacity**			$995.00
SPILL GUARDS						
SD_K5400 SPILL GUARDS						
		XK5400X	No Spill Guard			No Charge
BOLT ON CUTTING EDGES						
SD_K6399 BOLT ON CUTTING EDGE						
		XK6399X	No Bolt on Cutting Edge			No Charge
		761148	78" Bolt on Cutting Edge			$259.00
		761149	84" Bolt on Cutting Edge			$279.00
TR340 T4 FINAL US PRICE LIST						

Factory Supplied Attachments

Order Code			Description	Weight	Factory Data	List Price
		735006006	Beacon Kit	1 LB		$154.00
		735007006	4-Corner LED Strobe Kit	24 LB		$500.00
		735011006	Glass Front Door Kit Center mounted wiper Requires three point seat belt. Must order applicable harness. Reference dependency matrix.	182 LB		$1,543.00
		735012006	Demo Front Door Kit Center mounted wiper Requires three point seat belt. Must order applicable harness. Reference dependency matrix.	182 LB		$2,711.00
		735013006	Cab Side Windows Kit	139 LB		$865.00
		735016006	Radio Kit Must order applicable harness. Reference dependency matrix.	16 LB		$413.00
		735020096	Road Light Kit TR340 T4 FINAL	111 LB		$606.00
		735020116	Road Lights Kit TV380 T4 FINAL & TV450 T4 FINAL	110 LB		$910.00
		735021006	Multi-Function Front Electrical Mech Kit Must order applicable handle. Reference dependency martix.	11 LB		$274.00
		735021016	Multi-Function Front Electrical Mech Kit Must order applicable handle. Reference dependency martix.	11 LB		$274.00
		735021036	Multi-Function Front Electrical Mech Kit TR340 T4 FINAL	62 LB		$274.00
		735021046	Multi-Function Front Electrical Mech Kit TV380 T4 FINAL	8 LB		$274.00
		735022026	One Way Self Level Kit TR340 T4 FINAL	14 LB		$485.00
		735022076	One Way Self Level Kit TV380 T4 FINAL	14 LB		$485.00

TR340 T4 FINAL US PRICE LIST						
		735023006	Ride Control Kit Must order applicable handle. Reference dependency martix.	33 LB		$481.00
		735024006	Hydraulic Coupler Kit Must order applicable harness. Reference dependency matrix.	50 LB		$1,236.00
		735024016	Hydraulic Coupler Kit Must order applicable harness. Reference dependency matrix.	159 LB		$1,236.00
		735024036	Hydraulic Coupler Kit Must order applicable harness. Reference dependency matrix.	151 LB		$1,345.00
		735024046	Hydraulic Coupler Kit Must order applicable harness. Reference dependency matrix.	152 LB		$1,345.00
		735025026	High Flow Auxiliary Kit Must order applicable harness. Reference dependency matrix.	193 LB		$2,519.00
		735025036	High Flow Auxiliary Kit Must order applicable harness. Reference dependency matrix.	190 LB		$2,519.00
		735025056	High Flow Auxiliary Kit Must order applicable harness. Reference dependency matrix.	192 LB		$2,519.00
		735025066	High Flow Auxiliary Kit Must order applicable harness. Reference dependency matrix.	191 LB		$2,519.00
		735025116	High Flow Auxiliary Kit TR340 T4 FINAL	210 LB		$2,519.00
		735025126	High Flow Auxiliary Kit TV380 T4 FINAL	97 LB		$2,519.00
		735027056	Second Hydraulic Front Auxiliary Kit TV380 T4 FINAL	99 LB		$1,029.00
		735027066	Second Hydraulic Front Auxiliary Kit TR340 T4 FINAL	99 LB		$1,029.00
		735030006	Heavy Duty Rear Door Kit	32 LB		$308.00
		735036036	4-Point Lift Hook Kit	20 LB		$222.00
		735037006	Single Point Lift Hook Kit TR340 T4 FINAL	289 LB		$1,029.00
		735037046	Single Point Lift Hook Kit TV380 T4 FINAL	269 LB		$1,029.00
		735038006	FOPS Level 2 Modification Kit	61 LB		$343.00
		735039036	Extra Counterweight Kit	659 LB		$1,168.00
		735045006	Foot Control Conversion Kit	54 LB		$615.00
		735045046	Foot Control Conversion Kit	52 LB		$615.00
		735045086	Foot Control Conversion Kit	55 LB		$700.00
		735046026	Hand Control Conversion Kit	78 LB		$765.00
		735046046	Hand Control Conversion Kit	76 LB		$824.00
		735046056	Hand Control Conversion Kit	77 LB		$824.00
		735046076	Hand Control Conversion Kit	76 LB		$750.00
		735047006	120V Block Heater Kit	6 LB		$206.00
		735048006	220V Block Heater Kit	6 LB		$206.00
		735056016	78" Dirt & Foundry Bucket (1981 mm), 17.7 cu. ft. Heaped Capacity	429 LB		$1,038.00
		735063016	78" Low Profile Extended Bucket (1981 mm), 19.1 cu. ft. Heaped Capacity	531 LB		$1,086.00
		735064016	84" Low Profile Extended Bucket (2134 mm), 20.5 cu. ft. Heaped Capacity	607 LB		$1,173.00
		735067016	84" Light Material Bucket (2134 mm), 27.5 cu. ft. Heaped Capacity	532 LB		$981.00
		735070016	84" Manure-Slurry Bucket (2134 mm), 22.6 cu. ft. Heaped Capacity	535 LB		$995.00
		735073016	78" Heavy Duty Dirt Bucket (1981 mm), 15.5 cu. ft. Heaped Capacity	526 LB		$1,538.00
		735074016	84" Heavy Duty Dirt Bucket (2134 mm), 17.0 cu. ft. Heaped Capacity	550 LB		$1,589.00
		735125006	Multi-Function Front Electrical E-H Kit Must order applicable handle. Reference dependency matrix.	11 LB		$274.00
		735125016	Multi-Function Front Electrical E-H Kit Must order applicable handle. Reference dependency matrix.	11 LB		$274.00
		735125036	Multi-Function Front Electrical E-H Kit Must order applicable handle. Reference dependency matrix.	97 LB		$274.00
		735125046	Multi-Function Front Electrical E-H Kit Must order applicable handle. Reference dependency matrix.	62 LB		$274.00
		735142006	Cylinder Guard Kit	21 LB		$739.00
		735146006	Three Point Seat Belt	4 LB		$233.00
		735150006	Open Cab Interior Trim Kit For use with Open Cab. Covers interior sides and rear.	25 LB		$372.00

TR340 T4 FINAL US PRICE LIST						
		735152036	New Hood with Debris Seal Kit Contains new hood and additional sealing items Reduces debris ingression to engine compartment and chassis For use with TIER 3 models built prior to July 2012 ONLY	124 LB		$649.00
		735152056	New Hood with Debris Seal Kit Contains new hood and additional sealing items Reduces debris ingression to engine compartment and chassis For use with TIER 3 models built prior to July 2012 ONLY	109 LB		$781.00
		735158056	HVAC Complete Must order applicable harness. Reference dependency matrix.	379 LB		$2,951.00
		735158066	HVAC Complete Must order applicable harness. Reference dependency matrix.	383 LB		$2,951.00
		735158146	HVAC Complete Must order applicable harness. Reference dependency matrix.	384 LB		$2,951.00
		735158156	HVAC Complete Must order applicable harness. Reference dependency matrix.	381 LB		$2,951.00
		735158196	HVAC Complete Must order applicable harness. Reference dependency matrix.	394 LB		$2,951.00
		735158206	HVAC Complete Must order applicable harness. Reference dependency matrix.	396 LB		$2,951.00
		735159026	Heater Complete Kit Must order applicable harness. Reference dependency matrix.	137 LB		$1,374.00
		735159046	Heater Complete Kit Must order applicable harness. Reference dependency matrix.	141 LB		$1,374.00
		735159126	Heater Complete Kit Must order applicable harness. Reference dependency matrix.	135 LB		$1,374.00
		735168006	Aspirator (Precleaner) Kit TR340 T4 FINAL	39 LB		$683.00
		735168016	Aspirator (Precleaner) Kit TV380 T4 FINAL	39 LB		$683.00
		735178056	Rediator Debris Kit	10 LB		$333.00

TV370 T4 FINAL COMPACT TRACK LOADERS US PRICE LIST

COMMERCIAL MODEL	Weight	Factory Data	List Price
TV370 T4 FINAL	9,300 LB		$78,767.00

TV370 T4 FINAL COMPACT TRACK LOADERS US PRICE LIST

Factory Supplied Options

Order Code			Description	Weight	Factory Data	List Price
CONTROLS AND TRANSMISSION						
SD_01401 DRIVE CONTROL TYPE						
		761040	Hand Controls **H-Pattern/Mechanical**			No Charge
		761041	Hand and Foot Controls **Hand (Loader Drive), Foot (Bucket and Boom)**			No Charge
		761042	E-H Controls **Electro-Hydraulic Switchable (ISO-H Pattern) Controls**			No Charge
SD_01100 CONTROLS LEVEL						
		761029	2 Speed Mechanical Controls			($2,095.00)
		761031	2 Speed E-H Controls			No Charge
ROPS/CAB						
SD_05009 CAB						
		761043	Open Cab (No Heat or HVAC) **with top window and keyed start**			No Charge
		761045	Enclosed Cab with HVAC **Includes side windows, front glass door with wiper, shoulder belt, radio with speakers and keyless start**			$5,664.00
		761183	Enclosed Cab w/HVAC -Demo Door **Includes side windows, 1/2" polycarbonate front glass door with wiper, shoulder belt, radio with speakers and keyless start**			$7,445.00
SD_05016 OPEN CAB TRIM						
		X05016X	No Open Cab Interior Trim Pkg			No Charge
SD_05185 CAB SEAT						
		761052	Suspension Seat (Vinyl)			No Charge
		761062	Air Ride Suspension Seat **(Fabric) with temperature control** **(may not be ordered with Open Cab option 761043)**			$601.00
SD_K6480 HEAVY DUTY FRONT LIGHTS						
		761201	Heavy Duty Front Lights			No Charge
REAR DOOR						
SD_39021 REAR DOOR						
		761205	Heavy Duty Rear Door			No Charge
COUPLER						
SD_K5101 COUPLERS						
		726003	Manual Coupler			($1,027.00)
		761206	Heavy Duty Hydraulic Coupler			No Charge
BLOCK HEATER						
SD_02086 BLOCK HEATER						
		761048	Block Heater (120V)			No Charge
OPERATOR MANUALS						
SD_32035 LANGUAGE OPTIONS						
		761085	English			No Charge
		761088	French			No Charge
		761097	Spanish			No Charge
OPTIONAL PACKAGES						
SD_01201 OPTION PACKAGES						
		761034	Front Electric/Multi-Function **Contains Front Electric (Multi-function) for Standard Auxiliaries**			No Charge
		761035	Performance w/Front Electric **Contains ON/OFF One-way Self Leveling, Ride Control, and Front Electric**			$1,173.00
		761036	High Flow Package **Contains High Flow Hydraulics with Front Electric**			$1,874.00
		761037	High Flow Plus Package **Contains Front Electric, High Flow Hydraulics, ON/OFF One-way Self Leveling and Ride Control**			$3,047.00
TRACK BELT OPTIONS						
SD_10015 TRACK OPTIONS						
		8500147	450 mm (17.7 inch) **78" OW**			No Charge
		8500187	450 BELT HD			$398.00
SD_39100 HEAVY DUTY TRACK COVERS						
		761204	Undercarriage Hose Covers			No Charge

TV370 T4 FINAL COMPACT TRACK LOADERS US PRICE LIST

FRONT ATTACHMENTS						
BUCKETS						
SD_K5231 BUCKETS						
		761255	78" HD Ext. w/ SmartFit Teeth **1981 mm, 18.9 cu. ft. Heaped Capacity**			$1,898.00
		761256	84" HD Ext. w/ SmartFit Teeth **2134 mm, 20.5 cu. ft. Heaped Capacity**			$2,032.00
		XK5231X	No Bucket			No Charge
Dirt & Foundry Bucket						
		761126	78" Dirt & Foundry Bucket **1981 mm, 17.7 cu. ft. Heaped Capacity**			$1,038.00
Heavy Duty Dirt Bucket						
		761143	78" Heavy Duty Dirt Bucket **1981 mm, 15.5 cu. ft. Heaped Capacity**			$1,538.00
		761144	84" Heavy Duty Dirt Bucket **2134 mm, 17.0 cu. ft. Heaped Capacity**			$1,589.00
Light Material Bucket						
		761137	84" Light Material Bucket **2134 mm, 27.5 cu. ft. Heaped Capacity**			$1,047.00
Low Profile Extended Bucket						
		761133	78" Low Profile Extended **1981 mm, 19.1 cu. ft. Heaped Capacity**			$1,086.00
		761134	84" Low Profile Extended **2134 mm, 20.5 cu. ft. Heaped Capacity**			$1,173.00
Manure & Slurry Bucket						
		761140	84" Manure-Slurry Bucket **2134 mm, 22.6 cu. ft. Heaped Capacity**			$995.00
SPILL GUARDS						
SD_K5400 SPILL GUARDS						
		XK5400X	No Spill Guard			No Charge
BOLT ON CUTTING EDGES						
SD_K6399 BOLT ON CUTTING EDGE						
		XK6399X	No Bolt on Cutting Edge			No Charge
		761148	78" Bolt on Cutting Edge			$259.00
		761149	84" Bolt on Cutting Edge			$279.00

TV370 T4 FINAL COMPACT TRACK LOADERS US PRICE LIST

Factory Supplied Attachments

Order Code			Description	Weight	Factory Data	List Price
Basic Attachments						
		735006006	Beacon Kit	1 LB		$154.00
		735007006	4-Corner LED Strobe Kit	24 LB		$500.00
		735159046	Heater Complete Kit Reference dependency matrix.	141 LB		$1,374.00
		735158156	HVAC Complete Must order applicable harness. Reference dependency matrix.	381 LB		$2,951.00
		735146006	Three Point Seat Belt	4 LB		$233.00
		735011006	Glass Front Door Kit Center mounted wiper Requires three point seat belt. Must order applicable harness. Reference dependency matrix.	182 LB		$1,543.00
		735012006	Demo Front Door Kit Center mounted wiper Requires three point seat belt. Must order applicable harness. Reference dependency matrix.	182 LB		$2,711.00
		735013006	Cab Side Windows Kit	139 LB		$865.00
		735016006	Radio Kit Must order applicable harness. Reference dependency matrix.	16 LB		$413.00
		735150006	Open Cab Interior Trim Kit For use with Open Cab. Covers interior sides and rear.	25 LB		$372.00
		735021016	Multi-Function Front Electrical Mech Kit Must order applicable handle. Reference dependency martix.	11 LB		$274.00
		735125016	Multi-Function Front Electrical E-H Kit Must order applicable handle. Reference dependency matrix.	11 LB		$274.00
		735023006	Ride Control Kit Must order applicable handle. Reference dependency martix.	33 LB		$481.00
		735024046	Hydraulic Coupler Kit Must order applicable harness. Reference dependency matrix.	152 LB		$1,345.00
		735025066	High Flow Auxiliary Kit Must order applicable harness. Reference dependency matrix.	191 LB		$2,519.00
		735027056	Second Hydraulic Front Auxiliary Kit Must order applicable handle. Reference dependency matrix.	99 LB		$1,029.00
		735037046	Single Point Lift Hook Kit	269 LB		$1,029.00
		735038006	FOPS Level 2 Modification Kit	61 LB		$343.00
		735039036	Extra Counterweight Kit	659 LB		$1,168.00

TV370 T4 FINAL COMPACT TRACK LOADERS US PRICE LIST						
		735045046	Foot Control Conversion Kit	52 LB		$615.00
		735046046	Hand Control Conversion Kit	76 LB		$824.00
		735047006	120V Block Heater Kit	6 LB		$206.00
		735142006	Cylinder Guard Kit	21 LB		$739.00
		735022066	One Way Self Level Kit	14 LB		$485.00
		735040136	Aspirator Kit	14 LB		$317.00
		735178036	Radiator Debris Kit	10 LB		$333.00
Dirt & Foundry Bucket						
		735056016	78" Dirt & Foundry Bucket (1981 mm), 17.7 cu. ft. Heaped Capacity	429 LB		$1,038.00
Low Profile Extended Bucket						
		735063016	78" Low Profile Extended Bucket (1981 mm), 19.1 cu. ft. Heaped Capacity	531 LB		$1,086.00
		735064016	84" Low Profile Extended Bucket (2134 mm), 20.5 cu. ft. Heaped Capacity	607 LB		$1,173.00
Light Material Bucket						
		735067016	84" Light Material Bucket (2134 mm), 27.5 cu. ft. Heaped Capacity	532 LB		$981.00
Manure & Slurry Bucket						
		735070016	84" Manure-Slurry Bucket (2134 mm), 22.6 cu. ft. Heaped Capacity	535 LB		$995.00
Heavy Duty Dirt Bucket						
		735073016	78" Heavy Duty Dirt Bucket (1981 mm), 15.5 cu. ft. Heaped Capacity	526 LB		$1,538.00
		735074016	84" Heavy Duty Dirt Bucket (2134 mm), 17.0 cu. ft. Heaped Capacity	550 LB		$1,589.00
		735020116	Road Lights Kit	110 LB		$910.00
		735036046	4-Point Lift Hook Kit	22 LB		$238.00

TV450 T4 FINAL US PRICE LIST

COMMERCIAL MODEL	Weight	Factory Data	List Price
TV450 T4 FINAL.	10,000 LB		$99,271.00

TV450 T4 FINAL US PRICE LIST

Factory Supplied Options

Order Code			Description	Weight	Factory Data	List Price
CONTROLS AND TRANSMISSION						
SD_01401 DRIVE CONTROL TYPE						
		761040	Hand Controls **H-Pattern/Mechanical**			No Charge
		761041	Hand and Foot Controls **Hand (Loader Drive), Foot (Bucket and Boom)**			No Charge
		761042	E-H Controls **Electro-Hydraulic Switchable (ISO-H Pattern) Controls**			No Charge
SD_01100 CONTROLS LEVEL						
		761029	2 Speed Mechanical Controls			($2,095.00)
		761031	2 Speed E-H Controls			No Charge
ROPS/CAB						
SD_05009 CAB						
		761043	Open Cab (No Heat or HVAC) **with top window and keyed start**			($5,320.00)
		761045	Enclosed Cab with HVAC **Includes side windows, front glass door with wiper, shoulder belt, radio with speakers and keyless start**			No Charge
		761183	Enclosed Cab w/HVAC -Demo Door **Includes side windows, 1/2" polycarbonate front glass door with wiper, shoulder belt, radio with speakers and keyless start**			$1,781.00
SD_05016 OPEN CAB TRIM						
		X05016X	No Open Cab Interior Trim Pkg			No Charge
SD_05185 CAB SEAT						
		761052	Suspension Seat (Vinyl)			($582.00)
		761062	Air Ride Suspension Seat **(Fabric) with temperature control** **(may not be ordered with Open Cab option 761043)**			No Charge
SD_K6480 HEAVY DUTY FRONT LIGHTS						
		761201	Heavy Duty Front Lights			No Charge
COUPLER						
SD_K5101 COUPLERS						
		726003	Manual Coupler			($1,027.00)
		761206	Heavy Duty Hydraulic Coupler			No Charge
BLOCK HEATER						
SD_02086 BLOCK HEATER						
		761048	Block Heater (120V)			No Charge
OPERATOR MANUALS						
SD_32035 LANGUAGE OPTIONS						
		761085	English			No Charge
		761088	French			No Charge
		761097	Spanish			No Charge
OPTIONAL PACKAGES						
SD_01201 OPTION PACKAGES						
		761034	Front Electric/Multi-Function **Contains Front Electric (Multi-function) for Standard Auxiliaries**			No Charge
		761035	Performance w/Front Electric **Contains ON/OFF One-way Self Leveling, Ride Control, and Front Electric**			$1,173.00
		761036	High Flow Package **Contains High Flow Hydraulics with Front Electric**			$1,874.00
		761037	High Flow Plus Package **Contains Front Electric, High Flow Hydraulics, ON/OFF One-way Self Leveling and Ride Control**			$3,047.00
		761039	Enhanced High Flow Package **Only available with units equipped with EH Controls Contains 4000 PSI High Flow Hydraulics, second auxiliaries,** **front electric, high flow hydraulics, ON/OFF One-way self leveling** **and ride control**			$6,317.00

TV450 T4 FINAL US PRICE LIST						
TRACK BELT OPTIONS						
SD_10015 TRACK OPTIONS						
		8500147	450 mm (17.7 inch) **78" OW**			No Charge
		8500187	450 BELT HD			$398.00
SD_39100 HEAVY DUTY TRACK COVERS						
		761204	Undercarriage Hose Covers			No Charge
FRONT ATTACHMENTS						
BUCKETS						
SD_K5231 BUCKETS						
		761255	78" HD Ext. w/ SmartFit Teeth **1981 mm, 18.9 cu. ft. Heaped Capacity**			$1,898.00
		761256	84" HD Ext. w/ SmartFit Teeth **2134 mm, 20.5 cu. ft. Heaped Capacity**			$2,032.00
		XK5231X	No Bucket			No Charge
Dirt & Foundry Bucket						
		761126	78" Dirt & Foundry Bucket **1981 mm, 17.7 cu. ft. Heaped Capacity**			$1,038.00
Heavy Duty Dirt Bucket						
		761143	78" Heavy Duty Dirt Bucket **1981 mm, 15.5 cu. ft. Heaped Capacity**			$1,538.00
		761144	84" Heavy Duty Dirt Bucket **2134 mm, 17.0 cu. ft. Heaped Capacity**			$1,589.00
Light Material Bucket						
		761137	84" Light Material Bucket **2134 mm, 27.5 cu. ft. Heaped Capacity**			$1,047.00
Low Profile Extended Bucket						
		761133	78" Low Profile Extended **1981 mm, 19.1 cu. ft. Heaped Capacity**			$1,086.00
		761134	84" Low Profile Extended **2134 mm, 20.5 cu. ft. Heaped Capacity**			$1,173.00
Manure & Slurry Bucket						
		761140	84" Manure-Slurry Bucket **2134 mm, 22.6 cu. ft. Heaped Capacity**			$995.00
SPILL GUARDS						
SD_K5400 SPILL GUARDS						
		XK5400X	No Spill Guard			No Charge
BOLT ON CUTTING EDGES						
SD_K6399 BOLT ON CUTTING EDGE						
		XK6399X	No Bolt on Cutting Edge			No Charge
		761148	78" Bolt on Cutting Edge			$259.00
		761149	84" Bolt on Cutting Edge			$279.00
TV450 T4 FINAL US PRICE LIST						

Factory Supplied Attachments

Order Code			Description	Weight	Factory Data	List Price
		735006006	Beacon Kit	1 LB		$154.00
		735007006	4-Corner LED Strobe Kit	24 LB		$500.00
		735011006	Glass Front Door Kit Center mounted wiper Requires three point seat belt. Must order applicable harness. Reference dependency matrix.	182 LB		$1,543.00
		735012006	Demo Front Door Kit Center mounted wiper Requires three point seat belt. Must order applicable harness. Reference dependency matrix.	182 LB		$2,711.00
		735013006	Cab Side Windows Kit	139 LB		$865.00
		735016006	Radio Kit Must order applicable harness. Reference dependency matrix.	16 LB		$413.00
		735020096	Road Light Kit TR340 T4 FINAL	111 LB		$606.00
		735020116	Road Lights Kit TV380 T4 FINAL & TV450 T4 FINAL	110 LB		$910.00
		735021006	Multi-Function Front Electrical Mech Kit Must order applicable handle. Reference dependency martix.	11 LB		$274.00
		735021016	Multi-Function Front Electrical Mech Kit Must order applicable handle. Reference dependency martix.	11 LB		$274.00
		735021036	Multi-Function Front Electrical Mech Kit TR340 T4 FINAL	62 LB		$274.00
		735021046	Multi-Function Front Electrical Mech Kit TV380 T4 FINAL	8 LB		$274.00
		735022026	One Way Self Level Kit TR340 T4 FINAL	14 LB		$485.00
		735022076	One Way Self Level Kit TV380 T4 FINAL	14 LB		$485.00
		735023006	Ride Control Kit Must order applicable handle. Reference dependency martix.	33 LB		$481.00

TV450 T4 FINAL US PRICE LIST						
		735024006	Hydraulic Coupler Kit Must order applicable harness. Reference dependency matrix.	50 LB		$1,236.00
		735024016	Hydraulic Coupler Kit Must order applicable harness. Reference dependency matrix.	159 LB		$1,236.00
		735024036	Hydraulic Coupler Kit Must order applicable harness. Reference dependency matrix.	151 LB		$1,345.00
		735024046	Hydraulic Coupler Kit Must order applicable harness. Reference dependency matrix.	152 LB		$1,345.00
		735025026	High Flow Auxiliary Kit Must order applicable harness. Reference dependency matrix.	193 LB		$2,519.00
		735025036	High Flow Auxiliary Kit Must order applicable harness. Reference dependency matrix.	190 LB		$2,519.00
		735025056	High Flow Auxiliary Kit Must order applicable harness. Reference dependency matrix.	192 LB		$2,519.00
		735025066	High Flow Auxiliary Kit Must order applicable harness. Reference dependency matrix.	191 LB		$2,519.00
		735025116	High Flow Auxiliary Kit TR340 T4 FINAL	210 LB		$2,519.00
		735025126	High Flow Auxiliary Kit TV380 T4 FINAL	97 LB		$2,519.00
		735027056	Second Hydraulic Front Auxiliary Kit TV380 T4 FINAL	99 LB		$1,029.00
		735027066	Second Hydraulic Front Auxiliary Kit TR340 T4 FINAL	99 LB		$1,029.00
		735030006	Heavy Duty Rear Door Kit	32 LB		$308.00
		735036036	4-Point Lift Hook Kit	20 LB		$222.00
		735037006	Single Point Lift Hook Kit TR340 T4 FINAL	289 LB		$1,029.00
		735037046	Single Point Lift Hook Kit TV380 T4 FINAL	269 LB		$1,029.00
		735038006	FOPS Level 2 Modification Kit	61 LB		$343.00
		735039036	Extra Counterweight Kit	659 LB		$1,168.00
		735045006	Foot Control Conversion Kit	54 LB		$615.00
		735045046	Foot Control Conversion Kit	52 LB		$615.00
		735045086	Foot Control Conversion Kit	55 LB		$700.00
		735046026	Hand Control Conversion Kit	78 LB		$765.00
		735046046	Hand Control Conversion Kit	76 LB		$824.00
		735046056	Hand Control Conversion Kit	77 LB		$824.00
		735046076	Hand Control Conversion Kit	76 LB		$750.00
		735047006	120V Block Heater Kit	6 LB		$206.00
		735056016	78" Dirt & Foundry Bucket (1981 mm), 17.7 cu. ft. Heaped Capacity	429 LB		$1,038.00
		735063016	78" Low Profile Extended Bucket (1981 mm), 19.1 cu. ft. Heaped Capacity	531 LB		$1,086.00
		735064016	84" Low Profile Extended Bucket (2134 mm), 20.5 cu. ft. Heaped Capacity	607 LB		$1,173.00
		735067016	84" Light Material Bucket (2134 mm), 27.5 cu. ft. Heaped Capacity	532 LB		$981.00
		735070016	84" Manure-Slurry Bucket (2134 mm), 22.6 cu. ft. Heaped Capacity	535 LB		$995.00
		735073016	78" Heavy Duty Dirt Bucket (1981 mm), 15.5 cu. ft. Heaped Capacity	526 LB		$1,538.00
		735074016	84" Heavy Duty Dirt Bucket (2134 mm), 17.0 cu. ft. Heaped Capacity	550 LB		$1,589.00
		735125006	Multi-Function Front Electrical E-H Kit Must order applicable handle. Reference dependency matrix.	11 LB		$274.00
		735125016	Multi-Function Front Electrical E-H Kit Must order applicable handle. Reference dependency matrix.	11 LB		$274.00
		735125036	Multi-Function Front Electrical E-H Kit Must order applicable handle. Reference dependency matrix.	97 LB		$274.00
		735125046	Multi-Function Front Electrical E-H Kit Must order applicable handle. Reference dependency matrix.	62 LB		$274.00
		735142006	Cylinder Guard Kit	21 LB		$739.00
		735146006	Three Point Seat Belt	4 LB		$233.00
		735150006	Open Cab Interior Trim Kit For use with Open Cab. Covers interior sides and rear.	25 LB		$372.00
		735152036	New Hood with Debris Seal Kit Contains new hood and additional sealing items Reduces debris ingression to engine compartment and chassis For use with TIER 3 models built prior to July 2012 ONLY	124 LB		$649.00

TV450 T4 FINAL US PRICE LIST						
		735152056	New Hood with Debris Seal Kit Contains new hood and additional sealing items Reduces debris ingression to engine compartment and chassis For use with TIER 3 models built prior to July 2012 ONLY	109 LB		$781.00
		735158056	HVAC Complete Must order applicable harness. Reference dependency matrix.	379 LB		$2,951.00
		735158066	HVAC Complete Must order applicable harness. Reference dependency matrix.	383 LB		$2,951.00
		735158146	HVAC Complete Must order applicable harness. Reference dependency matrix.	384 LB		$2,951.00
		735158156	HVAC Complete Must order applicable harness. Reference dependency matrix.	381 LB		$2,951.00
		735158196	HVAC Complete Must order applicable harness. Reference dependency matrix.	394 LB		$2,951.00
		735158206	HVAC Complete Must order applicable harness. Reference dependency matrix.	396 LB		$2,951.00
		735159026	Heater Complete Kit Must order applicable harness. Reference dependency matrix.	137 LB		$1,374.00
		735159046	Heater Complete Kit Must order applicable harness. Reference dependency matrix.	141 LB		$1,374.00
		735159126	Heater Complete Kit Must order applicable harness. Reference dependency matrix.	135 LB		$1,374.00
		735168006	Aspirator (Precleaner) Kit TR340 T4 FINAL	39 LB		$683.00
		735168016	Aspirator (Precleaner) Kit TV380 T4 FINAL	39 LB		$683.00
		735178056	Rediator Debris Kit	10 LB		$333.00

Index

SKID STEER LOADERS/COMPACT TRACK LOADERS

Adapter SS-2
Auger SS-3-5
Auto Rake SS-6
Backhoe SS-7
Backhoe Options & Accessories SS-8-10
Backhoe Specifications SS-11
Bale Handler SS-12
Bale Spear SS-13
Broom, Angle SS-14
Broom, Hopper SS-15
Broom, Pick-Up – Standard and VS Vacuum SS-16
Bucket, 4X1 (Utility) SS-17
Bucket, 4X1 (Construction) SS-18
Bucket, Power Side Discharge SS-19
Chipper SS-20
Cold Planer, High Flow SS-21-22
Cold Planer, Standard Flow SS-23
Cold Planer – Specifications SS-24
Cold Planer – LT Series SS-25-26
Concrete Bucket SS-27
Concrete Claw SS-28
Dozer Blade SS-29
Grading Box, Laser SS-30-31
Grapple, Brush Construction SS-32-33
Grapple, Brush Utility SS-34-35
Grapple, Farm SS-36
Grapple, Large Capacity SS-37
Grapple, Log SS-38
Grapple, Scrap Construction SS-39-40
Grapple, Scrap Utility SS-41
Harley Power Box Rake® SS-42
Hydraulic Hammer SS-43-44
Lift Boom SS-45
Load Monitor SS-46
Manure Fork & Manure Fork w/Grapple SS-47
Manure Scraper SS-48
Mulcher SS-49-50
Pallet Fork SS-51-52
Pallet/Nursery Fork – Hydraulic SS-53
Post Driver SS-54
Preparator® Landscape Rake SS-55-56
Rear Stabilizer SS-57
Rock Bucket SS-58
Rock Saw SS-59-60
Root Rake SS-61
Rotary Cutter SS-62
Rotary Cutter - Extreme SS-63
Silage Defacer SS-64
Silt Fence Installer SS-65
Skid Hoe SS-66
Snow Blade (Standard Duty) SS-67
Snow Blade (Heavy Duty) SS-68
Snow Blade/Pusher (Hydraulic) SS-69-70
Snow Blade, Trip Edge SS-71
Snow Blower, High Flow SS-72-73
Snow Blower, Standard Flow SS-74
Snow Bucket SS-75
Snow Push SS-76
Snow Push – Sectional SS-77
Snow V-Blade SS-78-79
Stump Grinder SS-80-81
Three-Point Hitch SS-82
Tree Puller SS-83
Tiller SS-84
Tilt-Attach SS-85
Tracks, Steel SS-86
Tree Shovel SS-87
Tree Spade SS-88-89
Trencher SS-90-92
Vibratory Roller (Padfoot Drum) SS-93
Vibratory Roller (Smooth Drum) SS-94
Water Kit SS-95

Adapter

SKID STEER LOADERS/COMPACT TRACK LOADERS

	PART NUMBER	WEIGHT LB
ADAPTER, SSL ATTACHMENT BLANK, Standard Duty	84397477	75
ADAPTER, SSL ATTACHMENT BLANK, Heavy Duty	84397478	123

MODEL COMPATIBILITY	SR130 SR150 SR160	SR175 SV185	SR200 SR210	SR220 SR240		SV250 SR250 SR270 SV280	SV300 SV340		TR270	TR310		TR320 TR340 TV370 TV380 TV450
	410	420	430	440	435	445 450	465	420CT		440CT	445CT 450CT	
ADAPTER PLATE - STD	•	•	•									
ADAPTER PLATE - HD	•	•	•	•	•	•	•	•	•	•	•	•

FEATURES

- Std Duty - 1/4" steel construction
- Heavy Duty - 3/8" steel construction with reinforced upper hitch bar

APPLICATIONS

- Used to adapt special attachments to skid steer coupler

Standard Duty

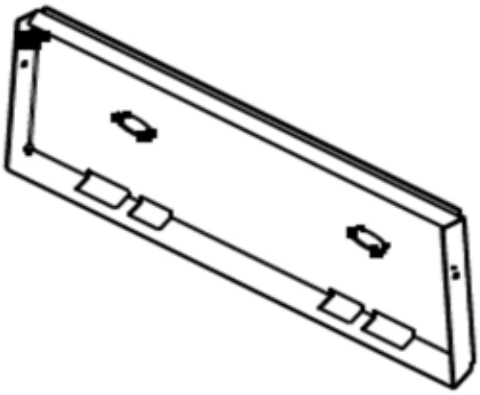

Heavy Duty

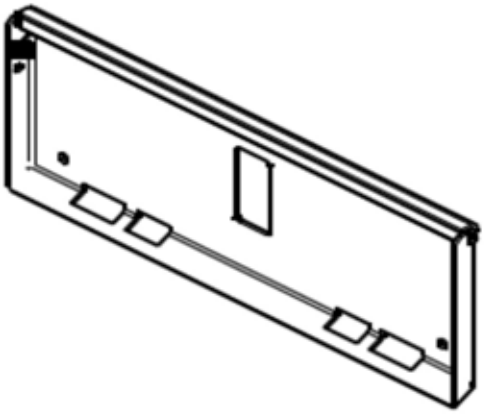

Unit includes mounting bracket, auger drive head, hoses and quick disconnects. Must order bit for complete unit.

	PART NUMBER	WEIGHT LB
X1475R256 DRIVE UNIT, 2-9/16" round output shaft	87042591	457
X1475H200 DRIVE UNIT, 2" hex output shaft	87042592	457
X1975R256 DRIVE UNIT, 2-9/16" round output shaft	87042593	457
X1975H200 DRIVE UNIT, 2" hex output shaft	87042594	457
X2475H200 DRIVE UNIT, 2" hex output shaft	47898620	457
X5075H200 DRIVE UNIT, 2" hex output shaft (high flow auxiliary hydraulics and case drain required)	87488593	586

MODEL COMPATIBILITY	SR130 SR150 SR160	410	SR175 SV185	SR200 SR210	430 440	SR220 SR240	435 445	SV250 SR250 SR270 SV280	450 465	SV300 SV340	420CT	TR270	TR310	440CT	445CT 450CT	TR320 TR340 TV370 TV380 TV450	REQ'D EQUIPMENT					
																	STD FLOW	HIGH FLOW	CASE DRAIN	FRONT ELEC	DEMO DOOR	2ND AUX
AUGER DRIVE, X1475 (10-25)	•	•	•	•	•	•	•	•	•	•	•	•	•	•	•	R						
AUGER DRIVE, X1975 (15-30)		•	•	•	•	•	•	•	•	•	•	•	•	•	•	R						
AUGER DRIVE, X2475 (20-35)				•	•	•	•	•	•	•		•	•	•	•	R	*					
AUGER DRIVE, X5075 (28-40)			•	•	•	•	•	•	•	•	•	•	•	•	•		R	R				

* X2475 may be operated as high flow up to 35 gpm

	SPECIFICATIONS			
Auger Model	X1475	X1975	X2475	X5075
Flow (gpm)	10 - 25	15 - 30	20 - 35	28 - 40
RPM @ max flow	96	100	73	85
Max Torque @ max flow and pressure (ft-lb)	2377	2769	3451	5069
Gear Reduction	3.8:1	3.8:1	3.8:1	6.1:1
	Planetary Gearbox	Planetary Gearbox	Planetary Gearbox	Planetary Gearbox
Max auger diameter	30"	36"	36"	36"
Output shaft	2-9/16" Rd	2-9/16" Rd	2" Hex	2" Hex
	2" Hex	2" Hex		
Warranty - Gearbox	5 Years	5 Years	5 Years	5 Years
Warranty - Other, (non-wear)	1 Year	1 Year	1 Year	1 Year

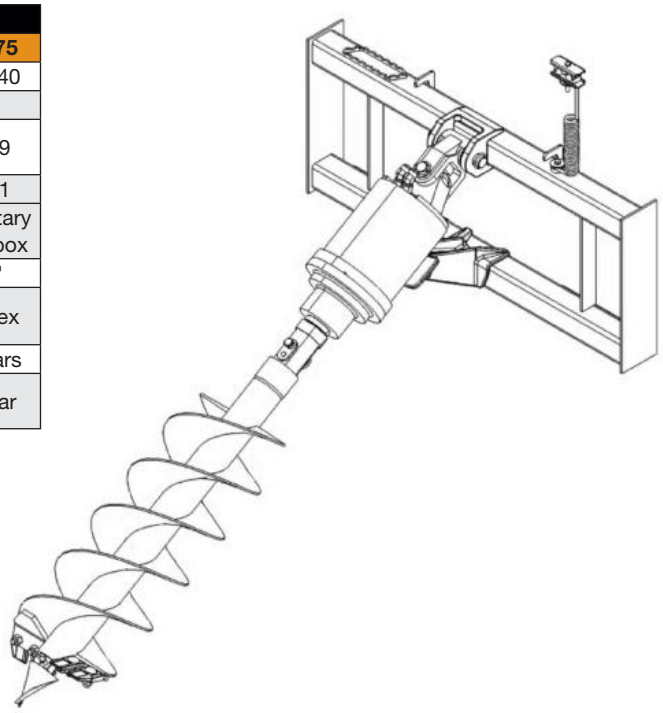

Auger Options (Continued next page)

AUGER OPTIONS

HDF STYLE AUGERS 2-9/16" Round Coupler	PART NUMBER	WEIGHT LB
6" X 4' Auger	9863606	40
9" X 4' Auger	9863607	86
12" X 4' Auger	9863608	115
15" X 4' Auger	9863609	136
18" X 4' Auger	9863610	176
24" X 4' Auger	9863611	278
30" X 4' Auger	9863612	325
36" X 4' Auger	9863613	443

HDF STYLE AUGERS 2" Hex Coupler	PART NUMBER	WEIGHT LB
6" X 4' Auger	9863626	40
9" X 4' Auger	9863627	86
12" X 4' Auger	9863628	115
15" X 4' Auger	9863629	136
18" X 4' Auger	9863630	176
24" X 4' Auger	9863631	278
30" X 4' Auger	9863632	325
36" X 4' Auger	9863633	443

HDF STYLE AUGERS

For light to moderate ground conditions

- Fabricated boring head
- Hardened bolt-on teeth
- Hardened “fishtail” point
- Heavy-duty double flighting
- 4' overall length

HDC STYLE AUGERS 2-9/16" Round Coupler	PART NUMBER	WEIGHT LB
6" X 4' Auger	9863614	45
9" X 4' Auger	9863615	98
12" X 4' Auger	9863616	128
15" X 4' Auger	9863617	139
18" X 4' Auger	9863618	204
24" X 4' Auger	9863619	272
30" X 4' Auger	9863620	312
36" X 4' Auger	9863621	430

HDC STYLE AUGERS 2" Hex Coupler	PART NUMBER	WEIGHT LB
6" X 4' Auger	9863634	45
9" X 4' Auger	9863635	98
12" X 4' Auger	9863636	128
15" X 4' Auger	9863637	139
18" X 4' Auger	9863638	204
24" X 4' Auger	9863639	272
30" X 4' Auger	9863640	312
36" X 4' Auger	9863641	430

HDC STYLE AUGERS

For difficult gound conditions, compacted soils, heavy clay, asphalt, frozen ground fracturable rock

- HD cast boring head
- Hardened, drive-in teeth
- Hardened “fishtail” point
- Heavy-duty double flighting
- 4' overall length

Auger extensions and adapters (Continued next page)

HTF STYLE AUGERS 2-9/16" Round Coupler	PART NUMBER	WEIGHT LB
18" X 4' Auger	9863622	144
24" X 4' Auger	9863623	198
30" X 4' Auger	9863624	264
36" X 4' Auger	9863625	349

HTF STYLE AUGERS 2" Hex Coupler	PART NUMBER	WEIGHT LB
18" X 4' Auger	9863642	144
24" X 4' Auger	9863643	198
30" X 4' Auger	9863644	264
36" X 4' Auger	9863645	349

HTF STYLE AUGERS

For tree and shrub planting

- Fabricated boring head
- Two-diameter design
- Hardened, bolt-on teeth
- Hardened “fishtail” point
- HD double flighting
- 4' overall length

SRR ROCK AUGERS 2" Hex Coupler	PART NUMBER	WEIGHT LB
6" X 4’ Rock Auger	47904378	82
9" X 4’ Rock Auger	47904381	110
12" X 4’ Rock Auger	47904382	137
16" X 4’ Rock Auger	47904383	171
18" X 4’ Rock Auger	47904384	192
20" X 4’ Rock Auger	47904385	239
24" X 4’ Rock Auger	47904386	285
30" X 4’ Rock Auger	47904387	315
36" X 4’ Rock Auger	47904388	414

SRR Rock Augers

For solid, fracturable rock,
frozen ground and compacted soils

- Bullet style teeth
- Fabricated boring head
- HD single flighting
- 2" hexagon collar only
- .75" thick bottom flight and a hardface outer edge
- 4' overall length

AUGER EXTENSIONS AND ADAPTERS	PART NUMBER	WEIGHT LB
2" hex female to 2-9/16" round male	9863646	16
2-9/16" round female to 2" hex male	9863647	15
2" hex female to 2" round male	87042596	10
2-9/16" round female to 2" round male	87042597	12
12" extension, 2-9/16" round	87042598	21
24" extension, 2-9/16" round	87042600	39
12" extension, 2" hex	87042601	20
24" extension, 2" hex	87042602	32
48" extension, 2" hex	84514060	57

Auto Rake

SKID STEER LOADERS/COMPACT TRACK LOADERS

Unit includes mounting plate, hoses and quick couplers.

	PART NUMBER	WEIGHT LB
AUTO RAKE, 66"	279530A1	1092
AUTO RAKE, 76"	251357A1	1200

MODEL COMPATIBILITY	SR130 SR150 SR160	SR175 SV185		SR200 SR210	SR220 SR240		SV250 SR250 SR270 SV280	SV300 SV340		TR270	TR310		TR320 TR340 TV370 TV380 TV450	REQ'D EQUIPMENT					
	410 420		430		440	435	445 450	465	420CT		440CT	445CT 450CT		STD FLOW	HIGH FLOW	CASE DRAIN	FRONT ELEC	DEMO DOOR	2ND AUX
AUTO RAKE, 66"	•	•	•	•	•	•			•	•				R					
AUTO RAKE, 76"		•	•	•	•	•	•	•	•	•	•	•	•	R					

FEATURES

- Grooms and finishes soil for seeding and sodding
- Picks up rocks from 3/4" to 6" in diameter and collects them in the hopper
- Breaks up clods and levels soil
- Easy to dump collected debris, simply raise the loader boom and open the shroud hydraulically

REQUIREMENTS FOR OPERATION

- Standard auxiliary hydraulics
- Rear counterweight on 1800 Series

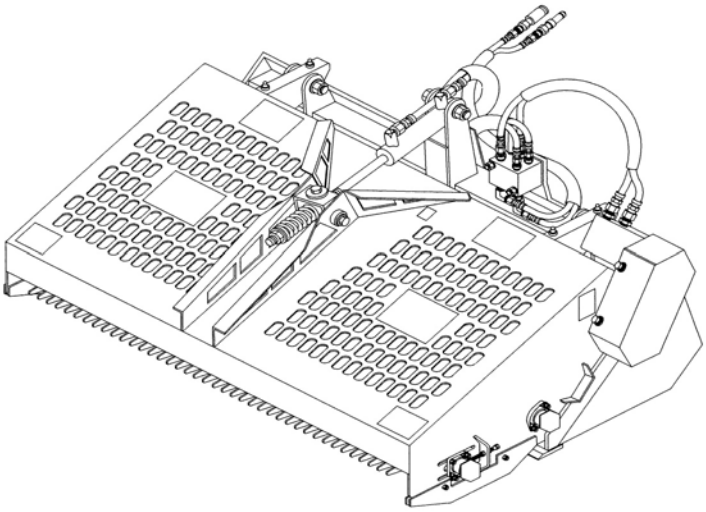

WORKING WIDTH	66 in	76 in.
Overall Width	73.8 in.	83.8 in.
Height	40 in.	40 in.
Depth	64 in.	64 in.
Hopper Capacity	13 cu. ft.	15 cu. ft.

Units includes fold-down stabilizers. Vertical stabilizer may be substituted on 509B, 511B, 611B (extra charge). Must order mounting kit, stabilizer pad option as indicated and bucket for complete unit. Backhoes are not compatible with cab or demolition doors. Doors must be removed for backhoe operation.

AUXILIARY BOOM HYDRAULICS REQUIRED. REAR COUNTERWEIGHTS OR REAR STABILIZERS RECOMMENDED.	PART NUMBER	WEIGHT LB
Model 485 Backhoe (Fold-down stabilizers included with dirt pads only. Bolt-on rubber pads are optional.)	87498441	1010
Model 509B Backhoe (Must select pad option for fold-down or vertical stabilizers)	47670832	1525
Model 511B Backhoe (Must select pad option for fold-down or vertical stabilizers)	47670834	1694
Model 611B Backhoe (Must select pad option for fold-down or vertical stabilizers)	47670835	1930

MODEL COMPATIBILITY	410	420	430	440	435 445	450 465	420CT	440CT	445CT 450CT	SR130 SR150 SR160	SR175 w/10x16.5	SR175 w/12x16.5	SV185	SR200 SR210 w/10x16.5	SR200 SR210 w/12x16.5 or 33/15.5x16.5	SR220 SR240	SR250 SR270	SV250 SV280 SV300 SV340	TR270 TR310	TR320 TR340 TV370 TV380 TV450	REQ'D EQUIPMENT					
																					STD FLOW	HIGH FLOW	CASE DRAIN	FRONT ELEC	DEMO DOOR	2ND AUX
485 BACKHOE	•	•	•				•			•	•	•	•								R					
509B BACKHOE	•	•	•	•	•	•	•	•	•		•	•	•	•	•	•	•	•	•	•	R					
511B BACKHOE		•	•	•	•	•	•	•	•		•	•	•	•	•	•	•	•	•	•	R					
611B BACKHOE				•	•	•		•	•								•	•		•	R					
COMPLETE MOUNTING KIT (BACKHOE AND LOADER HALVES)																										
MOUNTING KIT - 87318192	•	•	•	•			•	•																		
MOUNTING KIT - 87318193					•	•			•																	
MOUNTING KIT - 84420962										•																
MOUNTING KIT - 84420963											•		•	•												
MOUNTING KIT - 84420965												•			•	•	•	•	•	•						
MOUNTING BRACKETS (LOADER HALF ONLY)																										
MOUNTING BRKT - 87318194	•	•	•	•			•	•																		
MOUNTING BRKT - 87318195					•	•			•																	
MOUNTING BRKT - 84466100										•																
MOUNTING BRKT - 84420966											•		•	•												
MOUNTING BRKT - 84420967												•			•	•	•	•	•	•						

MOUNTING KITS (Must Order One to Complete Unit)

	PART NUMBER	WEIGHT LB
Mounting kit for 410, 420, 430, 440, 420CT, 440CT	87318192	223
Mounting kit for 435, 445, 450, 465, 445CT, 450CT	87318193	205
Mounting kit for SR130, SR150, SR160	84420962	250
Mounting kit for SR175, SV185, SR200, SR210 (see table)	84420963	275
Mounting kit for SR175, SR200, SR210, SR220, SR250, SV250, SV300, SV340, TR270, TR320, TR340, TV370, TV380, TV450 (see table)	84420965	270

STABILIZER PAD OPTIONS (Must order one as indicated)

	PART NUMBER	WEIGHT LB
Rubber Street Pads for 485 (fold-down) - not required	84150223	10
Flat Pads for 509B, 511B (fold-down)	47670838	20
Standard Dirt Pads for 509B, 511B (fold-down)	86547400	30
Rubber Street Pads for 509B, 511B (fold-down)	86547423	70
Flat Pads for 611B (fold-down)	47670839	55
Standard Dirt Pads for 611B (fold-down)	47670841	46
Rubber Street Pads for 611B (fold-down)	47670842	95
Flip-Over Pads for 509B, 511B, 611B (fold-down)	86547424	100

FACTORY INSTALLED VERTICAL STABILIZER OPTIONS (Order as needed. Must order pads)

	PART NUMBER	WEIGHT LB
Vertical Stabilizers for 509B, 511B	87034086	90
Vertical Stabilizers for 611B	47670844	90
Standard Dirt Pads for all models (vertical)	86590026	32
Rubber Street Pads for all models (vertical)	86590027	70
Flat Pads for all models (vertical)	86590028	32

FACTORY-INSTALLED OPTIONS (Order as Needed)

	PART NUMBER	WEIGHT LB
C&P Bucket Quick Coupler for 509B, 511B, 611B	84150409	63
Rigid Thumb for 485	87487657	70
Rigid Thumb for 509B, 511B, 611B	87034089	150
Hydraulic Thumb for 509B, 511B, 611B	87034090	150
Hammer Hydraulic Kit for 509B, 511B	47687596	27
Hammer Hydraulic Kit for 611B	47687597	27
2-Way Aux. Hydraulic Kit for 509B, 511B for hydraulic thumb, hammer and auger applications)	47670854	60
2-Way Aux. Hydraulic Kit for 611B (for hydraulic thumb, hammer and auger applications)	47670855	60

STANDARD PIN-ON BUCKET OPTIONS FOR 485 BACKHOE (Must order bucket for complete unit)

	PART NUMBER	WEIGHT LB
10" Bucket (.9 ft^3)	86547428	72
12" Bucket (1.2 ft^3)	86547429	76
16" Bucket (1.9 ft^3)	86547430	89
18" Bucket (2.1 ft^3)	86547431	95
24" Bucket (3.1 ft^3)	86547432	115

Backhoe Options & Accessories (Continued next page)

STANDARD PIN-ON BUCKET OPTIONS FOR 509B, 511B AND 611B BACKHOES (Must order bucket for compete unit.)

	PART NUMBER	WEIGHT LB
12" Bucket (1.5 ft³)*	84150228	125
16" Bucket (2.2 ft³)*	84150229	148
18" Bucket (2.5 ft³)	84150230	156
20" Bucket (2.9 ft³)	47670859	164
24" Bucket (3.6 ft³)	84150231	180
34" Bucket (5.3 ft³)	84150232	238
36" Bucket (5.7 ft³)*	84150233	246
38" Bucket (6.0 ft³)	84150234	255
Auger Adapter Bracket - Allows Case auger drives to pin onto the dipper. Auger operation requires 2-way aux. hydraulic kit.)	87648164	70
Hammer Adapter Bracket - Allows Case hammers to pin onto the dipper. Hammer operation requires hammer valve kit or 2-way aux. hydraulic kit.	47670861	52
Hammer Adapter, Pin and Bushing Kit - required for above adapter (ships from Willoughby, OH)	47741688	17

* Thumb contacts bucket teeth, others mesh with teeth

C&P MOUNT BUCKET OPTIONS FOR 509B, 511B AND 611B BACKHOES (Requires C&P bucket quick coupler.)

	PART NUMBER	WEIGHT LB
12" C&P 027 Heavy Duty bucket (2.4 ft³)*	87034110	175
18" C&P 027 Heavy Duty bucket (3.5 ft³)	87034112	210
24" C&P 027 Heavy Duty bucket (4.8 ft³)*	87034115	250
30" C&P 027 Heavy Duty bucket (6.1 ft³)	87034116	275
36" C&P 027 Heavy Duty bucket (7.5 ft³)	87034117	300
30" C&P 027 Ditch Cleaning bucket (6.1 ft³)	87034118	250
36" C&P 027 Ditch Cleaning bucket (7.5 ft³)	87034119	275
C&P 027 Ripper Tooth	87034120	150
C&P 027 Auger adapter (allows Case auger to be attached to dipper. Requires auxiliary hydraulic kit)	87034122	115
C&P 027 Hammer Adapter Bracket - Allows Case hammers to attach to C&P coupler. Hammer operation requires hammer valve kit or 2-way aux. hydraulic kit.	47687598	109
Hammer Adapter, Pin and Bushing Kit - required for above adapter (ships from Willoughby, OH)	47741688	17

* Thumb contacts bucket teeth, others mesh with teeth

FIELD INSTALLED OPTIONS (Order as Needed)

	PART NUMBER	WEIGHT LB
Mounting bracket for 410, 420, 430, 440, 420CT, 440CT (Loader side only)	87318194	63
Mounting bracket for 435, 445, 450, 465, 445CT, 450CT (Loader side only)	87318195	40
Mounting bracket for SR130, SR150, SR160 (Loader side only)	84466100	51
Mounting bracket for SR175, SV185, SR200, SR210 (see table) (Loader side only)	84420966	43
Mounting bracket for SR175, SR200, SR210, SR220, SR250, SV250, SV300, SV340, TR270, TR320, TR340, TV370, TV380, TV450 (see table) (Loader side only)	84420967	40
Stabilizer Cylinder Guard Kit – 509B, 511B, 611B (fold-down)	47670869	15
C&P Bucket Quick Coupler for 509B, 511B, 611B	84150410	75
Rigid Thumb for 485	87487658	90
Rigid Thumb for 509B, 511B, 611B	87034125	155
Hydraulic Thumb for 509B, 511B, 611B	87034127	124
Hammer Hydraulic Kit for 509B, 511B	47670874	27
Hammer Hydraulic Kit for 611B	47670875	27

Backhoe Options & Accessories (Continued next page)

FIELD INSTALLED OPTIONS (Order as Needed) - continued

	PART NUMBER	WEIGHT LB
2-Way Aux. Hydraulic Kit for 509B, 511B (for hydraulic thumb, hammer and auger applications)	47670876	60
2-Way Aux. Hydraulic Kit for 611B (for hydraulic thumb, hammer and auger applications)	47670877	60
Field-installed Vertical Stabilizers for 509B, 511B	87034129	230
Field-installed Vertical Stabilizers for 611B	47670853	230

FEATURES

- 611B - Best in class digging force; Best in class reach
- All models thumb-ready
- Dual swing cylinders for maximum power
- Cushioned swing with speed control
- Optional thumbs
- Optional aux. hydraulic kits for thumb, hammer and auger operation (509B, 511B, 611B)
- Fold-down or vertical stabilizer options.
- Standard pin-on or C&P quick mount buckets (509B, 511B, 611B)

REQUIREMENTS FOR OPERATION

- Standard auxiliary hydraulics

APPLICATIONS

- Light construction, landscaping, golf courses, nurseries, cemeteries
- Dig trenches for footers and utilities

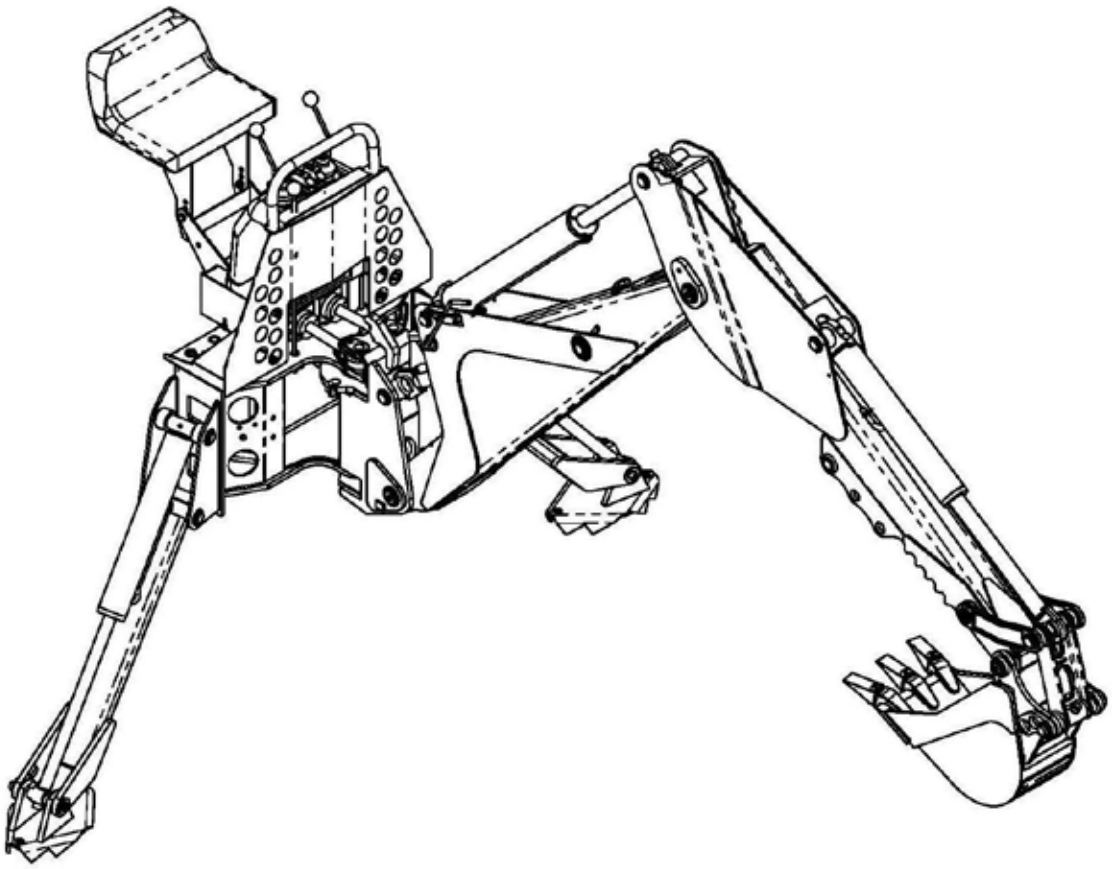

Backhoe Specifications

SKID STEER LOADERS/COMPACT TRACK LOADERS

BACKHOE MODEL		485	509B	511B	611B
TRANSPORT					
A.	Transport Height (w/boom fully retracted)	6' 9"	7' 9"	8' 10"	8' 10"
	Transport Width (w/fold down stabilizers up)	4' 3"	5' 0"	5' 0"	4' 9"
	Transport Width (w/vertical stabilizers)	N/A	4' 9"	4' 9"	5' 10"
B.	Ground Clearance	10"	11"	11"	11"
C.	Overall Length	6' 11"	7' 7"	7' 9"	7' 9"
	Boom Pivot Height	12"	16"	16"	16"
OPERATIONAL					
D.	Digging Depth Maximum	8' 3"	9' 8"	11' 1"	11' 1"
E.	Digging Depth (2') Flat Bottom	8' 2"	9' 7"	11' 0"	11' 0"
F.	Digging Depth (8') Flat Bottom	4' 4"	8' 3"	9' 11"	9' 11"
G.	Overall Operating Height - Fully Raised	10' 1"	12' 10"	14' 5"	14' 5"
H.	Loading Height	5' 3"	6' 10"	8' 0"	8' 0"
J.	Loading Reach	4' 10"	4' 2"	5' 0"	5' 0"
K.	Reach from Swing Post	10' 7"	12' 9"	14' 5"	14' 5"
L.	Bucket Rotation	180°	180°	180°	180°
	Swing Arc	180°	180°	180°	180°
M.	Straight Wall Dig Depth	4' 8"	7' 3"	8' 2"	8' 2"
	Stabilizer Spread-Operating Pos. (fold down)	7' 6"	7' 11"	7' 11"	9' 11"
	Stabilizer Spread-Operating Pos. (vertical)	N/A	4' 9"	4' 9"	5' 10"
	Stabilizer Down Below Grade (fold down)	10"	16"	16"	17"
	Stabilizer Down Below Grade (vertical)	N/A	11"	11"	12"
	System Relief Valve Setting	2,750 psi	2,500 psi	2,500 psi	2,750 psi
	Digging Force - Bucket Cylinder	3,895 lbs.	5,676 lbs.	5,676 lbs.	6,200 lbs.
	Digging Force - Dipper Cylinder	2,358 lbs.	2,754 lbs.	3,056 lbs.	4,350 lbs.

Some dimensions may vary depending on loader model, tire options, etc.

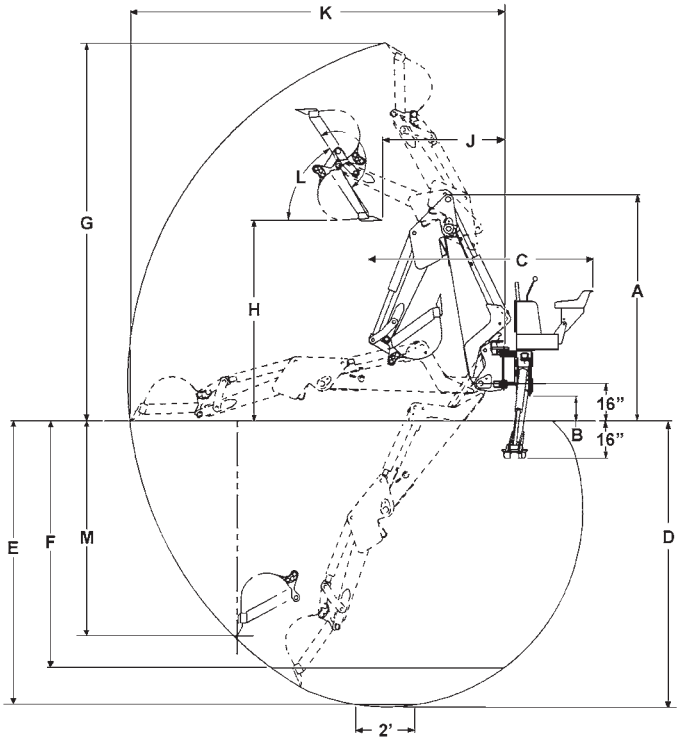

Bale Handler

SKID STEER LOADERS/COMPACT TRACK LOADERS

Unit includes mounting bracket, cylinder, hoses and quick couplers.

	PART NUMBER	WEIGHT LB
BALE HANDLER	87381816	590

MODEL COMPATIBILITY	SR130 SR150 SR160	SR175 SV185	SR200 SR210	SR220 SR240		SV250 SR250 SR270 SV280	SV300 SV340		TR270	TR310		TR320 TR340 TV370 TV380 TV450	REQ'D EQUIPMENT					
	410	420	430	440	435	445 450	465	420CT		440CT	445CT 450CT		STD FLOW	HIGH FLOW	CASE DRAIN	FRONT ELEC	DEMO DOOR	2ND AUX
BALE HANDLER	•	•	•	•	•	•	•	•	•	•	•	•	R					

FEATURES

- Handles bales from 28" to 80"
- Constant pressure eliminates dropped bales
- Hugger arms fabricated with formed round tubing that protects bale wrap
- Lifts, moves, stacks round or rectangular bales

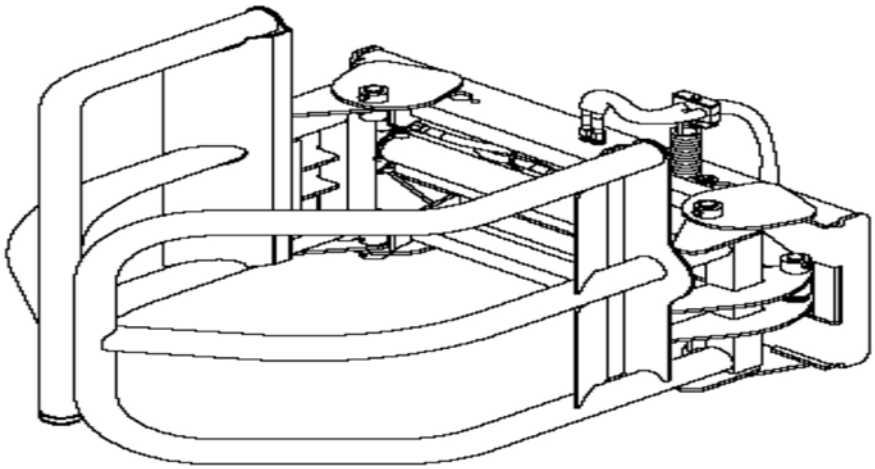

Bale Spear

SKID STEER LOADERS/COMPACT TRACK LOADERS

	PART NUMBER	WEIGHT LB
BALE SPEAR, Std Single	87648168	160
BALE SPEAR, HD Single	87473627	195
BALE SPEAR, HD Dual	87473628	235
BALE SPEAR, 3 x 27"	87473629	210
BALE SPEAR, 3 X 44"	87473630	230

MODEL COMPATIBILITY	SR130 SR150 SR160	SR175 SV185	SR200 SR210	SR220 SR240		SV250 SR250 SR270 SV280	SV300 SV340		TR270	TR310		TR320 TR340 TV370 TV380 TV450	REQ'D EQUIPMENT					
	410	420	430	440	435	445 450	465	420CT		440CT	445CT 450CT		STD FLOW	HIGH FLOW	CASE DRAIN	FRONT ELEC	DEMO DOOR	2ND AUX
BALE SPEAR, Std Single	•	•	•	•	•	•	•	•	•	•	•	•						
BALE SPEAR, HD Single	•	•	•	•	•	•	•	•	•	•	•	•						
BALE SPEAR, HD Dual	•	•	•	•	•	•	•	•	•	•	•	•						
BALE SPEAR, 3 X 27"	•	•	•	•	•	•	•	•	•	•	•	•						
BALE SPEAR, 3 X 44"	•	•	•	•	•	•	•	•	•	•	•	•						

SINGLE TINE BALE SPEAR

Standard Duty

- For bales up to 2000 lb. at 24" load center
- Main spear – single tapered, forged, 1-1/4" dia x 44"
- Stabilizer spikes – dual 1-1/4" dia x 19"

Heavy Duty

- For bales up to 3000 lb. at 24" load center
- Main spear – single tapered, forged, 2-1/8" dia x 49"
- Stabilizer spikes – dual 1-1/4" dia x 19"

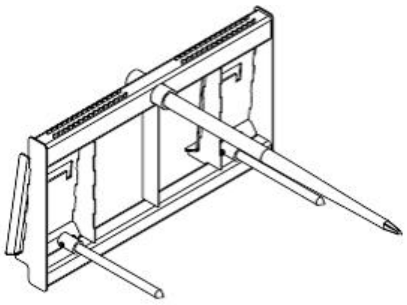

DUAL TINE BALE SPEAR

Heavy Duty

- For bales up to 4000 lb. at 24" load center
- Main spears – dual tapered, forged, 2-1/8" dia x 49"
- Stabilizer spike – single 1-1/4" dia x 19"

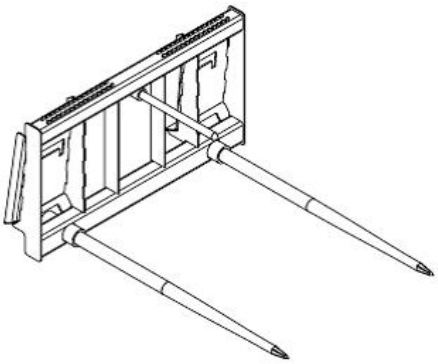

3 TINE BALE SPEAR

- For bales up to 4000 lb. at 24" load center
- Main spikes – 3 tapered, forged, 1-3/4" dia
- Available with 27" or 44" length spears

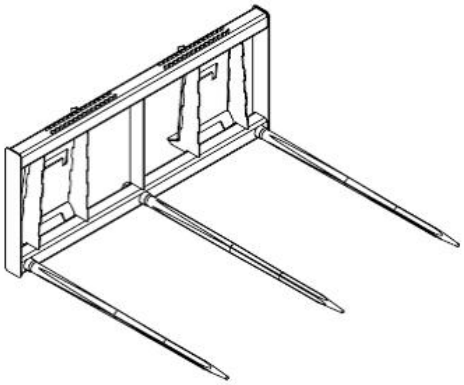

Broom, Angle

SKID STEER LOADERS/COMPACT TRACK LOADERS

PREPACKAGED COMPLETE BROOMS. Units include 14-pin hydraulic angle kit (84215698) installed. Also includes mounting bracket, hoses, quick disconnects and parking stands. Requires Front Electric 14-pin boom harness.

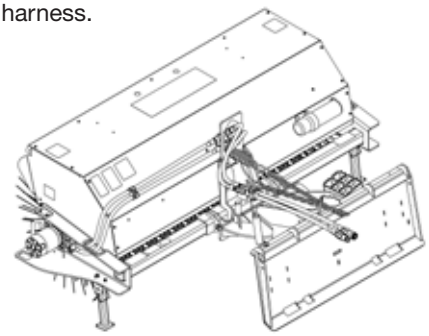

	PART NUMBER	WEIGHT LB
72" Angle Broom with hyd angle and poly/wire brush	48159719	1125
84" Angle Broom with hyd angle and poly/wire brush	48159720	1175

STANDARD BROOMS – Manual angle is standard. Hydraulic angle kits must be ordered separately. Units are shipped with mounting bracket, hoses, quick disconnects and parking stands.

72" ANGLE BROOM with poly/wire combination brush	84215694	1018
84" ANGLE BROOM with poly/wire combination brush	84215695	1098
96" ANGLE BROOM with poly/wire combination brush	84215696	1178
96" ANGLE BROOM DUAL MOTOR with poly/wire combination brush	47358395	1208

OPTIONS (Order as Needed)

Hydraulic Angle Kit (Universal) includes: diverter valve, cylinder, hoses, wiring and switch box mounted in cab.	84215697	20
Hydraulic Angle Kit (14 - Pin) includes: diverter valve, cylinder, hoses, wiring for loaders equipped with 14-pin boom connector.	84215698	20
Hydraulic Angle Kit (2nd Aux) includes cylinder, hoses, and quick disconnects for loaders equipped with 2nd auxiliary function.	84215699	18
Wire Harness Adapter for 85XT, 90XT, 95XT (use with 84215698). Adapts pre- 9/1/2001 units with 8 - pin boom connector.	87383458	2
Heavy Duty Spring/chain kit (for rough terrain)	48184477	11

Loader-mounted water kits available separately. See "Water Kit" page for details.

REPLACEMENT BRUSH SETS

Poly/Wire Brush Set for 72" broom	84376838	140
Poly/Wire Brush Set for 84" broom	84376839	164
Poly/Wire Brush Set for 96" broom	84376840	196
All Poly Brush set for 72" broom	51416970	120
All Poly Brush set for 84" broom	51416971	140
All Poly Brush set for 96" broom	51416972	175

MODEL COMPATIBILITY	SR130 SR150 SR160	410	SR175 SV185 420	430	SR200 SR210 SR220 SR240 440	435	SV250 SR250 SR270 SV280 445 450	SV300 SV340 465	420CT	TR270	TR310 440CT	445CT 450CT	TR320 TR340 TV370 TV380 TV450	REQ'D EQUIPMENT STD FLOW	HIGH FLOW	CASE DRAIN	FRONT ELEC	DEMO DOOR	2ND AUX
72" ANGLE BROOM	•	•	•	•	•	•			•	•				R			O		O
84" ANGLE BROOM		•	•	•	•	•	•	•	•	•	•		•	R			O		O
96" ANGLE BROOM				•	•	•	•	•		•	•	•	•	R			O		O
96" ANGLE BROOM (DUAL)					•	•	•	•		•	•	•	•	R			O		O

FEATURES

- 50/50 Poly/wire brush core
- Parking stands
- Angles 30° right or left
- 32" brush diameter
- Integral nozzle mounting for water application
- Bolt together hood for simple, less costly replacement, if damaged
- Quick-change brush without breaking hydraulic lines

APPLICATIONS

- Street cleaning & parking lot maintenance, road maintenance clean-up, bridge deck clean-up, jobsite clean-up
- Snow removal

REQUIREMENTS FOR OPERATION

- Standard auxiliary hydraulics

Broom, Hopper

SKID STEER LOADERS/COMPACT TRACK LOADERS

Unit includes mounting bracket, hoses and quick disconnects.

	PART NUMBER	WEIGHT LB
60" 215 Hopper Broom with poly/wire brush	51469714	1031
72" 215 Hopper Broom with poly/wire brush	51469715	1153
84" 215 Hopper Broom with poly/wire brush	51469717	1275

OPTIONS (Order as Needed)

Single gutter brush kit, fits right or left (all poly)	84188890	90
Dual gutter brush kit (all poly)	48119587	180
Single gutter brush kit, fits right or left (all wire)	84124630	105
Dual gutter brush kit (all wire)	84124631	205
Dust control kit, broom mounted, includes 25 gallon tank, nozzles and hose. (for standard models only)	445999A1	75

Loader-mounted water kits available separately. See "Water Kit" page for details.

REPLACEMENT BRUSH SETS

Poly/wire brush set for 60" broom	84375436	97
Poly/wire brush set for 72" broom	84375437	113
Poly/wire brush set for 84" broom	84375438	134

REPLACEMENT BOLT-ON EDGES

Bolt-on edge for 60" broom	51469729	65
Bolt-on edge for 72" broom	51469730	77
Bolt-on edge for 84" broom	51469731	90

MODEL COMPATIBILITY	SR130	SR150 SR160	SR175 SV185	SR200 SR210	SR220 SR240	SV250 SR250 SR270 SV280	SV300 SV340		TR270 TR310		TR320 TR340 TV370 TV380 TV450	REQ'D EQUIPMENT					
		410	420	430	440 435	445 450	465	420CT	440CT	445CT 450CT		STD FLOW	HIGH FLOW	CASE DRAIN	FRONT ELEC	DEMO DOOR	2ND AUX
60" 215 HOPPER BROOM	•	•	•	•								R					
72" 215 HOPPER BROOM		•	•	•	•	•	•	•	•		•	R					
84" 215 HOPPER BROOM				•	•	•	•		•	•	•	R					

FEATURES

- Bi-directional motor for forward or reverse sweeping
- High capacity single drive motor for 10-25 gpm systems
- Direct drive brush motor eliminates chains and sprockets
- No caster wheel allows closer proximity to objects and better contact with sweeping surface
- Peripheral rubber skirt keeps debris and dust contained
- Combination poly and wire brush
- Heavy duty front bumper with integral water nozzle mounts
- Replaceable bolt-on bucket edge
- No chains needed for dumping
- 26" brush diameter
- Optional gutter brush mounts on left or right side, or dual brush option
- Hydraulic hoses and flat face hydraulic disconnects included

APPLICATIONS

- Street cleaning & parking lot maintenance, road maintenance clean-up, bridge deck clean-up, jobsite clean-up

REQUIREMENTS FOR OPERATION

- Standard auxiliary hydraulics

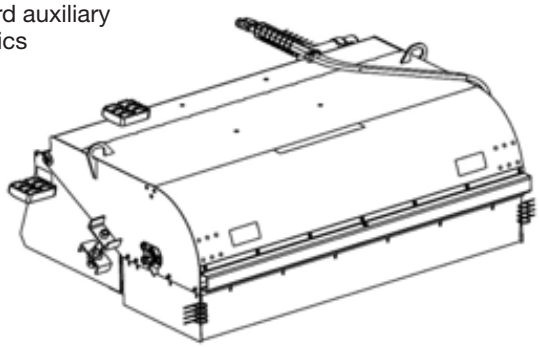

Broom, Pick-up Standard and VS Vacuum

SKID STEER LOADERS/COMPACT TRACK LOADERS

Units are shipped with mounting bracket, hoses, quick disconnects.

	PART NUMBER	WEIGHT LB
60" STANDARD PICK-UP BROOM with poly/wire combination brush	87553107	1225
72" STANDARD PICK-UP BROOM with poly/wire combination brush	87553108	1350
84" STANDARD PICK-UP BROOM with poly/wire combination brush	87553109	1475
60" VS VACUUM PICK-UP BROOM with poly/wire combination brush	51422416	1480
72" VS VACUUM PICK-UP BROOM with poly/wire combination brush	51422417	1600
84" VS VACUUM PICK-UP BROOM with poly/wire combination brush	51422418	1725

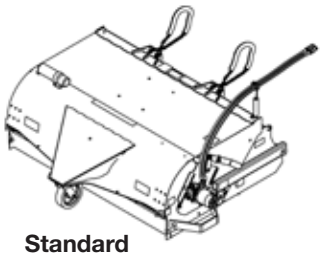

Standard

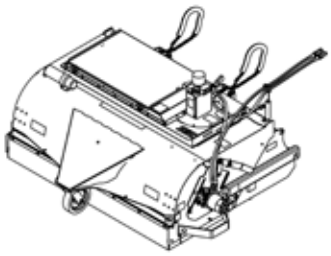

VS Vacuum

ELECTRIC CONTROL (one required for VS units)

Wire Harness Connector – For units with 14-pin Front Elec.	48114556	2
Universal Electric Control kit – For units w/o 14-pin Front Elec.	48114557	2

OPTIONS (Order as Needed)

Single gutter brush kit, fits right or left (all poly)	84188890	90
Dual gutter brush kit (all poly)	48119587	180
Single gutter brush kit, fits right or left (all wire)	84124630	105
Dual gutter brush kit (all wire)	84124631	205
Dust control kit, broom mounted, includes 25 gallon tank, nozzles and hose. (for std models only)	445999A1	75

Loader-mounted water kits available separately. See "Water Kit" page for details.

REPLACEMENT BRUSH SETS

Poly/wire brush set for 60" broom	84375436	97
Poly/wire brush set for 72" broom	84375437	113
Poly/wire brush set for 84" broom	84375438	134

REPLACEMENT BOLT-ON EDGES

Bolt-on edge for 60" broom	51469729	65
Bolt-on edge for 72" broom	51469730	77
Bolt-on edge for 84" broom	51469731	90

MODEL COMPATIBILITY	SR130	SR150 SR160	SR175 SV185	SR200 SR210	SR220 SR240		SV250 SR250 SR270 SV280	SV300 SV340		TR270	TR310		TR320 TR340 TV370 TV450	REQ'D EQUIPMENT					
		410	420	430	440	435	445 450	465	420CT		440CT	445CT 450CT		STD FLOW	HIGH FLOW	CASE DRAIN	FRONT ELEC	DEMO DOOR	2ND AUX
60" STD/VS PICK-UP BROOM	•	•	•	•										R			O		
72" STD/VS PICK-UP BROOM		•	•	•	•	•	•	•	•	•	•		•	R			O		
84" STD/VS PICK-UP BROOM				•	•	•	•	•		•	•	•	•	R			O		

FEATURES – Standard and VS

- Bi-directional motor for forward or reverse sweeping
- High capacity single drive motor for 10-23 gpm systems
- Quick-change brush without breaking hydraulic lines
- Drive motor can be removed for brush change without tools
- No tools required for brush pattern adjustment
- "Volumizing" feature for increased bucket capacity
- Heavy duty caster wheel and wheel mount
- Integral sprinkler nozzle mounts
- Flat face hydraulic quick disconnects included
- Hydraulic hoses and disconnects included
- Optional gutter brush, mounts left, right, or in tandem
- Combination poly and wire brush
- Replaceable bolt-on bucket edge
- Direct drive brush motor eliminates chains and sprockets
- 26" diameter brush

FEATURES – VS only

- Allows dust mitigation without a water tank
- Washable 10 micron coated filter works in dry or wet conditions
- Can help meet OSHA regulations regarding crystalline silica dust in work environment
- 12-volt shaker dislodges loose debris from the filter media directly into the hopper bucket

APPLICATIONS

- Street cleaning & parking lot maintenance, road maintenance clean-up, bridge deck clean-up, jobsite clean-up

REQUIREMENTS FOR OPERATION

- Standard auxiliary hydraulics
- Front electric control option (VS Vacuum only)

Bucket, 4x1 (Utility)

SKID STEER LOADERS/COMPACT TRACK LOADERS

Unit includes hoses and quick disconnects.

	PART NUMBER	WEIGHT LB
BUCKET, 4X1 UTILITY, 66" (10.2 ft³ struck/ 14.2 ft³ heaped capacity)	87648133	650
BUCKET, 4X1 UTILITY, 72" (11.2 ft³ struck/ 15.6 ft³ heaped capacity)	87648134	685

OPTIONS FOR UTILITY DUTY BUCKETS

Bolt-on spill guard for 66" 4X1 bucket	87648135	28
Bolt-on spill guard for 72" 4X1 bucket	87648136	30

MODEL COMPATIBILITY	SR130	SR150 SR160	SR175 SV185	SR200 SR210		SR220 SR240		SV250 SR250 SR270 SV280	SV300 SV340		TR270	TR310		TR320 TR340 TV370 TV450	REQ'D EQUIPMENT					
		410	420		430	440	435	445	450 465	420CT		440CT	445CT 450CT		STD FLOW	HIGH FLOW	CASE DRAIN	FRONT ELEC	DEMO DOOR	2ND AUX
66" 4x1 BUCKET (UTILITY)	•	•	•							•					R					
72" 4x1 BUCKET (UTILITY)		•	•	•	•	•				•					R					

FEATURES

- Includes hoses and quick disconnects
- 2" cylinder bore; 1-1/8" diameter rod
- Fixed greasable cylinder ends
- 10 ga. 100K psi bucket construction
- 1/2" x 4" wear strips on bucket floor
- 2,350 lb. clamping force
- 34-5/8" clam opening
- 23-1/8" floor length
- Optional spill guards increase struck capacity approx. 29% and heaped capacity approx. 24%
- Compatible with toothbars and bolt-on edges

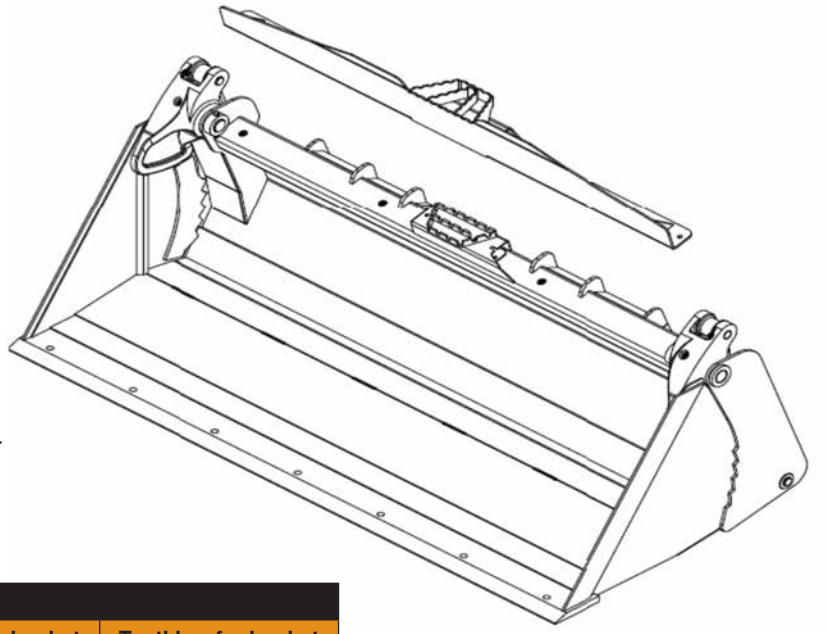

APPLICATIONS

- Functions as a loader bucket, clam, dozer, scraper and bottom dump bucket
- Material spreading – gravel, mulch, dirt, etc.

ACCESSORIES				
Width	Bolt-on Edge	Bolt-on Rezloh™ edge	Toothbar for bucket w/o bolt-on edge	Toothbar for bucket with bolt-on edge
66"	86577167	HCE86577167	9624721H	86599707H
72"	86577169	HCE86577169	9624722H	86599708H

Bucket, 4x1 (Construction)

SKID STEER LOADERS/COMPACT TRACK LOADERS

Unit includes hoses and quick disconnects.

	PART NUMBER	WEIGHT LB
BUCKET, 4X1 CONSTRUCTION, 72" (12.5 ft³ struck/ 17.8 ft³ heaped)	87648161	930
BUCKET, 4X1 CONSTRUCTION, 78" (13.6 ft³ struck/19.3 ft³ heaped)	87648162	965
BUCKET, 4X1 CONSTRUCTION, 84" (14.6 ft³ struck/20.8 ft³ heaped)	87648163	1005

OPTIONS FOR CONSTRUCTION DUTY BUCKETS

Bolt-on spill guard for 72" 4X1 bucket	87648136	30
Bolt-on spill guard for 78" 4X1 bucket	87648165	33
Bolt-on spill guard for 84" 4X1 bucket	87648166	35

MODEL COMPATIBILITY	SR130 SR150 SR160		SR175 SV185		SR200 SR210 SR220 SR240		SV250 SR250 SR270 SV280	SV300 SV340		TR270	TR310		TR320 TR340 TV370 TV450	REQ'D EQUIPMENT					
	410	420		430	440	435	445 450	465	420CT		440CT	445CT 450CT		STD FLOW	HIGH FLOW	CASE DRAIN	FRONT ELEC	DEMO DOOR	2ND AUX
72" 4x1 BUCKET (CONSTR)			•	•	•	•	•	•	•	•	•			R					
78" 4x1 BUCKET (CONSTR)					•	•	•	•		•	•		•	R					
84" 4x1 BUCKET (CONSTR)						•	•	•				•	•	R					

FEATURES

- Includes hoses and quick disconnects
- 2-1/2" cylinder bore; 1-1/4" diameter rod
- Spherical, greasable cylinder ends
- 1" x 6" clam cutter bar
- 7 ga, 100K psi bucket construction
- 5/8" x 5" wear strips on bucket floor
- Dual pilot-operated check hydraulic system for positive load holding
- 4,000 lb. clamping force
- 34-3/4" clam opening
- 26-5/8" floor length
- Replaceable bolt-on side cutters
- Optional spill guards (increase struck capacity approx. 26% and heaped capacity approx 21%)
- Compatible with toothbars and bolt-on edges

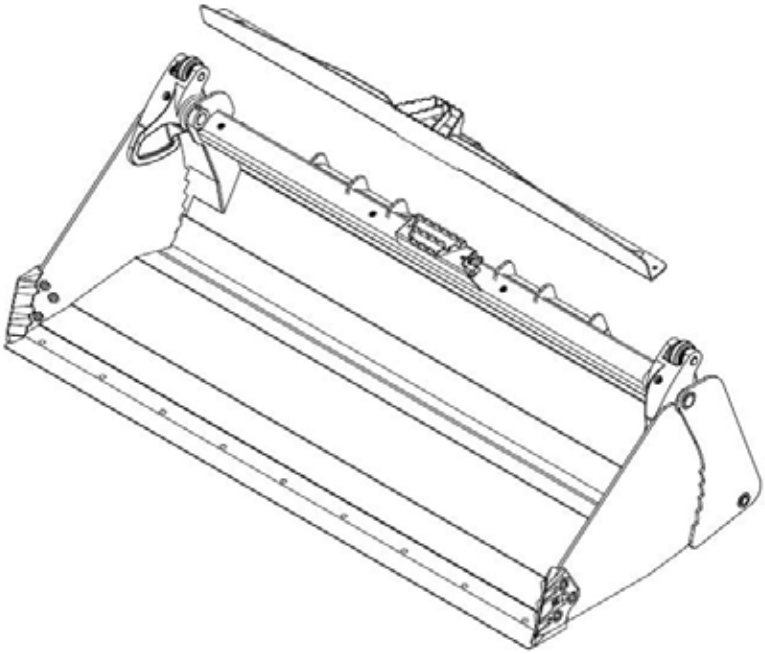

APPLICATIONS

- Functions as a loader bucket, clam, dozer, scraper and bottom dump bucket
- Material spreading – gravel, mulch, dirt, etc.

ACCESSORIES				
Width	Bolt-on Edge	Bolt-on Rezloh™ edge	Toothbar for bucket w/o bolt-on edge	Toothbar for bucket with bolt-on edge
72"	86577169	HCE86577169	87299776	87299779
78"	86577171	HCE86577171	87299777	87299780
84"	86577173	HCE86577173	87299778	87299781

Bucket, Power Side Discharge

SKID STEER LOADERS/COMPACT TRACK LOADERS

Unit includes hoses and quick disconnects.

STANDARD AUXILIARY BOOM HYDRAULICS REQUIRED	PART NUMBER	WEIGHT LB
BUCKET, POWER SIDE DISCHARGE (sand), 60"	84195960	805
BUCKET, POWER SIDEDISCHARGE (sand), 72"	84195961	915
BUCKET, POWER SIDE DISCHARGE (sawdust), 72"	84195962	1120
BUCKET, POWER SIDE DISCHARGE (sawdust), 84"	84195963	1300

MODEL COMPATIBILITY	SR130	SR150 SR160	SR175 SV185	SR200 SR210	SR220 SR240		SV250 SV280	SR250 SR270	SV300 SV340		TR270	TR310		TR320 TR340 TV370 TV450	REQ'D EQUIPMENT					
		410	420	430	440	435	445	450	465	420CT		440CT	445CT 450CT		STD FLOW	HIGH FLOW	CASE DRAIN	FRONT ELEC	DEMO DOOR	2ND AUX
60" POWER SIDE DISCHARGE (SAND)	•	•	•								•				R					
72" POWER SIDE DISCHARGE (SAND)		•	•	•	•	•	•	•	•	•	•	•			R					
72" POWER SIDE DISCHARGE (SAWDUST)		•	•	•	•	•	•	•	•	•	•	•		•	R					
84" POWER SIDE DISCHARGE (SAWDUST)					•	•	•	•	•			•	•	•	R					

FEATURES

- Adjustable discharge gates
- Rubber discharge belt with exposure baffle
- Left or right discharge
- Sawdust model includes agitator to eliminate bridging

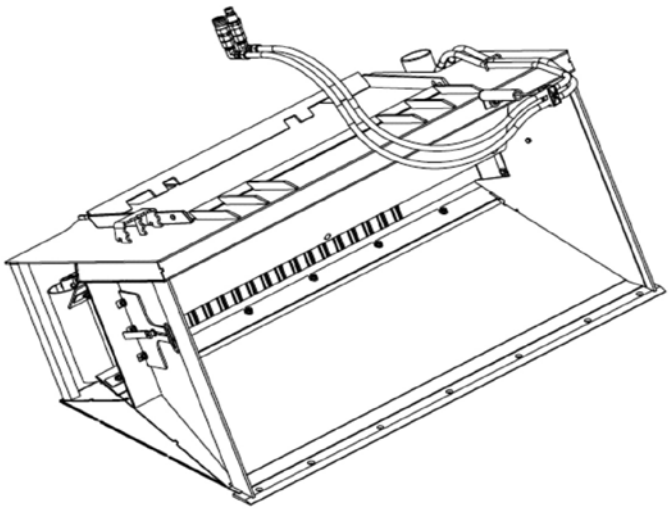

APPLICATIONS

- The power side discharge buckets are designed to collect and discharge sawdust, mulch, and sand into barns, stalls and orchards, or backfill. Capable of spreading a variety of of materials such as silage, stone, or topsoil.
- Road maintenance, agriculture, landscaping, sand bagging

REQUIREMENTS

- Standard auxiliary hydraulics
- Bolt-on cutting edge recommended (see below)

	WEIGHT (lbs.)	HEIGHT (in.)	DEPTH (in.)	CAPACITY (yd^3)	Material Performance Rating*					
					Sand	Aggregate	Topsoil	Sawdust	Mulch	Silage
60" (SAND)	869	31.8	39.5	0.55	Best	Good	Good	Poor	Poor	Fair
72" (SAND)	959	31.8	39.5	0.68	Best	Good	Good	Poor	Poor	Fair
72" (SAWDUST)	1,184	45.3	47	1.34	Fair	Fair	Fair	Best	Best	Good
84" (SAWDUST)	1,328	45.3	47	1.58	Fair	Fair	Fair	Best	Best	Good

* Ratings consider the material to be in a typical working condition with respect to moisture content. In most cases, as moisture content increases, performance will be adversely affected.

ACCESSORIES		
Width	Bolt-on Edge	Hardware kit
60"	86577165	86635434
72"	86577169	86635434
84"	86577173	86635435

Chipper

SKID STEER LOADERS/COMPACT TRACK LOADERS

AUXILIARY BOOM HYDRAULICS REQUIRED	PART NUMBER	WEIGHT LB
MODEL 74500 STANDARD FLOW CHIPPER	87330077	1145
MODEL 74800 HIGH FLOW CHIPPER	87330078	1525

MODEL COMPATIBILITY	SR130 SR150 SR160	410	SR175 SV185 420	SR200 SR210 430	SR220 SR240 440	435	SV250 SR250 SR270 SV280 445 450	SV300 SV340 465	420CT	TR270	TR310 440CT	445CT 450CT	TR320 TR340 TV370 TV450	REQ'D EQUIPMENT STD FLOW	HIGH FLOW	CASE DRAIN	FRONT ELEC	DEMO DOOR	2ND AUX
CHIPPER - STD. FLOW		•	•	•	•	•	•	•	•	•	•	•	•	R		R			
CHIPPER - HIGH FLOW			•	•	•	•	•	•	•	•	•	•	•		R	R			

SPECIFICATIONS		
MODEL	74500	74800
Hydraulics	standard-flow, min. 15 gpm	high-flow, min. 25 gpm
Feed Opening Size	5 1/2" x 7"	9" x 9"
Continuous Chipping Size	3"	5"
Feed System	Variable hydraulic	Variable hydraulic
Chipper Disc	20" x 1-1/4" 140 lbs.	30" x 1-1/4" 275 lbs.
Operating Weight (lbs.)	1,145	1,525

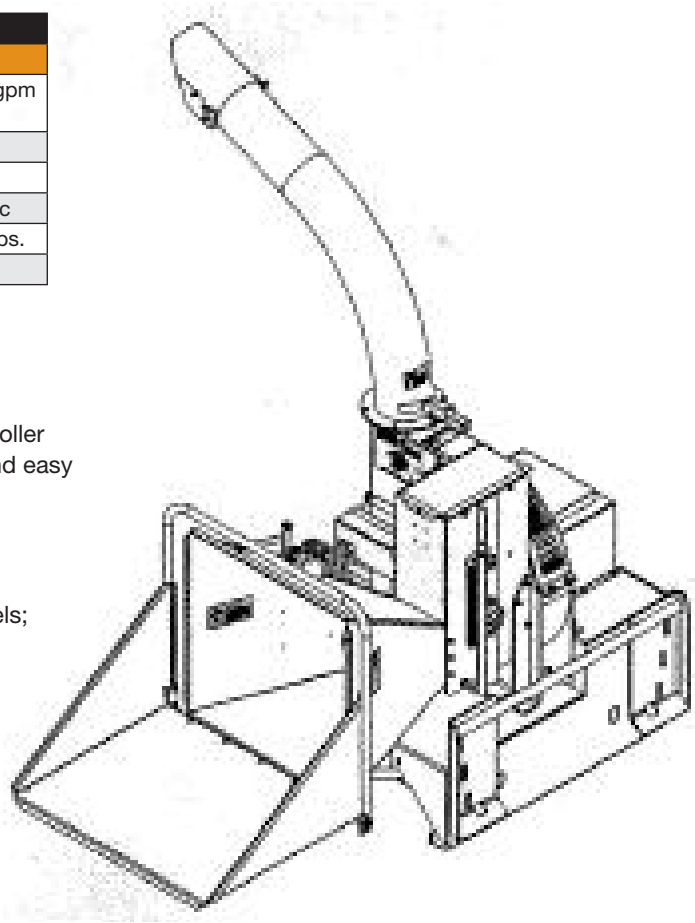

FEATURES

- Chipper has two mounts, so it can be set to feed in front or to the curb side
- Four position manual valve easily controls the hydraulic feed roller
- Built-in hydraulic jack makes feed roller maintenance quick and easy
- Infinitely variable feed roll speed
- Feed roll control lever accessible on both sides of unit

REQUIREMENTS FOR OPERATION

- Case drain line required for both standard and high flow models; Case drain kit available for 400-series loaders
- Standard flow, min. 15 gpm for Model 74500
- High flow, min. 25 gpm for Model 74800

APPLICATIONS

- Chip brush, limbs from tree trimming, land clearing and storm damage clean-up

Cold Planer, High Flow

SKID STEER LOADERS/COMPACT TRACK LOADERS

For specified skid-steer loaders equipped with optional high flow, auxiliary boom hydraulics. Includes drum, hydraulic depth, tilt, hydraulic sideshift, hoses, fittings and quick couplers.

	PART NUMBER	WEIGHT LB
COLD PLANER HP16* - 16" with hydr. controls (26-30 gpm)	84539377	2150
COLD PLANER HP18 - 18" with hydr. controls (26-30 gpm)	84539378	2200
COLD PLANER HP16* - 16" with hydr. controls (31-44 gpm)	84539379	2150
COLD PLANER HP18 - 18" with hydr. controls (31-44 gpm)	84539380	2200
COLD PLANER HP24 - 24" with hydr. controls (31-44 gpm)	84539381	2400
COLD PLANER HP30 - 30"with hydr. controls (31-44 gpm)	84539382	2600
COLD PLANER HP40 - 40" with hydr. controls (31-44 gpm)	84539383	3100
EHF COLD PLANER HP24 - 24" with hydr. controls (31-44 gpm)	84523776	2400
EHF COLD PLANER HP30 - 30" with hydr. controls (31-44 gpm)	84523778	2600
EHF COLD PLANER HP40 -40" with hydr. controls (31-44 gpm)	84523780	3100

*16" drum installed in 18" housing.

ADDITIONAL COMPONENTS (Order as Needed)

2.5" slot cutting drum for HP16, HP18, HP24, HP30, HP40	87045459	120
4" slot cutting drum for HP16, HP18, HP24, HP30, HP40	87045460	135
6" slot cutting drum for HP16, HP18, HP24, HP30, HP40	87045461	150
Universal electric control kit for units without front electric (not for EHF planers)	47403651	4
Wire harness adapter (adapts pre-9/1/2001 75XT, 85XT, 90XT, 95XT w/8-pin connector to 14-pin connector)	87048529	2
Water nozzle kit, includes 3 spray nozzles, tubing and fitting to reach coupler on loader boom for SP12 - HP30	87045462	10
Water nozzle kit, includes 4 spray nozzles, tubing and fitting to reach coupler on loader boom for HP40	87326406	12

Pressurized Water Kit available. See “Water Kit” page for details

MODEL COMPATIBILITY	SR130 SR150 SR160		SR175 SV185		SR200 SR210	SR220 SR240	SV250 SV280		SR250 SR270	SV300 SV340			TR270 TR310	TV370	TR320 TR340 TV450	REQ’D EQUIPMENT						
	410	420		430		440 435	445 450	465			420CT	440CT		445CT 450CT		STD FLOW	HIGH FLOW	EHF	CASE DRAIN	FRONT ELEC	DEMO DOOR	2ND AUX
16" COLD PLANER (26-30)			•														R		R	R		
18" COLD PLANER (26-30)			•														R		R	R		
16" COLD PLANER (31-44)		•		•	•	•	•	•	•	•	•	•	•	•	•		R		R	R		
18" COLD PLANER (31-44)				•	•	•	•	•	•	•		•	•	•	•		R		R	R		
24" COLD PLANER (31-44)					•	•	•	•	•	•		•	•	•	•		R		R	R		
30" COLD PLANER (31-44)						•	•	•	•	•		•		•	•		R		R	R		
40" COLD PLANER (31-44)							•	•	•	•				•	•		R		R	R		
EHF 24" COLD PLANER (31-44)									•	•					•	R		R	R	R		
EHF 30" COLD PLANER (31-44)									•	•					•	R		R	R	R		
EHF 40" COLD PLANER (31-44)									•	•					•	R		R	R	R		

Cold Planers, High Flow (Continued next page)

Cold Planer, High Flow

SKID STEER LOADERS/COMPACT TRACK LOADERS

FEATURES

- Independent pivoting head for better contour tracking
- Removable wheels for planing next to curbs and obstructions
- Hinged cover for pick maintenance access
- Pick maintenance tool included
- Solid steel wheel construction (hardened) with greasable manifold pins and secluded zerks
- Plated and powder-coated surfaces offer resistance to harsh environments
- High rear spoil clearance to prevent recirculation of material
- T1 steel construction in high wear areas
- ± 8° tilt capability
- 0-5" cutting depth, 0-19" sideshift center to right
- Convenient, fully electro-hydraulic, in-cab control for depth, tilt, and sideshift
- Depth and tilt position indicators
- Protective shields for hydraulic and electrical components
- Independent self-leveling depth adjustment shoe allows for precise lapping cuts and taper cuts (i.e. multiple pass and approaches to RR crossings)
- Efficient piston drive motor
- Planetary drive delivers high torque
- Universal, general purpose picks standard

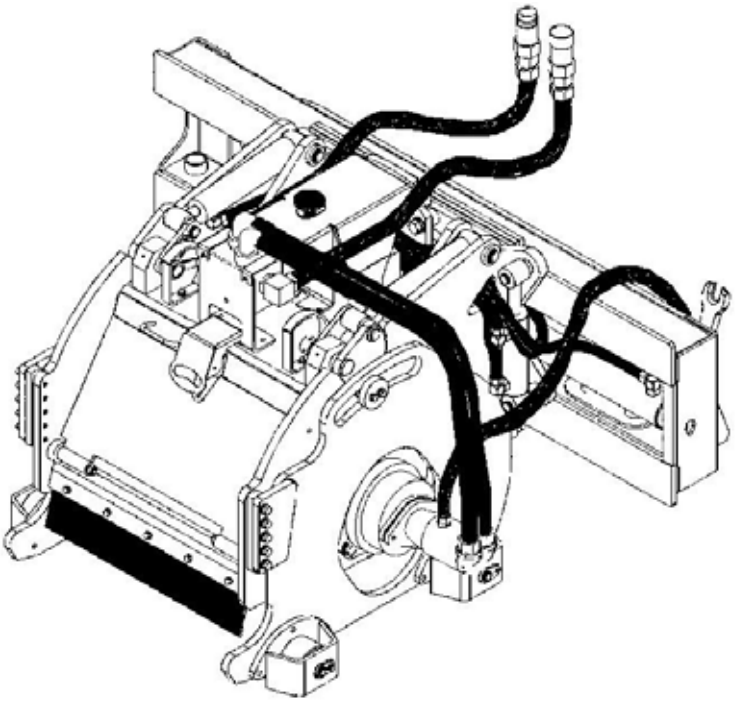

REQUIREMENTS FOR OPERATION

- High flow auxiliary hydraulics (EHF for specified units)
- Front electric control kit or universal electric control kit
- Case drain

APPLICATIONS

- For heavy duty planing jobs, including milling transition and repair areas, frost heaves and expansion joints

Cold Planer, Standard Flow

SKID STEER LOADERS/COMPACT TRACK LOADERS

For specified skid-steer loaders equipped with standard auxiliary boom hydraulics. Includes drum, manual depth and tilt, hydraulic sideshift, hoses, fittings and quick couplers. Fully hydraulic controls are optional.

STANDARD BOOM HYDRAULICS (12 - 22 gpm)	PART NUMBER	WEIGHT LB
COLD PLANER SP12M-12" manual controls	87048530	1450
COLD PLANER SP12H -12" with hydraulic controls. Requires front electric kit.	87048531	1500

ADDITIONAL COMPONENTS (Order as Needed)

2.5" slot cutting drum for SP12	87045458	90
Water nozzle kit, includes 3 spray nozzles, tubing, and fitting to reach coupler on loader boom for SP12 - HP30	87045462	10
Wire harness adapter (adapts pre-9/1/2001 75XT, 85XT, 90XT, 95XT w/8-pin connector to 14-pin connector)	87048529	2

Pressurized Water Kit available. See “Water Kit” page for details.

MODEL COMPATIBILITY	SR130 SR150 SR160	410	SR175 SV185 420	SR200 SR210 430	SR220 SR240 440	435	SV250 SR250 SR270 SV280 445 450	SV300 SV340 465	420CT	TR270 TR310 440CT	445CT 450CT	TR320 TR340 TV370 TV450	REQ’D EQUIPMENT STD FLOW	HIGH FLOW	CASE DRAIN	FRONT ELEC	DEMO DOOR	2ND AUX
12" COLD PLANER - MANUAL (12-22)	•	•	•	•	•	•	•	•	•	•	•	•	R					
12" COLD PLANER - HYD (12-22)		•	•	•	•	•	•	•	•	•	•	•	R			R		

FEATURES

- Independent pivoting head for better contour tracking
- Removable wheels for planing next to curbs and obstructions
- Hinged cover for pick maintenance access
- Solid steel wheel construction (hardened) with greasable manifold pins and secluded zerks
- Pick maintenance tool included
- Plated and powder-coated surfaces offer resistance to harsh environments
- High rear spoil clearance to prevent recirculation of material
- T1 steel construction in high wear areas
- 19" drum diameter with 37 general purpose carbide picks
- ± 11° tilt capability
- 0-5" cutting depth, 0-19" sideshift center to right
- Manual depth and tilt, hydraulic sideshift on SP12M
- Fully electro-hydraulic, in-cab control for depth, tilt, and sideshift on SP12H
- Depth and tilt position indicators
- Planetary drive delivers high torque
- Protective shields for hydraulic and electrical components
- Integral water nozzle ports
- Universal, general purpose picks standard

REQUIREMENTS FOR OPERATION

- Standard auxiliary hydraulics
- Front electric kit (SP12H)

APPLICATIONS

- Convenient for planing frost heaves, expansion joints, and removing lane markings

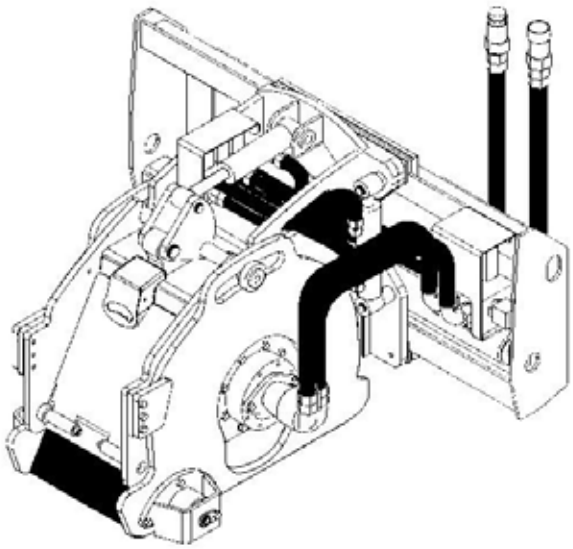

Cold Planers, Standard Flow (Continued next page)

Cold Planer – Specifications

SKID STEER LOADERS/COMPACT TRACK LOADERS

SPECIFICATIONS						
MODEL	**SP12**	**HP16***	**HP18**	**HP24**	**HP30**	**HP 40**
Operating Weight - lb. (kg)	1400 (635)	2100 (952)	2150 (975)	2350 (1066)	2550 (1157)	3100 (1338)
Cutting Depth - in. (mm)	0-5 (0-127)	0-5 (0-127)	0-5 (0-127)	0-5 (0-127)	0-5 (0-127)	0-5 (0-127)
Cutting Width - in. (mm)	12 (305)	16 (450)	18 (450)	24 (600)	30 (762)	40 (1016)
Drum Diameter - in. (mm)	19 (482)	22 (559)	22 (559)	22 (559)	22 (559)	22 (559)
Tilt	± 11°	± 8°	± 8°	± 8°	± 8°	± 8°
Sideshift - in. (mm)	0-19 (0-483) center to right	-3-22 (-76-560) center to right	-3-22 (-76-560) center to right	-3-22 (-76-560) center to right	-3-22 (-76-560) center to right	-3-22 (-76-560) center to right
Hydraulic requirement-gpm (l/m)	12- 22 (45-83)	26-30 or 31-44 (98-115 or 116-166)	26-30 or 31-44 (98-115 or 116-166)	31-44 (116-166)	31-44 (116-166)	31-44 (116-166)
Hydraulic requirement - psi (bar)	2500-3000 (172-206)	2500-3000 (172-206)	2500-3500 (172-241)	2500-3500 (172-241)	2500-3500 (172-241)	2500-3500 (172-241)
EHF Hydraulic requirement -psi (bar)				4000 (275)	4000 (275)	4000 (275)
Wheels/shoes	Both with independent left/right control	Both with independent left/right control	Both with independent left/right control	Both with independent left/right control	Both with independent left/right control	Both with independent left/right control
Drive	Planetary	Planetary	Planetary	Planetary	Planetary	Planetary
Controls	Manual - SP12 Hyd. - SP12H hydraulic optional	Full hydraulic with in-cab controls	Full hydraulic with in-cab controls	Full hydraulic with in-cab controls	Full hydraulic with in-cab controls	Full hydraulic with in-cab controls
No. of Carbide Picks	37	43	45	57	69	89

* 16" drum installed in 18" housing.

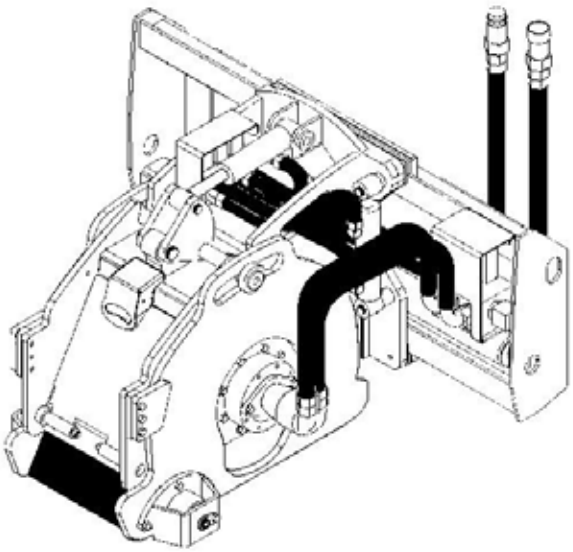

SP12

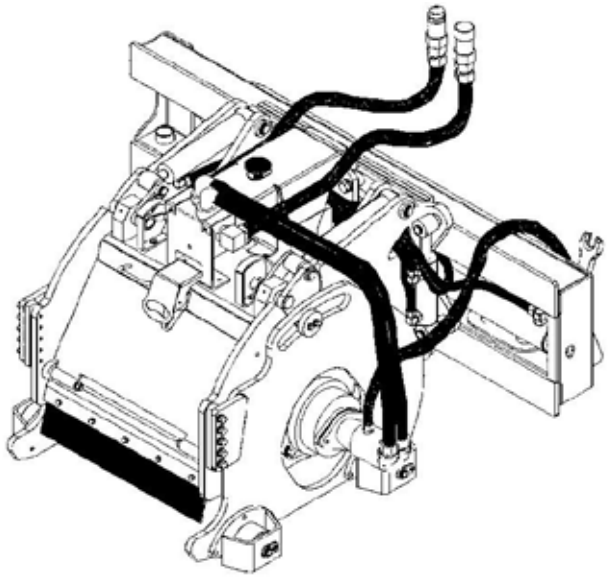

HP24

Cold Planer, LT Series

SKID STEER LOADERS/COMPACT TRACK LOADERS

Unit includes hoses and quick disconnects.

	PART NUMBER	WEIGHT LB
Standard Flow Cold Planers with manual depth, tilt and hydraulic side shift		
COLD PLANER - 12" Std flow (13-25 gpm)	48035234	1231
COLD PLANER - 16" Std flow (16-25 gpm)	48035235	1321
High Flow Cold Planers with hydraulic depth, tilt and side shift		
COLD PLANER - 16" High Flow (24-45 gpm)	48035236	1606
COLD PLANER - 18" High Flow (26-45 gpm)	48035237	1656
COLD PLANER - 24" High Flow (28-45 gpm)	48035238	1786
COLD PLANER - 30" High Flow (28-45 gpm)	48035239	1951
COLD PLANER - 36" High Flow (31-45 gpm)	48035240	2111

OPTIONAL EQUIPMENT (Must order harness adapter or electric kit for complete unit.)

Electric Harness Adapter - 14 pin round connector - for loaders with front electric kit.	87023319	1
Universal electric control kit for loaders without front electric kit	48038648	15

ADDITIONAL COMPONENTS (Order as needed)

Water nozzle kit, includes 4 spray nozzles, tubing and fitting to reach coupler on loader boom	48035330	7

Pressurized Water Kit available. See “Water Kit” page for details.

MODEL COMPATIBILITY	SR130 SR150 SR160	SR175 SV185	SR200 SR210		SR220 SR240	SV250 SR250 SR270 SV280	SV300 SV340	TR270	TR310	TR320 TR340 TV370 TV450	REQ’D EQUIPMENT					
	410	420	430	440	435	445 450	465	420CT	440CT	445CT 450CT	STD FLOW	HIGH FLOW	CASE DRAIN	FRONT ELEC	DEMO DOOR	2ND AUX
COLD PLANER - 12" Std flow (13-25)	•	•	•	•	•	•	•	•	•	•	R					
COLD PLANER - 16" Std flow (16-25)		•	•	•	•	•	•	•	•	•	R					
COLD PLANER - 16" High Flow (24-45)		•	•	•	•	•	•	•	•	•		R		R	O	
COLD PLANER - 18" High Flow (26-45)		•	•	•	•	•	•	•	•	•		R		R	O	
COLD PLANER - 24" High Flow (28-45)		•	•	•	•	•	•	•	•	•		R		R	O	
COLD PLANER - 30" High Flow (28-45)				•	•	•	•		•	•		R		R	O	
COLD PLANER - 36" High Flow (31-45)				•	•	•	•		•	•		R		R	O	

FEATURES

- Side shifts 24" left or right to cut next to obstacles
- High flow models feature planetary gearbox drive for increased torque and durability
- Optimized pick pattern provides a faster cut by maximizing the horsepower per pick
- Std asphalt picks included
- Hoses and quick disconnects included

APPLICATIONS

- Make full depth utility cuts
- Mill frost heaves around manholes
- Restore proper drainage to pavement
- Add texture to pavement for skid resistance

REQUIREMENTS FOR OPERATION

- Front electric kit or universal electric control kit for high flow units
- Case drain for high flow units

Cold Planers, LT Series (Continued next page)

Cold Planer, LT Series

SKID STEER LOADERS/COMPACT TRACK LOADERS

SPECIFICATIONS							
MODEL	**12" Std flow**	**16" Std flow**	**16" HF**	**18" HF**	**24" HF**	**30" HF**	**36" HF**
Operating Weight – lb. (kg)	1135 (515)	1225 (556)	1510 (685)	1560 (708)	1690 (767)	1855 (841)	2015 (914)
Cutting Depth – in. (mm)	0-5 (0-127)	0-5 (0-127)	0-6 (0-152)	0-6 (0-152)	0-6 (0-152)	0-6 (0-152)	0-6 (0-152)
Cutting Width – in. (mm)	12 (305)	16 (406)	16 (406)	18 (457)	24 (610)	30 (762)	36 (914)
Drum Diameter – in. (mm)	18.6 (472)	18.6 (472)	21.9 (556)	21.9 (556)	21.9 (556)	21.9 (556)	21.9 (556)
Tilt	± 15°	± 15°	± 15°	± 15°	± 15°	± 12.5°	± 10°
Side shift – in. (mm)	24 (610)	24 (610)	24 (610)	24 (610)	24 (610)	24 (610)	24 (610)
Hydraulic req. – gpm (l/m)	13-25 (45-95)	16-25 (60-95)	24-45 (91-170)	26-45 (98-170)	28-45 (106-170)	28-45 (106-170)	31-45 (117-170)
Hydraulic req. – psi (bar)	2200-3400 (152-235)	2200-3400 (152-235)	2200-5000 (152-345)	2200-5000 (152-345)	2200-5000 (152-345)	2200-5000 (152-345)	2200-5000 (152-345)
Drive	Direct	Direct	Planetary	Planetary	Planetary	Planetary	Planetary
Controls	Manual w/ hyd side shift diverter valve	Manual w/ hyd side shift diverter valve	Full hydraulic with in-cab controls	Full hydraulic with in-cab controls	Full hydraulic with in-cab controls	Full hydraulic with in-cab controls	Full hydraulic with in-cab controls
No. of Carbide Picks	36	44	48	52	64	76	88

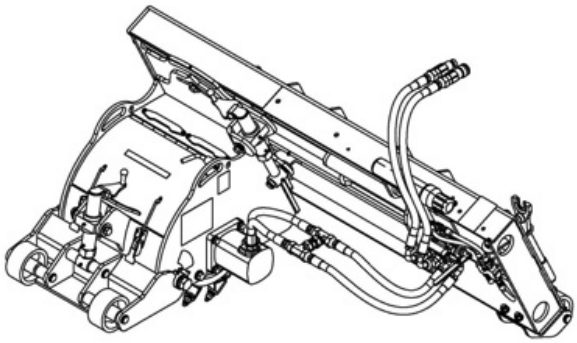

Std Flow

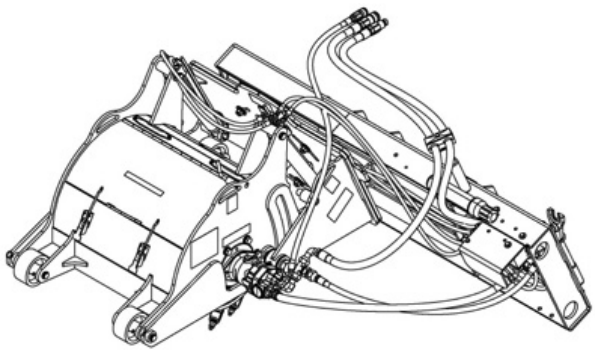

High Flow

Concrete Bucket

SKID STEER LOADERS/COMPACT TRACK LOADERS

Unit includes bucket, mounting bracket, hoses, quick couplers and chute extensions.

	PART NUMBER	WEIGHT LB
C50 CONCRETE BUCKET (1/2 yd cap.)	87398932	492
C75 CONCRETE BUCKET (3/4 yd cap.)	87398933	554

OPTIONAL COMPONENTS – (Order as needed)

90° CHUTE KIT – Allows chute to be positioned for left or right discharge.	48022262	76

MODEL COMPATIBILITY	SR130 SR150 SR160	SR175 SV185	SR200 SR210		SR220 SR240	SV250 SR250 SR270 SV280	SV300 SV340		TR270 TR310	TR320 TR340 TV370 TV450	REQ'D EQUIPMENT					
	410	420	430	440	435	445 450	465	420CT	440CT	445CT 450CT	STD FLOW	HIGH FLOW	CASE DRAIN	FRONT ELEC	DEMO DOOR	2ND AUX
C50 CONCRETE BUCKET	•	•	•	•	•	•	•	•	•	•	R					
C75 CONCRETE BUCKET				•	•	•	•		•	•	R					

FEATURES

- Dispenses concrete safely and easily into column and wall forms
- Quick, clean and accurate placement of concrete without a wheelbarrow
- Hydraulically actuated gate for precise concrete metering
- Removable chute extension
- Safety door keeps co-workers safe from dispensing gate
- 58" wide. Can be easily picked up and transported in a standard 60" bucket
- Optional 90° chute kit

APPLICATIONS

- Ideal for pools and patios

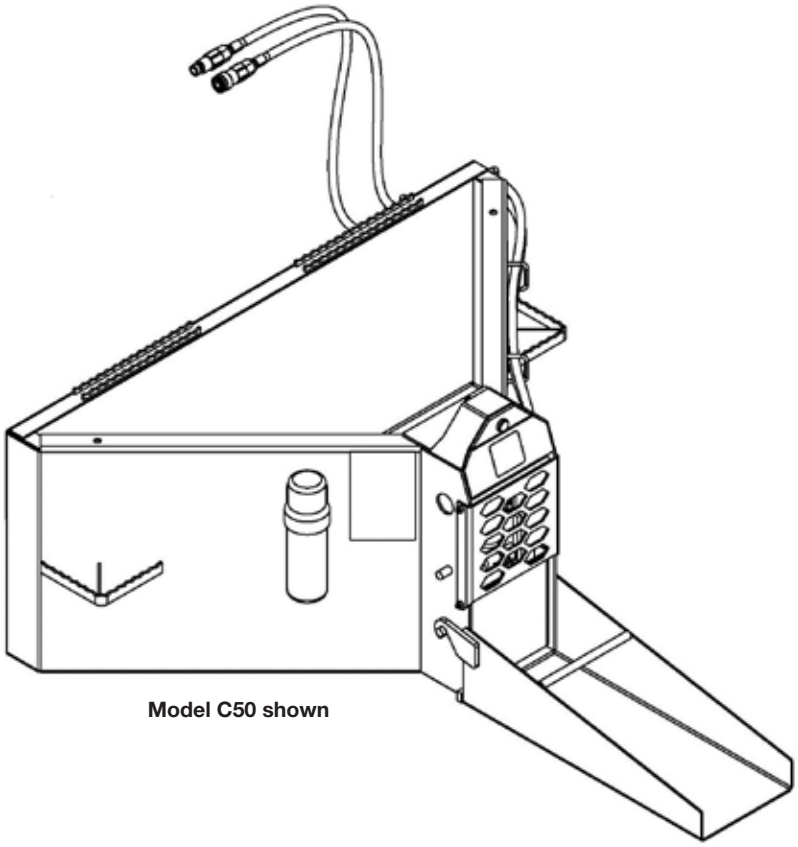

Model C50 shown

Concrete Claw

SKID STEER LOADERS/COMPACT TRACK LOADERS

	PART NUMBER	WEIGHT LB
CONCRETE CLAW	87045489	575

MODEL COMPATIBILITY	SR130 SR150 SR160	SR175 SV185	SR200 SR210	SR220 SR240		SV250 SR250 SR270 SV280	SV300 SV340		TR270	TR310		TR320 TR340 TV370 TV450	REQ'D EQUIPMENT					
	410	420	430	440	435	445 450	465	420CT		440CT	445CT 450CT		STD FLOW	HIGH FLOW	CASE DRAIN	FRONT ELEC	DEMO DOOR	2ND AUX
CONCRETE CLAW	•	•	•	•	•	•	•	•	•	•	•	•						

FEATURES

- Slide the claw teeth under the concrete, lift & load
- Allows for a cleaner, quicker, and more efficient method of concrete removal
- Features name-brand replaceable points with 1-1/2" wide shanks
- Rubberized flex pins securely fasten eplaceable points
- End plates and tooth shanks are made with high strength T-1 steel
- 1" x 8" wear resistant steel tapered cutting edge

APPLICATIONS

- Concrete removal on sidewalks, driveways or any construction site

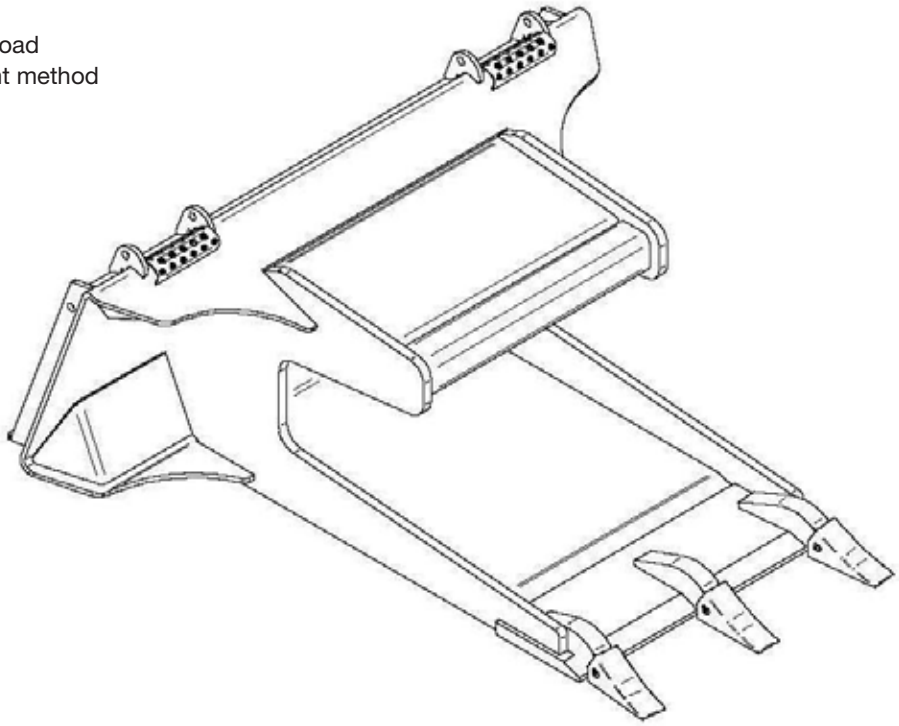

Dozer Blade

SKID STEER LOADERS/COMPACT TRACK LOADERS

STANDARD AUXILIARY BOOM HYDRAULICS REQUIRED	PART NUMBER	WEIGHT LB
PL1300 DOZER BLADE, 72"	87387403	1360
PL1300 DOZER BLADE, 84"	87387404	1440
PL1300 DOZER BLADE, 96"	87387405	1490

BASE UNIT OPTIONS (Must Order One for Complete Unit)

Universal wiring kit (includes full wiring to cab and battery with cab-mounted switch)	87015256	3
Wiring adapter kit (for use with loaders equipped with front electric kit. Includes adapter to 14-pin boom connector).	86602638	2
Wire harness adapter (adapts pre-9/1/2001 75XT, 85XT, 90XT, 95XT w/8-pin connector to 14-pin connector)	87048529	2

MODEL COMPATIBILITY	SR130 SR150 SR160	SR175 SV185	SR200 SR210	SR220 SR240		SV250 SR250 SR270 SV280	SV300 SV340		TR270		TR310	TR320 TR340 TV370 TV450	REQ'D EQUIPMENT					
	410	420	430	440	435	445 450	465	420CT		440CT	445CT 450CT		STD FLOW	HIGH FLOW	CASE DRAIN	FRONT ELEC	DEMO DOOR	2ND AUX
72" DOZER BLADE	•	•	•	•	•			•	•	•			R			O		
84" DOZER BLADE		•	•	•	•	•	•	•	•	•	•	•	R			O		
96" DOZER BLADE			•	•	•	•	•			•	•	•	R			O		

FEATURES

- Rugged, heavy-duty cast moldboard and mounting frame
- Bolt-on reversible cutting edge
- Adjustable skid shoes - standard
- Blade angles 30 degrees left or right
- Blade tilts 10 degrees

APPLICATIONS

- Rough and finish grading as well as light dozing

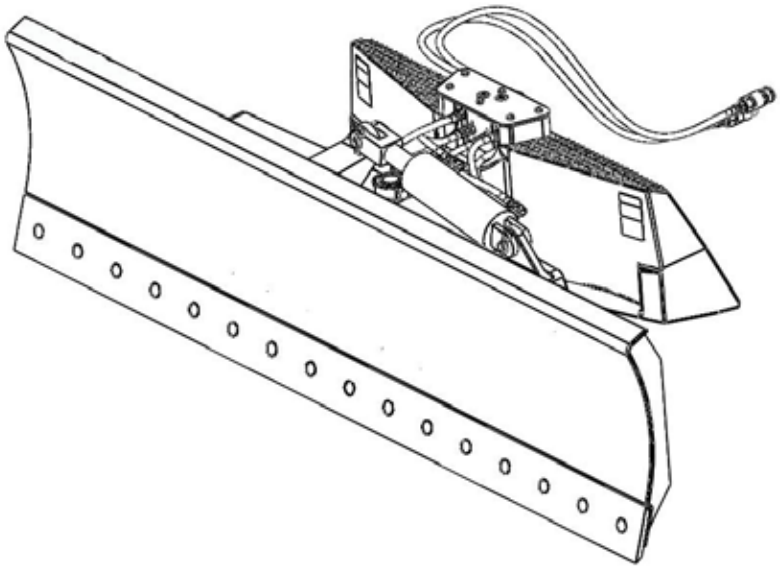

Grading Box, Laser

SKID STEER LOADERS/COMPACT TRACK LOADERS

Unit includes laser-ready grading box, mast pole(s), hoses and quick disconnects.

	PART NUMBER	WEIGHT LB
LASER-READY GRADING BOX (Does not include CASE Site Control laser package)		
72” LASER-READY GRADING BOX, PS-Series, Single Mast	48175187	1685
84” LASER-READY GRADING BOX, PS-Series, Single Mast	48175188	1735
96” LASER-READY GRADING BOX, PS-Series, Single Mast	48175189	1820
72” LASER-READY GRADING BOX, PD-Series, Dual Mast	48175190	2000
84” LASER-READY GRADING BOX, PD-Series, Dual Mast	48175191	2050
96” LASER-READY GRADING BOX, PD-Series, Dual Mast	48175192	2135
LASER-READY GRADING BOX HARNESS/CABLE/BRACKET KIT (Must order one for complete unit)		
KIT, PS SINGLE MAST (harness, cable and bracket)	48175206	9
KIT, PD DUAL MAST (harness, cable and bracket)	48175207	9

MODEL COMPATIBILITY	SR130 SR150 SR160	SR175 SV185	SR200 SR210 SR220	SR240	SV250 SR250 SR270 SV280	SV300 SV340	TR270	TR310	TR320 TR340 TV370 TV450	REQ’D EQUIPMENT					
	410	420	430	440 435	445	450 465	420CT	440CT	445CT 450CT	STD FLOW	HIGH FLOW	CASE DRAIN	FRONT ELEC	DEMO DOOR	2ND AUX
72" LASER-READY GRADING BOX, PS or PD		•	•	•	•		•	•		R		R	R		
84" LASER-READY GRADING BOX, PS or PD		•	•	•	•	•	•	•	•	R		R	R		
96" LASER-READY GRADING BOX, PS or PD				•	•	•		•	•	R		R	R		

Model	Grades	Working Width	Front Capacity	Rear Capacity
PS-72	Depth	72" (1829 mm)	11.5 ft^3 (.33 M^3)	7.0 ft^3 (.20 M^3)
PD-72	Depth and slope			
PS-84	Depth	84" (2134 mm)	13.4 ft^3 (.38 M^3)	8.0 ft^3 (.23 M^3)
PD-84	Depth and slope			
PS-96	Depth	96" (2438 mm)	15.3 ft^3 (.43 M^3)	9.0 ft^3 (.25 M^3)
PD-96	Depth and slope			

Grading Box, Laser (Continued next page)

Grading Box, Laser

SKID STEER LOADERS/COMPACT TRACK LOADERS

FEATURES

- Create highly precise finish grades to within 1/10th of an inch
- Push-pull design grades moving forward and in reverse to utilize the maneuverability of a SSL or CTL and increase productivity
- Front wheel location provides stability, resulting in a smoother grading operation and surface
- Hydraulic valve system adjusts grading box, providing operators with smooth and accurate performance in even the toughest environments
- Composite, greaseless bushings in all pivot points
- Reversible and replaceable cutting edge on all sides; main edges are hinged to allow better penetration when digging
- Large mirror allows operator to view spoil and material in front of box
- Foam-filled tires for flat-free operation
- Universal skid steer mount compatible
- Connect-under-pressure flat face quick couplers
- Durable powder coat finish
- Compatible with CASE Site Control laser control panel, receivers and beacons
- Single or dual mast options (single mast for automated elevation only; dual mast for automated elevation and cross-slope)
- Industry-leading 3-year standard product warranty through CNH Industrial protects the grading box against workmanship and defects not related to wear (1-year standard product warranty through CNH Industrial for hydraulic components)

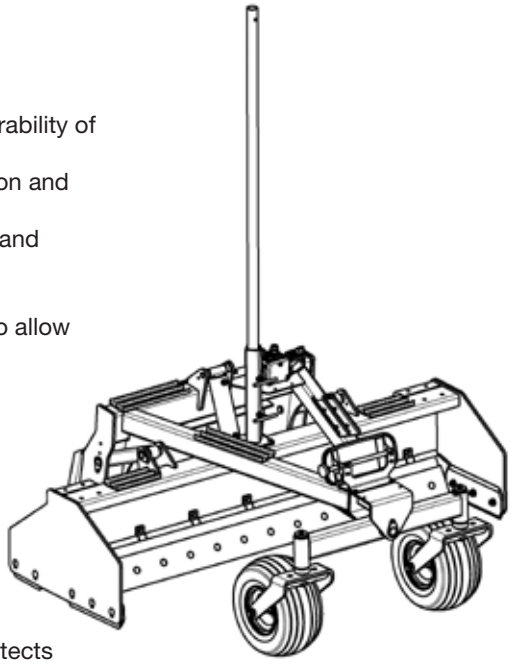

Single Mast (PS)

HOW IT WORKS

- A rotating laser is set for desired grade; the rotating beam of laser light is read by the laser receiver(s) which is mounted to the mast pole
- The beam's location is sent to the control panel which interprets where the beam of light is, in relation to grade
- The control panel then tells the hydraulic valve to adjust the grading box up or down to keep the receiver(s) on grade

APPLICATIONS

- Concrete subgrade
- Athletic fields
- Parking lots, driveways and sidewalks
- Golf course tee boxes and cart paths
- Equestrian riding arenas and rings
- Outdoor tennis and basketball courts
- Other fine grading applications for general excavation, pole barn and storage facility construction

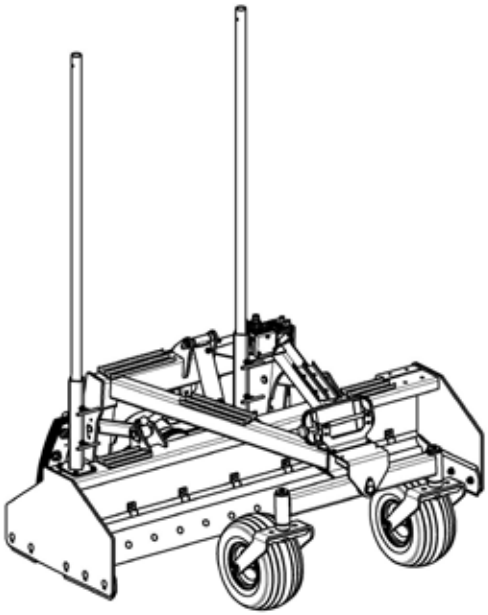

Dual Mast (PD)

REQUIREMENTS FOR OPERATION

- Standard auxiliary hydraulics
- Case drain
- Front electric kit required for laser control package
- Harness/cable/bracket kit for laser-ready grading box
- CASE Site Control laser control panel kit
- CASE Site Control laser receiver kit (single or dual mast)
- CASE Site Control rotating laser beacon (other laser beacon brands may be compatible)

DEALER REQUIREMENTS

- Dealer must be Level 2: 2D On-Machine Systems certified to order CASE Site Control laser component kits and beacons

Grapple, Brush (Construction)

SKID STEER LOADERS/COMPACT TRACK LOADERS

Unit includes hoses and quick disconnects.

	PART NUMBER	WEIGHT LB
72" CONSTRUCTION BRUSH GRAPPLE*	87678207	925
78" CONSTRUCTION BRUSH GRAPPLE*	87678208	999
84" CONSTRUCTION BRUSH GRAPPLE*	87678209	1054
90" CONSTRUCTION BRUSH GRAPPLE*	87678210	1105
72" CONSTRUCTION BRUSH GRAPPLE - LT Series	51422159	885
78" CONSTRUCTION BRUSH GRAPPLE - LT Series	51422160	920
84" CONSTRUCTION BRUSH GRAPPLE - LT Series	51422161	1120

*Compatible with some CWL models

OPTIONAL COMPONENTS (Order as needed)

CYLINDER GUARD KIT - LT Series	51453848	25

MODEL COMPATIBILITY	SR130 SR150 SR160	SR175	SV185	SR200 SR210	SR220 SR240	SV250 SR250 SR270 SV280	SV300 SV340	TR270	TR310		TR320 TR340 TV370 TV450	REQ'D EQUIPMENT					
	410		420	430	435 440	445	450 465	420CT	440CT	445CT 450CT		STD FLOW	HIGH FLOW	CASE DRAIN	FRONT ELEC	DEMO DOOR	2ND AUX
72" CONSTRUCTION BRUSH GRAPPLE			•	•	•	•	•	•	•			R					
78" CONSTRUCTION BRUSH GRAPPLE				•	•	•	•	•	•		•	R					
84" CONSTRUCTION BRUSH GRAPPLE						•	•			•	•	R					
90" CONSTRUCTION BRUSH GRAPPLE						•	•			•	•	R					
72" CONSTRUCTION BRUSH GRAPPLE – LT Series		•	•	•	•	•	•	•	•			R					
78" CONSTRUCTION BRUSH GRAPPLE – LT Series						•	•	•	•	•	•	R					
84" CONSTRUCTION BRUSH GRAPPLE – LT Series					•	•	•		•	•	•	R					

APPLICATIONS

- Open sided design ideal for hauling brush and logs
- Pick up rocks and debris, while leaving dirt behind

Grapple, Brush - Construction (Continued next page)

Grapple, Brush (Construction)

SKID STEER LOADERS/COMPACT TRACK LOADERS

	Construction Brush Grapple	Construction Brush Grapple - LT Series
FEATURES		
Overview	• Full featured grapple comes standard with cushioned cylinders and cylinder guards	• LT Series strikes the right balance between durability and affordability
Sizes	• 72", 78", 84" and 90"	• 72", 78" and 84"
Other Features	• 1-1/4" x 24" grapple pins greatly reduce torsional force • 1-1/4" cylinder pivot pins • 1/2" end plates • Standard load check valve for positive clamp force	• Teflon coated bushings provide lubrication at all pivot locations • Each serrated tine is precision cut from one piece of 1/2" Grade 80 steel, from tip to top brace, to add rigidity • Greasable 1-1/4" diameter cylinder pins and 1-9/16" diameter hinge pins
Cylinders	• Two independent cushioned cylinders – 2" x 8" x 1-1/4"	• Two independent 2" bore, 8-3/8" hydraulic cylinders feature corrosion, dent and flake resistant NitroSteel® cylinder rods
Cylinder Guards	• Standard	• Optional
Finish	• Durable powder coat	• Durable powder coat
Warranty	• 1-year standard product warranty through Paladin for workmanship and defect not related to wear	• 1-year standard product warranty through CNH Industrial for workmanship and defect not related to wear
Parts Available in CNH Depot	• No	• Yes
REQUIREMENTS FOR OPERATION		
	• Standard auxiliary hydraulics	• Standard auxiliary hydraulics
SPECIFICATIONS		
Unit Includes	• Hoses and quick disconnects	• Hoses and quick disconnects
Material Yield Strength	• 100K PSI	• 80K PSI
Tine Spacing	• 6"	• 5-1/2"
Throat Opening	• Open – 40" / Closed – 16-1/2"	• Open – 36-1/2" / Closed – 21-3/10"
Overall Depth	• 39"	• 39-9/10"
Manufacturer	• Paladin	• Virnig

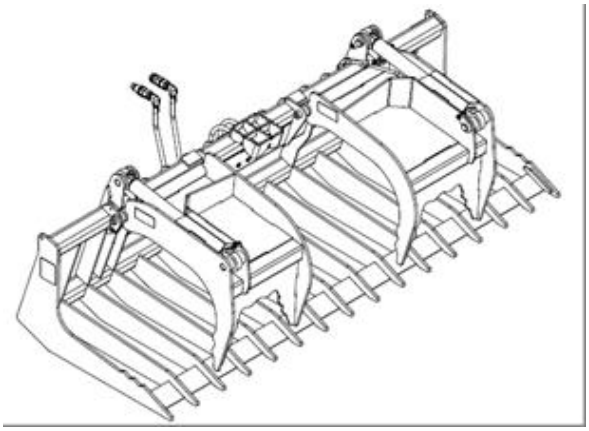

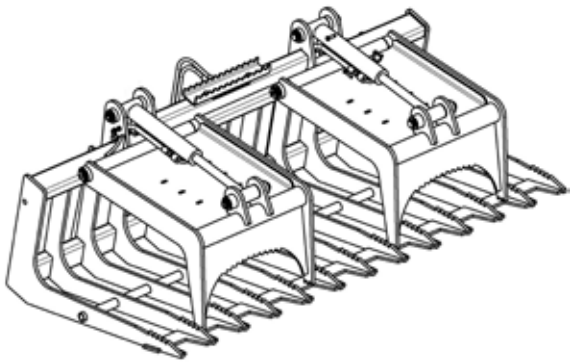

Grapple, Brush (Utility)

SKID STEER LOADERS/COMPACT TRACK LOADERS

Unit includes hoses and quick disconnects.

	PART NUMBER	WEIGHT LB
66” UTILITY BRUSH GRAPPLE	47443896	810
72” UTILITY BRUSH GRAPPLE	47443897	845
72” UTILITY BRUSH GRAPPLE - LT Series	51422158	800

OPTIONAL COMPONENTS (Order as needed)

CYLINDER GUARD KIT - LT Series	51453848	25

MODEL COMPATIBILITY	SR130	SR150 SR160	SR175 SV185	SR200 SR210	SR220 SR240	SV250 SR250 SR270 SV280	SV300 SV340		TR270 TR310	TR320 TR340 TV370 TV450	REQ’D EQUIPMENT					
		410	420	430	435 440	445	450 465	420CT	440CT	445CT 450CT	STD FLOW	HIGH FLOW	CASE DRAIN	FRONT ELEC	DEMO DOOR	2ND AUX
66” UTILITY BRUSH GRAPPLE	•	•	•					•			R					
72” UTILITY BRUSH GRAPPLE		•	•	•				•			R					
72” UTILITY BRUSH GRAPPLE - LT Series	•	•	•	•	•						R					

APPLICATIONS

- Open sided design ideal for picking up/hauling brush and logs, while leaving dirt behind

Grapple, Brush - Utility (Continued next page)

Grapple, Brush (Utility)

SKID STEER LOADERS/COMPACT TRACK LOADERS

	Utility Brush Grapple	Utility Brush Grapple - LT Series
FEATURES		
Overview	• Full featured grapple comes standard with cushioned cylinders and cylinder guards	• LT Series strikes the right balance between durability and affordability
Sizes	• 66" and 72"	• 72"
Other Features	• 1-1/4" x 24" grapple pins greatly reduce torsional force • 1-1/4" cylinder pivot pins • 3/8" end plates • Standard load check valve for positive clamp force	• Teflon coated bushings provide lubrication at all pivot locations • Each serrated tine is precision cut from one piece of 1/2" Grade 50 steel, from tip to top brace, to add rigidity • Greasable 1-1/4" diameter cylinder pins and hinge pins
Cylinders	• Two independent cushioned and sleeved cylinders – 2" x 8" x 1-1/4"	• Two independent 2" bore, 8-3/8" hydraulic cylinders feature corrosion, dent and flake resistant NitroSteel® cylinder rods
Cylinder Guards	• Standard	• Optional
Finish	• Durable powder coat	• Durable powder coat
Warranty	• 1-year standard product warranty through Paladin for workmanship and defect not related to wear	• 1-year standard product warranty through CNH Industrial for workmanship and defect not related to wear
Parts Available in CNH Depot	• No	• Yes
REQUIREMENTS FOR OPERATION		
	• Standard auxiliary hydraulics	• Standard auxiliary hydraulics
SPECIFICATIONS		
Unit Includes	• Hoses and quick disconnects	• Hoses and quick disconnects
Material Yield Strength	• 100K PSI	• 50K PSI
Tine Spacing	• 6"	• 8-1/2"
Throat Opening	• Open – 29" / Closed – 17-3/8"	• Open – 35-1/2" / Closed – 20-3/10"
Overall Depth	• 36"	• 36-9/10"
Manufacturer	• Paladin	• Virnig

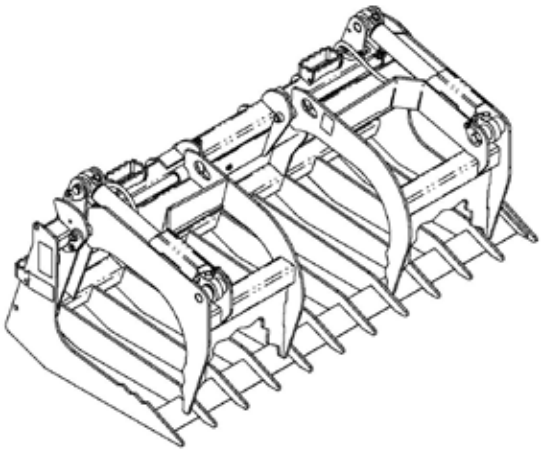

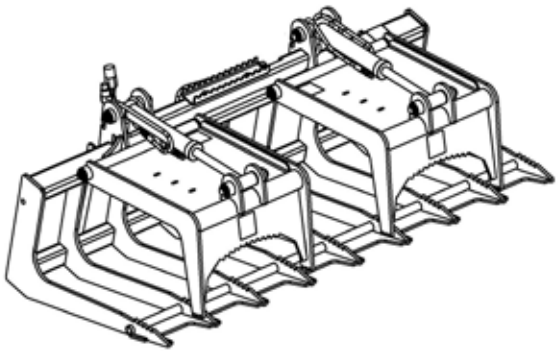

Grapple, Farm

SKID STEER LOADERS/COMPACT TRACK LOADERS

Unit includes hoses and quick disconnects.

	PART NUMBER	WEIGHT LB
Large Capacity Farm Grapple – 72" (1830 mm)	51498695	1165
Large Capacity Farm Grapple – 84" (2130 mm)	51498696	1265
Large Capacity Farm Bucket Grapple – 72" (1830 mm)	51498699	1440
Large Capacity Farm Bucket Grapple – 84" (2130 mm)	51498700	1520

MODEL COMPATIBILITY	SR130 SR150 SR160	SR175 SV185 SR200 SR210	SR220 SR240	SV250 SR250 SR270 SV280	SV300 SV340	TR270	TR310	TR320 TR340 TV370 TV450	REQ'D EQUIPMENT					
	410	420 430	435 440	445	450 465	420CT	440CT	445CT 450CT	STD FLOW	HIGH FLOW	CASE DRAIN	FRONT ELEC	DEMO DOOR	2ND AUX
Large Capacity Farm Grapple – 72"				•	•		•	•	R					
Large Capacity Farm Grapple – 84"				•	•			•	R					
Large Capacity Farm Bucket Grapple – 72"				•	•		•	•	R					
Large Capacity Farm Bucket Grapple– 84"				•	•			•	R					

FEATURES

- Large Capacity Farm Grapple features an open bottom and back providing excellent visibility while allowing smaller debris to fall through
- Large Capacity Farm Bucket Grapple features five 1/2" x 4" structural wear bars under bucket for added strength
- Two-cylinder grapple with large jaw opening allows handling of big round bales, four 1/2" Grade 80 curved tines (80K PSI yield strength steel) penetrate bales with minimal damage (may be used with twine or net wrapping but should not be used with plastic wrap to prevent tearing)
- Two independent 2" bore, 8-3/8" hydraulic cylinders feature corrosion, dent and flake resistant NitroSteel® cylinder rods
- Greasable hinge pins and cylinder pins
- Teflon coated bushings provide lubrication at all pivot locations
- Durable powder coat finish
- 1-year standard product warranty through CNH Industrial
- Replacement and wear parts supported in our depot network

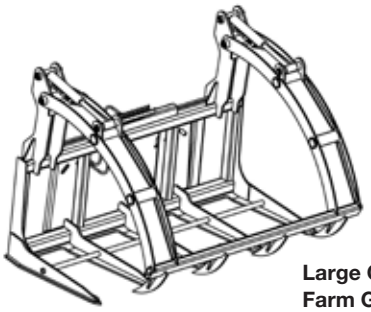

Large Capacity Farm Grapple

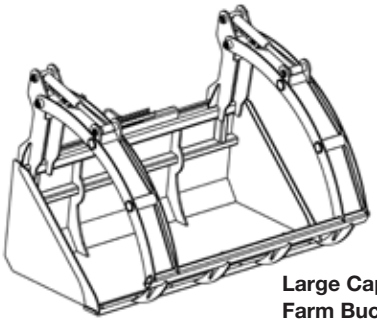

Large Capacity Farm Bucket Grapple

APPLICATIONS

- Effectively handle and transport large, loose round bales
- Move brush and loose materials
- Perform multiple farm chores

REQUIREMENTS FOR OPERATION

- Standard auxiliary hydraulics

ACCESSORIES	
Width	Bolt-on Edge for bucket
72"	86577169
84"	86577173

SPECIFICATIONS				
	Large Capacity Farm Grapple 72"	Large Capacity Farm Grapple 84"	Large Capacity Farm Bucket Grapple 72"	Large Capacity Farm Bucket Grapple 84"
Width	74.0" (1880 mm)	86.0" (2184 mm)	73-1/2" (1867 mm)	85-1/2" (2172 mm)
Depth	40-4/5" (1036 mm)		40.0" (1016 mm)	
Height	30-4/5" (782 mm)		31-2/5" (798 mm)	
Number of tines	5	6	—	—
Grapple jaw opening	73-2/5" (1864 mm)		74-3/10" (1887 mm)	
Number of grapple teeth	4	4	4	4
Bucket capacity (heaped)	—	—	33.2 ft^3 (.94 M^3)	38.8 ft^3 (1.1 M^3)
Operating weight	1050 lbs. (476 kg)	1150 lbs. (522 kg)	1325 lbs. (601 kg)	1405 lbs. (637 kg)

Grapple, Large Capacity

SKID STEER LOADERS/COMPACT TRACK LOADERS

Unit includes hoses and quick disconnects.

	PART NUMBER	WEIGHT LB
GRAPPLE, LARGE CAPACITY – 72" (1830 mm)	51498737	1665
GRAPPLE, LARGE CAPACITY – 84" (2130 mm)	51498738	1765

MODEL COMPATIBILITY	SR130 SR150 SR160	SR175 SV185 SR200 SR210	SR220 SR240	SV250 SR250 SR270 SV280	SV300 SV340	TR270	TR310	TR320 TR340 TV370 TV450	REQ'D EQUIPMENT					
	410	420 430	435 440	445	450 465	420CT	440CT	445CT 450CT	STD FLOW	HIGH FLOW	CASE DRAIN	FRONT ELEC	DEMO DOOR	2ND AUX
GRAPPLE, LARGE CAPACITY – 72"				•	•		•	•	R					
GRAPPLE, LARGE CAPACITY – 84"				•	•			•	R					

FEATURES

- Fully utilizes the increased capacity of large CASE machines to get jobs done faster
- Open bottom and back providing excellent visibility while allowing smaller debris to fall through
- Heavy-duty 1/2" Grade 80 steel tines and 1/2" Grade 50 steel outer jaw tines
- Fully gusseted tine tips for added strength
- Two independent 2-1/2" bore, 8-3/8" hydraulic cylinders feature corrosion, dent and flake resistant NitroSteel® cylinder rods
- Teflon® coated bushings provide lubrication at all pivot locations
- Comes standard with cylinder guards
- Greasable 1-9/16" diameter hinge pins and 1-1/4" cylinder pins
- Durable powder coat finish
- 1-year standard product warranty through CNH Industrial
- Replacement and wear parts supported in our depot network

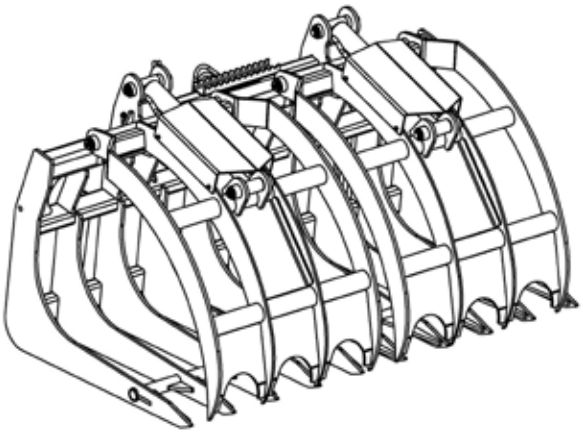

APPLICATIONS

- Works well for bulky material where smaller debris can fall through the grapple bottom
- Independent grapple opens over 5 feet for large jobs and grabbing odd-shaped materials with ease
- Perfect for clearing tree lines and wooded lots after felling

SPECIFICATIONS		
	72"	84"
Width	73.0" (1854 mm)	85.0" (2159 mm)
Depth	46.0" (1168 mm)	
Height	33-4/5" (859 mm)	
Number of tines	10	12
Grapple jaw opening	62-4/5" (1595 mm)	
Operating weight	1550 lbs. (703 kg)	1650 lbs. (748 kg)

Grapple, Log

SKID STEER LOADERS/COMPACT TRACK LOADERS

STANDARD AUXILIARY BOOM HYDRAULICS REQUIRED	PART NUMBER	WEIGHT LB
LOG GRAPPLE	87382066	650

MODEL COMPATIBILITY	SR130 SR150 SR160	SR175 SV185	SR200 SR210	SR220 SR240		SV250 SR250 SR270 SV280	SV300 SV340		TR270	TR310		TR320 TR340 TV370 TV450	REQ'D EQUIPMENT					
	410	420	430	440	435	445 450	465	420CT		440CT	445CT 450CT		STD FLOW	HIGH FLOW	CASE DRAIN	FRONT ELEC	DEMO DOOR	2ND AUX
LOG GRAPPLE	•	•	•	•	•	•	•	•	•	•	•	•	R					

FEATURES

- Excellent attachment for handling logs, piles, brush, and other bulky materials
- 2" x 8" hydraulic cylinders
- Closes to 6" log or pipe
- 43-1/8" open height
- 29-1/2" fork length

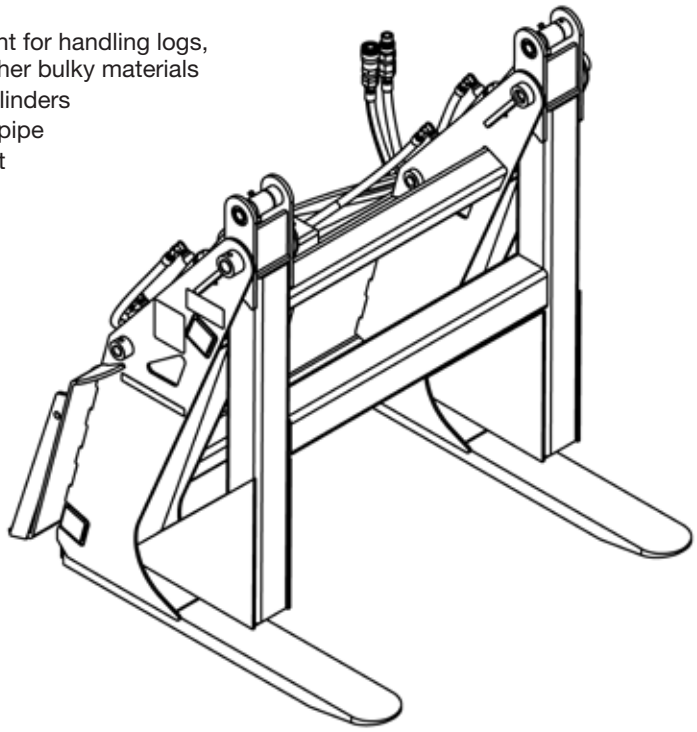

Grapple, Scrap (Construction)

SKID STEER LOADERS/COMPACT TRACK LOADERS

Unit includes hoses and quick disconnects.

	PART NUMBER	WEIGHT LB
76" CONSTRUCTION SCRAP GRAPPLE*	87677288	1081
82" CONSTRUCTION SCRAP GRAPPLE*	87677289	1133
88" CONSTRUCTION SCRAP GRAPPLE*	87677290	1180
78" CONSTRUCTION SCRAP GRAPPLE - LT Series	51422157	1120

*Compatible with some CWL models

OPTIONAL COMPONENTS (Order as needed)

CYLINDER GUARD KIT - LT Series	51453848	25

MODEL COMPATIBILITY	SR130 SR150 SR160	SR175 SV185	SR200 SR210		SR220 SR240	SV250 SR250 SR270 SV280	SV300 SV340	TR270	TR310		TR320 TR340 TV370 TV450	REQ'D EQUIPMENT					
	410	420	430	435	440	445	450 465	420CT	440CT	445CT 450CT		STD FLOW	HIGH FLOW	CASE DRAIN	FRONT ELEC	DEMO DOOR	2ND AUX
76" CONSTRUCTION SCRAP GRAPPLE			•	•	•	•	•	•	•		•	R					
82" CONSTRUCTION SCRAP GRAPPLE						•	•		•		•	R					
88" CONSTRUCTION SCRAP GRAPPLE						•	•			•	•	R					
78" CONSTRUCTION SCRAP GRAPPLE - LT Series																	

ACCESSORIES	
Width	Bolt-on Edge
76"	86577171
82"	86577173
88"	85999108

APPLICATIONS

- Grab and secure large, bulky scrap and waste material

Grapple, Scrap - Construction (Continued next page)

Grapple, Scrap (Construction)

SKID STEER LOADERS/COMPACT TRACK LOADERS

	Construction Scrap Grapple	Construction Scrap Grapple - LT Series
FEATURES		
Overview	• Full featured grapple comes standard with cushioned cylinders and cylinder guards	• LT Series strikes the right balance between durability and affordability
Sizes	• 76", 82" and 88"	• 78"
Other Features	• 1-1/4" x 24" grapple pins greatly reduce torsional force • 1-1/4" cylinder pivot pins • 1/2" end plates • Standard load check valve for positive clamp force	• Solid bottom constructed from 1/4" Grade 50 steel • Four 1/2" thick vertical braces and a welded brace plate inside the bucket for added strength • Teflon coated bushings provide lubrication at all pivot locations • Greasable 1-1/4" diameter cylinder pins and 1-9/16" diameter hinge pins
Cylinders	• Two independent cushioned cylinders – 2" x 8" x 1-1/4"	• Two independent 2" bore, 8-3/8" hydraulic cylinders feature corrosion, dent and flake resistant NitroSteel® cylinder rods
Cylinder Guards	• Standard	• Optional
Bolt-On Edge	• Bucket edge drilled for replaceable edge	• 3/4" x 6" weld-on cutting edge with holes to accept 78" bolt-on edge
Finish	• Durable powder coat	• Durable powder coat
Warranty	• 1-year standard product warranty through Paladin for workmanship and defect not related to wear	• 1-year standard product warranty through CNH Industrial for workmanship and defect not related to wear
Parts Available in CNH Depot	• No	• Yes
REQUIREMENTS FOR OPERATION		
	• Standard auxiliary hydraulics	• Standard auxiliary hydraulics
SPECIFICATIONS		
Unit Includes	• Hoses and quick disconnects	• Hoses and quick disconnects
Throat Opening	• Open – 40" / Closed – 20"	• Open – 38-4/5" / Closed – 22-1/2"
Overall Depth	• 38"	• 37"
Manufacturer	• Paladin	• Virnig

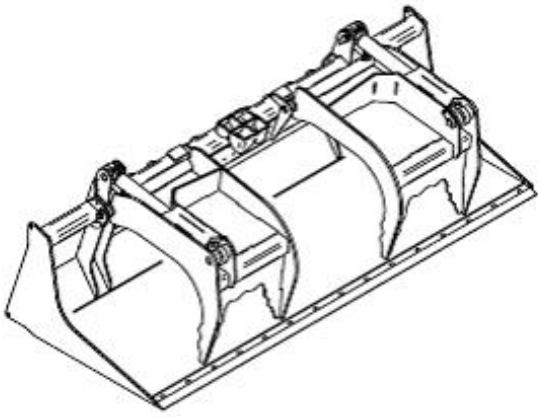

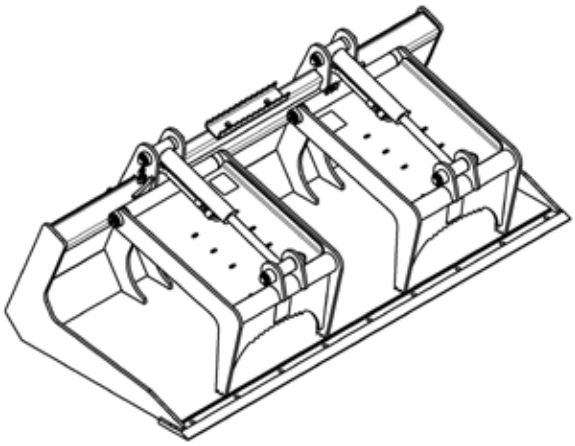

Grapple, Scrap (Utility)

SKID STEER LOADERS/COMPACT TRACK LOADERS

Unit includes hoses and quick disconnects.

	PART NUMBER	WEIGHT LB
60" UTILITY SCRAP GRAPPLE	47443888	808
66" UTILITY SCRAP GRAPPLE	47443890	858
72" UTILITY SCRAP GRAPPLE	47443892	905

MODEL COMPATIBILITY	SR130 SR150 SR160		SR175 SV185		SR200 SR210		SR220 SR240	SV250 SR250 SR270 SV280	SV300 SV340		TR270	TR310		TR320 TR340 TV370 TV450	REQ'D EQUIPMENT					
		410 420		430		440	435	445 450	465	420CT		440CT	445CT 450CT		STD FLOW	HIGH FLOW	CASE DRAIN	FRONT ELEC	DEMO DOOR	2ND AUX
60" UTILITY SCRAP GRAPPLE	•	•													R					
66" UTILITY SCRAP GRAPPLE	•	•	•		•					•					R					
72" UTILITY SCRAP GRAPPLE		•	•	•	•	•				•					R					

FEATURES

- Includes hoses and quick disconnects
- Dual independent grapples
- Standard cylinder guards protect all cylinder components
- Standard load check valve for positive clamp force
- 1-1/4" cylinder pivot pins
- 1-1/4" x 24" grapple pins reduce torsional force
- 3/8" end plates
- Cushioned cylinders – 2" x 8" x 1-1/4"
- Bucket edge drilled for replaceable edge
- Throat opening grapple open – 34"
- Throat opening grapple closed – 19-3/4"
- Overall Depth – 36"

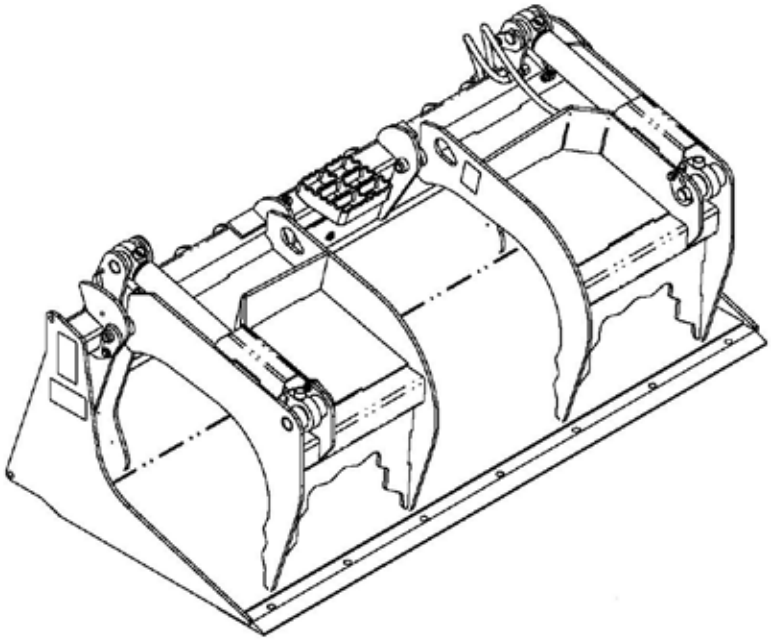

ACCESSORIES	
Width	Bolt-on Edge
60"	86577165
66"	86577167
72"	86577169

Harley Power Box Rake®

SKID STEER LOADERS/COMPACT TRACK LOADERS

Unit includes rake head, angling mounting frame, hoses and quick disconnects.

STANDARD AUXILIARY BOOM HYDRAULICS REQUIRED	PART NUMBER	WEIGHT LB
POWER BOX RAKE, 72" MANUAL ANGLE	84160162	1150
POWER BOX RAKE, 72" HYDR ANGLE	84160163	1175
POWER BOX RAKE, 84" MANUAL ANGLE	84160164	1350
POWER BOX RAKE, 84" HYDR ANGLE	84160165	1400
POWER BOX RAKE, 90" MANUAL ANGLE	84160166	1620
POWER BOX RAKE, 90" HYDR ANGLE	84160167	1670

ADDITIONAL COMPONENTS (Must order Electric Control Kit for hyd. angle units)

Electric Control Kit for loaders not equipped with factory Front Electric kit.	84372934	5
Electric Control Kit for loaders equipped with new style Front Electric kit w/14 pin round connector	87023319	2
Electric Control Kit for loaders equipped with previous XT-style Front Electric kit 305359A1 w/8 pin rectangular connector	87383458	2

MODEL COMPATIBILITY	SR130 SR150 SR160	SR175 SV185	SR200 SR210	SR220 SR240		SV250 SR250 SR270 SV280	SV300 SV340		TR270	TR310		TR320 TR340 TV370 TV450	REQ'D EQUIPMENT					
	410	420	430	440	435	445 450	465	420CT		440CT	445CT 450CT		STD FLOW	HIGH FLOW	CASE DRAIN	FRONT ELEC	DEMO DOOR	2ND AUX
72" HARLEY BOX RAKE (MAN)	•	•	•	•	•	•		•	•				R					
72" HARLEY BOX RAKE (HYD)	•	•	•	•	•	•		•	•				R			O		
84" HARLEY BOX RAKE (MAN)		•	•	•	•	•	•	•	•	•		•	R					
84" HARLEY BOX RAKE (HYD)		•	•	•	•	•	•	•	•	•		•	R			O		
90" HARLEY BOX RAKE (MAN)				•	•	•	•		•	•	•	•	R					
90" HARLEY BOX RAKE (HYD)				•	•	•	•		•	•	•	•	R			O		

FEATURES

- Powered by standard skid steer auxiliary hydraulics
- Hydraulic motor drive
- Operates in forward and reverse
- Reversible end plates
- Adjustable dual gauge wheels
- Carbide tipped teeth
- Flat face hydraulic quick disconnects included
- Hoses included

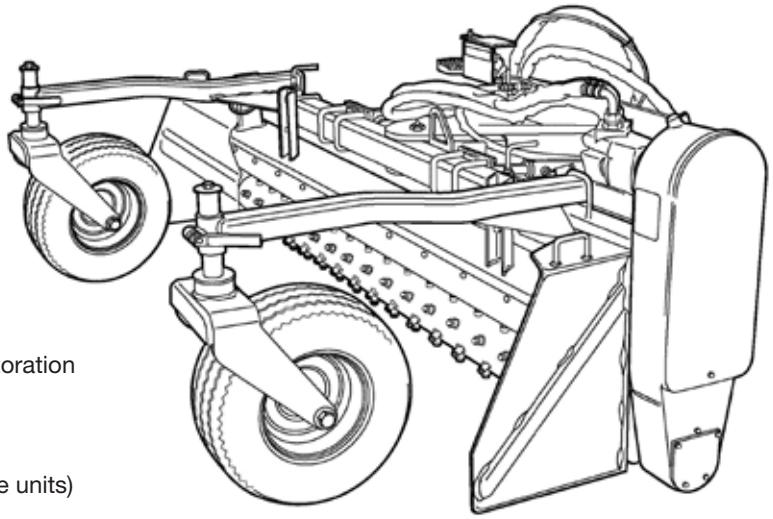

APPLICATIONS

- Ideal for seedbed preparation, landscaping, trench restoration

REQUIREMENTS FOR OPERATION

- Standard auxiliary hydraulics, 11 to 20 GPM
- Auxiliary front electric control kit (optional for hyd. angle units)

Unit includes hammer body, side plates, SSL mounting bracket, hoses, quick disconnects and moil point.

	PART NUMBER	WEIGHT LB
CH-2M HYDRAULIC HAMMER with single position mounting bracket	47450996	679
CH-2M HYDRAULIC HAMMER with 3 position mounting bracket	47450997	699
CH-3M HYDRAULIC HAMMER with single position mounting bracket	47450998	794
CH-3M HYDRAULIC HAMMER with 3 position mounting bracket	47450999	814
CH-4M HYDRAULIC HAMMER with single position mounting bracket	47451000	911
CH-4M HYDRAULIC HAMMER with 3 position mounting bracket	47451002	931
CH-5M HYDRAULIC HAMMER with single position mounting bracket	47451003	1128

ADDITIONAL COMPONENTS (Optional)

Auto Lube Kit - fits CH-2M to CH-5M	47766709	9

ADDITIONAL COMPONENTS for CH-2M (Order as needed)

Moil Point (1 included with base hammer)	47451007	15
Chisel Point	47451008	17
Blunt Point	47451009	17
Frost Wedge (2.0" wide)	47451010	22
Asphalt Cutter (6" wide)	47451011	36
Tamping pad (8" X 8")	47451012	43

ADDITIONAL COMPONENTS for CH-3M (Order as needed)

Moil Point (1 included with base hammer)	47451018	26
Chisel Point	47451019	26
Blunt Point	47451021	28
Frost Wedge (2.3" wide)	47451022	39
Asphalt Cutter (6" wide)	47451023	36
Tamping pad (12" X 12")	47451024	119

ADDITIONAL COMPONENTS for CH-4M (Order as needed)

Moil Point (1 included with base hammer)	47451026	33
Chisel Point	47451027	33
Blunt Point	47451028	36
Frost Wedge (2.5" wide)	47451029	42
Asphalt Cutter (6" wide)	47451030	42
Tamping pad (12" X 12")	47451031	126

ADDITIONAL COMPONENTS for CH-5M (Order as needed)

Moil Point (1 included with base hammer)	47451037	48
Chisel Point	47451039	53
Blunt Point	47451040	51
Asphalt Cutter (6" wide)	47451041	71
Tamping pad (12" X 12")	47451042	130

Hydraulic Hammer (Continued next page)

Hydraulic Hammer

SKID STEER LOADERS/COMPACT TRACK LOADERS

MODEL COMPATIBILITY	SR130	SR150 SR160	SR175 SV185	SR200 SR210	SR220 SR240		SV250 SR250 SR270 SV280	SV300 SV340		TR270 TR310			TR320 TR340 TV370 TV450	REQ'D EQUIPMENT					
		410	420	430	440	435	445 450	465	420CT		440CT	445CT 450CT		STD FLOW	HIGH FLOW	CASE DRAIN	FRONT ELEC	DEMO DOOR	2ND AUX
CH-2M HYDRAULIC HAMMER	•	•	•	•										R				R	
CH-3M HYDRAULIC HAMMER		•	•	•	•	•	•	•	•	•	•	•	•	R				R	
CH-4M HYDRAULIC HAMMER			•	•	•	•	•	•	•	•	•	•	•	R				R	
CH-5M HYDRAULIC HAMMER					•	•	•	•			•	•	•	R				R	

FEATURES

- Only 2 moving parts (piston and control valve) means less maintenance
- Will not dry-fire
- Low pressure gas charge
- Low recoil
- Low hydraulic surge
- Dual tool retainer pins
- Hoses and quick disconnects included
- Moil Point included
- Gas recharge kit included
- Operation/Service Parts Manual
- 3 Year Warranty
- Uses standard auxiliary hydraulics

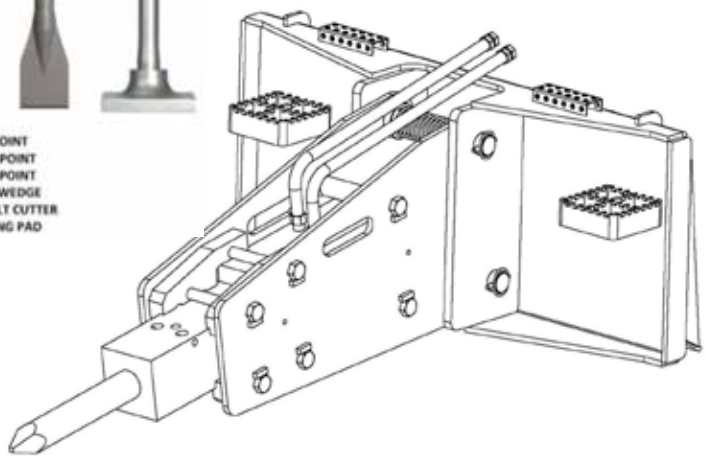

APPLICATIONS

- Demolition, construction, road maintenance

REQUIREMENTS FOR OPERATION

- Standard auxiliary hydraulics
- Demolition door

SPECIFICATIONS				
	CH-2M	CH-3M	CH-4M	CH-5M
Impact class (ft-lb)	250	350	550	825
Blows per min.	600-1150	550-1000	580-1060	550-1000
Operating wt. – lbs. (kg)	512-552 (232-250)	780-800 (354-363)	879-899 (399-408)	1076 (488)
Tool diam. – in. (mm)	2.0 (51)	2.3 (58)	2.5 (64)	3.0 (76)
Input flow – gpm (l/min)	5.3-9.2 (20-35)	6.6-12 (25-45)	8-14.5 (30-55)	9.2-16 (35-61)

HAMMER ORDERING GUIDE			
Mounting configuration		Hammer Model	Hammer Part. No.
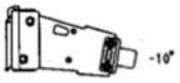	Single position mount bracket	CH-2M	47450996
		CH-3M	47450998
		CH-4M	47451000
		CH-5M	47451003
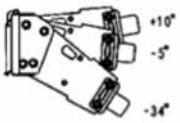	3 position mount bracket	CH-2M	47450997
		CH-3M	47450999
		CH-4M	47451002

Lift Boom

SKID STEER LOADERS/COMPACT TRACK LOADERS

	PART NUMBER	WEIGHT LB
LIFT BOOM 6'	87381819	400

MODEL COMPATIBILITY	SR130 SR150 SR160	SR175 SV185	SR200 SR210	SR220 SR240		SV250 SR250 SR270 SV280	SV300 SV340		TR270	TR310		TR320 TR340 TV370 TV450	REQ'D EQUIPMENT					
	410	420	430	440	435	445 450	465	420CT		440CT	445CT 450CT		STD FLOW	HIGH FLOW	CASE DRAIN	FRONT ELEC	DEMO DOOR	2ND AUX
LIFT BOOM 6'	•	•	•	•	•	•	•	•	•	•	•	•						

FEATURES

- Overall Width: 47"
- Loading Depth: 25.1"
- Depth: 31"
- Overall height: 73.2"
- Reach: 83.1"
- Adds 6.5 ft additional reach to loader

APPLICATIONS

- Ideal for moving trees/shrubs for transplanting
- Use to load and unload attachments, etc.
- Ideal for placing and removing concrete forms

Vertical Mast

(70% of Operating Load, not to exceed 6,000 pounds)

Maximum Reach

(30% of Operating Load, not to exceed 6,000 pounds)

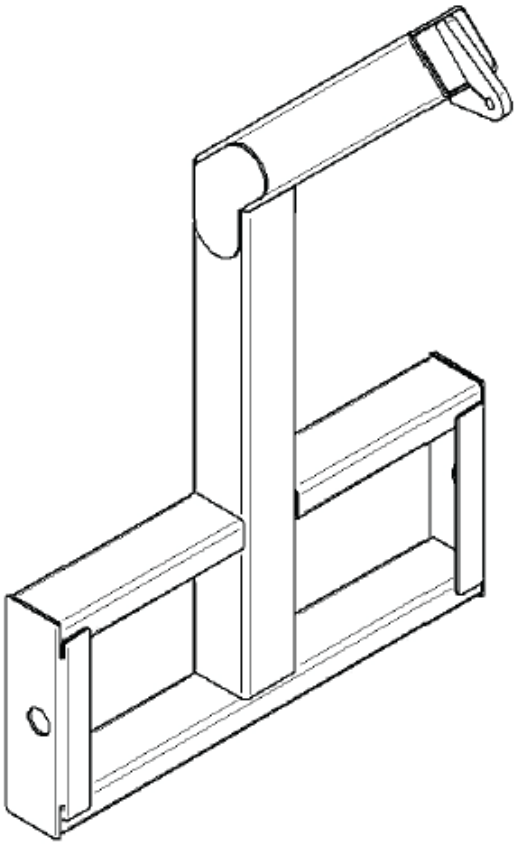

Load Monitor

SKID STEER LOADERS/COMPACT TRACK LOADERS

	PART NUMBER	WEIGHT LB
WEIGHLOG 100 LOAD MONITOR (XT, 400 Series)	84316807	12
WEIGHLOG 200 LOAD MONITOR (XT, 400 Series)	84316808	14
WEIGHLOG 100 LOAD MONITOR (Alpha Series)	84512810	12
WEIGHLOG 200 LOAD MONITOR (Alpha Series)	84512811	14

ADDITIONAL EQUIPMENT (Order as needed)

PRINTER KIT - for WEIGHLOG 200 Only	84316810	1

MODEL COMPATIBILITY	410 420	430 440	435 445	450 465	420CT 440CT	445CT 450CT	SR130 SR150 SR160	SR175 SV185	SR200 SR210 SR220 SR240	SV250 SR250 SR270 SV280	SV300 SV340	TR270 TR310	TR320 TR340 TV370 TV450
WEIGHLOG 100 - 84316807	•	•	•	•	•	•							
WEIGHLOG 200 - 84316808	•	•	•	•	•	•							
WEIGHLOG 100 - 84512810							•	•	•	•	•	•	•
WEIGHLOG 200 - 84512811							•	•	•	•	•	•	•

FEATURES

- Static or dynamic weighing
- 5 individual display channels
- Proven sensor technology
- Backlit LCD graphic display and keypad
- Measures, displays and records net weight based on lift system pressure
- Calibrate for any bucket, pallet fork, etc.
- Internal audible alarm
- Kit comes complete with:
  - Head unit
  - Heavy duty load sensor
  - Hydraulic fitting kit
  - Reference/direction sensors
  - Remote enter button
  - Installation kit
- WeighLog is not certified for legal sale of goods

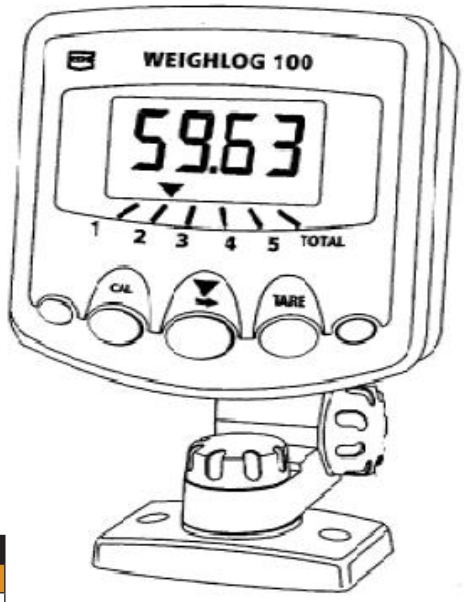

SPECIFICATIONS		
MODEL	**WL100**	**WL200**
Operating Voltage	11 - 30 vdc	
Temperature Range	32°-102°F (0°-50°C)	
System Accuracy	±2% (or better)	
Pressure Range	0-4350 psi (0-250 bar)	
Speed Compensated Dynamic Weighing	No	Yes
Printer Compatible	No	Yes
Warranty	1 year/parts	

Manure Forks and Manure Forks with Grapple

SKID STEER LOADERS/COMPACT TRACK LOADERS

STANDARD AUXILIARY BOOM HYDRAULICS REQUIRED (for Grapple Option Only)	PART NUMBER	WEIGHT LB
MANURE FORK, 60"	84218741	500
MANURE FORK, 66"	84218742	515
MANURE FORK, 72"	84218743	525
MANURE FORK, 84"	84218744	575

OPTIONS

Kit, Grapple Attachment (requires standard auxiliary hydraulics)	84218745	130

MODEL COMPATIBILITY	SR130 SR150 SR160	SR175	SV185	SR200 SR210	SR220 SR240		SV250 SR250 SR270 SV280	SV300 SV340		TR270	TR310		TR320 TR340 TV370 TV450	REQ'D EQUIPMENT					
	410	420		430	440	435	445 450	465	420CT		440CT	445CT 450CT		STD FLOW	HIGH FLOW	CASE DRAIN	FRONT ELEC	DEMO DOOR	2ND AUX
60" MANURE FORK	•	•												O					
66" MANURE FORK	•	•	•	•	•	•	•	•	•	•				O					
72" MANURE FORK		•	•	•	•	•	•	•	•	•	•	•	•	O					
84" MANURE FORK					•	•	•	•			•	•	•	O					

FEATURES

- All standard fork attachments are grapple-ready
- Heavy duty forged tines
- Single, heavy duty cylinder for grapple option
- Overall depth – 30"
- Grapple opening – 37"
- Overall height – 25"

APPLICATIONS

- Moves loose hay and manure
- Clean-up and transport branches, brush and limbs

REQUIREMENTS FOR OPERATION

- Standard auxiliary hydraulics for optional grapple

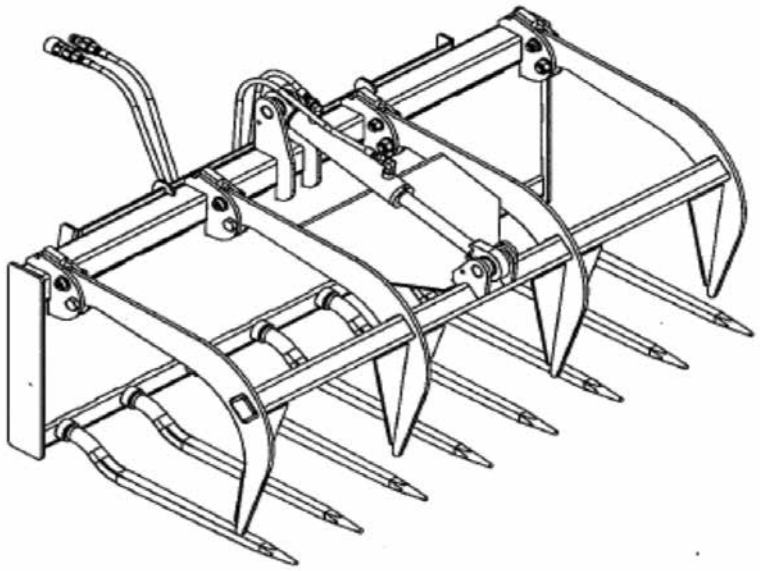

Manure Scraper

SKID STEER LOADERS/COMPACT TRACK LOADERS

	PART NUMBER	WEIGHT LB
MANURE SCRAPER, 60"	84225459	376
MANURE SCRAPER, 72"	84225460	413
MANURE SCRAPER, 84"	84225461	472
MANURE SCRAPER, 96"	84225462	508

MODEL COMPATIBILITY	SR130 SR150 SR160		SR175 SV185	SR200 SR210	SR220 SR240		SV250 SR250 SR270 SV280	SV300 SV340		TR270		TR310	TR320 TR340 TV370 TV450	REQ'D EQUIPMENT					
	410	420		430	440	435	445 450	465	420CT		440CT	445CT 450CT		STD FLOW	HIGH FLOW	CASE DRAIN	FRONT ELEC	DEMO DOOR	2ND AUX
60" MANURE SCRAPER	•	•																	
72" MANURE SCRAPER	•	•	•	•	•	•	•	•	•	•	•								
84" MANURE SCRAPER		•	•	•	•	•	•	•	•	•	•	•	•						
96" MANURE SCRAPER					•	•	•	•		•	•	•	•						

FEATURES

- 30" overall height, 31" overall depth
- 1" x 6" reversible rubber edge
- Tapered end blades for improved visibility

APPLICATIONS

- Feedlot clean-up
- Flood clean-up
- Waste water clean-up
- Snow removal

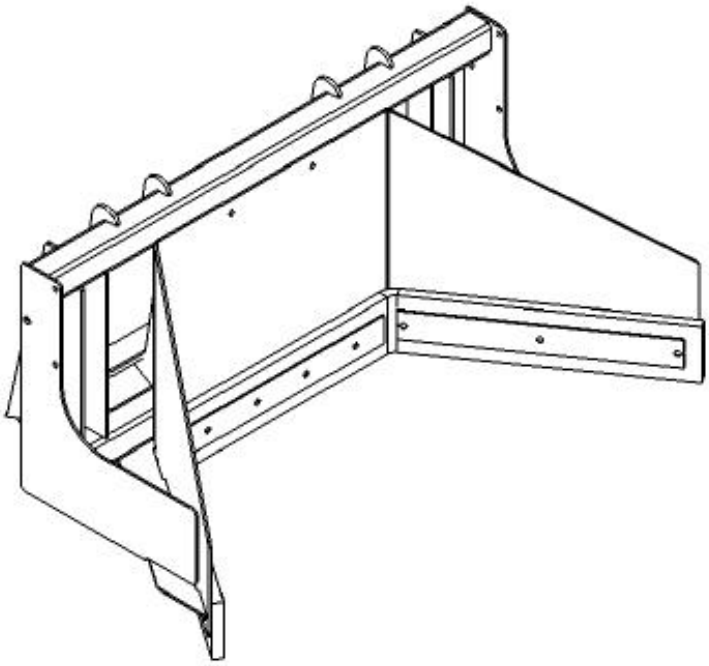

Unit includes – see Specifications in table below

	PART NUMBER	WEIGHT LB
MULCHER – 60" with double carbide tools	84523771	2560
MULCHER – 60" with double claw tools	84554134	2560
MULCHER – 61" with double-tipped carbide tools	51472131	2678

ADDITIONAL EQUIPMENT (Order as needed)

OIL COOLER UNIT, for 60" mulcher (dealer installed)	51436796	140
DEFLECTOR DOOR KIT, for 61" mulcher (Use w/EHF configured units)	51472133	165
DEFLECTOR DOOR KIT, for 61" mulcher (Use w/HF configured units)	51472134	165

REPLACEMENT TOOLS

DOUBLE CARBIDE TOOL SET (44 tools), for 60" mulcher	84553733	140
DOUBLE CLAW TOOL SET (44 tools), for 60" mulcher	84553734	146

MODEL COMPATIBILITY	SR130 SR150 SR160	SR175 SV185 SR200 SR210	SR220 SR240		SV250 SV280	SR250	SR270 SV300 SV340	TR270	TR310 TV370	TR320 TR340 TV450	REQ'D EQUIPMENT					
	410	420 430	435 440	445	450 465			420CT	440CT 445CT 450CT		STD FLOW	HIGH FLOW	EHF	CASE DRAIN	FRONT ELEC	DEMO DOOR	2ND AUX
60" MULCHER						•	•			•			R	R	R	R	
61" MULCHER							•			•		R*	R*	R*	R*	R*	

* Ships standard with High Flow (HF) configuration, but the same model can be easily converted at the dealership for use on Enhanced High Flow (EHF) machines

APPLICATIONS

- Land clearing, site prep
- Right-of-way maintenance
- Parks and trails
- Wildfire break lines
- Mulch trees and brush to ground level

	60" Mulcher	61" Mulcher
REQUIREMENTS FOR OPERATION		
	• Enhanced High Flow (EHF) Only • Front Electric Control Kit • Case Drain • Demolition Door	• High Flow (HF) or Enhanced High Flow (EHF) • Front Electric Control Kit • Case Drain • Demolition Door
SPECIFICATIONS		
Unit Includes	• Cutting tools, mounting bracket, wire harness, hoses and quick coupler	• Cutting tools, hoses, quick disconnects and enhanced high flow (EHF) electrical connector
Working Width	• 60" (1524 mm)	• 61" (1549 mm)
Overall Width	• 73" (1854 mm)	• 74" (1880 mm)
Weight	• 2,530 lb. (1148 kg)	• 2,650 lb. (1202 kg)
Flow Range	• 30-45 gpm (114-170 l/m)	• 35-45 gpm (132-170 l/m)
# of Cutting Tools	• 44	• 30
Manufacturer	• Paladin	• Fecon

Mulchers (Continued next page)

Mulchers

SKID STEER LOADERS/COMPACT TRACK LOADERS

	60" Mulcher	61" Mulcher
FEATURES		
Material Processing	• Effectively grinds 4-6" diameter material	• Effectively grinds 4-6" diameter material
Motor	• Variable displacement motor for performance optimization	• Variable 2-speed motor automatically adjusts the motor displacement to maximize rotor speed and torque to changing material loads
Rotor	• 2,000 rpm • Four second recovery time from dead stall stop • Rotor spiral cut pattern cuts the entire length of rotor and reduces the amount of cut per tool to maximize efficiency and performance	• 2,000 rpm • Drum-style rotor system features a smooth rotor surface, spiral tool pattern and innovative tool shape for smooth, efficient cutting
Cutting Tool Options	• Double carbide cutting tools are for general purpose use and provide longer life • Double claw cutting tools produces smaller chip size; not recommended for mulching below grade	• Comes standard with double-tipped carbide cutting tools for both performance and durability • Optional Samurai knife cutting tool (available separately) produces smaller chip size; not recommended for mulching below grade
Other Features	• Low profile design weighing 2,560 lb. • Adjustable push bar • Replaceable abrasion resistant AR400 wear plate on skid shoes	• Severe duty body construction features smooth top plate which easily sheds water and debris • Pin-on push bar with serrated ears adjusts to 3 positions to better direct material to feed the mulcher • Hinged motor cover provides easy service access; no tools required • Bolt-on AR400 steel skid shoes reduce plowing of material for a more uniform final result
Hydraulic Front Deflector Door	• Standard	• Optional
On-Board Pressure Gauge	• Standard	• Standard
Oil Cooler Unit	• Optional	• Not available
Warranty	• 1-year standard product warranty through Paladin for workmanship and defect not related to wear	• 1-year standard product warranty through CNH Industrial for workmanship and defect not related to wear
Parts Available in CNH Depot	• No	• Yes

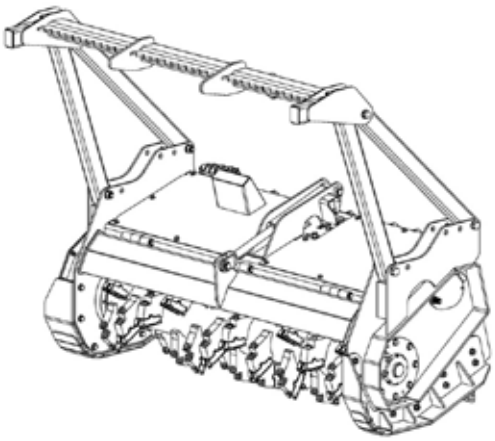

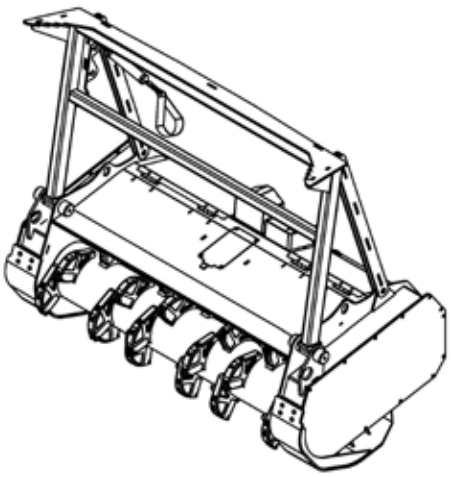

Pallet Forks

SKID STEER LOADERS/COMPACT TRACK LOADERS

Unit includes fork frame and tines.

	PART NUMBER	WEIGHT LB
PALLET FORK ASSEMBLY - 42" Tines - 2,500 lb. rated	48188360	346
PALLET FORK ASSEMBLY - 48" Tines - 2,500 lb. rated	48188361	359
PALLET FORK ASSEMBLY - 42" Tines - 4,000 lb. rated	48188362	399
PALLET FORK ASSEMBLY - 48" Tines - 4,000 lb. rated	48188363	416
PALLET FORK ASSEMBLY - 42" Tines - 5,500 lb. rated	48188365	416
PALLET FORK ASSEMBLY - 48" Tines - 5,500 lb. rated	48188366	438

ADDITIONAL EQUIPMENT (Order as needed)

FORK FRAME ONLY	48188358	220
TINE SET (2 tines) 42" - 2,500 lb. rated,1.2" x 3" x 42"	48188367	126
TINE SET (2 tines) 48" - 2,500 lb. rated,1.2" x 3" x 48"	48188368	129
TINE SET (2 tines) 42" - 4,000 lb. rated,1.4" x 4" x 42"	84354440	179
TINE SET (2 tines) 48" - 4,000 lb. rated,1.4" x 4" x 48"	84354441	196
TINE SET (2 tines) 42" - 5,500 lb. rated,1.6" x 4" x 42"	84332183	196
TINE SET (2 tines) 48" - 5,500 lb. rated,1.6" x 4" x 48"	84332184	218

MODEL COMPATIBILITY	SR130 SR150 SR160	SR175 SV185 SR200 SR210	SR220 SR240	SV250 SR250 SR270 SV280	SV300 SV340	TR270 TR310	TR320 TR340 TV370 TV450	REQ'D EQUIPMENT					
	410	420 430	440 435	445	450 465	420CT 440CT	445CT 450CT	STD FLOW	HIGH FLOW	CASE DRAIN	FRONT ELEC	DEMO DOOR	2ND AUX
PALLET FORKS - 2,500 lb. rated	•												
PALLET FORKS - 4,000 lb. rated	•	•	•	•		•							
PALLET FORKS - 5,500 lb. rated	•	•	•	•	•	•	•						

FEATURES

- Heat-treated forged tines, manually adjustable
- Locking position pins
- High visibility back guard
- Steps for easy entry to cab
- Frame forward design for use on ROPS or cab units
- Custom etching option available - for more information, see Marketing Bulletin MB18-189 on the Dealer Portal (Parts > Product Information > Attachments & Ground Engaging Tools > Attachments)

Light Duty Tines

- 42" (1067mm) or 48" (1219mm) length
- 1.2" x 3" (30mm x80mm) cross-section
- 2500# Class II (1140 kg) - Rated at 24" (600mm) - 2 tines

Standard Tines

- 42" (1067mm) or 48" (1219mm) length
- 1.4" x 4" (35mm x 100mm) cross-section
- 4000# Class II (1800 kg) - Rated at 24" (600mm) - 2 tines

Heavy Duty Tines

- 42" (1067mm) or 48" (1219mm) length
- 1.6" x 4" (40mm x 100mm) cross-section
- 5500# Class II (2500 kg) - Rated at 24" (600mm) - 2 tines

APPLICATIONS

- Handling pallets and construction materials

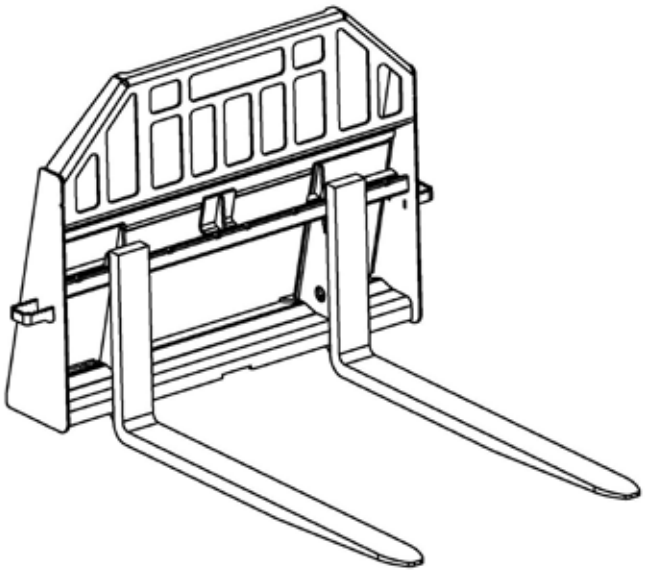

Pallet Forks (ROPS)

SKID STEER LOADERS/COMPACT TRACK LOADERS

Unit includes fork frame and tines.

	PART NUMBER	WEIGHT LB
PALLET FORK ASSEMBLY - 42" Tines - 4,000 lb. rated	84354438	401
PALLET FORK ASSEMBLY - 48" Tines - 4,000 lb. rated	84354439	418
PALLET FORK ASSEMBLY - 42" Tines - 5,500 lb. rated	84332180	418
PALLET FORK ASSEMBLY - 48" Tines - 5,500 lb. rated	84332181	440

ADDITIONAL EQUIPMENT (Order as needed)

FORK FRAME ONLY	84348693	222
TINE SET (2 tines) 42" - 4,000 lb. rated,1.4" x 4" x 42"	84354440	179
TINE SET (2 tines) 48" - 4,000 lb. rated,1.4" x 4" x 48"	84354441	196
TINE SET (2 tines) 42" - 5,500 lb. rated,1.6" x 4" x 42"	84332183	196
TINE SET (2 tines) 48" - 5,500 lb. rated,1.6" x 4" x 48"	84332184	218

MODEL COMPATIBILITY	SR130 SR150 SR160	SR175 SV185 SR200 SR210	SR220 SR240	SV250 SR250 SR270 SV280	SV300 SV340	TR270 TR310	TR320 TR340 TV370 TV450	REQ'D EQUIPMENT					
	410	420 430	440 435	445	450 465	420CT 440CT	445CT 450CT	STD FLOW	HIGH FLOW	CASE DRAIN	FRONT ELEC	DEMO DOOR	2ND AUX
PALLET FORKS - 4,000 lb. rated	•	•	•	•		•							
PALLET FORKS - 5,500 lb. rated	•	•	•	•	•	•	•						

FEATURES

- Heat-treated forged tines, manually adjustable
- Locking position pins
- High visibility back guard
- Steps for easy entry to cab
- ROPS frame:
  - Original design
  - Close-coupled frame
  - High lift capacity
  - Back guard contact with fully open cab door on some models

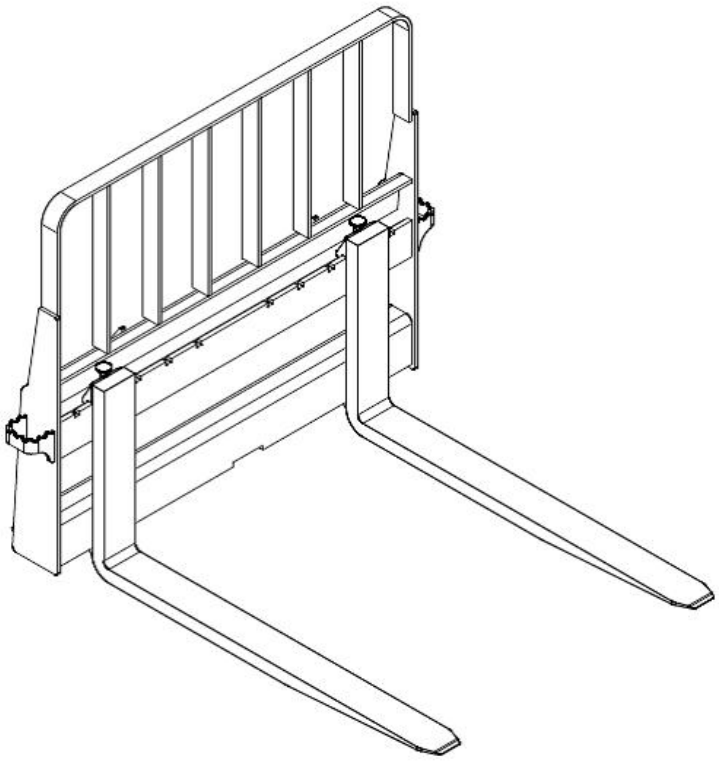

Standard Tines

- 42" (1067mm) or 48" (1219mm) length
- 1.4" x 4" (35mm x 100mm) cross-section
- 4000# Class II (1800 kg) - Rated at 24" (600mm) - 2 tines

Heavy Duty Tines

- 42" (1067mm) or 48" (1219mm) length
- 1.6" x 4" (40mm x 100mm) cross-section
- 5500# Class II (2500 kg) - Rated at 24" (600mm) - 2 tines

APPLICATIONS

- Handling pallets and construction materials

Pallet/Nursery Forks – Hydraulic Positioning

SKID STEER LOADERS/COMPACT TRACK LOADERS

Unit includes tines, hoses and quick disconnects.

	PART NUMBER	WEIGHT LB
COMPLETE UNITS		
PALLET FORKS, Hyd. Positioning with 42" Tines	47909707	398
PALLET FORKS, Hyd. Positioning with 48" Tines	47909708	416
NURSERY FORKS, Hyd. Positioning with 48" Tines and Nursery Sleeves	48124313	831
FRAME ONLY		
PALLET FORKS, Hyd. Positioning, Frame Only without tines (use std ITA Class II, 3" or 4" width tines)	47909711	376
OPTIONAL EQUIPMENT (Order as needed)		
KIT, Tines and Nursery Sleeves only	48124315	400

MODEL COMPATIBILITY	SR130 SR150 SR160	SR175 SV185	SR200 SR210	SR220 SR240	SV250 SR250 SR270 SV280	SV300 SV340		TR270	TR310		TR320 TR340 TV370 TV450	REQ'D EQUIPMENT					
	410 420	430	440	435	445 450	465	420CT		440CT	445CT 450CT		STD FLOW	HIGH FLOW	CASE DRAIN	FRONT ELEC	DEMO DOOR	2ND AUX
PALLET FORKS, Hyd. Positioning, 42" Tines	•	•	•	•	•	•	•	•	•	•	•	R					
PALLET FORKS, Hyd. Positioning, 48" Tines	•	•	•	•	•	•	•	•	•	•	•	R					
NURSERY FORKS, Hyd. Positioning, 48" Tines and Nursery Sleeves	•	•	•	•	•	•	•	•	•	•	•	R					

FEATURES

- Hydraulically position tines from 10" to 44" spacing (outside to outside)
- Excellent operator visibility
- Steps for easy entry to cab
- Zinc plated, corrosion resistant components
- Center mount, 4 inch wide fork carriers
- 42/48" Tines - 1-1/2" x 4" cross-section
- 5500#/pair ITA Class II rated tines
- Hoses and flat face hydraulic disconnects included
- The pin-on nursery sleeves protect the tree root ball when clamping and transporting

APPLICATIONS

- Handling pallets and construction materials
- Nursery Forks – pick up and transport nursery stock

REQUIREMENTS FOR OPERATION

- Standard auxiliary hydraulics

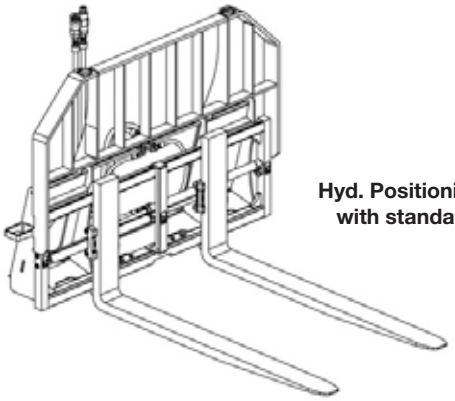

Hyd. Positioning frame with standard tines

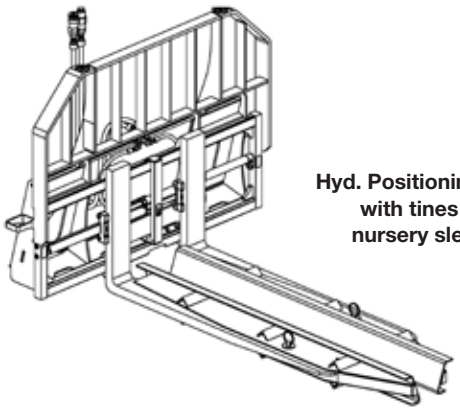

Hyd. Positioning frame with tines and nursery sleeves

Post Driver

SKID STEER LOADERS/COMPACT TRACK LOADERS

	PART NUMBER	WEIGHT LB
POST DRIVER - MODEL PD4800	84258061	1385
COMPLETING KITS (Must select one for complete unit)		
Square collar and striker plate assy 3.5"	84258062	63
Square collar and striker plate assy 6"	84258063	65
Square collar and striker plate assy 8"	84258064	66
Collar and striker plate assy 6" X 8"	84258065	64
OPTIONAL EQUIPMENT (Order as needed)		
Round collar, 3"	84258066	15
Square collar, 3.5"	84258067	15
Round collar, 4"	84258068	15
H beam collar 4" X 6"	84258070	15
Round collar, 6"	84258071	15
Square collar, 6"	84258073	15
Square collar, 8"	84258074	15
Collar, 6" X 8"	84258076	15
T post adapter (use w/ 6" round or 6" square collar)	84258078	15

MODEL COMPATIBILITY	SR130 SR150 SR160	SR175 SV185	SR200 SR210	SR220 SR240		SV250 SR250 SR270 SV280	SV300 SV340		TR270	TR310		TR320 TR340 TV370 TV450	REQ'D EQUIPMENT					
	410	420	430	440	435	445 450	465	420CT		440CT	445CT 450CT		STD FLOW	HIGH FLOW	CASE DRAIN	FRONT ELEC	DEMO DOOR	2ND AUX
POST DRIVER		•	•	•	•	•	•	•	•	•	•	•	R					

FEATURES

- May be used with Tilt-Attach
- Manual side shift
- 24 gpm maximum flow
- Quick change striker plate and collar assemblies
- Designed for smooth operation with no shock load back to the skid steer

REQUIREMENTS FOR OPERATION

- Standard auxiliary hydraulics

SPECIFICATIONS	
Length	38.69"
Width	54.25"
Height	91.48"
Maximum stroke	48"
Weight (lbs)	1,360
Hammer weight, standard (lbs)	289
Maximum hammer wt (lbs)	600
Strokes per minute	42
Minimum hydraulic pressure	2000 psi
Maximum flow	24 gpm
Impact energy w/289 lb wt	1,156 ft-lb
Impact energy w/600 lb wt	2,400 ft-lb

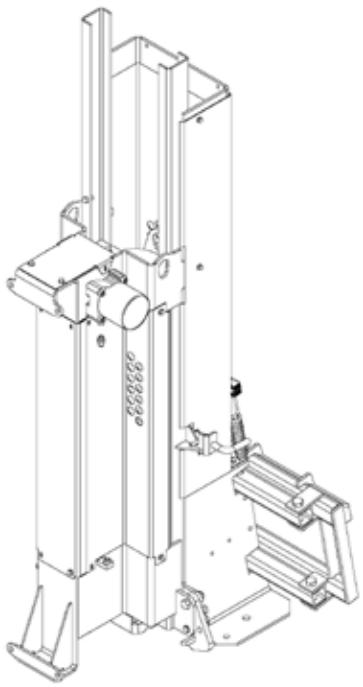

Preparator® Landscape Rake

SKID STEER LOADERS/COMPACT TRACK LOADERS

Unit includes mounting plate, hoses and quick couplers.

REQUIRES STANDARD AUXILIARY BOOM HYDRAULICS	PART NUMBER	WEIGHT LB
PREPARATOR® LANDSCAPER GRADER RAKE, 66"	446019A1	1270
PREPARATOR® LANDSCAPER GRADER RAKE, 76"	446020A1	1465

MODEL COMPATIBILITY	SR130 SR150 SR160	SR175 SV185		SR200 SR210	SR220 SR240		SV250 SR250 SR270 SV280	SV300 SV340		TR270	TR310		TR320 TR340 TV370 TV450	REQ'D EQUIPMENT					
	410 420		430		440	435	445 450	465	420CT		440CT	445CT 450CT		STD FLOW	HIGH FLOW	CASE DRAIN	FRONT ELEC	DEMO DOOR	2ND AUX
PREPARATOR - 66"	•	•	•	•	•	•			•	•				R					
PREPARATOR - 76"		•	•	•	•	•	•	•	•	•	•	•	•	R					

FEATURES

- Conditions the soil with scarifying action while picking up debris
- Picks up rocks from 1" to 20" diameter
- An all-in-one landscaping tool; levels out ridges and ruts; cuts out grass that needs reseeding; prepares soil for planting
- Ruggedly built to withstand constant use
- Flat face hydraulic quick disconnects included
- Hydraulic hoses included

APPLICATIONS

- Clean up, rock removal and soil preparation

REQUIREMENTS FOR OPERATION

- Standard auxiliary hydraulics 10-25 gpm required

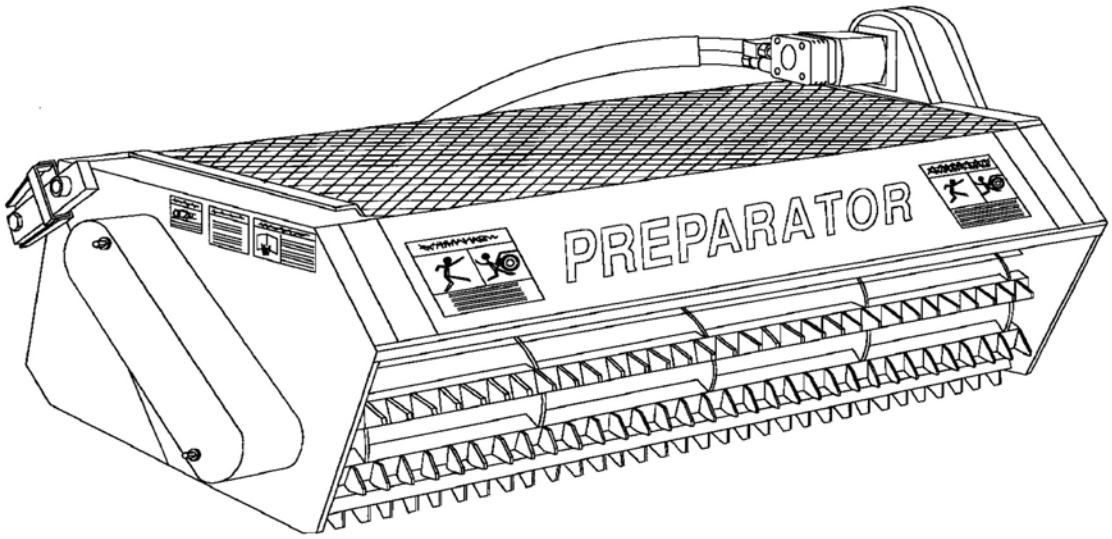

Preparator Landscape Grader Rake (Continued next page)

Preparator® Landscape Rake

SKID STEER LOADERS/COMPACT TRACK LOADERS

SPECIFICATIONS		
MODEL	**PREPARATOR 66"**	**PREPARATOR 76"**
BUCKET		
Capacity	10.32 ft3 (0.29m3)	12.50 ft3 (0.35m3)
Overall Width	74.75 in. (190 cm)	84.75 in. (215 cm)
Swath Width	66.0 in. (168 cm)	76.0 in. (193 cm)
Overall Height	25.53 in. (65 cm)	25.53 in. (65 cm)
Overall Length	60.13 in. (153 cm)	60.13 in. (153 cm)
DRUM		
RPM-r/min	0 - 86	0 - 86
Overall Diameter	12.5 in. (54.6 cm)	21.5 in. (54.6 cm)
Rake Bar (square steel tubing)	2 in. x 2 in. (50.8 x 50.8 mm)	2 in. x 2 in. (50.8 x 50.8 mm)
Teeth	T-1 Steel	T-1 Steel
Tooth Thickness	0.19 in. (4.82 mm)	0.19 in. (4.82 mm)
Tooth Length	2.19 in. (55.6 mm)	2.19 in. (55.6 mm)
Number of Teeth	310	350
HYDRAULIC MOTOR		
Operating RPM Range	10 - 18 gpm (38 - 61 L/min) @ 2300 psi (15 858 kPa)	10 - 18 gpm (38 - 61 L/min @ 2300 psi (15 858 kPA)
Horsepower	12 - 23 (8.9 - 17.1 kW)	12 - 23 (8.9 - 17.1 kW)
Torque	11,701 lb-in (1322 N-m)	11,701 lb-in (1322 N-m)
DRIVE CHAINS		
Rake Drive	#80H Roller Chain	#80H Roller Chain
Brush Drive	#50H Roller Chain	#50H Roller Chain
Overall Weight	1,270 lb (576 kg)	1,465 lb (664 kg)

Rear Stabilizer

SKID STEER LOADERS/COMPACT TRACK LOADERS

Base stabilizer packages include rear stabilizers (less pads) and mounting brackets. Hydraulic kits required as indicated.

REQUIRES STANDARD AUXILIARY BOOM HYDRAULICS	PART NUMBER	WEIGHT LB
REAR STABILIZER PACKAGE (includes hyd kit)	87053912	375
REAR STABILIZER PACKAGE (includes hyd kit)	87053913	391
REAR STABILIZER PACKAGE (includes hyd kit)	87373393	405
REAR STABILIZER PACKAGE (requires hyd kit)	84518504	460
REAR STABILIZER PACKAGE (requires hyd kit)	84518505	480

ADDITIONAL COMPONENTS (Must order hydraulic kit as indicated and pad kit for complete unit.)

HYDRAULIC KIT - FOR USE W/ATTACHMENT VALVE (SR175, SR200, SR210, SR220, SR240, SR250, SR270, TR270, TR310, TR320, TR340)	84518506	20
HYDRAULIC KIT - FOR USE W/2ND AUX KIT (SR175, SR200, SR210, SR220, SR240, SR250, SR270, TR310, TR270, TR320, TR340)	84546390	20
HYDRAULIC KIT - FOR USE W/ATTACHMENT VALVE (SV185, SV250, SV280, SV300, SV340, TV370, TV380, TV450)	84518507	25
HYDRAULIC KIT - FOR USE W/2ND AUX KIT (SV185, SV250, SV280, SV300, SV340, TV370, TV380, TV450)	84546391	25
GROUSER PAD SET	87053914	40

MODEL COMPATIBILITY	410 420	430 440	435 445	450	465	420CT 440CT	445CT	450CT	SR130 SR150 SR160	SR175	SV185	SR200 SR210	SR220 SR240	SV250 SV280	SR250 SR270	SV300 SV340	TR270 TR310	TR320 TR340	TV370 TV450	REQ'D EQUIP STD FLOW	REQ'D EQUIP 2ND AUX
REAR STABILIZER - 87053912	•	•				•														R	O
REAR STABILIZER - 87053913			•		•		•													R	O
REAR STABILIZER - 87373393				•				•												R	O
REAR STABILIZER - 84518504										•	•	•					•			R	O
REAR STABILIZER - 84518505													•	•	•	•		•	•	R	O
HYDRAULIC KIT - 84518506										•		•	•		•		•	•			
HYDRAULIC KIT - 84546390										•		•	•		•		•	•			R
HYDRAULIC KIT - 84518507											•			•		•			•		
HYDRAULIC KIT - 84546391											•			•		•			•		R

FEATURES

- Use with tree spades, backhoes, etc.

REQUIREMENTS FOR OPERATION

- 2nd auxiliary or attachment valve with extra auxiliary hydraulic function

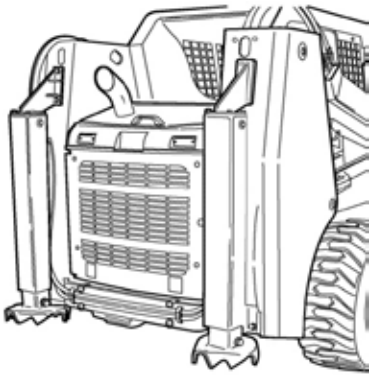

400 Series

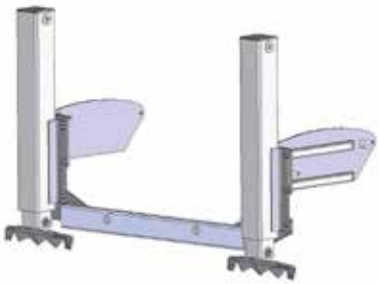

Alpha Series

Rock Bucket

SKID STEER LOADERS/COMPACT TRACK LOADERS

REQUIRES STANDARD AUXILIARY BOOM HYDRAULICS	PART NUMBER	WEIGHT LB
ROCK BUCKET 66", 3" tine spacing	87381975	555
ROCK BUCKET 66", 2" tine spacing	87381976	680
ROCK BUCKET 75", 3" tine spacing	87381977	625
ROCK BUCKET 75", 2" tine spacing	87381978	680
ROCK BUCKET 84", 3" tine spacing	87381979	792

OPTIONAL EQUIPMENT

Grapple attachment for 75" and 84" Rock Buckets (Not compatible with CWL HD buckets)	87389692	490

MODEL COMPATIBILITY	SR130 SR150 SR160	SR175 SV185	SR200 SR210		SR220 SR240		SV250 SR250 SR270 SV280	SV300 SV340		TR270	TR310		TR320 TR340 TV370 TV450	REQ'D EQUIPMENT					
	410	420	430	440		435	445 450	465	420CT		440CT	445CT 450CT		STD FLOW	HIGH FLOW	CASE DRAIN	FRONT ELEC	DEMO DOOR	2ND AUX
66" ROCK BUCKET	•	•	•	•					•	•									
75" ROCK BUCKET		•	•	•	•	•	•	•	•	•	•	•	•	O					
84" ROCK BUCKET					•	•	•	•				•	•	O					

FEATURES

- Designed to hold the collected rocks and debris while leaving the soil
- Tine spacing determines the size of rocks and debris that will be retained while allowing the soil to sift back to the ground
- 2" tine spacing keep bricks in the bucket for easier clean up around job sites
- The rake design is used to gather material away from buildings and obstructions, for faster clean up of debris, to level out clumps of dirt and pick-up pieces of sod

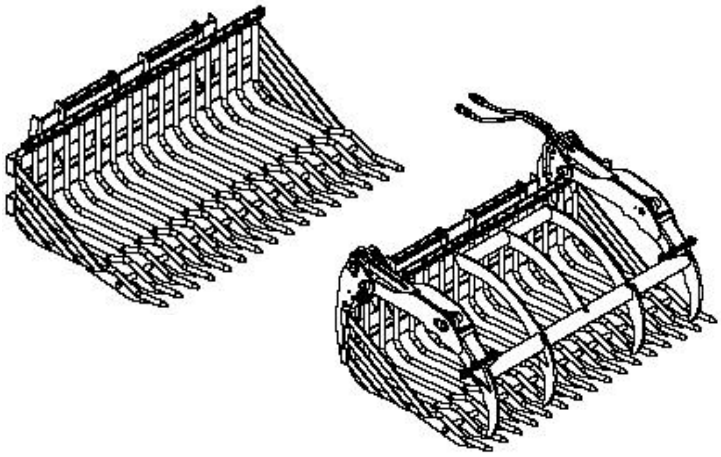

APPLICATIONS

- Rake - Pile - Load debris from construction sites, pastures, fields, etc.

SPECIFICATIONS			
DESCRIPTION	66"	75"	84"
A. Overall Width	65.9"	74.4"	82.9"
B. Overall Depth	49.8"	49.8"	49.8"
C. Overall Height	21.8"	21.8"	21.8"
D. Tine Spacing			
(center to center)	4.25" or 3.15"	4.25" or 3.15"	4.25" or 3.15"
(between tines)	3.1" or 2"	3.1" or 2"	3.1"
Number of Tines	16 or 21	18 or 24	20
Tine Rod Diameter	1.1"	1.1"	1.1"

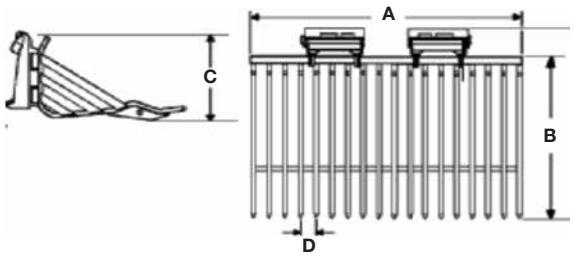

Rock Saw

SKID STEER LOADERS/COMPACT TRACK LOADERS

Rock wheel packages include drum, hydraulic depth and sideshift, hoses and quick couplers.
Must select drum pick kit for required width.

* HIGH FLOW AUXILIARY BOOM HYDRAULICS, CASE DRAIN PLUMBING AND AUXILIARY FRONT ELECTRIC CONTROL KIT REQUIRED	PART NUMBER	WEIGHT LB
ROCK SAW, RS18, 18"	87523116	1775
ROCK SAW, RS 24, 24"	87523117	2095
EHF ROCK SAW, RS18, 18"	84523784	1775
EHF ROCK SAW, RS24, 24"	84523785	2095

ADDITIONAL COMPONENTS (Must Select One for Complete Unit)

2.5" drum/pick kit for RS18	87523118	220
4" drum/pick kit for RS18	87523119	245
2.5" drum/pick kit for RS24	87523120	290
4" drum/pick kit for RS24	87523121	325

ADDITIONAL COMPONENTS (Order as needed)

Wire harness adapter (adapts pre-9/1/2001 75XT, 85XT, 90XT, 95XT w/8-pin connector to 14-pin connector)	87048529	182

MODEL COMPATIBILITY	SR130 SR150 SR160		SR175 SV185		SR200 SR210	SR220 SR240	SV250 SV280		SR250 SR270	SV300 SV340			TR270 TR310	TV370	TR320 TR340 TV450	REQ'D EQUIPMENT						
	410	420		430		440 435	445 450	465			420CT	440CT		445CT 450CT		STD FLOW	HIGH FLOW	EHF	CASE DRAIN	FRONT ELEC	DEMO DOOR	2ND AUX
ROCK SAW, RS18, 18"						•	•	•	•	•		•		•	•		R		R	R		
ROCK SAW, RS 24, 24"							•	•	•	•				•	•		R		R	R		
EHF ROCK SAW, RS18, 18"									•	•					•	R		R	R	R		
EHF ROCK SAW, RS24, 24"									•	•					•	R		R	R	R		

FEATURES

- Planetary drive
- Convenient electro-hydraulic control for depth and sideshift
- Dual side discharge of material
- Pick removal tool included
- Available in 2.5" and 4" wheel widths
- 40-gallon Pressurized Water Kit available (See “Water Kits”)

APPLICATIONS

- Slot cutting
- Utility cuts for gas, water, sewer, electrical and cable TV installation and repair
- Asphalt patch cuts
- Cuts to create expansion joints in roadways

REQUIREMENTS FOR OPERATION

- High flow auxiliary hydraulics (EHF for specified units)
- Front Electric Control Kit
- Case Drain

Rock Saw (Continued next page)

Rock Saw

SKID STEER LOADERS/COMPACT TRACK LOADERS

SPECIFICATIONS		
MODEL	**RS18**	**RS24**
Operating Weight - lb. (kg)	2020 (916)	2420 (1098)
Cutting Depth - in. (mm)	0-18 (0-457)	0-24 (0-610)
Cutting Width - in. (mm)	2.5 (64)/4 (102)	2.5 (64)/4 (102)
Drum Diameter - in. (mm)	48(1219)	60(1524)
Sideshift - in. (mm)	-3-22(-76-560) center to right	-3-22 (-76-560) center to right
Hydraulic requirement - gpm (l/m)	30-40 (114-151)	35-40 (132-151)
Hydraulic requirement - psi (bar)	2500-3500 (172-241)	2500-3500 (172-241)
EHF Units Hydraulic requirement - psi (bar)	4000 (275)	4000 (275)
Drive	Planetary	Planetary
Controls	Full hydraulic with in-cab controls	Full hydraulic with in-cab controls
No. of Carbide Picks	42	56

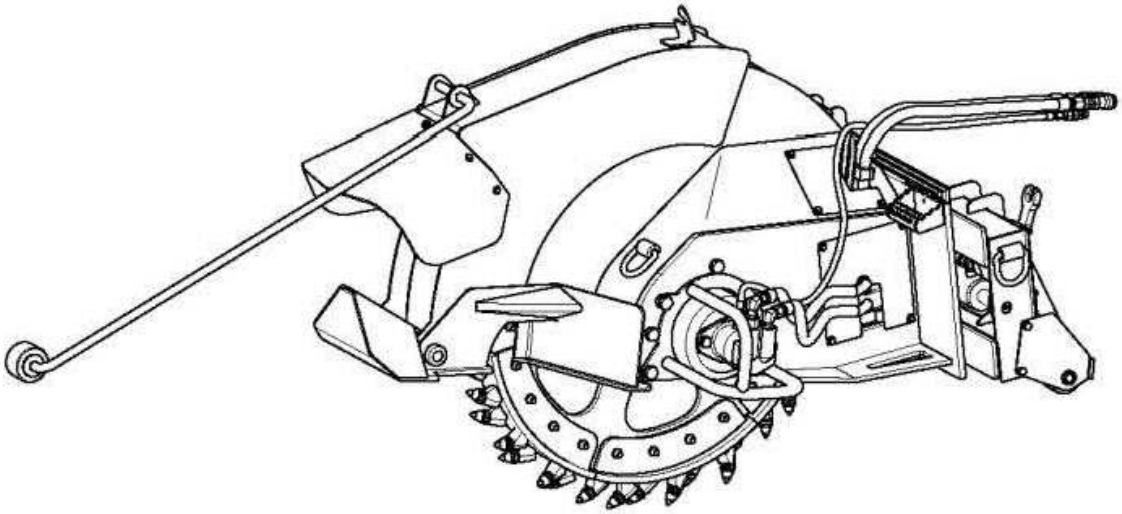

Root Rake

SKID STEER LOADERS/COMPACT TRACK LOADERS

Unit includes skid steer mounting bracket, hoses and quick couplers.

REQUIRES STANDARD AUXILIARY BOOM HYDRAULICS	PART NUMBER	WEIGHT LB
72" ROOT RAKE with grapple	87382368	1100
78" ROOT RAKE with grapple	87389704	1150
84" ROOT RAKE with grapple	87389705	1220

MODEL COMPATIBILITY	SR130 SR150 SR160	SR175 SV185	SR200 SR210	SR220 SR240		SV250 SR250 SR270 SV280	SV300 SV340		TR270	TR310		TR320 TR340 TV370 TV450	REQ'D EQUIPMENT					
	410	420	430	440	435	445 450	465	420CT		440CT	445CT 450CT		STD FLOW	HIGH FLOW	CASE DRAIN	FRONT ELEC	DEMO DOOR	2ND AUX
72" ROOT RAKE		•	•	•	•	•	•	•	•	•			R					
78" ROOT RAKE			•	•	•	•	•	•	•	•		•	R					
84" ROOT RAKE					•	•	•				•	•	R					

FEATURES

- Upper push-bar, aggressive profiles with H&L-230 style teeth work together to neatly gather material into more manageable pile
- Zinc plated, greasable, pivot pins with protected grease zerks, and replaceable hardened steel bushings at all pivot locations
- Pilot operated check for positive lock clamping
- Weld-on D-ring for countless applications

APPLICATIONS

- Rake - Pile - Load debris from construction sites, pastures, fields, storm damage, etc.

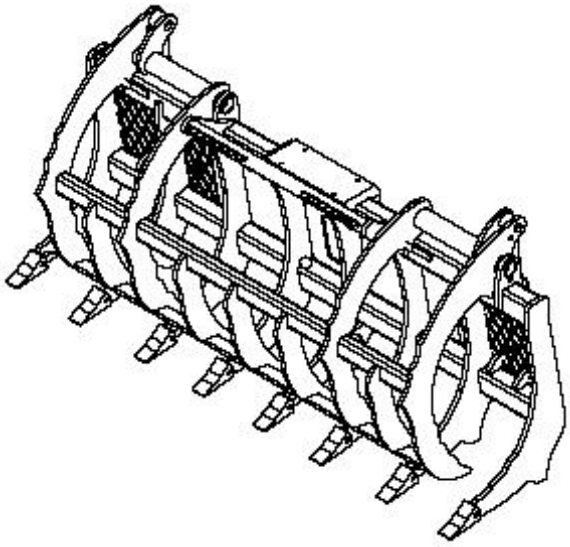

Rotary Cutter

SKID STEER LOADERS/COMPACT TRACK LOADERS

Unit includes base mower, mounting frame, safety chain, quick disconnects and hoses.

REQUIRES STANDARD AUXILIARY BOOM HYDRAULICS	PART NUMBER	WEIGHT LB
ROTARY CUTTER, 60" Std Flow (15 - 25 gpm)	47591786	1225
ROTARY CUTTER, 72" Std Flow (15 - 25 gpm)	47591787	1375
ROTARY CUTTER, 78" Std Flow (15 - 25 gpm)	47591788	1460
ROTARY CUTTER, 72" High Flow (26 - 32 gpm)	47591789	1375
ROTARY CUTTER, 72" High Flow (32 - 40 gpm)	47591790	1495
ROTARY CUTTER, 78" High Flow (26 - 32 gpm)	47591791	1460
ROTARY CUTTER, 78" High Flow (32 - 40 gpm)	47591792	1580

ADDITIONAL EQUIPMENT (Order as needed)

PRESSURE INDICATOR KIT - SF/26-32HF	47591794	10
PRESSURE INDICATOR KIT - 32-40HF	47591795	10
DUAL WHEEL KIT (UNDER DECK)	47591797	85
WEAR SHOE REPLACEMENT KIT	47591801	15

REPLACEMENT BLADE SETS

REPLACEMENT BLADES - 60"	47591798	45
REPLACEMENT BLADES - 72"	47591799	50
REPLACEMENT BLADES - 78"	47591800	55

MODEL COMPATIBILITY	SR130	SR150 SR160		SR175 SV185		SR200 SR210	SR220 SR240		SV250 SR250 SR270 SV280	SV300 SV340		TR270	TR310			TR320 TR340 TV370 TV450	REQ'D EQUIPMENT					
		410	420		430		440	435	445 450	465	420CT			440CT	445CT 450CT		STD FLOW	HIGH FLOW	CASE DRAIN	FRONT ELEC	DEMO DOOR	2ND AUX
STANDARD FLOW (15-25 gpm)																						
60" ROTARY CUTTER		•	•	•	•						•	•	•				R				R	
72" ROTARY CUTTER			•	•	•	•	•	•	•	•	•	•	•	•	•	•	R				R	
78" ROTARY CUTTER						•	•	•	•	•			•	•	•	•	R				R	
HIGH FLOW (26-32 gpm)																						
72" ROTARY CUTTER				•		•						•	•					R			R	
78" ROTARY CUTTER						•							•					R			R	
HIGH FLOW (32-40 gpm)																						
72" ROTARY CUTTER			•		•		•	•	•	•	•			•	•	•		R	R		R	
78" ROTARY CUTTER							•	•	•	•				•	•	•		R	R		R	

FEATURES

- Direct drive motor with options for 15 to 40 gpm with dual internal reliefs for drive system protection and fast, controlled shut down
- 3-blade carrier
- Double edged blades for bi-directional cutting
- Optional pressure gauge to help prevent excessive stalling and overheating
- Heavy-duty 1/4" high strength steel deck for added strength and rigidity
- Replaceable skid shoes
- Lift limiting safety chain
- Hoses and flat face hydraulic disconnects included

APPLICATIONS

- For small trees and brush up to 4" in diameter

REQUIREMENTS FOR OPERATION

- Demolition Door (must order separately from CNH Industrial Parts & Service)
- Standard auxiliary hydraulics (as indicated)
- High flow auxiliary/case drain (as indicated)

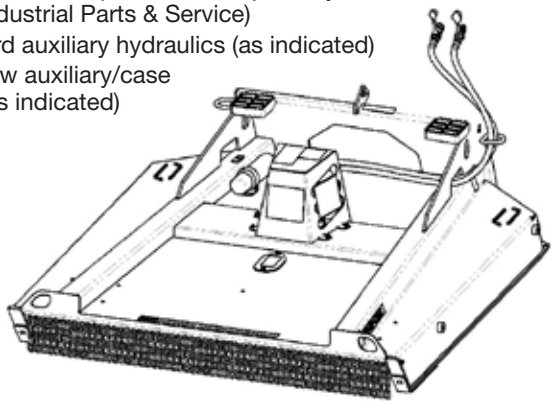

Rotary Cutter – Extreme

SKID STEER LOADERS/COMPACT TRACK LOADERS

Unit includes base mower, mounting frame, safety chain, quick disconnects and hoses.

EXTREME DUTY GROUND SHARK ™ Brush Cutter	PART NUMBER	WEIGHT LB
ROTARY CUTTER, 72" High Flow (30 - 45 gpm)	47898424	2150

ADDITIONAL EQUIPMENT (Order as needed)

CARBIDE TOOTH KIT	47898425	10

REPLACEMENT BLADE SETS

WEAR SHOE REPLACEMENT KIT	47898429	30

MODEL COMPATIBILITY	SR130 SR150 SR160	SR175 SV185		SR200 SR210		SR220 SR240	SV250 SR250 SR270 SV280	SV300 SV340		TR270	TR310			TR320 TR340 TV370 TV450	REQ'D EQUIPMENT					
	410 420		430		440	435	445 450	465	420CT			440CT	445CT 450CT		STD FLOW	HIGH FLOW	CASE DRAIN	FRONT ELEC	DEMO DOOR	2ND AUX
ROTARY CUTTER, 72" High Flow (30 - 45 gpm)						•	•	•		•	•	•	•	•		R			R	

FEATURES

- Direct drive motor with options for 30 to 45 gpm with dual internal reliefs for drive system protection and fast, controlled shut down
- Pressure relief valve on the hydraulic motor protects against pressure spikes that could damage the drive system
- Four double bevel edge blades
- Capable of cutting heavy brush and sapling trees up to 7" in diameter
- Standard pressure gauge to help prevent excessive stalling and overheating
- Heavy-duty 1/4" high strength steel deck for added strength and rigidity
- Heavy duty push bar pushes trees away from the operator
- Optional 18 tooth carbide stump grinding kit increases mulching performance
- Retractable front shield to utilize more of the blade in heavy material
- Replaceable skid shoes
- Lift limiting safety chain
- Hoses and flat face hydraulic disconnects included

APPLICATIONS

- Roadside maintenance, right of way clearing, site preparation, fire control, fence line maintenance, and trail maintenance

REQUIREMENTS FOR OPERATION

- Demolition Door (must order separately from CNH Industrial Parts & Service)
- High flow auxiliary hydraulics

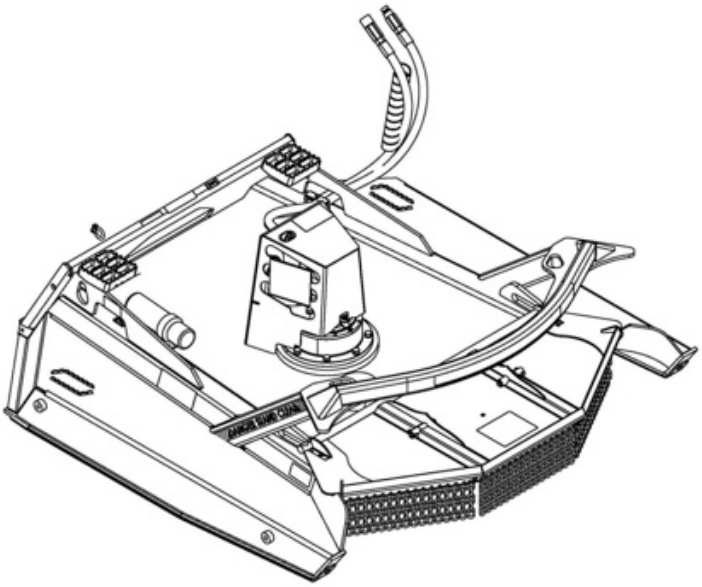

Silage Defacer

SKID STEER LOADERS/COMPACT TRACK LOADERS

AUXILIARY BOOM HYDRAULICS REQUIRED – REAR COUNTERWEIGHTS RECOMMENDED	PART NUMBER	WEIGHT LB
SILAGE DEFACER	87045796	940

MODEL COMPATIBILITY	SR130 SR150 SR160	SR175 SV185	SR200 SR210	SR220 SR240		SV250 SR250 SR270 SV280	SV300 SV340		TR270	TR310		TR320 TR340 TV370 TV450	REQ'D EQUIPMENT					
	410	420	430	440	435	445 450	465	420CT		440CT	445CT 450CT		STD FLOW	HIGH FLOW	CASE DRAIN	FRONT ELEC	DEMO DOOR	2ND AUX
SILAGE DEFACER		•	•	•	•	•	•	•	•	•	•	•	R					

FEATURES

- 3-position, extendable frame. Working heights up to 19', depending on loader lift height, loader capacity and frame position
- Inverted auger style cutter loosens haylage and silage from tightly compacted bunker silos
- Maintains smooth compacted bunker face for reduced spoilage and improved palatability
- Does not reduce haylage stem length for optimum digestibility yielding higher milk production
- Open frame design allows the operator so see the bunker face
- 96" full width cut and inboard mounted drive motor allows defacer to operate closer to bunker walls
- Frame stands protect rotor when running or parked
- Cutter made from abrasion-resistant steel for long life
- Enclosed #80H chain drive with simple chain tension adjustment
- For skid-steers with 15-25 gpm hydraulic flow

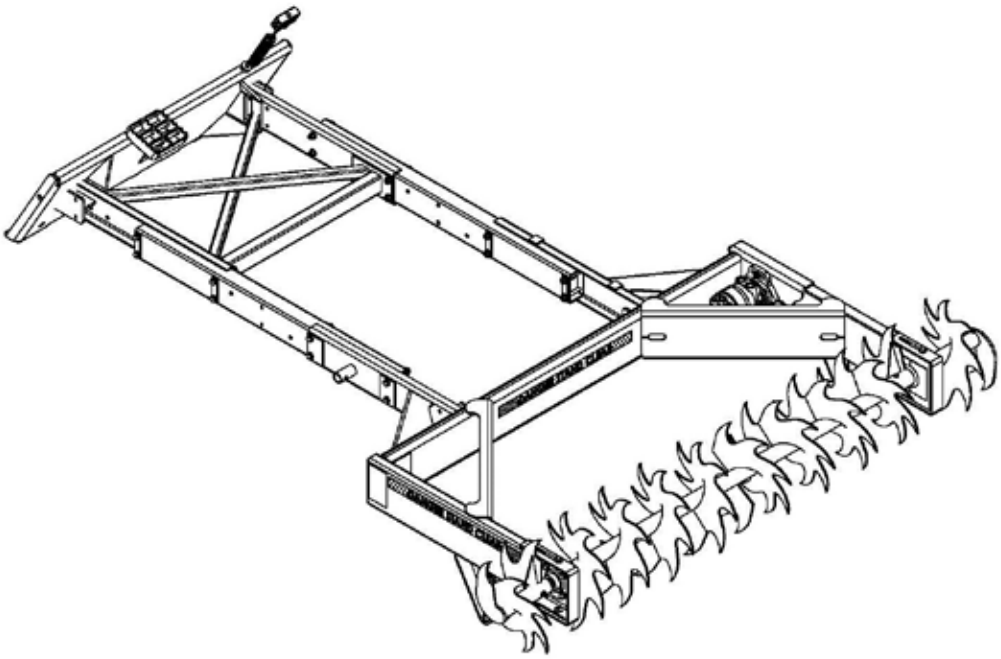

Silt Fence Installer

SKID STEER LOADERS/COMPACT TRACK LOADERS

	PART NUMBER	WEIGHT LB
SILT FENCE INSTALLER with integrated skid-steer mount	87596133	840
SILT FENCE INSTALLER with 3-point mount (requires 87596137 for skid steer operation)	87596134	825
SILT FENCE INSTALLER with 3 point mount and 72" sliding offset hitch (requires 87596137 for skid steer operation)	87596135	1260
SILT FENCE INSTALLER with 3 point mount and 84" sliding offset hitch (requires 87596137 for skid steer operation)	87596136	1315

BASE UNIT OPTIONS (Order as Needed)

Skid-steer adapter bracket for 3-point mount models used on skid-steers	87596137	255
Hydraulic top link kit for 3-point mount models used on tractors	87596138	35

MODEL COMPATIBILITY	SR130	SR150 SR160	SR175 SV185	SR200 SR210	SR220 SR240		SV250 SR250 SR270 SV280	SV300 SV340		TR270	TR310		TR320 TR340 TV370 TV450	REQ'D EQUIPMENT					
		410	420	430	440	435	445 450	465	420CT		440CT	445CT 450CT		STD FLOW	HIGH FLOW	CASE DRAIN	FRONT ELEC	DEMO DOOR	2ND AUX
SILT FENCE INSTALLER – SSL	•	•	•	•	•	•	•	•	•	•	•	•	•						
SILT FENCE INSTALLER – 3-PT HITCH		•	•	•	•	•	•	•	•	•	•	•	•						
SILT FENCE INSTALLER – 3-PT HITCH 72" OFFSET					•	•	•	•		•	•	•	•						
SILT FENCE INSTALLER – 3-PT HITCH 84" OFFSET					•	•	•	•		•	•	•	•						

FEATURES

- Simple, economical, efficient silt fence installation
- Install 36", 42" or 48" standard fence
- Place fence up to 20" depth
- Skid-steer or 3-point models (skid-steer adapter available for 3-point models)
- Spring-loaded coulter cuts through trash, roots and sod
- Static blade, no hydraulics required

APPLICATIONS

- Install silt fence around job sites

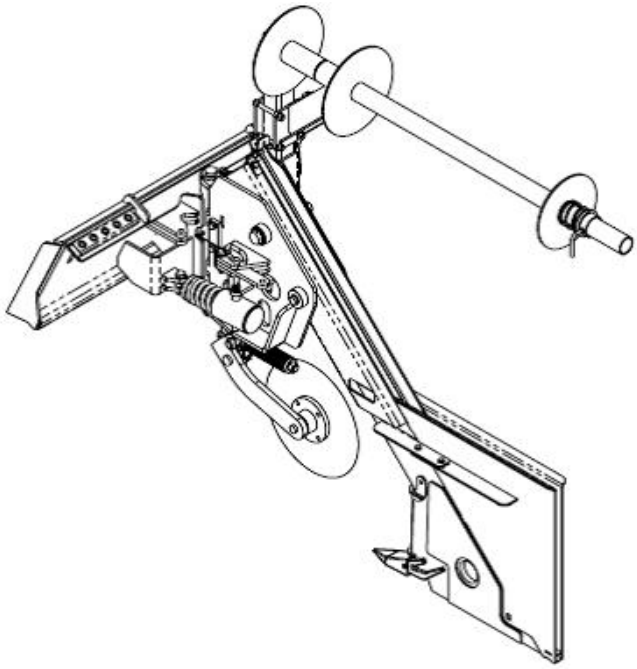

Skid Hoe

SKID STEER LOADERS/COMPACT TRACK LOADERS

Unit includes mounting bracket, boom, cylinder, bucket linkage, hoses and quick disconnects. Must order bucket for complete unit.

AUXILIARY BOOM HYDRAULICS REQUIRED (See note below for additional requirements	PART NUMBER	WEIGHT LB
SKID HOE	87487656	305

IMPORTANT:
This attachment requires base end bucket circuit port relief valve to be installed in loader control valve. Order Case part no. 87445935 for all manual control units up to late production 400 Series. Later production 400 Series manual control machines have port relief valves included. All pilot controlled units, track models, 450 models and all Alpha Series have had factory installed port relief valves since first production. Confirm port relief valve installation before operating this attachment.

ADDITIONAL EQUIPMENT (Must order bucket for complete unit)

	PART NUMBER	WEIGHT LB
10" Bucket (.9 ft³)	86547428	72
12" Bucket (1.2 ft³)	86547429	76
16" Bucket (1.9 ft³)	86547430	89
18" Bucket (2.1 ft³)	86547431	95
24" Bucket (3.1 ft³)	86547432	115

OPTIONAL EQUIPMENT

RIGID THUMB ATTACHMENT - factory installed	87487657	70
RIGID THUMB ATTACHMENT - field installed	87487658	90

MODEL COMPATIBILITY	SR130 SR150 SR160	SR175 SV185	SR200 SR210	SR220 SR240		SV250 SR250 SR270 SV280	SV300 SV340		TR270	TR310		TR320 TR340 TV370 TV450	REQ'D EQUIPMENT					
	410	420	430	440	435	445 450	465	420CT		440CT	445CT 450CT		STD FLOW	HIGH FLOW	CASE DRAIN	FRONT ELEC	DEMO DOOR	2ND AUX
SKID HOE	•	•	•	•	•	•	•	•	•	•	•	•	R					

FEATURES

- Digs trenches up to 6' deep with a skid steer
- Provides excellent mobility for digging footings
- Does not require stabilizers
- 2-1/4" x 18-1/4" cylinder provides up to 3,895 lb. breakout force
- Buckets common with 408/485 backhoes
- Thumb ready – factory or field installed

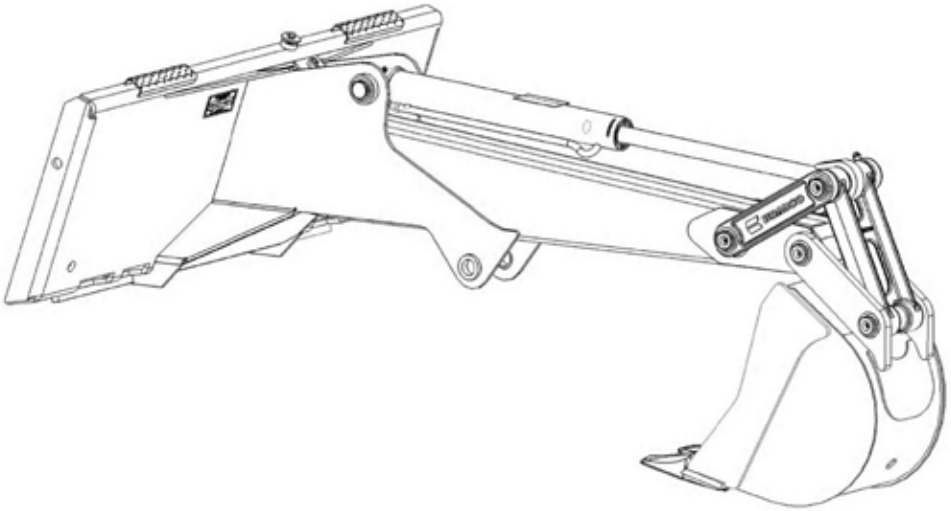

APPLICATIONS

- Excellent for digging trenches or footings

Snow Blade (Standard Duty)

SKID STEER LOADERS/COMPACT TRACK LOADERS

Unit includes mounting bracket, steel cutting edge, hydraulic angling, hoses and quick couplers.

	PART NUMBER	WEIGHT LB
SNOW BLADE, 60"	442972A1	450
SNOW BLADE, 72"	H673881	475
SNOW BLADE, 84"	H673869	500

OPTIONAL COMPONENTS (Order as needed)

Replacement Steel Edge Kit, 60"	47937193	82
Replacement Steel Edge Kit, 72"	47937194	88
Replacement Steel Edge Kit, 84"	47937195	95
Rubber Edge Kit, 60"	47937196	92
Rubber Edge Kit, 72"	47937197	100
Rubber Edge Kit, 84"	47937198	109

MODEL COMPATIBILITY	SR130 SR150 SR160		SR175 SV185	SR200 SR210	SR220 SR240		SV250 SR250 SR270 SV280	SV300 SV340		TR270	TR310		TR320 TR340 TV370 TV450	REQ'D EQUIPMENT					
	410	420		430 440		435	445 450	465	420CT		440CT	445CT 450CT		STD FLOW	HIGH FLOW	CASE DRAIN	FRONT ELEC	DEMO DOOR	2ND AUX
60" SNOW BLADE	•	•												R					
72" SNOW BLADE	•	•	•	•					•					R					
84" SNOW BLADE			•	•					•					R					

FEATURES

- Adjustable skid shoes
- Spring loaded trip protection
- Blade angle 30° maximum
- Reversible, replaceable edge
- Flat face hydraulic quick disconnects included
- Hydraulic hoses included
- 21.5" blade height
- 7 gauge reinforced moldboard
- Optional rubber edge (1.5" X 8")
- Locking bolts for light dozer applications

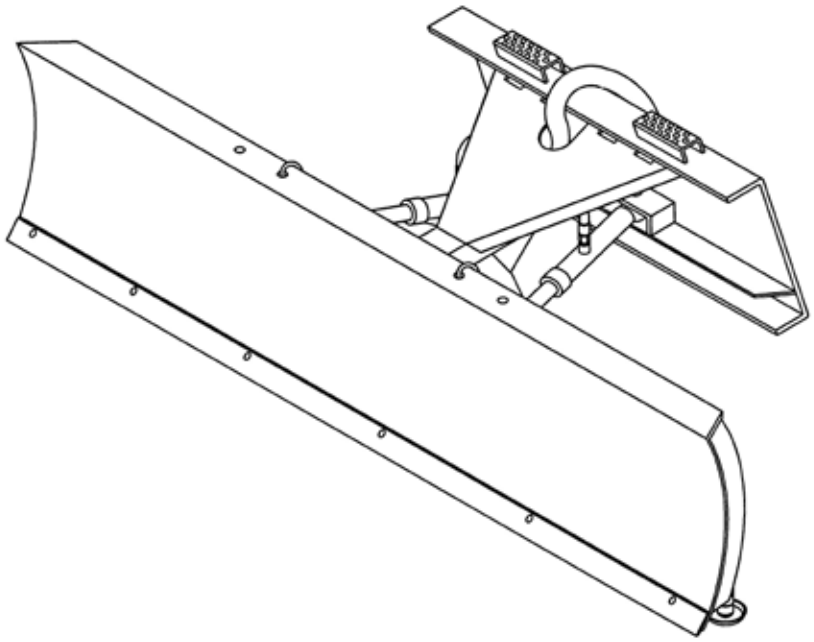

APPLICATIONS

- Snow removal
- Light dozing

REQUIREMENTS FOR OPERATION

- Standard auxiliary hydraulics

Snow Blade (Heavy Duty)

SKID STEER LOADERS/COMPACT TRACK LOADERS

Unit includes mounting bracket, hydraulic angling, hoses and quick couplers.

	PART NUMBER	WEIGHT LB
SNOW BLADE, 84", w/steel cutting edge	442973A1	1135
SNOW BLADE, 96", w/steel cutting edge	442974A1	1172
SNOW BLADE, 108", w/steel cutting edge	442975A1	1240
SNOW BLADE, 84", w/rubber cutting edge	442977A1	1076
SNOW BLADE, 96", w/rubber cutting edge	442978A1	1105
SNOW BLADE, 108", w/rubber cutting edge	442979A1	1153

OPTIONAL COMPONENTS (Order as needed)

Steel Edge Kit, 84"	47937199	160
Steel Edge Kit, 96"	47937200	176
Steel Edge Kit, 108"	47937201	192
Rubber Edge Kit, 84"	47937204	123
Rubber Edge Kit, 96"	47937205	134
Rubber Edge Kit, 108"	47937206	145
Polyurethane Edge Kit, 84"	47937208	60
Polyurethane Edge Kit, 96"	47937209	65
Top Deflector Kit, 84"	47531764	62
Top Deflector Kit, 96"	47531766	64
Top Deflector Kit, 108"	47531767	66

MODEL COMPATIBILITY	SR130 SR150 SR160	SR175 SV185	SR200 SR210	SR220 SR240		SV250 SR250 SR270 SV280	SV300 SV340		TR270	TR310		TR320 TR340 TV370 TV450	REQ'D EQUIPMENT					
	410	420	430	440	435	445 450	465	420CT		440CT	445CT 450CT		STD FLOW	HIGH FLOW	CASE DRAIN	FRONT ELEC	DEMO DOOR	2ND AUX
84" SNOW BLADE		•	•	•	•	•	•	•	•	•		•	R					
96" SNOW BLADE			•	•	•	•	•		•	•	•	•	R					
108" SNOW BLADE				•	•	•	•		•	•	•	•	R					

FEATURES

- Adjustable skid shoes
- Spring loaded trip protection
- Flat face hydraulic quick disconnects included
- Hydraulic hoses included
- 35 degree hydraulic angle in either direction
- 31.75" blade height
- 10 gauge reinforced moldboard
- Available with factory-installed steel or rubber cutting edge
- Optional polyurethane edge (1" X 6")
- Optional 2-ply rubber snow deflector (.25 X 10")
- Optional hydraulic cushion valve

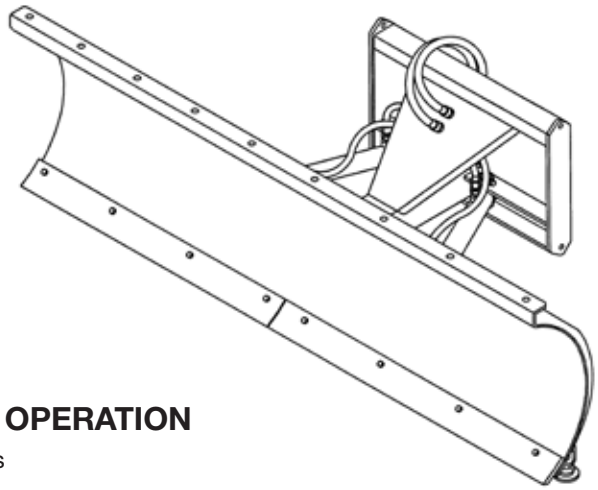

APPLICATIONS

- Snow removal

REQUIREMENTS FOR OPERATION

- Standard auxiliary hydraulics

Snow Blade, Trip Edge

SKID STEER LOADERS/COMPACT TRACK LOADERS

Optional equipment includes steel edge, hoses and quick disconnects.

STANDARD AUXILIARY BOOM HYDRAULICS REQUIRED	PART NUMBER	WEIGHT LB
TRIP EDGE SNOW BLADE, 84"	47531751	990
TRIP EDGE SNOW BLADE, 96"	47531752	1045
TRIP EDGE SNOW BLADE, 108"	47531753	1090

OPTIONAL EQUIPMENT (ORDER AS NEEDED)

Rubber Edge Kit, 84"	47531754	105
Rubber Edge Kit, 96"	47531755	115
Rubber Edge Kit, 108"	47531756	125
Polyurethane Edge Kit, 84"	47937208	60
Polyurethane Edge Kit, 96"	47937209	65
Replacement Steel Edge Kit, 84"	47531761	80
Replacement Steel Edge Kit, 96"	47531762	90
Replacement Steel Edge Kit, 108"	47531763	100
Top Deflector Kit, 84"	47531764	62
Top Deflector Kit, 96"	47531766	64
Top Deflector Kit, 108"	47531767	66
Marker Kit	84281638	5

MODEL COMPATIBILITY	SR130 SR150 SR160	SR175 SV185	SR200 SR210	SR220 SR240		SV250 SR250 SR270 SV280	SV300 SV340		TR270	TR310		TR320 TR340 TV370 TV450	REQ'D EQUIPMENT					
	410	420	430	440	435	445 450	465	420CT		440CT	445CT 450CT		STD FLOW	HIGH FLOW	CASE DRAIN	FRONT ELEC	DEMO DOOR	2ND AUX
84" SNOW BLADE	•	•	•	•	•	•	•	•	•	•			R					
96" SNOW BLADE		•	•	•	•	•	•	•	•	•	•	•	R					
108" SNOW BLADE				•	•	•	•		•	•	•	•	R					

FEATURES

- Standard 0.5" X 6" steel edge
- Hydraulic angle - 30° left and right
- Optional rubber edge (1.5" X 10")
- Optional polyurethane edge (1" X 6")
- Optional 2-ply rubber snow deflector (0.25 X 10")
- High visibility yellow moldboard
- Cutting edge trip system
- Adjustable skid shoes

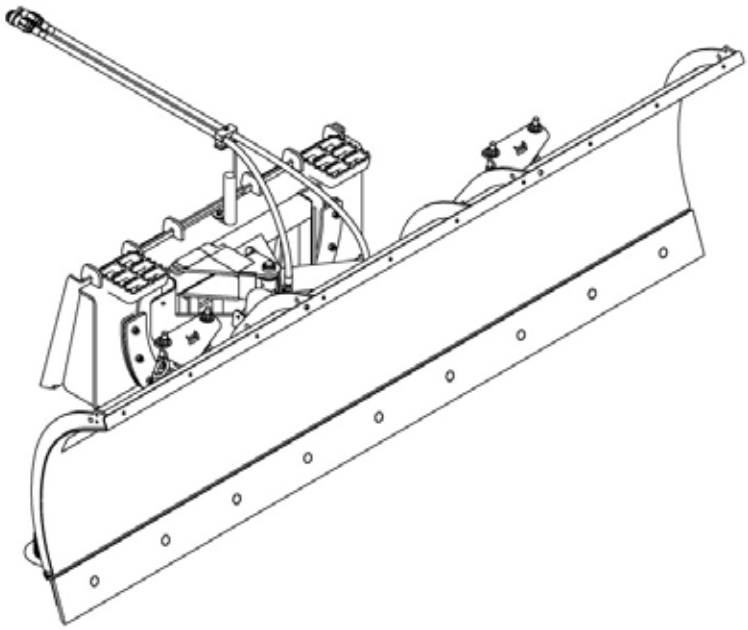

REQUIREMENTS FOR OPERATION

- Standard auxiliary hydraulics

SPECIFICATIONS			
Working Width (in.)	84	96	108
Operating Weight (lbs.)	940	990	1,030
Height (in.)	33.3	33.3	33.3
Depth	41.8	41.8	41.8
Max. Oscillation	±5°	±5°	±5°
Width @ 30° angle (in.)	72.6	83.0	93.4

Snow Blower, High Flow

SKID STEER LOADERS/COMPACT TRACK LOADERS

Unit includes skid steer mounting bracket, wire harness to boom electrical connector, hoses and hydraulic couplers.

	PART NUMBER	WEIGHT LB
72" SNOW BLOWER (F, 22-34 gpm)	84592485	1264
72" SNOW BLOWER (G - Dual, 19-34 gpm)	84421455	1264
72" SNOW BLOWER (H - Dual, 30-42 gpm)	84592487	1264
84" SNOW BLOWER (F, 22-34 gpm)	84592489	1342
84" SNOW BLOWER (G - Dual, 19-34 gpm)	84421456	1342
84" SNOW BLOWER (H - Dual, 30-42 gpm)	84592491	1342
96" SNOW BLOWER (H - Dual, 30-42 gpm)	84592493	1420
84" SNOW BLOWER (G - Dual, EHF) Includes EHF harness. No optional wiring harness	47358362	1290
96" SNOW BLOWER (G - Dual, EHF) Includes EHF harness. No optional wiring harness	47358363	1370

OPTIONAL EQUIPMENT (Must order one electric kit for complete unit. Electric kit not required for EHF units.)

Universal Electrical Control Package. Controls chute rotation and deflector. Package includes magnetically mounted in-cab control box, boom wiring harness and wiring to battery. Connects to wiring harness supplied with blower. For machines without Front Electric Control Kit.	87023320	5
Truck Loading Chute Kit	47981840	255

MODEL COMPATIBILITY	SR130 SR150 SR160		SR175 SV185	SR200 SR210	SR220 SR240		SV250 SV280	SR250 SR270 SV300 SV340			TR270	TR310	TV370	TR320 TR340 TV450	REQ'D EQUIPMENT						
	410	420		430	440	435 445	450 465		420CT	440CT			445CT 450CT		STD FLOW	HIGH FLOW	EHF	CASE DRAIN	FRONT ELEC	DEMO DOOR	2ND AUX
72" SNOW BLOWER (F, 22-34 gpm)		•	•	•		•			•		•					R			O		
72" SNOW BLOWER (G - Dual, 19-34 gpm)		•	•	•					•		•					R			O		
72" SNOW BLOWER (H - Dual, 30-42 gpm)					•		•	•		•						R			O		
84" SNOW BLOWER (F, 22-34 gpm)			•	•		•			•		•	•				R			O		
84" SNOW BLOWER (G - Dual, 19-34 gpm)			•	•					•		•	•				R			O		
84" SNOW BLOWER (H - Dual, 30-42 gpm)					•	•	•	•		•			•	•		R			O		
96" SNOW BLOWER (H - Dual, 30-42 gpm)						•	•	•					•	•		R			O		
84" SNOW BLOWER (G - Dual, EHF)								•						•			R		R		
96" SNOW BLOWER (G - Dual, EHF)								•						•			R		R		

Snow Blower, High Flow (Continued next page)

Snow Blower, High Flow

SKID STEER LOADERS/COMPACT TRACK LOADERS

FEATURES

- Two-stage hydraulic blowers blow snow up to 45 feet
- Direct drive motors eliminate moving parts and wear
- Electro-hydraulically controlled, poly-lined chute and deflector
- Bolt-on replaceable wear edge, 1/2" x 4"
- 3/4" main drive hoses
- 5/8" supply hoses
- Adjustable skid shoes

REQUIREMENTS FOR OPERATION

- High flow hydraulics required
  Enhanced High Flow (EHF) on specified units
- Front electric kit installed on loader or complete control package

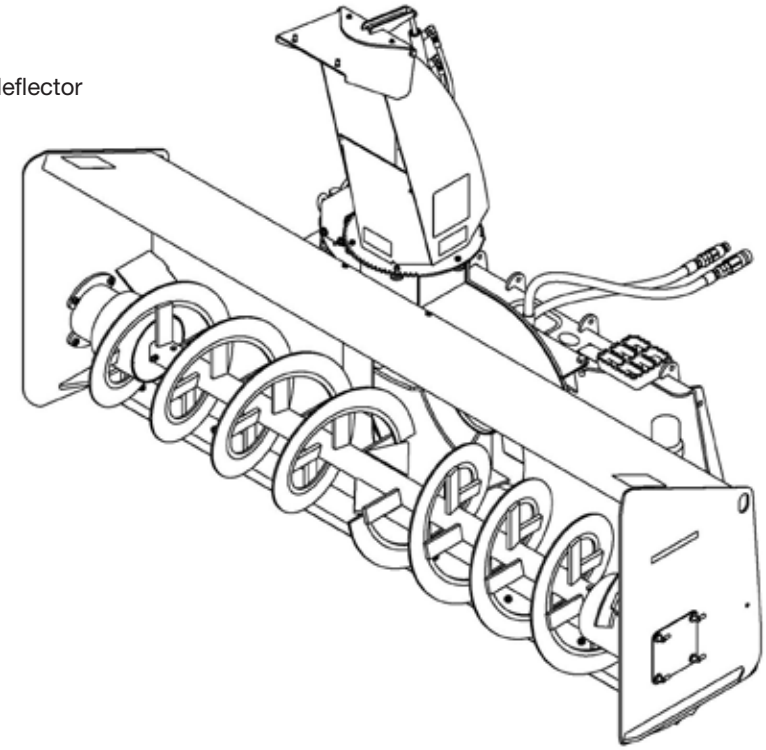

SPECIFICATIONS								
Model	**72F**	**72G**	**72H**	**84F**	**84G**	**84H**	**96G**	**96H**
Cut Height (in.)	36	36	36	36	36	36	36	36
Flow Range (gpm)	22-34	19-34	30-42	22-34	19-34	30-42	19-34	30-42
Auger Drive	Single motor	Dual motor	Dual motor	Single motor	Dual motor	Dual motor	Dual motor	Dual motor
Auger Diameter (in.)	18	18	18	18	18	18	18	18
Fan Drive	Single motor	Single motor	Single motor	Single motor	Single motor	Single motor	Single motor	Single motor
Fan Diameter	26	26	26	26	26	26	26	26
No. of fan blades	4	4	4	4	4	4	4	4

Snow Blower, Standard Flow

SKID STEER LOADERS/COMPACT TRACK LOADERS

Unit includes skid steer mounting bracket, wire harness to boom electrical connector, hoses and hydraulic couplers.

	PART NUMBER	WEIGHT LB
SNOW BLOWER, 60" (D, 14 - 21 gpm)	84421457	866
SNOW BLOWER, 72" (D, 14 - 21 gpm)	84421458	924
SNOW BLOWER, 72" (E, 18 - 27 gpm)	84421459	924
SNOW BLOWER, 84" (E, 18 - 27 gpm)	84421460	985

OPTIONAL EQUIPMENT (Must order one for complete unit.)

Electric Harness (14 pin round connector - all 40XT, 60XT, 70XT and 75XT, 85XT, 90XT, 95XT built after 9/1/2001), all 400 series and all Alpha series	87023319	1
Universal Electrical Control Package. Controls chute rotation and deflector. Package includes magnetically mounted in-cab control box, boom wiring harness and wiring to battery. Connects to wiring harness supplied with blower. For machines without Electric Control Kit.	87023320	6

MODEL COMPATIBILITY	SR130 SR150 SR160	410	420	SR175 SV185	SR200 SR210 SR220 SR240 430 440	SV250 SV280 435 445	SR250 SR270 450	SV300 SV340 465	420CT	TR270 440CT	TR310 445CT 450CT	TR320 TR340 TV370 TV450	REQ'D EQUIPMENT STD FLOW	HIGH FLOW	CASE DRAIN	FRONT ELEC	DEMO DOOR	2ND AUX
SNOW BLOWER, 60" (D, 14 - 21 gpm)	•	•											R			O		
SNOW BLOWER, 72" (D, 14 - 21 gpm)	•			•									R			O		
SNOW BLOWER, 72" (E, 18 - 27 gpm)		•	•		•	•	•	•	•	•			R			O		
SNOW BLOWER, 84" (E, 18 - 27 gpm)					•	•	•	•		•	•	•	R			O		

FEATURES

- Two-stage hydraulic blowers blow snow up to 35 ft.
- Excellent visibility
- Electro-hydraulically controlled poly-lined chute and deflector
- High volume 24-1/2" shroud opening with 14" diameter auger and 18" diameter fan
- Wear resistant steel edge 3/8" x 3"
- 12 gauge reinforced wrapper
- Adjustable skid shoes

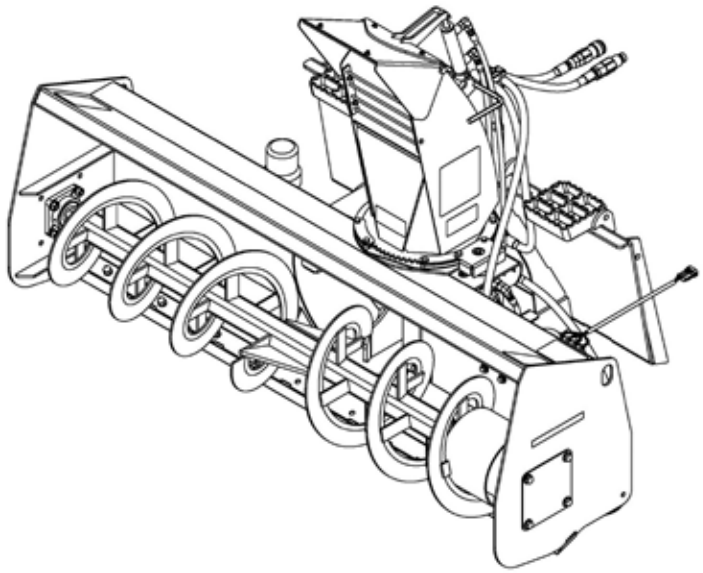

REQUIREMENTS FOR OPERATION

- Standard auxiliary hydraulics
- Front electric kit installed on loader or complete electrical control package

Snow Bucket

SKID STEER LOADERS/COMPACT TRACK LOADERS

	PART NUMBER	WEIGHT LB
MEDIUM DUTY SNOW BUCKET, 84"	87324180	725
MEDIUM DUTY SNOW BUCKET, 96"	87324181	775
HEAVY DUTY SNOW BUCKET, 96"	87324182	980
HEAVY DUTY SNOW BUCKET, 108"	87324183	1060

ADDITIONAL EQUIPMENT (Order as needed)

Bolt-on Cutting edge kit 84" (incl. reversible edge and hardware)	87324184	141
Bolt-on Cutting edge kit 96"(incl. reversible edge and hardware)	87324185	161
Bolt-on cutting edge kit 108" (incl. reversible edge and hardware)	87324186	181

MODEL COMPATIBILITY	SR130 SR150 SR160	SR175 SV185	SR200 SR210	SR220 SR240		SV250 SR250 SR270 SV280	SV300 SV340		TR270	TR310		TR320 TR340 TV370 TV450	REQ'D EQUIPMENT					
	410	420	430	440	435	445 450	465	420CT		440CT	445CT 450CT		STD FLOW	HIGH FLOW	CASE DRAIN	FRONT ELEC	DEMO DOOR	2ND AUX
MEDIUM DUTY SNOW BUCKET, 84"	•	•	•	•	•			•	•	•								
MEDIUM DUTY SNOW BUCKET, 96"			•	•	•			•	•	•								
HEAVY DUTY SNOW BUCKET, 96"				•	•	•	•		•	•	•	•						
HEAVY DUTY SNOW BUCKET, 108"						•	•				•	•						

FEATURES

- Move large volumes of snow or other loose material efficiently
- Cut out back plate for improved visibility
- Pre-drilled cutting edges for bolt on edge

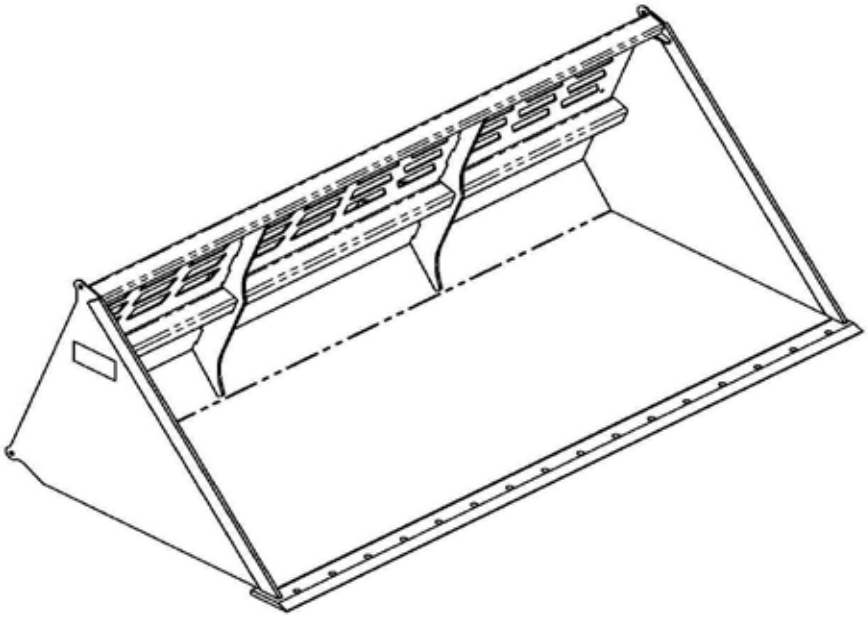

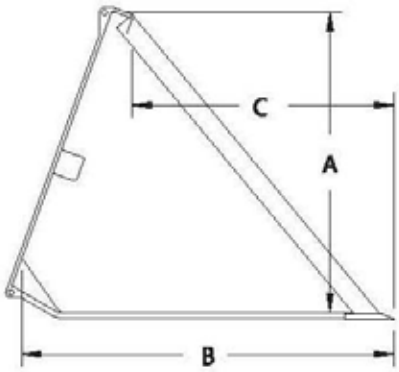

SPECIFICATIONS					
	Height A	Depth B	Leading Edge C	Struck Cap.	Heaped Cap.
84" Medium Duty	30"	42"	29.7"	1.14 yd^3	1.47 yd^3
96" Medium Duty	30"	42"	29.7"	1.31 yd^3	1.70 yd^3
96" Heavy Duty	38"	46"	32.5"	1.83 yd^3	2.36 yd^3
108" Heavy Duty	38"	46"	32.5"	2.07 yd^3	2.67 yd^3

Snow Push

SKID STEER LOADERS/COMPACT TRACK LOADERS

	PART NUMBER	WEIGHT LB
SNOW PUSH - LOW PROFILE - 72"	47625941	605
SNOW PUSH - LOW PROFILE - 84"	47625942	670
SNOW PUSH - LOW PROFILE - 96"	47625943	735
SNOW PUSH - LOW PROFILE - 120"	47625944	865

OPTIONAL COMPONENTS – FACTORY INSTALLED (Order as needed)

PULL BACK KIT with rubber edge		
PULL BACK KIT - 72" LP	47645845	185
PULL BACK KIT - 84" LP	47645846	215
PULL BACK KIT - 96" LP	47645847	245
PULL BACK KIT - 120" LP	47645848	300

OPTIONAL COMPONENTS – FIELD INSTALLED (Order as needed)

PULL BACK KIT without rubber edge		
PULL BACK KIT - 72" LP	47625945	155
PULL BACK KIT - 84" LP	47625946	175
PULL BACK KIT - 96" LP	47625947	200
PULL BACK KIT - 120" LP	47625948	250
RUBBER EDGE KIT (Use as replacement edge for base push or add-on for pullback kit)		
RUBBER EDGE KIT - 72" LP	47626032	90
RUBBER EDGE KIT - 84" LP	47626033	110
RUBBER EDGE KIT - 96" LP	47626034	125
RUBBER EDGE KIT - 120" LP	47626035	135

MODEL COMPATIBILITY	SR130 SR150 SR160	SR175 SV185	SR200 SR210	SR220 SR240		SV250 SR250 SR270 SV280	SV300 SV340		TR270	TR310			TR320 TR340 TV370 TV450	REQ'D EQUIPMENT					
	410	420	430	440	435	445 450	465	420CT			440CT	445CT 450CT		STD FLOW	HIGH FLOW	CASE DRAIN	FRONT ELEC	DEMO DOOR	2ND AUX
SNOW PUSH 72" LP	•	•	•	•	•			•	•		•								
SNOW PUSH 84" LP	•	•	•	•	•	•	•	•	•	•	•	•	•						
SNOW PUSH 96" LP			•	•	•	•	•		•	•	•	•	•						
SNOW PUSH 120" LP						•	•					•	•						

FEATURES

- Moves large volumes of snow efficiently
- Draws back snow from confined areas with optional pull back kit
- Reversible, 1" x 8" rubber edge on main blade
- Reversible, replaceable ¾" x 5" wear shoes of abrasion resistant AR400 steel

APPLICATIONS

- Snow, waste water, manure, feed lot and flood clean-up

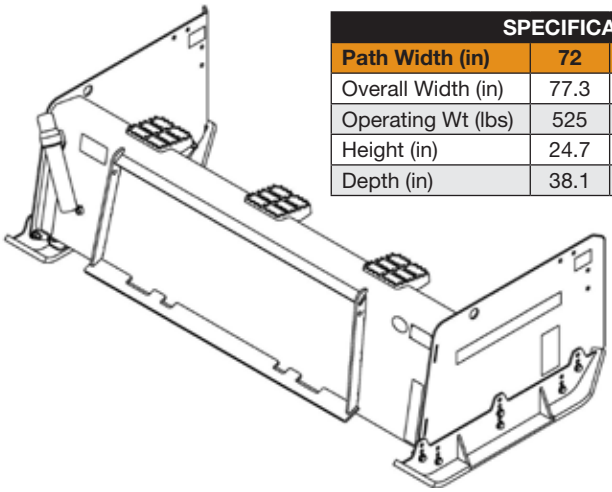

SPECIFICATIONS				
Path Width (in)	**72**	**84**	**96**	**120**
Overall Width (in)	77.3	89.3	101.3	125.3
Operating Wt (lbs)	525	570	610	705
Height (in)	24.7	24.7	24.7	24.7
Depth (in)	38.1	38.1	38.1	38.1

Snow Push – Sectional

SKID STEER LOADERS/COMPACT TRACK LOADERS

	PART NUMBER	WEIGHT LB
SECTIONAL SNOW PUSH – 8 FT.	48026413	1300
SECTIONAL SNOW PUSH – 10.5 FT.	48026414	1942

MODEL COMPATIBILITY	SR130 SR150 SR160	SR175 SV185	SR200 SR210		SR220 SR240	SV250 SR250 SR270 SV280	SV300 SV340		TR270 TR310	TR320 TR340 TV370 TV450	REQ'D EQUIPMENT					
	410	420	430	440	435	445 450	465	420CT	440CT	445CT 450CT	STD FLOW	HIGH FLOW	CASE DRAIN	FRONT ELEC	DEMO DOOR	2ND AUX
SECTIONAL SNOW PUSH – 8 FT.		•	•	•	•	•	•	•	•	•						
SECTIONAL SNOW PUSH – 10.5 FT.			•	•	•	•	•		•	•						

FEATURES

- Individual moldboard sections and articulating side panels move up and down independently to contour to the pavement, parking curbs and other obstacles, scraping cleanly down to the bare pavement on the first pass
- Interchangeable quick connect coupler mounting system
- Patented Slip-Hitch allows the entire pusher to move up and down independently of the machine pushing it, automatically self-leveling and perfectly adjusting the pusher to the pavement every time
- Individual moldboard sections and articulating side panels skip over curbs and other obstacles up to 9" in height to prevent operator injury and equipment damage
- Every part of the sectional pusher is removable, allowing just the damaged part or component to be replaced
- Hardox 450 hardened steel shoes and cutting edges

APPLICATIONS

- Snow and ice removal
- Moving waste water, manure and feed lot

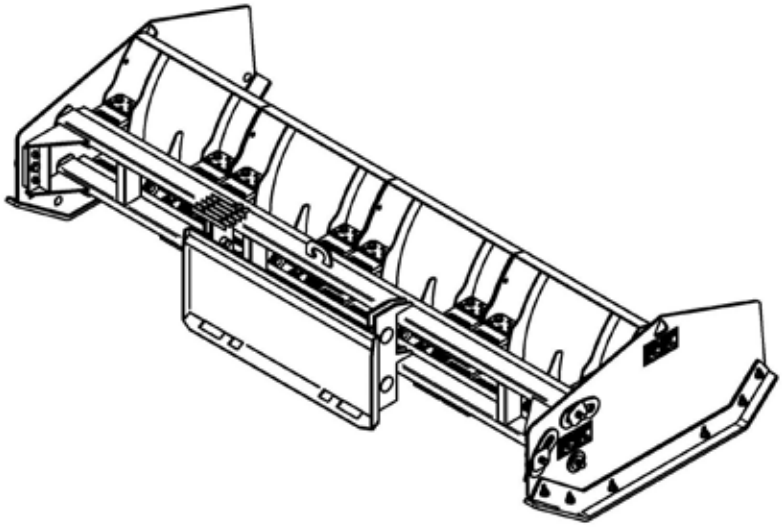

SPECIFICATIONS		
Model	**LD-8**	**LD-10.5**
Overall Width – in (m)	96 (2.4)	126 (3.2)
Operating Wt – lbs (kg)	1,150 (522)	1,792 (813)
Height – in (mm)	32 (813)	
Depth – in (mm)	58 (1473)	
Number of sections	3	4

Stump Grinder

SKID STEER LOADERS/COMPACT TRACK LOADERS

Complete skid-steer mounting bracket, wire harness to boom electrical connector, hoses and hydraulic couplers.

ELECTRIC CONTROL KIT REQUIRED AND AUXILIARY HYDRAULICS AS NOTED	PART NUMBER	WEIGHT LB
STUMP GRINDER, Model SG26, standard flow (requires standard flow boom hydraulics, 15 - 22 gpm)	87050300	790
STUMP GRINDER, Model SG30, high flow (requires high flow boom hydraulics, 25 - 42 gpm)	87050301	860

ADDITIONAL COMPONENTS (ORDER AS NEEDED)

Electrical control package, controls arm swing & depth. Package includes magnetically mounted, in-cab control box, boom wiring harness & wiring to battery. Connects to wiring harness supplied with stump grinder. For loaders not equipped with front electric kit.	87050304	3
Wire harness adapter (adapts pre 9/1/2002 75XT, 85XT, 90XT, 95XT with 8-pin connector to 14-pin connector)	87048529	2

MODEL COMPATIBILITY	SR130	SR150 SR160	SR175 SV185		SR200 SR210	SR220 SR240		SV250 SR250 SR270 SV280	SV300 SV340		TR270	TR310		TR320 TR340 TV370 TV450	REQ'D EQUIPMENT					
		410	420	430		440	435	445 450	465	420CT		440CT	445CT 450CT		STD FLOW	HIGH FLOW	CASE DRAIN	FRONT ELEC	DEMO DOOR	2ND AUX
STUMP GRINDER – STD FLOW (15-22)		•	•	•	•	•	•	•	•	•	•	•	•	•	R			R		
STUMP GRINDER – HIGH FLOW (25-42)			•	•	•	•	•	•	•	•	•	•	•	•		R	R	R		

SPECIFICATIONS	SG26 Standard Flow	SG30 High Flow
Overall Length	84 in.	84 in.
Overall Width	58 in.	58 in.
Overall Height	37 in.	37 in.
Weight (approx)	790 lb.	860 lb.
Wheel Diameter	26 in.	30 in.
Cutting Diameter	29 in.	33 in.
Number of Teeth	28	28
Flow Requirement	15-22 gpm	25-42 gpm
Max Pressure (continuous)	3000 psi	3000 psi
Wheel Speed	575-850 rpm	515-860 rpm
Lateral Sweep	60 degrees	60 degrees
Vertical Lift	43 degrees	43 degrees

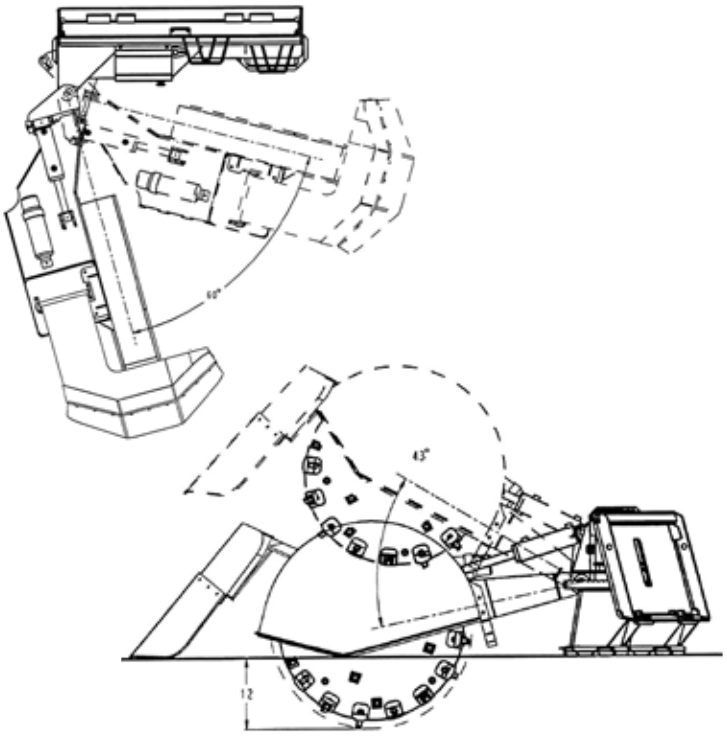

Stump Grinders (Continued next page)

Stump Grinder

SKID STEER LOADERS/COMPACT TRACK LOADERS

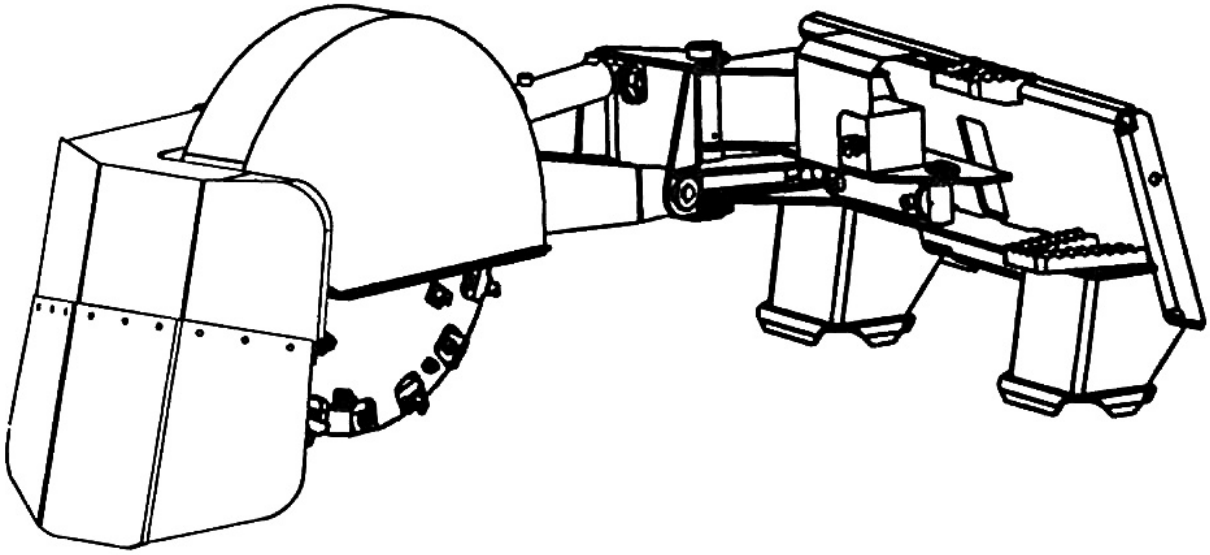

Three-Point Hitch

SKID STEER LOADERS/COMPACT TRACK LOADERS

	PART NUMBER	WEIGHT LB
THREE POINT HITCH	48145926	235

MODEL COMPATIBILITY	SR130 SR150 SR160	SR175 SV185	SR200 SR210	SR220 SR240	SV250 SR250 SR270 SV280	SV300 SV340	TR270 TR310	TR320 TR340 TV370 TV450	REQ'D EQUIPMENT					
	410	420	430	440 435	445 450	465	420CT 440CT	445CT 450CT	STD FLOW	HIGH FLOW	CASE DRAIN	FRONT ELEC	DEMO DOOR	2ND AUX
THREE POINT HITCH ADAPTER	•	•	•	•	•	•	•	•						

APPLICATIONS

- Attaches like regular bucket, allows hookup to Cat I or Cat II equipment
- Bottom two arms slide to allow quick and easy hookup and maximum versatility

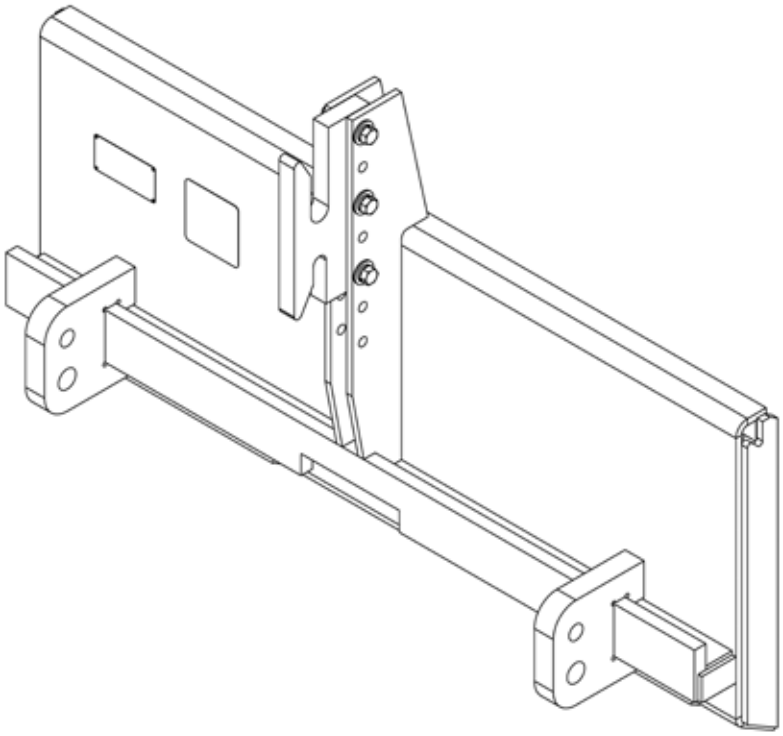

Tiller

SKID STEER LOADERS/COMPACT TRACK LOADERS

Unit includes hoses and quick disconnects.

	PART NUMBER	WEIGHT LB
HT52 - 52" TILLER (14-17 gpm)	84412545	880
HT52 - 52" TILLER (18-25 gpm)	87311526	880
HT66 - 66" TILLER (14-17 gpm)	84412546	1100
HT66 - 66" TILLER (18-25 gpm)	87311527	1100
HT66H - 66" TILLER HF (28-40 gpm)	87343219	1100
HT78H - 78" TILLER HF (28-40 gpm)	87343220	1370

ADDITIONAL COMPONENTS (Order as Needed)

SCARIFIER KIT for HT52	87311523	40
SCARIFIER KIT for HT66, HT66H	87311524	50
SCARIFIER KIT for HT78H	87343216	60

MODEL COMPATIBILITY	SR130 SR150 SR160	410	SR175 SV185	420	SR200 SR210	430	SR220 SR240	440	435	SV250 SR250 SR270 SV280	445 450	SV300 SV340	465	420CT	TR270	TR310	440CT	445CT 450CT	TR320 TR340 TV370 TV450	REQ'D EQUIPMENT STD FLOW	HIGH FLOW	CASE DRAIN	FRONT ELEC	DEMO DOOR	2ND AUX
52" TILLER – STD FLOW (14-17)	•																			R					
52" TILLER – STD FLOW (18-25)		•	•	•	•	•	•	•	•	•	•	•	•	•	•	•	•	•	•	R					
66" TILLER – STD FLOW (14-17)	•																			R					
66" TILLER – STD FLOW (18-25)		•	•	•	•	•	•	•	•	•	•	•	•	•	•	•	•	•	•	R					
66" TILLER – HIGH FLOW (28-40)			•	•	•	•	•	•	•	•	•	•	•	•	•	•	•	•	•		R	R			
78" TILLER – HIGH FLOW (28-40)							•	•	•			•	•			•	•	•	•		R	R			

FEATURES

- Industry exclusive optional scarifiers pre-cuts rough crust to improve tiller efficiency
- Front hood is heavily ribbed which levels till as a leveling blade
- Exclusive off-set hitch on 52" allows tight cut next to obstacles
- Industry exclusive on 66" and 78" with dual hitch both off-set and center mount
- Productivity is further improved with high torque efficient chain system and large frame to handle trash
- Easily adjusted chain tension with CAM lock
- Dual rotation with bi-directional tines standard
- Single wide skid-shoe protects drive and controls depth

SPECIFICATIONS				
	HT52	HT66	HT66H	HT78H
Working Width (in.)	52	66	66	78
Overall Width (inches)	67.8	81.8	81.8	94.8
Weight – approx. (lbs.)	730	950	950	1220
Cutting Depth (in.)	6	6	6	6
Number of Tines	24	32	32	40
Flow Requirement (gpm)	14-17 18 - 28	14-17 18 - 28	28-40	28-40

APPLICATIONS

- Use for jobsite leveling, soil mixing, seedbed preparation

REQUIREMENTS FOR OPERATION

- Standard auxiliary hydraulics (as indicated)
- High flow auxiliary hydraulics (as indicated)

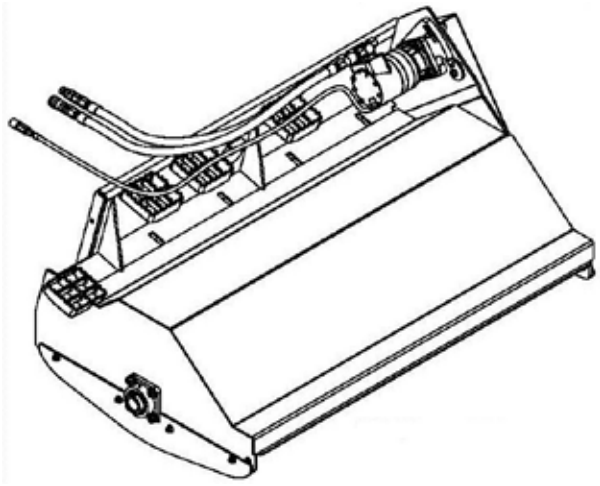

Tilt-Attach

SKID STEER LOADERS/COMPACT TRACK LOADERS

Unit includes hoses and quick disconnects.

REQUIRES STANDARD AUXILIARY BOOM HYDRAULICS	PART NUMBER	WEIGHT LB
TILT-ATTACH, Heavy Duty Basic	87383459	400
TILT-ATTACH, Heavy Duty with electric diverter valve	84257968	425

COMPLETING KITS (Must select one for Tilt-Attach with diverter valve)

UNIVERSAL CONTROL KIT - Includes wire harness, switchbox to be mounted in cab and connections for 12V power. For loaders not equipped with Front Electric Kit	84257970	20
HARNESS ADAPTER - Includes adapter to connect to 14 pin harness. For loaders equipped with Front Electric Kit	84257971	5

MODEL COMPATIBILITY	SR130 SR150 SR160	SR175 SV185	SR200 SR210	SR220 SR240		SV250 SR250 SR270 SV280	SV300 SV340		TR270			TR320 TR340 TV370 TV450	REQ'D EQUIPMENT					
	410	420	430	440	435	445 450	465	420CT		440CT	445CT 450CT		STD FLOW	HIGH FLOW	CASE DRAIN	FRONT ELEC	DEMO DOOR	2ND AUX
TILT-ATTACH - HD BASIC	•	•	•	•	•	•	•	•	•	•	•	•	R					O
HD TILT-ATTACH - HD DIVERTER VALVE		•	•	•	•	•	•	•	•	•	•	•	R			O		

FEATURES

- Independently control attachment angle relative to loader
- Excellent tool for precision grading and contouring
- Mounts between loader and attachment
- Basic model for use with attachments not requiring aux. hydraulics or loader must be equipped with 2nd auxiliary
- Diverter valve model may be used with most standard flow hydraulic attachments

REQUIREMENTS FOR OPERATION

- Standard auxiliary hydraulics
- 2 auxiliary for Basic model if used with hydraulic attachments
- Front Electric Kit or Universal Control Kit for diverter valve model if used with hydraulic attachments

SPECIFICATIONS	
	Heavy Duty
Rotation	+/- 18°
Cylinder Bore	2.50"
Cylinder Rod Diameter	1.25"
Cylinder Stroke	3.0"
Attachment Offset	5.4"

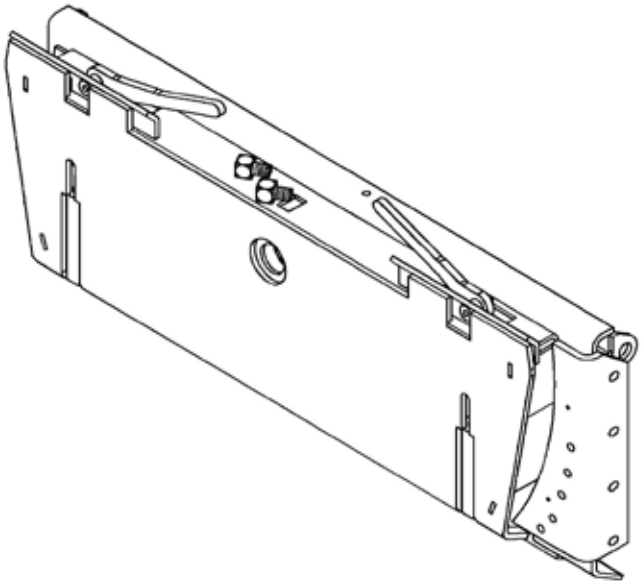

Tracks, Steel

SKID STEER LOADERS/COMPACT TRACK LOADERS

Track sets include tracks, hardware and ratchet/strap installation tool. Order wheel spacer kits separately as specified.

	PART NUMBER	WEIGHT LB
F-Series Cast Tracks for 27/10.50x15 tires	84406432	840
F-Series Cast Tracks for 10.00x16.5 tires	87324797	918
F-Series Cast Tracks for 31.5/13x16.5 tires	87324798	839
F-Series Cast Tracks for 10x16.5 tires	87324799	969
F-Series Cast Tracks for 12.00x16.5 tires	87324800	1018
F-Series Cast Tracks for 33/15.50x16.5 tires	87324801	1145
F-Series Cast Tracks for 12.00x16.5 tires	87324802	1072
F-Series Cast Tracks for 33/15.50x16.5 tires	87324804	1200
F-Series Cast Tracks for 12.00x16.5 tires	87324805	1072
F-Series Cast Tracks for 33/15.50x16.5 tires	87324806	1206
F-Series Cast Tracks for 12.00x16.5 tires	87324807	1125
F-Series Cast Tracks for 33/15.50x16.5 tires	87324808	1266

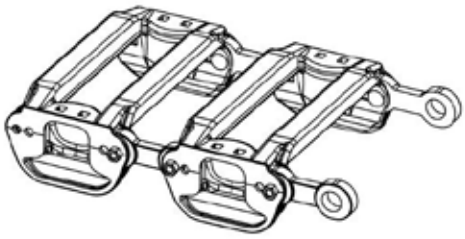

Tracks are not compatible with semi-pneumatic, liquid filled, foam filled or any non-pneumatic tires.

ADDITIONAL COMPONENTS (Order as Needed)

Wheel spacer kit, 1-1/2" (M16)	84426158	70
Wheel spacer kit, 2" (M16)	84426159	84

MODEL COMPATIBILITY	SR130 SR150 SR160		410 420 (<S3)		420-S3 430 440		430 440	SR175 SV185 SR200 SR210			435 445		450		465		SR220 SR240 SR250 SR270		SV250 SV280 SV300 SV340		SR220 SR240 SR250 SV250 SR270 SV280 SV300 SV340
			40XT		60XT 70XT		60XT 70XT				75XT 85XT		90XT		95XT						
	10.00X16.5	27/10.50X15	10.00X16.5	31.5/13X16.5	10.00X16.5	12.00X16.5	33/15.5X16.5	10.00X16.5	12.00X16.5	33/15.5X16.5	12.00X16.5	33/15.5X16.5	12.00X16.5	33/15.5X16.5	12.00X16.5	33/15.5X16.5	12.00X16.5	33/15.5X16.5	12.00X16.5	33/15.5X16.5	14x17.5
84406432		•																			
87324797			•																		
87324798				•																	
87324799					•			•													
87324800						•			•												
87324801							•														
87324802											•										
87324804												•									
87324805													•								
87324806										•				•							
87324807															•		•		•		
87324808																•		•		•	
WHEEL SPACERS																					
84426158								SR	•	•							•	•			
84426159			•	•		•	•	SV				•		•		•			•*	•*	

*Minimal clearance to boom with 50mm stops.

Tree Shovel

SKID STEER LOADERS/COMPACT TRACK LOADERS

	PART NUMBER	WEIGHT LB
TREE SHOVEL, 36"	87383455	260
TREE SHOVEL, 42"	87383456	360
TREE SHOVEL, 48"	87383457	460

MODEL COMPATIBILITY	SR130 SR150 SR160	SR175 SV185	SR200 SR210	SR220 SR240		SV250 SR250 SR270 SV280	SV300 SV340		TR270	TR310		TR320 TR340 TV370 TV450	REQ'D EQUIPMENT					
	410	420	430	440	435	445 450	465	420CT		440CT	445CT 450CT		STD FLOW	HIGH FLOW	CASE DRAIN	FRONT ELEC	DEMO DOOR	2ND AUX
36" TREE SHOVEL	•	•	•	•	•	•	•	•	•	•	•	•						
42" TREE SHOVEL	•	•	•	•	•	•	•	•	•	•	•	•						
48" TREE SHOVEL	•	•	•	•	•	•	•	•	•	•	•	•						

FEATURES

- Dig holes for incoming trees
- Transplant trees and shrubbery
- Transport/load prepackaged trees
- Place large decorative stones easily
- Constructed of 3/8" plate with sharp tapered edge

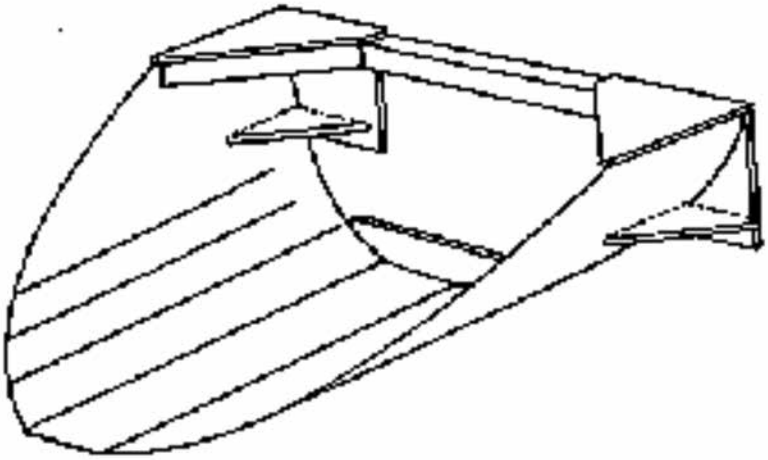

Tree Spade

SKID STEER LOADERS/COMPACT TRACK LOADERS

For specified skid-steer loaders equipped with standard auxiliary boom hydraulics.
Includes complete spade with standard 14-pin control harness, hoses and quick couplers.

REAR STABILIZERS RECOMMENDED.*	PART NUMBER	WEIGHT LB
Internal Frame, 25° Blade Angle, Truncated Spades		
2625 TREE SPADE	87050389	1150
3625 TREE SPADE	87050390	1640
4425 TREE SPADE	87050391	1875

* See "Rear Stabilizer" pages for rear stabilizer options.

ADDITIONAL COMPONENTS (Order as Needed)

Electrical control package includes magnetically mounted control handle for cab, wire harness to tree spade connector and battery (Required for all XT models). Also for 400 series and Alpha series w/o front electric kit.	87050392	3

MODEL COMPATIBILITY	SR130 SR150 SR160		SR175 SV185	SR200 SR210	SR220 SR240			SV250 SR250 SR270 SV280	SV300 SV340		TR270	TR310		TR320 TR340 TV370 TV450	REQ'D EQUIPMENT					
	410	420		430		440 435	445 450		465	420CT		440CT	445CT 450CT		STD FLOW	HIGH FLOW	CASE DRAIN	FRONT ELEC	DEMO DOOR	2ND AUX
2625 TREE SPADE			•	•	•	•	•	•	•	•	•	•	•	•	R			O		
3625 TREE SPADE						•	•	•	•		•	•	•	•	R			O		
4425 TREE SPADE							•		•				•	•	R			O		

SPECIFICATIONS			
DESCRIPTION	**2625**	**3625**	**4425**
Ball Diameter (inches)	18-26	24-36	36-44
Optional Ball Diameter (inches)	—	—	—
Tree Diameter (inches)	1.5 - 2.5	2.0 - 3.5	3.0 - 4.5
Ball weight (lbs.)	150 - 300	250 - 1,000	1,200 - 1,400
Spade weight (lbs.)	1,100	1,500	1,825
Blade Style & Angle	25° Mod. Truncated	25° Mod. Truncated	25° Mod. Truncated
Under Cutter	No	No	No
Frame Style	Internal	Internal	Internal
Number of Blades	3	3	4
DIMENSIONS			
Width (inches)	54	66	63
Width - Gate Open (inches)	67	89	107
Height (inches)	51	65	65
Length (inches)	63	68	70
Max. Opening (inches)	29	40	33
Max. Digging Depth (inches)	22	31	31

Tree Spades (Continued next page)

Tree Spade

SKID STEER LOADERS/COMPACT TRACK LOADERS

FEATURES

- Designed for production tree harvesting, nursery applications and landscaping
- Low profile blade towers to allow machine to fit between closely planted trees
- High strength “T1” steel blade material
- Two year warranty
- Overlapping blades to clear cut roots
- Adjustable blade slides to maintain alignment
- Adjustable blade depth control legs
- Wide gate opening to clear trees easily
- Produces round balls that actually fit wire baskets available from many vendors
- Built for heavy use at production nurseries and rental centers
- Straight blade design has less resistance in penetrating soil
- Inside frame allows work in tight areas
- Blade towers use high density plastic sides to eliminate greasing
- Produce several uniform ball sizes with 1 set of blades
- Inside frame style allows compressing tree ball in the basket

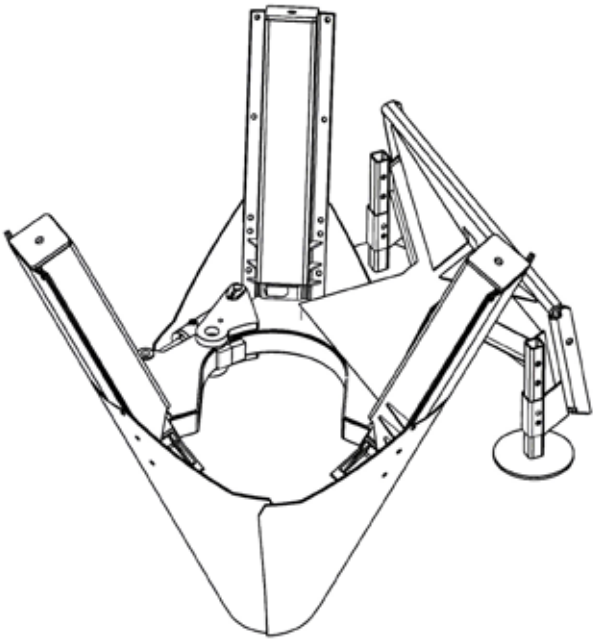

Trencher

SKID STEER LOADERS/COMPACT TRACK LOADERS

PREPACKAGED COMPLETE TRENCHERS. Includes drive head, boomer/crumber and chain as indicated. Also includes mounting brackets, manual side shift, hoses and quick couplers. Optional hydraulic side shift also available separately.

	PART NUMBER	WEIGHT LB
MODEL 625 TRENCHER-STD FLOW (14-22 gpm) with 36" Boom/crumber, 86620053 and 6x36 TES chain, 9862926.	47725417	1010
MODEL 625 TRENCHER-STD FLOW (14-22 gpm) with 48" Boom/crumber, 86620055 and 6x48 TES chain, 9862932.	47725418	1060
MODEL 625 TRENCHER-STD FLOW (14-22 gpm) with 36" Boom/crumber, 86620053 and 6x36 R&F chain, 86621858.	51519264	1240

CONFIGURABLE TRENCHERS. Basic trencher includes trencher head, mounting brackets, manual side shift, hoses and quick couplers. Must specify boom and chain options separately. Optional hydraulic side shift also available separately.

	PART NUMBER	WEIGHT LB
MODEL 625 TRENCHER – STD FLOW (14-22 gpm)	87050942	755
MODEL 640 TRENCHER – HIGH FLOW (25-28 gpm)	84421969	880
MODEL 640 TRENCHER – HIGH FLOW (29-35 gpm)	87554974	880

MODEL COMPATIBILITY	SR130 SR150 SR160	SR175 SV185		SR200 SR210	SR220	SV250 SR250	SV300	SR240 SR270 SV280 SV340	TR270 TR310		TR320 TR340 TV370 TV450	REQ'D EQUIPMENT					
	410		420 430		440	435 445 450	465		420CT 440CT	445CT 450CT		STD FLOW	HIGH FLOW	CASE DRAIN	FRONT ELEC	DEMO DOOR	2ND AUX
625 TRENCHER – STD FLOW (14-22 gpm)	•	•	•	•	•	•	•	•	•	•	•	R					O
MODEL 640 TRENCHER – HIGH FLOW (25-28 gpm)		•											R	R			O
MODEL 640 TRENCHER – HIGH FLOW (29-35 gpm)		•	•	•	•	•	•		•	•			R	R			O
MODEL 640 TRENCHER – HIGH FLOW (36-44 gpm)								•			•		R	R			O

OPTIONAL COMPONENTS (Order as needed).

	PART NUMBER	WEIGHT LB
Hydraulic Side shift package - Requires 2nd aux. kit	86620056	52

BOOM AND CRUMBER OPTIONS (Must order one for complete unit. Not required for prepackaged units).

	PART NUMBER	WEIGHT LB
30" Boom and crumber assembly	86620052	104
36" Boom and crumber assembly	86620053	115
42" Boom and crumber assembly	86620054	128
48" Boom and crumber assembly	86620055	140
60" Boom and crumber assembly (for model 640 only)	87554975	180

Trenchers (continued next page)

Trencher

SKID STEER LOADERS/COMPACT TRACK LOADERS

FEATURES

- Side shift: Manual standard; Hydraulic optional
- 2" pitch, 50,000 lb, anti-back flex chain for maximum performance and life
- High torque hydraulic motor for maximum digging power
- Heavy duty chain (625) or planetary (640) reduction amplifies torque to cutting chain
- Sealed idler bearing is maintenance free (625)
- Low profile dirt shield for improved operator visibility
- Built-in skid shoe to provide positive depth control for auger
- Pivoting crumber shoe and bar to assist with loose soil removal from trench
- Bolt-on replaceable wear strips on boom extend boom life under rough conditions
- Drum scrapers included

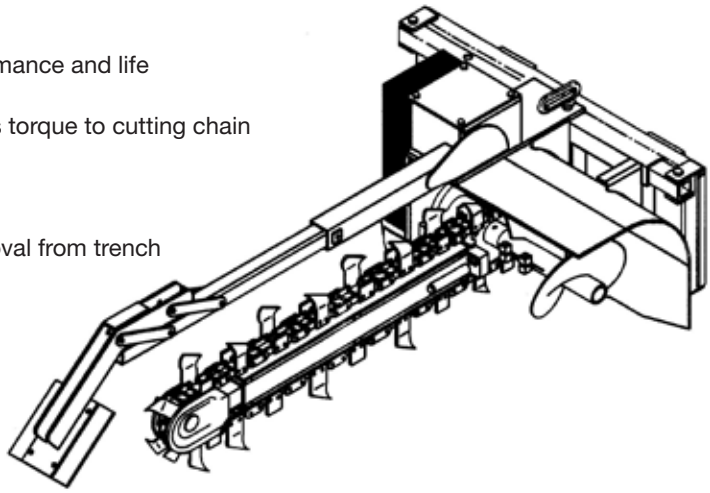

REQUIREMENTS FOR OPERATION

- Standard Auxiliary hydraulics (as indicated)
- High Flow Auxiliary hydraulics (as indicated)

SPECIFICATIONS					
DESCRIPTION	**30 in.**	**36 in.**	**42 in.**	**48 in.**	**60 in.**
Trench Depth with Auger @ 65° Digging Angle.	30"	36"	42"	48"	60"
Trench Widths Available:	6, 8, 10, 12"	6, 8, 10, 12"	6, 8, 10"	6, 8"	6"
Recommended Trenching Angle	65°	65°	65°	65°	65°
Head shaft Height	8"	8"	8"	8"	8"
Overall Trencher Length	66"	73"	80"	86"	86"
Overall Trencher Width	48"	48"	48"	48"	48"
Overall Trencher Height	32"	32"	32"	32"	32"
Spoil Discharge Reach	18"	18"	18"	18"	18"
Side Shift, Right of Corner	17"	17"	17"	17"	17"
Distance from Centerline Drive Sprocket to Back of Mounting Frame	16"	16"	16"	16"	16"

CHAIN SELECTION

TOOTH EVERY STATION (TES):
Designed for standard digging conditions in light to moderately compacted, sandy, loam soils and loosely packed gravelly soils. Typically good digging conditions.

TOOTH EVERY OTHER STATION(TEOS):
Designed to be the most productive in wet, sticky conditions such as wet clay, gumbo, etc. TEOS allows sticky soils to be discharged as it comes around the headshaft sprocket allowing the auger to pick it up and discharge spoil to the side of the trench.

ROCK AND FROST CHAIN 50/50 (50% R&F teeth/50% cup teeth):
Gives highest production in frozen ground, highly compacted or rocky soils. Bullet shaped rock teeth break tougher soils and rock allowing the cup teeth to pick it up and clean the trench. Aggressive in tough conditions but not as productive in lighter normal conditions.

SHARK TOOTH CHAIN 70/30 (70% Shark teeth/30% cup teeth):
The 70/30 chain should be used in compacted soils, light frozen ground, baked hard clay, shale or rocky soils. Shark teeth will slice, break and relieve the tough soils allowing cup teeth to follow and clean the trench. Not as productive as TES chain in normal digging conditions.

FULL SHARK TOOTH CHAIN (100% SHARK teeth):
Full shark tooth chain is recommended for fracturable rock, shale, caliche or conditions with little or no loose soil. Will not efficiently clean the trench in sand, silt, and high moisture clay conditions.

Vibratory Roller (Padfoot Drum)

SKID STEER LOADERS/COMPACT TRACK LOADERS

Unit includes mounting plate, hoses and quick couplers.

REQUIRES STANDARD AUXILIARY BOOM HYDRAULICS	PART NUMBER	WEIGHT LB
VRP48 48" VIBRATORY ROLLER	87373395	1630
VRP66 66" VIBRATORY ROLLER	87373396	2085
VRP73 73" VIBRATORY ROLLER	87373397	2230
VRP84 84" VIBRATORY ROLLER	87373398	2455

MODEL COMPATIBILITY	SR130 SR150 SR160		SR175 SV185	SR200 SR210	SR220 SR240		SV250 SR250 SR270 SV280	SV300 SV340		TR270	TR310		TR320 TR340 TV370 TV450	REQ'D EQUIPMENT					
	410	420		430	440	435	445 450	465	420CT		440CT	445CT 450CT		STD FLOW	HIGH FLOW	CASE DRAIN	FRONT ELEC	DEMO DOOR	2ND AUX
48" VIBRATORY ROLLER	•	•	•	•	•	•	•	•	•	•	•	•	•	R					
66" VIBRATORY ROLLER			•	•	•	•	•	•		•	•	•	•	R					
73" VIBRATORY ROLLER					•	•	•	•		•	•	•	•	R					
84" VIBRATORY ROLLER							•	•				•	•	R					

SPECIFICATIONS				
DESCRIPTION	VRP48	VRP66	VRP73	VRP84
Drum Width - in. (mm	48 (1219)	66 (1676)	73 (1854)	84 (2134)
Drum Diameter - in. (mm)	22 (559)	22 (559)	22 (559)	22 (559)
Dynamic Force - lb. (kn)	5750 (25.6)	7800 (34.7)	8550 (38.0)	9370 (41.7)
Frequency @ 20 gpm - vpm	2600	2600	2600	2600
Vibrating Wt. - lb. (kg	890 (404)	1130 (513)	1225 (556)	1370 (621)
Operating Wt. - lb. (kg)	1630 (739)	2085 (946)	2230 (1012)	2455 (1114)
Drum Oscillation	±15°	±15°	±15°	±15°
Max. Hyd. Flow - gpm (lpm)	25 (95)	25 (95)	25 (95)	25 (95)

FEATURES

- Compact sand, gravel or soil in preparation for concrete or asphalt surfacing
- ± 15° Drum oscillation
- Includes quick disconnects
- Can be center mounted or offset 12" to right
- Drum scrapers included

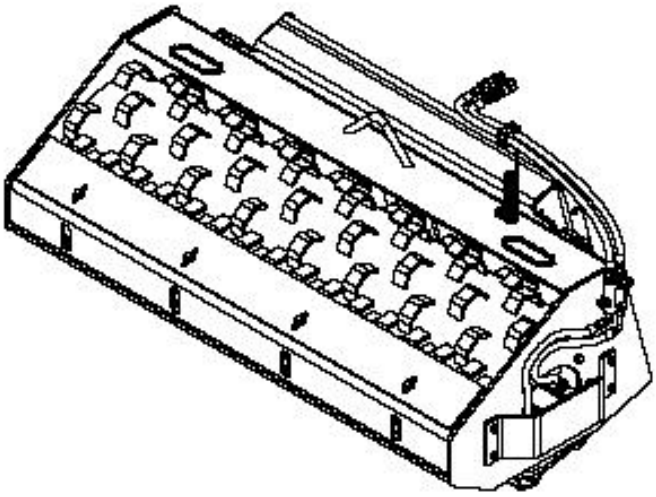

Vibratory Roller (Smooth Drum)

SKID STEER LOADERS/COMPACT TRACK LOADERS

Unit includes mounting plate, hoses and quick couplers.

REQUIRES STANDARD AUXILIARY BOOM HYDRAULICS	PART NUMBER	WEIGHT LB
VRS48 48" VIBRATORY ROLLER	87373001	1680
VRS66 66" VIBRATORY ROLLER	87373002	2150
VRS73 73" VIBRATORY ROLLER	87373003	2300
VRS84 84" VIBRATORY ROLLER	87373004	2530

MODEL COMPATIBILITY	SR130 SR150 SR160		SR175 SV185	SR200 SR210	SR220 SR240		SV250 SR250 SR270 SV280	SV300 SV340		TR270	TR310		TR320 TR340 TV370 TV450	REQ'D EQUIPMENT					
	410	420		430	440	435	445 450	465	420CT		440CT	445CT 450CT		STD FLOW	HIGH FLOW	CASE DRAIN	FRONT ELEC	DEMO DOOR	2ND AUX
48" VIBRATORY ROLLER	•	•	•	•	•	•	•	•	•	•	•	•	•	R					
66" VIBRATORY ROLLER			•	•	•	•	•	•		•	•	•	•	R					
73" VIBRATORY ROLLER					•	•	•	•		•	•	•	•	R					
84" VIBRATORY ROLLER							•	•				•	•	R					

SPECIFICATIONS				
DESCRIPTION	VRP48	VRP66	VRP73	VRP84
Drum Width - in. (mm	48 (1219)	66 (1676)	73 (1854)	84 (2134)
Drum Diameter - in. (mm)	24 (610)	24 (610)	24 (610)	24 (610)
Dynamic Force - lb. (kn)	5750 (25.6)	7800 (34.7)	8550 (38.0)	9370 (41.7)
Frequency @ 20 gpm - vpm	2600	2600	2600	2600
Vibrating Wt. - lb. (kg	935 (424)	1190 (540)	1290 (585)	1440 (653)
Operating Wt. - lb. (kg)	1680 (762)	2150 (975)	2300 (1043)	2550 (1157)
Drum Oscillation	±15°	±15°	±15°	±15°
Max. Hyd. Flow - gpm (lpm)	25 (95)	25 (95)	25 (95)	25 (95)

FEATURES

- Compact sand, gravel or soil in preparation for concrete or asphalt surfacing
- ± 15° Drum oscillation
- Includes quick disconnects
- Can be center mounted or offset 12" to right
- Drum scrapers included

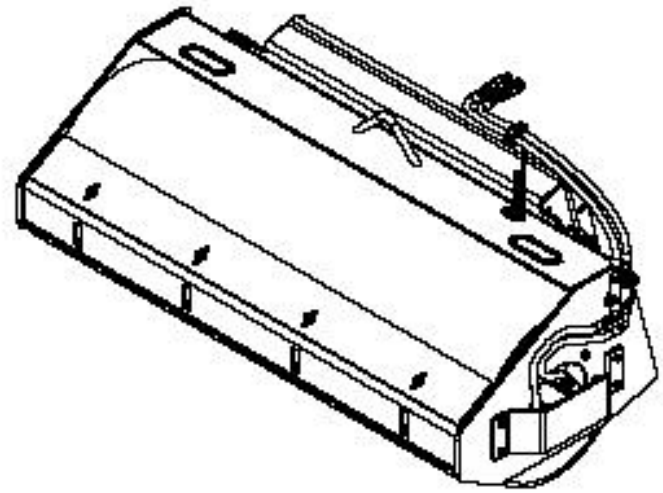

Water Kit

SKID STEER LOADERS/COMPACT TRACK LOADERS

Water kit may be used with pick-up sweepers, angle brooms, cold planers, rock wheels, vibratory rollers and other attachments where dust control is important.

REQUIRES TUBING AND NOZZLE KIT FOR INDIVIDUAL ATTACHMENTS	PART NUMBER	WEIGHT LB
Water Kit, Roof Mount for XT, 400 Series	87338935	329
Water Kit, Roof Mount for Alpha Series	84399981	329

OPTIONS (Order as Needed)

Water nozzle kit for brooms, other attachments - includes 4 nozzles, tubing, mounting brackets, hose and quick disconnect coupling	86619372	15
Water nozzle kit , includes 3 spray nozzles, tubing and fitting to reach coupler on loader boom for SP12 - HP30 cold planers	87045462	10

MODEL COMPATIBILITY	410 420	430 440	435 445	450 465	440	420CT 440CT	445CT 450CT	SR130 SR150 SR160	SR175 SV185	SR200 SR210 SR220 SR240	SV250 SR250	SV300 SV340	TR270 TR310	TR320 TR340 TV370 TV450	REQ'D EQUIP STD FLOW	REQ'D EQUIP FRONT ELEC
Water Kit, Roof Mount for XT, 400 Series - 87338935	•	•	•	•	•	•	•									O
Water Kit, Roof Mount for Alpha Series - 84399981								•	•	•	•	•	•	•		O

FEATURES

- 30 gal capacity
- Roof-mounted, low profile tank
- Includes mounting brackets, pump, tubing to end of loader boom, wiring harness, control box

APPLICATIONS

- Pick-up brooms, angle brooms, cold planers, rock saws, vibratory rollers and other attachments requiring dust control

REQUIREMENTS FOR OPERATION

- Nozzle kit for specific applications

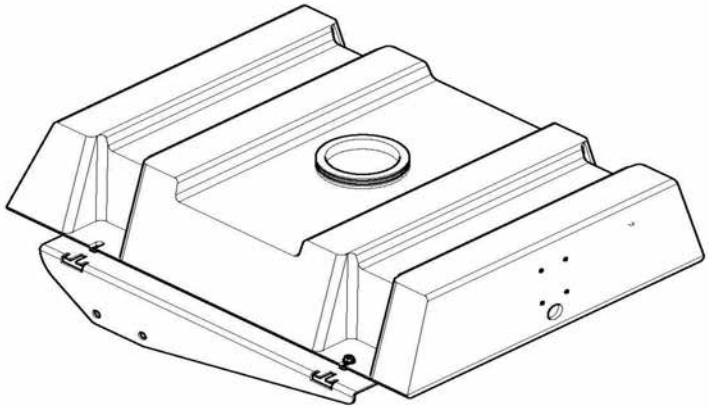

PAGE #	PART NUMBER	PART DESCRIPTION	LIST PRICE
SS-2	84397477	ADAPTER- SSL ATTACHMENT- BLANK	$ 240.00
SS-2	84397478	HEAVY DUTY ADAPTER- SSL ATTACH	$ 310.00
SS-3	87042591	AUGER DRIVE- GEAR- X1475R256	$ 2,770.00
SS-3	87042592	AUGER DRIVE- GEAR- X1475H200	$ 2,770.00
SS-3	87042593	AUGER DRIVE- GEAR- X1975R256	$ 2,950.00
SS-3	87042594	AUGER DRIVE- GEAR- X1975H200	$ 2,950.00
SS-3	47898620	AUGER DRIVE- X2475H200- CASE	$ 3,190.00
SS-3	87488593	AUGER DRIVE- X5075H200	$ 5,520.00
SS-4	9863606	AUGER 6"X4' 256 RD- HDF	$ 270.00
SS-4	9863607	AUGER 9"X4' 256 RD- HDF	$ 390.00
SS-4	9863608	AUGER 12"X4' 256 RD- HDF	$ 460.00
SS-4	9863609	AUGER 15"X4' 256 RD- HDF	$ 590.00
SS-4	9863610	AUGER 18"X4' 256 RD- HDF	$ 750.00
SS-4	9863611	AUGER 24"X4' 256 RD- HDF	$ 910.00
SS-4	9863612	AUGER 30"X4' 256 RD- HDF	$ 1,210.00
SS-4	9863613	AUGER 36"X4' 256 RD- HDF	$ 1,380.00
SS-4	9863626	AUGER 6"X4' 200 HEX- HDF	$ 270.00
SS-4	9863627	AUGER 9"X4' 200 HEX- HDF	$ 390.00
SS-4	9863628	AUGER 12"X4' 200 HEX- HDF	$ 460.00
SS-4	9863629	AUGER 15"X4' 200 HEX- HDF	$ 590.00
SS-4	9863630	AUGER 18"X4' 200 HEX- HDF	$ 750.00
SS-4	9863631	AUGER 24"X4' 200 HEX- HDF	$ 910.00
SS-4	9863632	AUGER 30"X4' 200 HEX- HDF	$ 1,210.00
SS-4	9863633	AUGER 36"X4' 200 HEX- HDF	$ 1,380.00
SS-4	9863614	AUGER 6"X4' 256 RD- HDC	$ 400.00
SS-4	9863615	AUGER 9"X4' 256 RD- HDC	$ 600.00
SS-4	9863616	AUGER 12"X4' 256 RD- HDC	$ 640.00
SS-4	9863617	AUGER 15"X4' 256 RD- HDC	$ 810.00
SS-4	9863618	AUGER 18"X4' 256 RD- HDC	$ 940.00
SS-4	9863619	AUGER 24"X4' 256 RD- HDC	$ 1,380.00
SS-4	9863620	AUGER 30"X4' 256 RD- HDC	$ 1,700.00
SS-4	9863621	AUGER 36"X4' 256 RD- HDC	$ 1,840.00
SS-4	9863634	AUGER 6"X4' 200 HEX- HDC	$ 400.00
SS-4	9863635	AUGER 9"X4' 200 HEX- HDC	$ 600.00
SS-4	9863636	AUGER 12"X4' 200 HEX- HDC	$ 640.00
SS-4	9863637	AUGER 15"X4' 200 HEX- HDC	$ 810.00
SS-4	9863638	AUGER 18"X4' 200 HEX- HDC	$ 940.00
SS-4	9863639	AUGER 24"X4' 200 HEX- HDC	$ 1,380.00
SS-4	9863640	AUGER 30"X4' 200 HEX- HDC	$ 1,700.00
SS-4	9863641	AUGER 36"X4' 200 HEX- HDC	$ 1,840.00
SS-5	9863622	AUGER 18"X4' 256 RD- HTF	$ 650.00

PAGE #	PART NUMBER	PART DESCRIPTION	LIST PRICE
SS-5	9863623	AUGER 24"X4' 256 RD- HTF	$ 680.00
SS-5	9863624	AUGER 30"X4' 256 RD- HTF	$ 980.00
SS-5	9863625	AUGER 36"X4' 256 RD- HTF	$ 1,220.00
SS-5	9863642	AUGER 18"X4' 200 HEX- HTF	$ 650.00
SS-5	9863643	AUGER 24"X4' 200 HEX- HTF	$ 680.00
SS-5	9863644	AUGER 30"X4' 200 HEX- HTF	$ 980.00
SS-5	9863645	AUGER 36"X4' 200 HEX- HTF	$ 1,220.00
SS-5	47904378	BIT- AUGER- 6IN SRR ROCK H200	$ 1,050.00
SS-5	47904381	BIT- AUGER- 9IN SRR ROCK H200	$ 1,050.00
SS-5	47904382	BIT- AUGER- 12IN SRR ROCK H200	$ 1,170.00
SS-5	47904383	BIT- AUGER- 16IN SRR ROCK H200	$ 1,890.00
SS-5	47904384	BIT- AUGER- 18IN SRR ROCK H200	$ 2,170.00
SS-5	47904385	BIT- AUGER- 20IN SRR ROCK H200	$ 2,370.00
SS-5	47904386	BIT- AUGER- 24IN SRR ROCK H200	$ 2,670.00
SS-5	47904387	BIT- AUGER- 30IN SRR ROCK H200	$ 2,880.00
SS-5	47904388	BIT- AUGER- 36IN SRR ROCK H200	$ 3,570.00
SS-5	9863646	ADAPTER- 2 HEX F TO 256 RD M	$ 230.00
SS-5	9863647	ADAPTER- 256 RD F TO 2 HEX M	$ 150.00
SS-5	87042596	ADAPTER- 2 HEX F TO 2 RD M	$ 240.00
SS-5	87042597	ADAPTER- 256 RD F TO 2 RD M	$ 140.00
SS-5	87042598	AUGER EXTENSION- 12X256 RD	$ 150.00
SS-5	87042600	AUGER EXTENSION- 24X256 RD	$ 200.00
SS-5	87042601	AUGER EXTENSION- 12X2 HEX	$ 190.00
SS-5	87042602	AUGER EXTENSION- 24X2 HEX	$ 220.00
SS-5	84514060	EXTENSION- AUGER H200 X 48"	$ 270.00
SS-6	279530A1	AUTO RAKE- 66"	$ 11,330.00
SS-6	251357A1	76" AUTO-RAKE	$ 12,530.00
SS-7	87498441	BACKHOE- 485	$ 9,400.00
SS-7	47670832	BACKHOE 509B - CASE	$ 12,360.00
SS-7	47670834	BACKHOE 511B - CASE	$ 13,060.00
SS-7	47670835	BACKHOE 611B - CASE	$ 14,150.00
SS-7	87318192	MOUNTING KIT	$ 2,100.00
SS-7	87318193	MOUNTING KIT	$ 2,100.00
SS-7	84420962	BACKHOE MOUNTING KIT	$ 2,320.00
SS-7	84420963	BACKHOE MOUNTING KIT	$ 2,720.00
SS-7	84420965	BACKHOE MOUNTING KIT	$ 2,560.00
SS-8	84150223	RUBBER PADS- 485	$ 150.00
SS-8	47670838	FLAT PADS FOR 509B- 511B FD	$ 180.00
SS-8	86547400	BACKING CENTRE	$ 180.00
SS-8	86547423	PADS- RUBBER STREET	$ 650.00
SS-8	47670839	FLAT PADS FOR 611B? FOLD-DOWN	$ 230.00

PAGE #	PART NUMBER	PART DESCRIPTION	LIST PRICE
SS-8	47670841	STNDRD DRT PDS FOR 611B FD	$ 200.00
SS-8	47670842	RBR ST PADS FOR 611B FOLD-DOWN	$ 480.00
SS-8	86547424	PADS- FLIP OVER	$ 830.00
SS-8	87034086	STABILIZERS- VERTICAL	$ 950.00
SS-8	47670844	VERT STAB FOR 611B (FAC INS)	$ 1,000.00
SS-8	86590026	PADS- STANDARD DIRT	$ 230.00
SS-8	86590027	PADS- RUBBER STREET	$ 470.00
SS-8	86590028	PAD SET- FLAT	$ 260.00
SS-8	84150409	BUCKET QC- C&P	$ 1,260.00
SS-8	87487657	THUMB ATCHMT FACT. INSTALLED	$ 860.00
SS-8	87034089	THUMB- KNUCKLE ARM	$ 1,460.00
SS-8	87034090	THUMB- HYDRAULIC	$ 1,810.00
SS-8	47687596	HMR HYD KIT FOR 509B- 511B	$ 3,830.00
SS-8	47687597	HMR HYD KIT FOR 611B (FAC INS)	$ 1,300.00
SS-8	47670854	2WAY AUXHYD KIT FOR 509B- 511B	$ 1,740.00
SS-8	47670855	2WAY AUX HYD KIT FOR 611B FAC	$ 1,790.00
SS-8	86547428	BUCKET- POWER DIG- 10"	$ 540.00
SS-8	86547429	BUCKET- POWER DIG- 12"	$ 590.00
SS-8	86547430	BUCKET- POWER DIG- 16"	$ 630.00
SS-8	86547431	BUCKET- POWER DIG- 18"	$ 660.00
SS-8	86547432	BUCKET- POWER DIG- 24"	$ 680.00
SS-9	84150228	BUCKET- 12"	$ 920.00
SS-9	84150229	BUCKET- 16"	$ 1,000.00
SS-9	84150230	BUCKET- 18"	$ 1,030.00
SS-9	47670859	BUCKET- 20IN- 509B- 511B- 611B	$ 1,040.00
SS-9	84150231	BUCKET- 24"	$ 1,080.00
SS-9	84150232	BUCKET- 34"	$ 1,320.00
SS-9	84150233	BUCKET- 36"	$ 1,350.00
SS-9	84150234	BUCKET- 38"	$ 1,440.00
SS-9	87648164	BRACKET- AUGER ADAPTER	$ 440.00
SS-9	47670861	HAMMER ADAPTER BRACKET	$ 540.00
SS-9	87034110	BUCKET- HEAVY DUTY- 12"- C&P	$ 1,090.00
SS-9	87034112	BUCKET- HEAVY DUTY- 18"- C&P	$ 700.00
SS-9	87034115	BUCKET- HEAVY DUTY- 24"- C&P	$ 820.00
SS-9	87034116	BUCKET- HEAVY DUTY- 20"- C&P	$ 900.00
SS-9	87034117	BUCKET- HEAVY DUTY- 36"- C&P	$ 1,030.00
SS-9	87034118	BUCKET- DITCH CLEANING- 30"	$ 1,030.00
SS-9	87034119	BUCKET- DITCH CLEANING- 36"	$ 1,140.00
SS-9	87034120	RIPPER TOOTH- C&P 027	$ 660.00
SS-9	87034122	AUGER ADAPTER- C&P 027	$ 760.00
SS-9	47687598	HAMMER ADAPTER BRACKET C&P 027	$ 870.00

PAGE #	PART NUMBER	PART DESCRIPTION	LIST PRICE
SS-9	84466100	BACKHOE MOUNTING BRACKET	$ 440.00
SS-9	84420966	BACKHOE MOUNTING BRACKET	$ 420.00
SS-9	84420967	BACKHOE MOUNTING BRACKET	$ 450.00
SS-9	47670869	STABILIZER CYLINDER GUARD KIT	$ 220.00
SS-9	84150410	BUCKET QC- C&P- 6100- 6120	$ 1,320.00
SS-9	87487658	THUMB ATCHMT FIELD INSTALLED	$ 650.00
SS-9	87034125	KNUCKLE ARM THUMB- RIGID	$ 1,310.00
SS-9	87034127	THUMB- HYDRAULIC	$ 1,660.00
SS-9	47670874	HMR HYD KIT FOR 509B- 511B	$ 3,570.00
SS-9	47670875	HMR HYD KIT FOR 611B (FLD INS)	$ 3,570.00
SS-10	47670876	2WAY AUX HYD KIT- 509B- 511B	$ 1,660.00
SS-10	47670877	2WAY AUX HYD KIT FOR 611B FLD	$ 1,700.00
SS-10	87034129	VERTICAL STABILIZER PKG- FIELD	$ 2,080.00
SS-10	47670853	VERT STAB FOR 611B (FLD INS)	$ 2,200.00
SS-12	87381816	BALE HANDLER	$ 3,170.00
SS-13	87648168	BALE SPEAR- STD SINGLE	$ 650.00
SS-13	87473627	BALE SPEAR- HD SINGLE 96"	$ 960.00
SS-13	87473628	BALE SPEAR- HD DUAL	$ 960.00
SS-13	87473629	BALE SPEAR- 3 X 27"	$ 920.00
SS-13	87473630	BALE SPEAR- 3 X 44"	$ 1,110.00
SS-14	48159719	ATT BRM ANGLE HYD- 72IN CASE	$ 8,190.00
SS-14	48159720	ATT BRM ANGLE HYD- 84IN CASE	$ 8,410.00
SS-14	84215694	BROOM- ANGLE 72" CASE SSL	$ 6,610.00
SS-14	84215695	BROOM- ANGLE 84" CASE SSL	$ 6,830.00
SS-14	84215696	BROOM- ANGLE 96" CASE SSL	$ 7,050.00
SS-14	47358395	BROOM-DUAL MOTOR-96IN CASE SSL	$ 7,910.00
SS-14	84215697	KIT- HYD ANGLE SSL UNIVERSAL	$ 1,420.00
SS-14	84215698	KIT- HYD ANGLE SSL 14 PIN	$ 1,600.00
SS-14	84215699	KIT- HYD ANGLE SSL 2ND AUX	$ 550.00
SS-14	87383458	WIRE HARNESS ADAPTER	$ 140.00
SS-14	48184477	KIT- SPRING CHAIN- HD	$ 123.00
SS-14	84376838	SET- POLY/WIRE BRUSHES 96IN	$ 410.00
SS-14	84376839	POLY/WIRE BRUSH 84 IN	$ 480.00
SS-14	84376840	POLY/WIRE BRUSH 96 IN	$ 540.00
SS-14	51416970	ALL PLY BRSH SET 72 BROOM	$ 408.00
SS-14	51416971	ALL PLY BRSH SET 84 BROOM	$ 417.00
SS-14	51416972	ALL PLY BRSH SET 96 BROOM	$ 462.00
SS-15	51469714	BRM PICKUP 215 HOPPR 60IN-CASE	$ 5,008.00
SS-15	51469715	BRM PICKUP 215 HOPPR 72IN-CASE	$ 5,444.00
SS-15	51469717	BRM PICKUP 215 HOPPR 84IN-CASE	$ 5,881.00
SS-15	84188890	SINGLE GUTTER BRUSH KIT- SB	$ 1,620.00

PAGE #	PART NUMBER	PART DESCRIPTION	LIST PRICE
SS-15	48119587	DUAL GUTTER BRUSH KIT ALL POLY	$ 2,977.00
SS-15	84124630	SINGLE GUTTER BRUSH KIT- VRS	$ 1,620.00
SS-15	84124631	DUAL GUTTER BRUSH KIT- VRS	$ 3,130.00
SS-15	445999A1	WATER KIT W/ TANK	$ 1,630.00
SS-15	84375436	SET- POLY/WIRE BRUSHES 60IN	$ 450.00
SS-15	84375437	SET- POLY/WIRE BRUSHES 72IN	$ 530.00
SS-15	84375438	SET- POLY/WIRE BRUSHES 84IN	$ 630.00
SS-16	87553107	BROOM- PICK-UP- 60"	$ 6,940.00
SS-16	87553108	BROOM- PICK-UP- 72"	$ 7,640.00
SS-16	87553109	BROOM- PICK-UP- 84"	$ 8,880.00
SS-16	51422416	60 VS VC PK-UP BRM W PLY WR BR	$ 11,130.00
SS-16	51422417	72 VS VC PK-UP BRM W PLY WR BR	$ 12,140.00
SS-16	51422418	84 VS VC PK-UP BRM W PLY WR BR	$ 11,988.00
SS-16	48114556	WR HARN CONN- UNITS W 14-PIN	$ 295.00
SS-16	48114557	UNVELC CTRL KIT-UNTS W/O 14-PN	$ 270.00
SS-16	84188890	SINGLE GUTTER BRUSH KIT- SB	$ 1,620.00
SS-16	48119587	DUAL GUTTER BRUSH KIT ALL POLY	$ 2,977.00
SS-16	84124630	SINGLE GUTTER BRUSH KIT- VRS	$ 1,620.00
SS-16	84124631	DUAL GUTTER BRUSH KIT- VRS	$ 3,130.00
SS-16	445999A1	WATER KIT W/ TANK	$ 1,630.00
SS-16	84375436	SET- POLY/WIRE BRUSHES 60IN	$ 450.00
SS-16	84375437	SET- POLY/WIRE BRUSHES 72IN	$ 530.00
SS-16	84375438	SET- POLY/WIRE BRUSHES 84IN	$ 630.00
SS-17	87648133	BUCKET- 4X1- UTILITY- 66"	$ 3,920.00
SS-17	87648134	BUCKET- 4X1- UTILITY- 72"	$ 4,190.00
SS-17	87648135	SPILL GUARD- 4X1- 66"	$ 160.00
SS-17	87648136	SPILL GUARD- 4X1- 72"	$ 160.00
SS-18	87648161	BUCKET- 4X1- CONSTRUCTION 72"	$ 4,780.00
SS-18	87648162	BUCKET- 4X1- CONSTRUCTION 78"	$ 4,920.00
SS-18	87648163	BUCKET- 4X1- CONSTRUCTION 84"	$ 5,080.00
SS-18	87648136	SPILL GUARD- 4X1- 72"	$ 160.00
SS-18	87648165	SPILL GUARD- 4X1- 78"	$ 190.00
SS-18	87648166	SPILL GUARD- 4X1- 84"	$ 200.00
SS-19	84195960	BKT- S DISCH SAND 60" CASE	$ 6,180.00
SS-19	84195961	BKT- S DISCH SAND 72" CASE	$ 8,260.00
SS-19	84195962	BKT- S DISCH SAWDUST 72" CASE	$ 8,720.00
SS-19	84195963	BKT- S DISCH SAWDUST 84" CASE	$ 10,960.00
SS-20	87330077	CHIPPER- 74500 STD FLOW	$ 9,814.00
SS-20	87330078	CHIPPER- 74800 HIGH FLOW	$ 13,249.00
SS-21	84539377	PLANER HP16 - 16" (22-28 GPM)	$ 20,350.00
SS-21	84539378	PLANER HP18 - 18" (22-28GPM)	$ 21,090.00

PAGE #	PART NUMBER	PART DESCRIPTION	LIST PRICE
SS-21	84539379	PLANER HP16 - 16" (31-35 GPM)	$ 20,410.00
SS-21	84539380	PLANER HP18 - 18" (31-35 GPM)	$ 20,780.00
SS-21	84539381	PLANER HP24 - 24" (31-35 GPM)	$ 24,460.00
SS-21	84539382	PLANER HP30 - 30" (31-35 GPM)	$ 25,010.00
SS-21	84539383	PLANER HP40 - 40" (31-35 GPM)	$ 31,480.00
SS-21	84523776	EHF PLANER HP24-24"(31-35 GPM)	$ 25,740.00
SS-21	84523778	EHFPLANER HP30-30" (31-35 GPM)	$ 26,740.00
SS-21	84523780	EHF PLANER HP40-40"(31-35 GPM)	$ 32,810.00
SS-21	87045459	DRUM- 2.5"	$ 1,940.00
SS-21	87045460	DRUM- 4"	$ 1,970.00
SS-21	87045461	DRUM- 6"	$ 2,340.00
SS-21	47403651	KIT ELECT CONTROL UNIVERSAL	$ 1,100.00
SS-21	87048529	WIRE HARNESS ADAPTER	$ 180.00
SS-21	87045462	WATER NOZZLE KIT	$ 300.00
SS-21	87326406	WATER NOZZLE KIT	$ 380.00
SS-23	87048530	COLD PLANER- SP12M	$ 10,910.00
SS-23	87048531	COLD PLANER- SP12H	$ 13,430.00
SS-23	87045458	DRUM- 2.5" FOR SP12	$ 1,460.00
SS-23	87045462	WATER NOZZLE KIT	$ 300.00
SS-23	87048529	WIRE HARNESS ADAPTER	$ 180.00
SS-25	48035234	COLD PLANNER- 16IN SF - CASE	$ 11,920.00
SS-25	48035235	COLD PLANNER- 16IN SF - CASE	$ 12,670.00
SS-25	48035236	COLD PLANNER- 16IN HF - CASE	$ 19,480.00
SS-25	48035237	COLD PLANNER- 18IN HF - CASE	$ 20,410.00
SS-25	48035238	COLD PLANNER- 24IN HF - CASE	$ 22,670.00
SS-25	48035239	COLD PLANNER- 30IN HF - CASE	$ 26,720.00
SS-25	48035240	COLD PLANNER- 36IN HF - CASE	$ 31,050.00
SS-25	87023319	WIRE HARNESS ADAPTER	$ 190.00
SS-25	48038648	UNIVERSAL- COLD PLANNER	$ 350.00
SS-25	48035330	WATER- KIT	$ 440.00
SS-27	87398932	BUCKET- CONCRETE- 0.5 YD	$ 2,750.00
SS-27	87398933	BUCKET- CONCRETE- 0.75 YD	$ 2,980.00
SS-27	48022262	CHUTE 90DEG- CONCRETE BKT	$ 448.00
SS-28	87045489	CONCRETE CLAW	$ 2,590.00
SS-29	87387403	DOZER BLADE- PL1300- 72"	$ 5,530.00
SS-29	87387404	DOZER BLADE- PL1300- 84"	$ 5,620.00
SS-29	87387405	DOZER BLADE- PL1300- 96"	$ 5,715.00
SS-29	87015256	UNIVERSAL WIRING KIT	$ 78.00
SS-29	86602638	WIRING ADAPTER KIT	$ 103.00
SS-29	87048529	WIRE HARNESS ADAPTER	$ 180.00
SS-30	48175187	72IN LASER BOX GRADER- SINGLE	$ 12,495.00

PAGE #	PART NUMBER	PART DESCRIPTION	LIST PRICE
SS-30	48175188	84IN LASER BOX GRADER- SINGLE	$ 12,675.00
SS-30	48175189	96IN LASER BOX GRADER- SINGLE	$ 12,880.00
SS-30	48175190	72IN LASER BOX GRADER- DUAL	$ 18,075.00
SS-30	48175191	84IN LASER BOX GRADER- DUAL	$ 18,450.00
SS-30	48175192	96IN LASER BOX GRADER- DUAL	$ 18,850.00
SS-30	48175206	KIT- SINGLE MAST- HARNESS	$ 740.00
SS-30	48175207	KIT- DUAL MAST- HARNESS	$ 740.00
SS-32	87678207	GRAPPLE- BRUSH- CONSTR.- 72"	$ 4,740.00
SS-32	87678208	GRAPPLE- BRUSH- CONSTR.- 78"	$ 5,020.00
SS-32	87678209	GRAPPLE- BRUSH- CONSTR.- 84"	$ 5,290.00
SS-32	87678210	GRAPPLE- BRUSH- CONSTR.- 90"	$ 5,330.00
SS-32	51422159	72" CNST BRSH GRAPPLE LT-CASE	$ 4,150.00
SS-32	51422160	78" CNST BRSH GRAPPLE LT-CASE	$ 4,300.00
SS-32	51422161	84" CNST BRSH GRAPPLE LT-CASE	$ 4,550.00
SS-32	51453848	KIT- CYLINDER GUARD	$ 116.00
SS-34	47443896	BRUSHGRAPPLE 66IN UTILITY-CASE	$ 4,420.00
SS-34	47443897	BRUSHGRAPPLE 72IN UTILITY-CASE	$ 4,600.00
SS-34	51422158	72" UTLY BRSH GRAPPL LT-CASE	$ 3,250.00
SS-34	51453848	KIT- CYLINDER GUARD	$ 116.00
SS-36	51498695	72" LARGE CAP GRAPPLE-CASE	$ 4,600.00
SS-36	51498696	84" LARGE CAP GRAPPLE-CASE	$ 4,800.00
SS-36	51498699	72" LARGE CAP BUCKET GRP-CIH	$ 4,900.00
SS-36	51498700	84" LARGE CAP BUCKET GRP-CIH	$ 5,150.00
SS-37	51498737	72" LARGE CAP GRAPPLE-CIH	$ 5,900.00
SS-37	51498738	84" LARGE CAP GRAPPLE-CIH	$ 6,200.00
SS-38	87382066	ATTACHMENT- LOG GRAPPLE - CASE	$ 5,160.00
SS-39	87677288	GRAPPLE- SCRAP CONSTR. 76"	$ 4,960.00
SS-39	87677289	GRAPPLE- SCRAP CONSTR. 82"	$ 5,290.00
SS-39	87677290	GRAPPLE- SCRAP CONSTR. 88"	$ 5,530.00
SS-39	51422157	78" SCRAP GRAPPLE LT-CASE	$ 4,510.00
SS-39	51453848	KIT- CYLINDER GUARD	$ 116.00
SS-41	47443888	SCRAPGRAPPLE 60IN UTILITY-CASE	$ 4,490.00
SS-41	47443890	SCRAPGRAPPLE 66IN UTILITY-CASE	$ 4,500.00
SS-41	47443892	SCRAPGRAPPLE 72IN UTILITY-CASE	$ 4,830.00
SS-42	84160162	POWER BOX RAKE- M6 MANUAL	$ 10,310.00
SS-42	84160163	POWER BOX RAKE- M6 HYDR	$ 11,530.00
SS-42	84160164	POWER BOX RAKE- MX7 MANUAL	$ 10,880.00
SS-42	84160165	POWER BOX RAKE- MX7 HYDR	$ 12,190.00
SS-42	84160166	POWER BOX RAKE- MX8 MANUAL	$ 11,790.00
SS-42	84160167	POWER BOX RAKE- MX8 HYDR	$ 12,880.00
SS-42	84372934	ELECTRIC CONTROL KIT	$ 250.00

PAGE #	PART NUMBER	PART DESCRIPTION	LIST PRICE
SS-42	87023319	WIRE HARNESS ADAPTER	$ 190.00
SS-43	47450996	HYDRAULIC HAMMER	$ 7,425.00
SS-43	47450997	HYDRAULIC HAMMER	$ 7,615.00
SS-43	47450998	HYDRAULIC HAMMER	$ 9,300.00
SS-43	47450999	HYDRAULIC HAMMER	$ 9,490.00
SS-43	47451000	HYDRAULIC HAMMER	$ 10,300.00
SS-43	47451002	HYDRAULIC HAMMER	$ 10,490.00
SS-43	47451003	HYDRAULIC HAMMER	$ 14,500.00
SS-43	47766709	AUTO LUBE- 1M-6M HAMMER	$ 1,525.00
SS-43	47451007	WORKING STEEL	$ 195.00
SS-43	47451008	TOOL- CHISEL POINT-2M	$ 195.00
SS-43	47451009	TOOL- BLUNT POINT-2M	$ 195.00
SS-43	47451010	TOOL- FROST WEDGE-2M	$ 900.00
SS-43	47451011	TOOL- ASPHALT CUTTER-2M	$ 950.00
SS-43	47451012	TOOL- TAMPING PAD-2M	$ 1,245.00
SS-43	47451018	WORKING STEEL	$ 325.00
SS-43	47451019	WORKING STEEL	$ 325.00
SS-43	47451021	TOOL- BLUNT POINT-3M	$ 325.00
SS-43	47451022	WORKING STEEL	$ 955.00
SS-43	47451023	TOOL- ASPHALT CUTTER-3M	$ 980.00
SS-43	47451024	TOOL- TAMPING PAD-3M	$ 1,759.00
SS-43	47451026	WORKING STEEL	$ 400.00
SS-43	47451027	WORKING STEEL	$ 400.00
SS-43	47451028	TOOL- BLUNT POINT-4M	$ 400.00
SS-43	47451029	TOOL- FROST WEDGE-4M	$ 1,000.00
SS-43	47451030	WORKING STEEL	$ 1,040.00
SS-43	47451031	WORKING STEEL	$ 1,759.00
SS-43	47451037	WORKING STEEL	$ 450.00
SS-43	47451039	WORKING STEEL	$ 450.00
SS-43	47451040	TOOL- BLUNT POINT 5M-6M	$ 450.00
SS-43	47451041	WORKING STEEL	$ 1,500.00
SS-43	47451042	WORKING STEEL	$ 1,995.00
SS-45	87381819	LIFT BOOM- 6'	$ 1,510.00
SS-46	84316807	WEIGHLOG 100 CASE SS	$ 2,652.00
SS-46	84316808	WEIGHLOG 200 CASE SS	$ 3,686.00
SS-46	84512810	WEIGHLOG 100 SCALE-SSL	$ 2,768.00
SS-46	84512811	WEIGHLOG 200 SCALE-SSL	$ 3,807.00
SS-46	84316810	PRINTER KIT WEIGHLOG 200	$ 1,069.00
SS-47	84218741	FARM FORK- 60" CASE	$ 1,800.00
SS-47	84218742	FARM FORK- 66" CASE	$ 1,930.00
SS-47	84218743	FARM FORK- 72" CASE	$ 2,020.00

PAGE #	PART NUMBER	PART DESCRIPTION	LIST PRICE
SS-47	84218744	FARM FORK- 84" CASE	$ 3,240.00
SS-47	84218745	GRAPPLE- FARM FORK- CASE	$ 2,010.00
SS-48	84225459	MANURE SCRAPER- 60" CASE	$ 1,460.00
SS-48	84225460	MANURE SCRAPER- 72" CASE	$ 1,550.00
SS-48	84225461	MANURE SCRAPER- 84" CASE	$ 1,330.00
SS-48	84225462	MANURE SCRAPER- 96" CASE	$ 1,670.00
SS-49	84523771	MULCHER EHF DBL CARBIDE TEETH	$ 37,380.00
SS-49	84554134	MULCHER EHF DBL CLAW TEETH CAS	$ 33,530.00
SS-49	51472131	MULCHER HEAD - EHF/HF - CASE	$ 31,331.00
SS-49	51472133	KIT- DEFLECTOR DOOR- EHF- HYD	$ 3,179.00
SS-49	51472134	KIT DFLCTR DOOR HF 14-PIN ELEC	$ 4,203.00
SS-49	84553733	SET- TEETH DOUBLE CARBIDE MM60	$ 6,170.00
SS-49	84553734	SET- TEETH DOUBLE CLAW MM60	$ 2,430.00
SS-51	48188360	PALLET FORK ASSY 42IN-2500LB	$ 1,090.00
SS-51	48188361	PALLET FORK ASSY 48IN-2500LB	$ 1,100.00
SS-51	48188362	PALLET FORK ASSY 42IN-4000LB	$ 1,140.00
SS-51	48188363	PALLET FORK ASSY 48IN-4000LB	$ 1,170.00
SS-51	48188365	PALLET FORK ASSY 42IN-5500LB	$ 1,195.00
SS-51	48188366	PALLET FORK ASSY 48IN-5500LB	$ 1,215.00
SS-51	48188358	PALLET FORK FRAME ONLY	$ 840.00
SS-51	48188367	SET PLT FORK TINES 42IN-2500LB	$ 270.00
SS-51	48188368	SET PLT FORK TINES 48IN-2500LB	$ 275.00
SS-51	84354440	42" STD TINE SET	$ 350.00
SS-51	84354441	48" STD TINE SET	$ 375.00
SS-51	84332183	42" TINE SET	$ 375.00
SS-51	84332184	48" TINE SET	$ 400.00
SS-52	84354438	PLT FRK ASSY STD 42" CASE	$ 1,025.00
SS-52	84354439	PLT FRK ASSY STD 48" CASE	$ 1,060.00
SS-52	84332180	PALLET FORK ASSY- 42? TINES CA	$ 1,080.00
SS-52	84332181	PALLET FORK ASSY- 48" TINES	$ 1,130.00
SS-52	84348693	FRAME- PALLET FORK	$ 632.00
SS-52	84354440	42" STD TINE SET	$ 350.00
SS-52	84354441	48" STD TINE SET	$ 375.00
SS-52	84332183	42" TINE SET	$ 375.00
SS-52	84332184	48" TINE SET	$ 400.00
SS-53	47909707	PALLET FORK ASSY-HYD POS- 42IN	$ 2,275.00
SS-53	47909708	PALLET FORK ASSY-HYD POS- 48IN	$ 2,320.00
SS-53	48124313	HYD POS FORK W/NURSERY SLEEVES	$ 4,245.00
SS-53	47909711	PLLT FRK ASSY-HYD POS-W/O TNES	$ 2,015.00
SS-53	48124315	KIT- TINES AND NURSERY SLEEVES	$ 2,430.00
SS-54	84258061	POST DRIVER MODEL PD4800 CASE	$ 7,580.00

PAGE #	PART NUMBER	PART DESCRIPTION	LIST PRICE
SS-54	84258062	SQ COLLAR STRIKER PLATE 3.5"	$ 870.00
SS-54	84258063	SQ COLLAR STRIKER PLATE 6"	$ 840.00
SS-54	84258064	SQ COLLAR STRIKER PLATE 8"	$ 1,010.00
SS-54	84258065	COLLAR STRIKER PLATE 6"X8"	$ 840.00
SS-54	84258066	ROUND COLLAR 3"	$ 380.00
SS-54	84258067	SQUARE COLLAR 3.5"	$ 380.00
SS-54	84258068	ROUND COLLAR 4"	$ 380.00
SS-54	84258070	H BEAM COLLAR 4"X6"	$ 380.00
SS-54	84258071	ROUND COLLAR 6"	$ 380.00
SS-54	84258073	SQUARE COLLAR 6"	$ 380.00
SS-54	84258074	SQUARE COLLAR 8"	$ 380.00
SS-54	84258076	COLLAR 6"X8"	$ 390.00
SS-54	84258078	T POST ADAPTER	$ 180.00
SS-55	446019A1	66" PREPARATOR	$ 10,210.00
SS-55	446020A1	76" PREPARATOR	$ 10,960.00
SS-57	87053912	REAR STABILZER PKG	$ 2,770.00
SS-57	87053913	REAR STABILZER PKG	$ 2,870.00
SS-57	87373393	REAR STABILZER PKG	$ 3,230.00
SS-57	84518504	KIT REAR STABILIZER MID FRAME	$ 2,880.00
SS-57	84518505	KIT REAR STABILIZER LARGE FRAM	$ 2,660.00
SS-57	84518506	KIT HYD REAR STABILIZER RADIAL	$ 450.00
SS-57	84546390	HYD-REAR STABLILIZER- RAD	$ 260.00
SS-57	84518507	KIT HYD REAR STABILIZER VERTIC	$ 510.00
SS-57	84546391	HYD-REAR STABILIZER-VERT	$ 560.00
SS-57	87053914	GROUSER PAD SET	$ 200.00
SS-58	87381975	ROCK BUCKET- 66" 3 TINE	$ 1,960.00
SS-58	87381976	ROCK BUCKET- 66" 2 TINE	$ 2,170.00
SS-58	87381977	ROCK BUCKET- 75" 3 TINE	$ 2,130.00
SS-58	87381978	ROCK BUCKET- 75" 2 TINE	$ 2,250.00
SS-58	87381979	ROCK BUCKET- 84" 3 TINE	$ 2,250.00
SS-58	87389692	GRAPPLE OPTION- 75" AND 84"	$ 2,700.00
SS-59	87523116	ROCK SAW- RS18- 18"	$ 20,860.00
SS-59	87523117	ROCK SAW- RS24- 24"	$ 22,320.00
SS-59	84523784	EHF ROCK SAW- RS18- 18"	$ 21,550.00
SS-59	84523785	EHF ROCK SAW- RS24- 24"	$ 26,190.00
SS-59	87523118	DRUM/PICK KIT- RS18- 2.5"	$ 2,160.00
SS-59	87523119	DRUM/PICK KIT- RS18- 4"	$ 2,210.00
SS-59	87523120	DRUM/PICK KIT- RS24- 2.5"	$ 2,880.00
SS-59	87523121	DRUM/PICK KIT- RS24- 4"	$ 3,020.00
SS-59	87048529	WIRE HARNESS ADAPTER	$ 180.00
SS-61	87382368	ROOT RAKE- 72" W/GRAPPLECING	$ 5,900.00

PAGE #	PART NUMBER	PART DESCRIPTION	LIST PRICE
SS-61	87389704	ROOT RAKE- 78" W/GRAPPLE	$ 6,380.00
SS-61	87389705	ROOT RAKE- 84" W/GRAPPLE	$ 6,750.00
SS-62	47591786	ATTACHMENT ROT CUTTER 60IN SF	$ 6,960.00
SS-62	47591787	ATTACHMENT ROT CUTTER 72IN SF	$ 7,180.00
SS-62	47591788	ATTACHMENT ROT CUTTER 78IN SF	$ 7,690.00
SS-62	47591789	ATTACHMENT ROT CUTTER 72IN HF	$ 8,130.00
SS-62	47591790	ATTACHMENT ROT CUTTER 72IN HF	$ 8,130.00
SS-62	47591791	ATTACHMENT ROT CUTTER 78IN HF	$ 8,820.00
SS-62	47591792	ATTACHMENT ROT CUTTER 78IN HF	$ 8,820.00
SS-62	47591794	KIT PRESSURE GA ROTARY CUTTER	$ 300.00
SS-62	47591795	KIT PRESSURE GA ROTARY CUTTER	$ 300.00
SS-62	47591797	KIT DUAL WHEEL ROTARY CUTTER	$ 900.00
SS-62	47591801	KIT WEAR SHOE ROTARY CUTTER	$ 80.00
SS-62	47591798	SET REPLACEMENT BLADE 60IN	$ 240.00
SS-62	47591799	SET REPLACEMENT BLADE 72IN	$ 270.00
SS-62	47591800	SET REPLACEMENT BLADE 78IN	$ 290.00
SS-63	47898424	ROTARY CUTTER EXT DUTY 72IN	$ 14,460.00
SS-63	47898425	CARBIDE TEETH EXTREME CUTTER	$ 450.00
SS-63	47898429	KIT- WEAR SHOE- EXTREME CUTTER	$ 140.00
SS-64	87045796	SILAGE DEFACER	$ 6,510.00
SS-65	87596133	SILT FENCE INSTALLER- INT MT	$ 6,489.00
SS-65	87596134	SILT FENCE INSTALLER 3 PT MT	$ 6,489.00
SS-65	87596135	SILT FENCE INSTALLER 3 PT MT	$ 7,811.00
SS-65	87596136	SILT FENCE INSTALLER 3 PT MT	$ 7,811.00
SS-65	87596137	ADAPTER BRACKET- 3 PT MT	$ 746.00
SS-65	87596138	HYDR. TOP-LINK KIT- 3 PT MT	$ 355.00
SS-66	87487656	SKID HOE	$ 2,710.00
SS-66	86547428	BUCKET- POWER DIG- 10"	$ 540.00
SS-66	86547429	BUCKET- POWER DIG- 12"	$ 590.00
SS-66	86547430	BUCKET- POWER DIG- 16"	$ 630.00
SS-66	86547431	BUCKET- POWER DIG- 18"	$ 660.00
SS-66	86547432	BUCKET- POWER DIG- 24"	$ 680.00
SS-66	87487657	THUMB ATCHMT FACT. INSTALLED	$ 860.00
SS-66	87487658	THUMB ATCHMT FIELD INSTALLED	$ 650.00
SS-67	442972A1	BLADE- SNOW- HYD ANGLE 5'	$ 3,580.00
SS-67	H673881	BLADE- SNOW- HYD ANGLE 6'	$ 3,670.00
SS-67	H673869	BLADE- SNOW- HYD ANGLE 7'	$ 3,760.00
SS-67	47937193	STEEL EDGE- 60IN	$ 190.00
SS-67	47937194	STEEL EDGE- 72IN	$ 200.00
SS-67	47937195	STEEL EDGE- 84IN	$ 230.00
SS-67	47937196	RUBBER EDGE- 60IN	$ 570.00

PAGE #	PART NUMBER	PART DESCRIPTION	LIST PRICE
SS-67	47937197	RUBBER EDGE- 72IN	$ 550.00
SS-67	47937198	RUBBER EDGE- 84IN	$ 710.00
SS-68	442973A1	BLADE- SNOW- HD HYD ANGLE 7'	$ 4,780.00
SS-68	442974A1	BLADE- SNOW- HD HYD ANGLE 8'	$ 4,980.00
SS-68	442975A1	BLADE- SNOW- HD HYD ANGLE 9'	$ 5,100.00
SS-68	442977A1	BLADE- SNOW- HD HYD ANGLE 7'	$ 5,190.00
SS-68	442978A1	BLADE- SNOW- HD HYD ANGLE 8'	$ 5,470.00
SS-68	442979A1	BLADE- SNOW- HD HYD ANGLE 9'	$ 5,760.00
SS-68	47937199	STEEL EDGE- 84IN	$ 560.00
SS-68	47937200	STEEL EDGE- 96IN	$ 590.00
SS-68	47937201	STEEL EDGE- 108IN	$ 620.00
SS-68	47937204	RUBBER EDGE- 84IN	$ 630.00
SS-68	47937205	RUBBER EDGE- 96IN	$ 720.00
SS-68	47937206	RUBBER EDGE- 108IN	$ 800.00
SS-68	47937208	POLYURETHANE EDGE- 84IN	$ 1,190.00
SS-68	47937209	POLYURETHANE EDGE- 96IN	$ 1,360.00
SS-68	47531764	KIT-DEFLECTOR-84"	$ 200.00
SS-68	47531766	KIT-DEFLECTOR-96"	$ 220.00
SS-68	47531767	KIT-DEFLECTOR-108"	$ 250.00
SS-71	47531751	SNOW BLADE-TRIP EDGE-84"-CASE	$ 5,040.00
SS-71	47531752	SNOW BLADE-TRIP EDGE-96"-CASE	$ 5,270.00
SS-71	47531753	SNOW BLADE-TRIP EDGE-108"-CASE	$ 5,400.00
SS-71	47531754	KIT-RUBBER EDGE-84"?	$ 590.00
SS-71	47531755	KIT-RUBBER EDGE-96"?	$ 680.00
SS-71	47531756	KIT-RUBBER EDGE-108"	$ 760.00
SS-71	47937208	POLYURETHANE EDGE- 84IN	$ 1,190.00
SS-71	47937209	POLYURETHANE EDGE- 96IN	$ 1,360.00
SS-71	47531761	KIT-REPLACEMENT STEEL EDGE-84"	$ 280.00
SS-71	47531762	KIT-REPLACEMENT STEEL EDGE-96"	$ 320.00
SS-71	47531763	KIT-REPLACEMENT STEEL EDGE-108	$ 360.00
SS-71	47531764	KIT-DEFLECTOR-84"	$ 200.00
SS-71	47531766	KIT-DEFLECTOR-96"	$ 220.00
SS-71	47531767	KIT-DEFLECTOR-108"	$ 250.00
SS-71	84281638	MARKER KIT	$ 120.00
SS-72	84592485	SNOW BLOWER 72IN HF- CASE SSL	$ 11,410.00
SS-72	84421455	SNOWBLOWER- 72" HI FLOW CASE	$ 13,150.00
SS-72	84592487	SNOW BLOWER 72IN HF- CASE SSL	$ 14,460.00
SS-72	84592489	SNOW BLOWER 84IN HF- CASE SSL	$ 11,940.00
SS-72	84421456	SNOWBLOWER- 84" HI FLOW CASE	$ 13,820.00
SS-72	84592491	SNOW BLOWER 84IN HF- CASE SSL	$ 14,690.00
SS-72	84592493	SNOW BLOWER 96IN HF- CASE SSL	$ 14,950.00

PAGE #	PART NUMBER	PART DESCRIPTION	LIST PRICE
SS-72	47358362	SNOW BLOWER 84IN EHF-CASE SSL	$ 13,580.00
SS-72	47358363	SNOW BLOWER 84IN EHF-CASE SSL	$ 13,940.00
SS-72	87023320	UNIVERSAL ELECT. CNTRL PKG	$ 190.00
SS-72	47981840	KIT- CHUTE TRUCK LOADING	$ 1,590.00
SS-74	84421457	SNOWBLOWER- 60" STD FLOW CASE	$ 7,780.00
SS-74	84421458	SNOWBLOWER- 72" STD FLOW CASE	$ 7,970.00
SS-74	84421459	SNOWBLOWER-- 72" STD FLOW CASE	$ 8,410.00
SS-74	84421460	SNOWBLOWER- 84" STD FLOW CASE	$ 8,640.00
SS-74	87023319	WIRE HARNESS ADAPTER	$ 190.00
SS-74	87023320	UNIVERSAL ELECT. CNTRL PKG	$ 190.00
SS-75	87324180	BUCKET- SNOW- 84"	$ 1,960.00
SS-75	87324181	BUCKET- SNOW- 96"	$ 2,090.00
SS-75	87324182	BUCKET- SNOW- HD- 96"	$ 2,590.00
SS-75	87324183	BUCKET- SNOW- HD- 108"	$ 2,860.00
SS-75	87324184	CUTTING EDGE KIT- 84"	$ 520.00
SS-75	87324185	CUTTING EDGE KIT- 96"	$ 600.00
SS-75	87324186	CUTTING EDGE KIT- 108"	$ 720.00
SS-76	47625941	ATTACHMENT SNOW PUSH72IN-CASE	$ 3,180.00
SS-76	47625942	ATTACHMENT SNOW PUSH84IN-CASE	$ 3,590.00
SS-76	47625943	ATTACHMENT SNOW PUSH96IN-CASE	$ 4,020.00
SS-76	47625944	ATTACHMNT SNOW PUSH120IN-CASE	$ 4,090.00
SS-76	47645845	KIT PULLBACK 72IN FAC INSTALL	$ 840.00
SS-76	47645846	KIT PULLBACK 84IN FAC INSTALL	$ 920.00
SS-76	47645847	KIT PULLBACK 96IN FAC INSTALL	$ 1,000.00
SS-76	47645848	KIT PULLBACK 120IN FAC INSTALL	$ 940.00
SS-76	47625945	KIT PULLBACK 72IN FLD INSTALL	$ 490.00
SS-76	47625946	KIT PULLBACK 84IN FLD INSTALL	$ 530.00
SS-76	47625947	KIT PULLBACK 96IN FLD INSTALL	$ 580.00
SS-76	47625948	KIT PULLBACK 120IN FLD INSTALL	$ 640.00
SS-76	47626032	RUBBER EDGE 72IN FLD INSTALL	$ 490.00
SS-76	47626033	RUBBER EDGE 84IN FLD INSTALL	$ 550.00
SS-76	47626034	RUBBER EDGE 96IN FLD INSTALL	$ 590.00
SS-76	47626035	RUBBER EDGE 120IN FLD INSTALL	$ 670.00
SS-77	48026413	SNOW PUSH 8 FT, SSL MT, CASE	$ 9,315.00
SS-77	48026414	SNOW PUSH 10.5FT, SSL MT, CASE	$ 9,865.00
SS-80	87050300	STUMP GRINDER- SG26	$ 9,300.00
SS-80	87050301	STUMP GRINDER- SG30	$ 10,970.00
SS-80	87050304	ELECTRICAL CONTROL PKG	$ 800.00
SS-82	48145926	ATTACHMENT- 3 PT ADAPTER	$ 850.00
SS-84	84412545	TILLER HT52- 14-17 GPM - CASE	$ 5,980.00
SS-84	87311526	TILLER- HT52H- 52"	$ 5,980.00

PAGE #	PART NUMBER	PART DESCRIPTION	LIST PRICE
SS-84	84412546	TILLER HT66- 14-17 GPM - CASE	$ 6,570.00
SS-84	87311527	TILLER- HT66H- 66"	$ 6,570.00
SS-84	87343219	TILLER- HT66H- 66"	$ 7,350.00
SS-84	87343220	TILLER- HT78H- 78"	$ 7,850.00
SS-84	87311523	SCARIFIER KIT- HT52	$ 250.00
SS-84	87311524	SCARIFIER KIT- HT66- HT66H	$ 290.00
SS-84	87343216	SCARIFIER KIT- HT78H	$ 370.00
SS-85	87383459	TILT ATTACH- HD	$ 3,490.00
SS-85	84257968	TILT ATTACH HD W/DIVERTER CASE	$ 4,970.00
SS-85	84257970	UNIVERSAL CNTRL TILT ATTACH	$ 550.00
SS-85	84257971	ADAPTER 14 PIN TILT ATTACH	$ 370.00
SS-86	84406432	STEEL TRACKS- F-SERIES	$ 2,607.00
SS-86	87324797	TRACKS- F-SERIES- 10.00X16.5	$ 2,956.00
SS-86	87324798	TRACKS- F-SERIES- 31.5X16.5	$ 3,675.00
SS-86	87324799	TRACKS- F-SERIES- 10.00X16.5	$ 3,126.00
SS-86	87324800	TRACKS- F-SERIES- 12.00X16.5	$ 3,179.00
SS-86	87324801	TRACKS- F-SERIES-33/15.50X16.5	$ 3,877.00
SS-86	87324802	TRACKS- F-SERIES- 12.00X16.5	$ 3,362.00
SS-86	87324804	TRACKS- F-SERIES-33/15.50X16.5	$ 4,100.00
SS-86	87324805	TRACKS- F-SERIES- 12.00X16.5	$ 3,362.00
SS-86	87324806	TRACKS- F-SERIES-33/15.50X16.5	$ 4,100.00
SS-86	87324807	TRACKS- F-SERIES- 12.00X16.5	$ 3,538.00
SS-86	87324808	TRACKS- F-SERIES-33/15.50X16.5	$ 4,321.00
SS-86	84426158	WHEEL SPACER KIT 1.5"	$ 451.00
SS-86	84426159	WHEEL SPACER KIT 2"	$ 504.00
SS-87	87383455	TREE SHOVEL- 36"	$ 1,660.00
SS-87	87383456	TREE SHOVEL- 42"	$ 1,770.00
SS-87	87383457	TREE SHOVEL- 48"	$ 1,890.00
SS-88	87050389	TREE SPADE- 2625	$ 13,440.00
SS-88	87050390	TREE SPADE- 3625	$ 14,890.00
SS-88	87050391	TREE SPADE- 4425	$ 18,850.00
SS-88	87050392	CONTROL PKG- TREE SPADE	$ 1,630.00
SS-90	47725417	ATTACHMENT- TRENCHER 625-36IN	$ 5,850.00
SS-90	47725418	ATTACHMENT- TRENCHER 625-48IN	$ 6,090.00
SS-90	51519264	TRENCHER 625-36IN R&F - CASE	$ 6,294.00
SS-90	87050942	TRENCHER- 625	$ 4,180.00
SS-90	84421969	TRENCHER 640 HF 25-28 CASE	$ 5,500.00
SS-90	87554974	TRENCHER- 640	$ 6,610.00
SS-90	86620056	HYDRAULIC SIDESHIFT	$ 840.00
SS-90	86620052	BOOM & CRUMBER- 30"	$ 640.00
SS-90	86620053	BOOM & CRUMBER- 36"	$ 680.00

PAGE #	PART NUMBER	PART DESCRIPTION	LIST PRICE
SS-90	86620054	BOOM & CRUMBER- 42"	$ 710.00
SS-90	86620055	BOOM & CRUMBER- 48"	$ 740.00
SS-90	87554975	BOOM AND CRUMBER ASSY- 60"	$ 930.00
SS-93	87373395	VIBRATORY ROLLER- VRP48- 48"	$ 10,200.00
SS-93	87373396	VIBRATORY ROLLER- VRP66- 66"	$ 11,330.00
SS-93	87373397	VIBRATORY ROLLER- VRP73- 73"	$ 11,800.00
SS-93	87373398	VIBRATORY ROLLER- VRP84- 84"	$ 12,480.00
SS-94	87373001	VIBRATORY ROLLER- VRS48- 48"	$ 9,680.00
SS-94	87373002	VIBRATORY ROLLER- VRS66- 66"	$ 10,610.00
SS-94	87373003	VIBRATORY ROLLER- VRS73- 73"	$ 11,060.00
SS-94	87373004	VIBRATORY ROLLER- VRS84- 84"	$ 11,550.00
SS-95	87338935	WATER KIT- ROOF MOUNT	$ 1,550.00
SS-95	84399981	KIT WATER TANK ROOF MOUNT	$ 1,580.00
SS-95	86619372	NOZZLE KIT	$ 210.00
SS-95	87045462	WATER NOZZLE KIT	$ 300.00

T-631
Tractors: Skid Steers Attachments
727-1019

SKID / COMPACT TRACK LOADER
DISCOUNT OFF LIST PRICING INFO
SPECIFICATION 5.0

October, 2019

Vendor Name:	**Trueman Welters Inc**
Contact Person:	**Seth Strehler**
Street Address:	**1600 Highway 55 East**
P.O. Box:	
City, State, Zip	**Buffalo,Minnesota,55313**
Phone #:	**763-682-2200**
Toll Free #:	
Email Address:	seth@welters.net
Website:	**trueman-welters.com**

SPEC NUMBER	PERCENTAGE DISCOUNT PRICING	ANSWER
5.1	**MANUFACTURER**	New Holland
5.2	**DATE AND ID. OF PRICE LIST**	May 22 2019
5.3	**PERCENTAGE DISCOUNT FROM PRICE LIST**	%
	L216	30%
	L218	30%
	L220	30%
	L221	30%
	L228	33%
	L234	33%
	C227	32%
	C232	32%
	C234	34%
	C237	34%
	C245	34%

5.4 PRICE FOR ADDITIONAL MANUALS (1 of each included at no cost, per specs)

ADDITIONAL SERVICE MANUAL	Digital	150.00
	Paper	750.00
ADDITIONAL PARTS MANUAL	Digital	ON LINE FREE
	Paper	ON LINE ONLY
PRICE FOR ADDITIONAL OPERATIONS MANUAL	Digital	FREE
	Paper	110.00

5.5 PERFORMANCE/ WARRANTY OPTIONS

Use this section to offer performance/warranty options, number these items starting with 5.1, 5.2, etc.
(Specify years, miles or hours extended term covers.)

ALL SSL UNITS 36 MONTH 3000HR 0 DEDUCTABLE INCLUCES BASE WARRENTY	$ 3,950.00
ALL CTL UNITS 36 MONTH 3000HR 0 DEDUCTABLE INCLUCES BASE WARRENTY	$ 6,500.00
ALL SSL UNITS 48 MONTH 4000HR 0 DEDUCTABLE INCLUCES BASE WARRENTY	$ 5,950.00
ALL CTL UNITS 48 MONTH 4000HR 0 DEDUCTABLE INCLUCES BASE WARRENTY	$ 9,250.00

5.6 NEW EQUIPMENT RENTAL PROGRAM

If rental programs are available on the new equipment offered, with the option to purchase, list the hourly/weekly/monthly rental rate. Indicate the percent of rental fee paid by the purchaser that will be applied to the purchase price. See Solicitation Special Terms & Conditions.

Hourly Rental Rate:	NO BID
Weekly Rental Rate:	NO BID
Monthly Rental Rate:	NO BID
Percent (%) of Rental Fee applied to purchase price:	%

5.7 VENDOR OWNED RENTAL RETURN OR DEMO EQUIPMENT PROGRAM

See Solicitation Special Terms and Conditions.

DEDUCT cost per Used Hour from the original Contract Price: NO BID

5.8 DISCOUNT OFF LIST PRICE FOR RELATED PARTS & ACCESSORIES 14%

(See Special Terms and Conditions)

5.9 DELIVERY STARTING POINT

City, State, Zip	BUFFALO ,MN 55313
Price Per Loaded Mile:	$3.50

(See Special Terms and Conditions - no flat rate allowed.)

5.10 INSTALLATION - PER HOUR (Hourly Shop Rate):

(Installation services may be requested on an "as needed" basis - see special terms and conditions.) $119.00

U.S. PRICE LIST

SKID STEER LOADER

EFFECTIVE May 22, 2019

Below is a list of Family(s) and Model(s) that are included in this price list.

Skid Steer Loader

L216
L218
L220
L221
L228
L234

Copyright 2019 By

CNH Industrial America LLC

INDEX

Skid Steer Loader Line Price & Data Pages

EQUIPMENT DESCRIPTION	PAGE
L216	3
L218	17
L220	32
L221	48
L228	63
L234	78

L216 T4 FINAL SKID STEER LOADERS US
PRICE LIST

(Wichita, KS)

Standard Equipment

ENGINE:
L216:
ISM N844LT water cooled diesel engine
134 CID (2.2 L) Turbo
Tier 4 Final Certified
Horsepower:
- Gross 60
- Net 57

120 amp alternator
Air cleaner - dual element
Anti-freeze solution to -34º F
Fuel tank - 16 gal. (U.S.)
Spark Arresting Diesel Particulate Filter (DPF) Muffler
Single Plane, Top and Bottom Oil Cooler/Radiator Configuration
Glow Plugs
Maintenance free 925 CCA battery

OPERATOR'S PROTECTIVE STRUCTURE:
ROPS/FOPS Level 1 canopy with side screens
Control lockout system
Tilt forward ROPS/FOPS
Electric parking brake control
Electronic Hand throttle
Mechanical Foot Controls
Operator's compartment floor cleanout
Rear window with emergency escape
Suspension Seat, vinyl with 2" retractable lap seat belt
Dome Light
12V Power plug socket
Cup holder
Top window

OPERATOR'S PROTECTIVE STRUCTURE (Continued):
Headliner
Alarm package (backup and horn)

OTHER STANDARD FEATURES:
Lights - 2 front & 2 rear (halogen)
Pre-wired for rotating beacon
Service access hood, lockable
Single point daily service
Tail lights
Remote Oil and Fuel Filters
Block Heater 120V - USA

INSTRUMENTATION:
Advanced Instrument Cluster with Hour meter, fuel gauge, engine and oil temperature gauge, diagnostic features and security lock-out
Warning lights with alarms:
Engine coolant temperature
Systems Critical Stop
Electronic System Indicator
Engine System Indicator
Hydraulic System Indicator
Hydraulic oil temperature
Warning alarms:
Battery voltage (plus display)
DPF
Indicator Light:
Engine preheat
Parking brake
Seat belt reminder

DRIVE:
Manual controlled hydrostatic four wheel drive
Spring applied hydraulic release (SAHR) disc parking brake
Dynamic braking
ASA #80 drive chain

HYDRAULICS:
6 micron oil filtration system
3 spool loader control valve
Auxiliary hydraulics, Proportional thumb wheel activated: loader arm mounted with ISO specification flat

L216 T4 FINAL SKID STEER LOADERS US
PRICE LIST

(Wichita, KS)

Standard Equipment

face "connect-under-pressure"
disconnects
Including case drain
Standard duty hydraulic oil cooler
Loader arm float position
Auxiliary hydraulic function lockout
override
Loader arm circuit lockout override

LOADER:
Mechanical attachment coupler
Radial arm geometry
Loader lift arm support strut
For L213:
SAE operating load: 1300 lbs.
Tipping load: 2600 lbs.
For L216:
SAE operating load: 1600 lbs.
Tipping load: 3200 lbs.

TIRES:
10 x 16.5 Heavy Duty - 59 inch
Over-the-Tire Width (OTW)

L216 T4 FINAL SKID STEER LOADERS US
PRICE LIST

(Wichita, KS)

Models

COMMERCIAL MODEL	VERSION	MODEL	Weight	Factory Data	List Price
L216-T4B	Tier 4 B Regulated	L215/L216	5,210 LB		$45,670.00

L216 T4 FINAL SKID STEER LOADERS US
PRICE LIST

(Wichita, KS)

Factory Supplied Options

Order Code	Description	Weight	Factory Data	List Price

FAST PICK CONFIGURATION

SD_T9999 NEW HOLLAND CTL/SSL PACKAGES

		761601	761601 FC1-Basic-ROPS **FOOT CONTROLS** **MECH CONTROL 1SPD** **REAR DOOR** **MANUAL COUPLER** **OPEN NO HEAT OR HVAC** **SUSPENSION SEAT** **STEEL LIGHTS W/ TS** **BLOCK HEATER 120V-USA** **LAP BAR**			($4,000.00)
		761602	761602 FC1-Basic-Cab **FOOT CONTROLS** **MECH CONTROL 1SPD** **REAR DOOR** **MANUAL COUPLER** **HVAC-READY GLASS DOOR** **SUSPENSION SEAT** **STEEL LIGHTS W/ TS** **BLOCK HEATER 120V-USA** **LAP BAR**			($4,000.00)
		761604	761604 FC1-Plus-Cab **FOOT CONTROLS** **MECH CONTROL 1SPD** **REAR DOOR** **HYDRAULIC COUPLER** **HVAC-READY GLASS DOOR** **SUSPENSION SEAT** **STEEL LIGHTS W/ TS** **BLOCK HEATER 120V-USA** **LAP BAR**			($4,000.00)

L216 T4 FINAL SKID STEER LOADERS US
PRICE LIST

(Wichita, KS)

		761605	761605 FC1-Deluxe-ROPS **FOOT CONTROLS** **MECH CONTROL 1SPD** **REAR DOOR** **HYDRAULIC COUPLER** **OPEN NO HEAT OR HVAC** **SUSPENSION SEAT** **STEEL LIGHTS W/ TS** **BLOCK HEATER 120V-USA** **LAP BAR**			($4,000.00)
		761606	761606 FC1-Deluxe-Cab **FOOT CONTROLS** **MECH CONTROL 1SPD** **REAR DOOR** **HYDRAULIC COUPLER** **HVAC-READY GLASS DOOR** **AIR SUSPENSION SEAT** **STEEL LIGHTS W/ TS** **BLOCK HEATER 120V-USA** **LAP BAR**			($4,000.00)
		761607	761607 HC1-Basic-ROPS **HAND CONTROLS** **MECH CONTROL 1SPD** **REAR DOOR** **MANUAL COUPLER** **OPEN NO HEAT OR HVAC** **SUSPENSION SEAT** **STEEL LIGHTS W/ TS** **BLOCK HEATER 120V-USA** **LAP BAR**			($4,000.00)
		761608	761608 HC1-Basic-Cab **HAND CONTROLS** **MECH CONTROL 1SPD** **REAR DOOR** **MANUAL COUPLER** **HVAC-READY GLASS DOOR** **SUSPENSION SEAT** **STEEL LIGHTS W/ TS** **BLOCK HEATER 120V-USA** **LAP BAR**			($4,000.00)
			.		)	

L216 T4 FINAL SKID STEER LOADERS US
PRICE LIST

(Wichita, KS)

CONTROLS AND TRANSMISSION

SD_01100 CONTROLS LEVEL

		761028	1 Speed Mechanical Controls **Available in "H Pattern" Hand Controls or Hand and Foot Controls**			No Charge
		761030	1 Speed E-H Controls **Electro-Hydraulic Switchable (ISO-H Pattern) Controls with Single Speed (includes arm rests and foot throttle)**			$2,096.00

SD_01401 DRIVE CONTROL TYPE

		761040	Hand Controls **H Pattern, ONLY Select with Mechanical Controls (761028 or 761029)**			No Charge
		761041	Hand and Foot Controls **ONLY Select with Mechanical Controls (761028 or 761029)**			No Charge
		761042	E-H Controls **ONLY Select with E-H Controls (761030 or 761031)**			No Charge

ROPS/CAB

SD_05009 CAB

		761043	Open Cab (No Heat or HVAC) **with top window and keyed start**			No Charge
		761220	Enclosed Cab w/HVAC Ready - G **HVAC Ready Cab with GLASS front door.** **When ordering, select "Move to BIC" and contact them to add HVAC Kit. BIC Phone: (316) 943-2515 Email: jrmuzzy@burlinst.com** **Includes: side windows, front glass door with wiper, shoulder belt, radio with speakers and keyless start.**			$5,028.00
		761221	Enclosed Cab w/HVAC Ready - D **HVAC Ready Cab with DEMO door.** **When ordering, select "Move to BIC" and contact them to add HVAC Kit. BIC Phone: (316) 943-2515 Email: jrmuzzy@burlinst.com** **Includes: side windows, front demolition door with wiper, shoulder belt, radio with speakers and keyless start.**			$6,810.00

SD_05016 OPEN CAB TRIM

		X05016X	No Open Cab Interior Trim Pkg			No Charge
		761186	Open Cab Interior Trim Package **For use with Open Cab. Covers interior sides and rear.**			$310.00

L216 T4 FINAL SKID STEER LOADERS US
PRICE LIST

(Wichita, KS)

SD_05185 CAB SEAT

		761052	Suspension Seat (Vinyl)			No Charge
		761062	Air Ride Suspension Seat **(Fabric) with temperature control** **(may not be ordered with Open Cab option 761043).**			$582.00

SD_K5104 LAP BAR-NH

		XK5104X	NO LAP BAR NEW HOLLA **Comes with seat belt only. Seat belt must be engaged for machine operation.**			($265.00)
		761224	LAP BAR NEW HOLLAND **Lap Bar Installed from Factory.** **Seat belt included. Sensor moved from seat belt to the lap bar for machine operation (lap bar must be down to operate).**			No Charge

COUPLER

SD_K5101 COUPLERS

		726003	Manual Coupler			No Charge
		726004	Hydraulic Coupler			$1,051.00

BLOCK HEATER

SD_02086 BLOCK HEATER

		761048	Block Heater (120V)			No Charge

TURN SIGNALS

SD_06056 EXTERIOR LIGHTS

		463739	STEEL LIGHTS WITH TURN SIGNALS			No Charge

OPERATORS MANUAL

SD_32035 LANGUAGE OPTIONS

		761085	English			No Charge
		761088	French			No Charge
		761097	Spanish			No Charge

L216 T4 FINAL SKID STEER LOADERS US
PRICE LIST

(Wichita, KS)

OPTIONAL PACKAGES

SD_01201 OPTION PACKAGES

		761032	Standard Equipment Only			No Charge
		761033	Performance Package **Contains ON/OFF One-way Self-Leveling and Glide Ride**			$1,174.00

TIRES

SD_16068 TIRE OPTIONS

		8501207	10x16.5 Heavy Duty (59 OTW) **STANDARD TIRE** **8PR Stamped Center**			No Charge
		8505607	10x16.5 TWEEL All Terrain			$3,000.00

FRONT ATTACHMENTS

BUCKETS

SD_K5231 BUCKETS

		XK5231X	No Bucket			No Charge
		Dirt & Foundry Bucket				
		761123	60" Dirt & Foundry Bucket **(1524 mm), 11.5 cu. ft. Heaped Capacity**			$798.00
		761124	66" Dirt & Foundry Bucket **(1676 mm), 15.2 cu. ft. Heaped Capacity**			$879.00
		761125	72" Dirt & Foundry Bucket **(1829 mm), 16.7 cu. ft. Heaped Capacity**			$1,000.00
		Heavy Duty Dirt Bucket				
		761141	66" Heavy Duty Dirt Bucket **(1676 mm), 13.3 cu. ft. Heaped Capacity**			$1,134.00
		Light Material Bucket				
		761135	60" Light Material Bucket **(1524 mm), 19.7 cu. ft. Heaped Capacity**			$700.00
		761136	72" Light Material Bucket **(1829 mm), 23.7 cu. ft. Heaped Capacity**			$841.00
		Low Profile Bucket				
		761127	60" Low Profile Bucket **(1524 mm), 11.5 cu. ft. Heaped Capacity**			$749.00
		761128	66" Low Profile Bucket **(1676 mm), 13.2 cu. ft. Heaped Capacity**			$827.00
		761129	72" Low Profile Bucket **(1829 mm), 14.5 cu. ft. Heaped Capacity**			$903.00

NEW HOLLAND CONSTRUCTION

L216 T4 FINAL SKID STEER LOADERS US
PRICE LIST

(Wichita, KS)

Low Profile Extended Bucket						
		761130	60" Low Profile Extended **(1524 mm), 14.3 cu. ft. Heaped Capacity**			$834.00
		761131	66" Low Profile Extended **(1676 mm), 15.5 cu. ft. Heaped Capacity**			$922.00
		761132	72" Low Profile Extended **(1829 mm), 17.1 cu. ft. Heaped Capacity**			$1,004.00
SmartFit Teeth						
		761254	72" HD Ext. w/ SmartFit Teeth **(1829 mm) 17.4 cu. ft. Heaped Capacity**			$1,692.00

BOLT ON CUTTING EDGE

SD_K6399 BOLT ON CUTTING EDGE

		XK6399X	No Bolt on Cutting Edge			No Charge
		761145	60" Bolt on Cutting Edge			$196.00
		761146	66" Bolt on Cutting Edge			$216.00
		761147	72" Bolt on Cutting Edge			$241.00

MOVE TO BIC

SPECIAL PAINT

SD_50103 SPECIAL PAINT

		X50103X	No Special Paint			No Charge

L216 T4 FINAL SKID STEER LOADERS US
PRICE LIST

(Wichita, KS)

		726029	Special Paint **The price listed is for a color change only from the standard factory color: CNH #86572648 (NH-Yellow). All Special Color formulations will be applied using approved factory processes and materials. Metallic or other special formulations and/or materials are not available. A color chip must be provided to CNH for non CNH colors. A minimum lead time of 8 business weeks will be required prior to production.** **Unless specified, regular production decals will be applied. Requests can be made that decals not be applied. However, SAFETY decals MUST BE APPLIED in all cases. The following components remain CNH grey: lift & bucket cylinders, front coupler and attachments, ROPS, side screens, upper chassis, control links, rear door, and wheels.**			$2,999.00

TELEMATICS

SD_K6450 TELEMATICS

		XK6450X	No Telematics			No Charge
		761198	NH FleetForce On-board **Unit is factory fit with wiring and modem.** **To order the Service Subscription contact Service Parts.**			$816.00

L216 T4 FINAL SKID STEER LOADERS US
PRICE LIST

(Wichita, KS)

Factory Supplied Attachments

Order Code			Description	Weight	Factory Data	List Price
Basic Attachments						
		735030006	Heavy Duty Rear Door Kit Install Time = 0.5 hours Rear door insert	32 LB		$308.00
		735006006	Beacon Kit Install Time = 0.2 hours	1 LB		$154.00
		735007006	4-Corner LED Strobe Kit Install Time = 0.5 hours Reference dependency matrix.	24 LB		$500.00
		735159006	Heater Complete Install Time = 11.0 hours Reference dependency matrix.	135 LB		$1,373.00
		735146016	Three Point Seat Belt Install Time = 1.0 hours	4 LB		$233.00
		735011006	Glass Front Door Kit Install Time = 2.0 hours Center mounted wiper. Requires three point seat belt. Reference dependency matrix.	182 LB		$1,543.00
		735012006	Demo Front Door Kit Install Time = 2.0 hours 1/2" polycarbonate door (will not shatter like glass). Center mounted wiper. Requires three point seat belt. Reference dependency matrix.	182 LB		$2,711.00
		735013006	Cab Side Windows Kit Install Time = 1.0 hours	139 LB		$865.00
		735016006	Radio Kit Install Time = 2.0 hours	16 LB		$413.00
		735150006	Open Cab Interior Trim Kit Install Time = 1.0 hours	25 LB		$372.00
		735020086	Road Light Kit Install Time = 2.5 hours Added front lights with turn signals that mount on the loader booms. Added rear lights with signals. (Reference image in SSL/CTL Brochure)	22 LB		$608.00
		735021016	Multi-Function Front Electrical Mech Kit For EH and Mech machines Install Time = 2.0 hours Reference dependency matrix.	11 LB		$274.00
		735022006	One Way Self Level Kit Install Time = 4.0 hours	9 LB		$485.00
		735023026	KIT, RIDE CONTROL Install Time = 4.0 hours Reference dependency matrix.	32 LB		$465.00
		735024026	Hydraulic Coupler Kit Install Time = 8.0 hours Reference dependency matrix. For converting mechanical coupler to hydraulic coupler.	172 LB		$1,236.00

L216 T4 FINAL SKID STEER LOADERS US
PRICE LIST

(Wichita, KS)

		735029006	Battery Disconnect Kit Install Time = 2.0 hours	2 LB		$151.00
		735037026	Single Point Lift Hook Kit Install Time = 4.0 hours	284 LB		$1,030.00
		735038006	FOPS Level 2 Modification Kit Install Time = 1.0 hours	61 LB		$343.00
		735039046	Extra Counterweight Kit Install Time = 0.5 hours	231 LB		$412.00
		735040086	Aspirator (Precleaner) Kit Install Time = 2.0 hours For use with TIER 4 models ONLY.	13 LB		$317.00
		735042006	Interior Mirror Kit Install Time = 0.5 hours	4 LB		$58.00
		735045106	Foot Control Conversion Kit Install Time = 8.0 hours For use with Tier 4 models ONLY. Conversion kit to Hand&Foot from Hand (H-Pattern). Not available for units equipped with Electro Hydraulic (EH) controls.	55 LB		$615.00
		735046036	Hand Control Conversion Kit Install Time = 6.0 hours For use with Tier 4 models ONLY. Converting to Hand (H-Pattern) from Hand&Foot. Not available for units equipped with Electro Hydraulic (EH) controls.	76 LB		$824.00
		735047016	120V Block Heater Kit Install Time = 0.5 hours	3 LB		$206.00
		735048016	220V Block Heater Kit Install Time = 0.5 hours	3 LB		$206.00
		735153006	High Beam Light Kit Install Time = 1.0 hours Two added front lights; mounted inward of the standard front lights. Adding this kit would yield: four front lights along with turn signals (if already equipped with signals). Reference image in SSL/CTL Brochure.	11 LB		$199.00
		735151046	Debris Seal Kit Install Time = 2.0 hours Reduces debris ingression to engine compartment and chassis	23 LB		$333.00
		735161016	Heavy Duty Front Lights - Vertical Model Must order supporting bracket (84338448) and two (2)harnesses (84306340) from CNH Parts to complete kit.	26 LB		$372.00
		735178046	Radiator Debris Kit Install Time = 2.0 hours L213 Tier 4 ONLY. To prevent large foreign material from damaging the radiator.	10 LB		$333.00
		735178066	Radiator Debris Kit Install Time = 2.0 hours L216 Tier 4 ONLY. To prevent large foreign material from damaging the radiator.	10 LB		$333.00

NEW HOLLAND CONSTRUCTION

L216 T4 FINAL SKID STEER LOADERS US
PRICE LIST

(Wichita, KS)

		735179006	Lap Bar Kit Install Time = 2.0 hours	40 LB		$600.00

Pallet Forks

		735075006	Pallet Fork Frame w/48" Tines	540 LB		$1,265.00

Dirt & Foundry Bucket

		735053016	60" Dirt & Foundry Bucket (1524 mm), 11.3 cu. ft. heaped capacity	293 LB		$798.00
		735054016	66" Dirt & Foundry Bucket (1676 mm), 14.8 cu. ft. Heaped Capacity	374 LB		$881.00
		735055016	72" Dirt & Foundry Bucket (1829 mm), 16.2 cu. ft. Heaped Capacity	407 LB		$1,000.00

Low Profile Bucket

		735057016	60" Low Profile Bucket (1524 mm), 12.0 cu. ft Heaped Capacity	367 LB		$749.00
		735058016	66" Low Profile Bucket (1676 mm), 13.4 cu. ft. Heaped Capacity	431 LB		$827.00
		735059016	72" Low Profile Bucket (1829 mm), 14.8 cu. ft. Heaped Capacity	471 LB		$903.00

Low Profile Extended Bucket

		735060016	60" Low Profile Extended Bucket (1524 mm), 14.1 cu. ft. Heaped Capacity	391 LB		$834.00
		735061016	66" Low Profile Extended Bucket (1676 mm), 15.9 cu. ft. Heaped Capacity	460 LB		$922.00
		735062016	72" Low Profile Extended Bucket (1829 mm), 17.7 cu. ft. Heaped Capacity	504 LB		$1,004.00

Light Material Bucket

		735065016	60" Light Material Bucket (1524 mm), 19.4 cu. ft. Heaped Capacity	360 LB		$700.00
		735066016	72" Light Material Bucket (1829 mm), 23.3 cu. ft. Heaped Capacity	466 LB		$841.00

Manure Slurry Bucket

		735068016	60" Manure-Slurry Bucket (1524 mm), 15.9 cu. ft. Heaped Capacity	360 LB		$711.00
		735069016	72" Manure-Slurry Bucket (1829 mm), 19.1 cu. ft. Heaped Capacity	469 LB		$856.00

Heavy Duty Dirt Bucket

		735071016	66" Heavy Duty Dirt Bucket (1676 mm), 13.1 cu. ft. Heaped Capacity	449 LB		$1,134.00
		735072016	72" Heavy Duty Dirt Bucket (1829 mm), 14.1 cu. ft. Heaped Capacity	501 LB		$1,409.00

SmartFit Teeth

		735184006	72" HDE Bucket w/ Teeth (1829 mm) 17.4 cu. ft. Heaped Capacity	624 LB		$1,692.00
		735185006	78" HDE Bucket w/ Teeth (1981 mm) 18.9 cu. ft. Heaped Capacity	697 LB		$1,898.00

L216 T4 FINAL SKID STEER LOADERS US
PRICE LIST

(Wichita, KS)

		735186006	84" HDE Bucket w/ Teeth (2134 mm) 20.5 cu. ft. Heaped Capacity	728 LB		$2,032.00

BASIC ATTACHMENTS

		735019116	KIT TURN SIGNAL Plastic Lights	7 LB		$247.00

Heavy Duty Tire Assembly

		735082006	RH10X16.5 HVY DUTY CA 59OTW Reference Loader Stop matrix. 1 tire assembly	116 LB		$330.00
		735104006	10x16.5 Heavy Duty (59 OTW) LH Kit Reference Loader Stop matrix. 1 tire assembly	116 LB		$330.00

Premium Tire Assembly

		735122006	27x10.5-15 Premium (64 OTW) RH Kit Galaxy Beefy Baby III Reference Loader Stop matrix. 1 tire assembly	158 LB		$309.00
		735123006	27x10.5-15 Premium (64 OTW) LH Kit Galaxy Beefy Baby III Reference Loader Stop matrix. 1 tire assembly	158 LB		$309.00

Tweels

		735180006	KIT RH 10X16.5 TWEEL 1 Tweel assembly - RH	178 LB		$750.00
		735181006	KIT LH 10X16.5 TWEEL 1 Tweel Assembly - LH	178 LB		$750.00

L218 T4 FINAL SKID STEER LOADER
US PRICE LIST

(Wichita, KS)

Standard Equipment

ENGINE:
- ISM 844LT water cooled diesel engine
- 134 CID (2.2 L) Turbo
- Tier 4 Final Certified
- High Pressure Common Rail (HPCR) Fuel Injection
- Horsepower:
  - Gross 60
  - Net 57
- 120 amp alternator
- Air cleaner - dual element
- Anti-freeze solution to -34º F
- Fuel tank - 20 gal. (U.S.)
- Spark Arresting Diesel Oxidation Catalyst (DOC) Muffler
- 3-stack, after cooler, radiator, oil cooler configuration
- Glow Plugs
- Maintenance free 925 CCA battery

OPERATOR'S PROTECTIVE STRUCTURE:
- ROPS/FOPS Level 1 canopy with side screens
- Control lockout system
- Tilt forward ROPS/FOPS
- Electric parking brake control
- Electronic Hand throttle
- Mechanical Foot Controls
- Operator's compartment floor cleanout
- Rear window with emergency escape
- Suspension Seat, vinyl with 2" retractable lap seat belt
- Dome Light
- 12V Power plug socket
- Cup holder and Tool Pocket
- Top window
- Headliner
- Alarm package (backup and horn)

OTHER STANDARD FEATURES:
- Lights - 2 front, 2 rear (halogen)
- Pre-wired for rotating beacon
- Service access hood, lockable
- Steel Hoods & Covers
- Single point daily service
- Tail lights
- Remote Oil and Fuel Filters
- Block Heater 120V - USA

INSTRUMENTATION:
- Advanced Instrument Cluster with Hour meter, fuel gauge, engine and oil temperature gauge, diagnostic features and security lock-out
- Warning lights with alarms:
  - Engine coolant temperature
  - Systems Critical Stop
  - Electronic System Indicator
  - Engine System Indicator
  - Hydraulic System Indicator
  - Hydraulic oil temperature
- Warning alarms:
  - Battery voltage (plus display)
- Indicator Light:
  - Engine preheat
  - Parking brake
  - Seat belt reminder

DRIVE:
- Manual controlled hydrostatic four wheel drive
- Spring applied hydraulic release (SAHR) disc parking brake
- Dynamic braking
- ASA #80 drive chain

L218 T4 FINAL SKID STEER LOADER
US PRICE LIST

(Wichita, KS)

Standard Equipment

HYDRAULICS:
- 6 micron oil filtration system
- 3 spool loader control valve
- Auxiliary hydraulics, Proportional thumb wheel activated: loader arm mounted with ISO specification flat face "connect-under-pressure" disconnects Including case drain
- Heavy duty hydraulic oil cooler
- Loader arm float position
- Auxiliary hydraulic function lockout override
- Loader arm circuit lockout override

LOADER:
- Mechanical attachment coupler
- Vertical Lift SUPERBOOM Geometry
- In-CAB Boom Lock
- SAE operating load: 1800 lbs.
- Tipping load: 3600 lbs.

TIRES:
- 10 x 16.5 Heavy Duty - 64 inch Over-the-Tire Width (OTW)

L218 T4 FINAL SKID STEER LOADER
US PRICE LIST

(Wichita, KS)

Models

COMMERCIAL MODEL	VERSION	MODEL	Weight	Factory Data	List Price
L218-T4B	Tier 4 B Regulated	L218	5,630 LB		$47,535.00

L218 T4 FINAL SKID STEER LOADER
US PRICE LIST

(Wichita, KS)

Factory Supplied Options

Order Code	Description	Weight	Factory Data	List Price

FAST PICK CONFIGURATION

SD_T9999 NEW HOLLAND CTL/SSL PACKAGES

		761603	761603 FC1-Basic-Cab **FOOT CONTROLS** **MECH CONTROL 1SPD** **FRONT ELEC/MULTI-FUNC** **REAR DOOR** **MANUAL COUPLER** **HVAC-GLASS DOOR** **SUSPENSION SEAT** **STEEL LIGHTS W/ TS** **BLOCK HEATER 120V-USA** **LAP BAR**			($4,000.00)
		761609	761609 EH2-Basic-ROPS **E-H CONTROLS** **E-H CONTROL 2SPD** **FRONT ELEC/MULTI-FUNC** **REAR DOOR** **MANUAL COUPLER** **OPEN NO HEAT OR HVAC** **SUSPENSION SEAT** **STEEL LIGHTS W/ TS** **BLOCK HEATER 120V-USA** **LAP BAR**			($4,000.00)
		761611	761611 EH2-Plus-Cab **E-H CONTROLS** **E-H CONTROL 2SPD** **FRONT ELEC/MULTI-FUNC** **REAR DOOR** **HYDRAULIC COUPLER** **HVAC-GLASS DOOR** **SUSPENSION SEAT** **STEEL LIGHTS W/ TS** **BLOCK HEATER 120V-USA** **LAP BAR**			($4,000.00)

L218 T4 FINAL SKID STEER LOADER
US PRICE LIST

(Wichita, KS)

		761614	761614 EH2-Deluxe-Air Cab **E-H CONTROLS** **E-H CONTROL 2SPD** **FRONT ELEC/MULTI-FUNC** **REAR DOOR** **HYDRAULIC COUPLER** **HVAC-GLASS DOOR** **AIR SUSPENSION SEAT** **STEEL LIGHTS W/ TS** **BLOCK HEATER 120V-USA** **LAP BAR**			($4,000.00)
		761617	761617 FC2-Basic-ROPS **FOOT CONTROLS** **MECH CONTROL 2SPD** **FRONT ELEC/MULTI-FUNC** **REAR DOOR** **MANUAL COUPLER** **OPEN NO HEAT OR HVAC** **SUSPENSION SEAT** **STEEL LIGHTS W/ TS** **BLOCK HEATER 120V-USA** **LAP BAR**			($4,000.00)
		761619	761619 FC2-Plus-Cab **FOOT CONTROLS** **MECH CONTROL 2SPD** **FRONT ELEC/MULTI-FUNC** **REAR DOOR** **HYDRAULIC COUPLER** **HVAC-GLASS DOOR** **SUSPENSION SEAT** **STEEL LIGHTS W/ TS** **BLOCK HEATER 120V-USA** **LAP BAR**			($4,000.00)
		761622	761622 FC2-Deluxe-Air Cab **FOOT CONTROLS** **MECH CONTROL 2SPD** **FRONT ELEC/MULTI-FUNC** **REAR DOOR** **HYDRAULIC COUPLER** **HVAC-GLASS DOOR** **AIR SUSPENSION SEAT** **STEEL LIGHTS W/ TS** **BLOCK HEATER 120V-USA** **LAP BAR**			($4,000.00)

L218 T4 FINAL SKID STEER LOADER
US PRICE LIST

(Wichita, KS)

		761625	761625 FC2-Elite-Air Cab **FOOT CONTROLS** **MECH CONTROL 2SPD** **PERF w/FRONT ELEC MULTI FUNCTION CONTROL, SELF LEVEL, AND** **RIDE CONTROL** **REAR DOOR** **HYDRAULIC COUPLER** **HVAC-GLASS DOOR** **AIR SUSPENSION SEAT** **STEEL LIGHTS W/ TS** **BLOCK HEATER 120V-USA** **LAP BAR**			($4,000.00)

CONTROLS AND TRANSMISSION

SD_01100 CONTROLS LEVEL

		761028	1 Speed Mechanical Controls **Available in "H Pattern" Hand Controls or Hand and Foot Controls**			No Charge
		761029	2 Speed Mechanical Controls **Available in "H Pattern" Hand Controls or Hand and Foot Controls**			$1,307.00
		761031	2 Speed E-H Controls **Electro-Hydraulic Switchable (ISO-H Pattern) Controls with Two Speed (includes arm rests and foot throttle)**			$2,095.00

SD_01401 DRIVE CONTROL TYPE

		761040	Hand Controls **H Pattern, ONLY Select with Mechanical Controls (761028 or 761029)**			No Charge
		761041	Hand and Foot Controls **ONLY Select with Mechanical Controls (761028 or 761029)**			No Charge
		761042	E-H Controls **ONLY Select with E-H Controls (761030 or 761031)**			No Charge

ROPS/CAB

SD_05009 CAB

		761043	Open Cab (No Heat or HVAC) **with top window and keyed start**			No Charge
		761045	Enclosed Cab with HVAC **Includes side windows, front glass door with wiper, shoulder belt, radio with speakers and keyless start**			$5,664.00

L218 T4 FINAL SKID STEER LOADER
US PRICE LIST

(Wichita, KS)

		761183	Enclosed Cab w/HVAC -Demo Door **Includes side windows, 1/2" polycarbonate (will not shatter like glass), front door with wiper, shoulder belt, radio with speakers, and keyless start.**			$7,445.00

SD_05016 OPEN CAB TRIM

		X05016X	No Open Cab Interior Trim Pkg			No Charge
		761186	Open Cab Interior Trim Package **For use with Open Cab. Covers interior sides and rear.**			$310.00

SD_05185 CAB SEAT

		761052	Suspension Seat (Vinyl)			No Charge
		761062	Air Ride Suspension Seat **(Fabric) with temperature control** **(may not be ordered with Open Cab option 761043).**			$582.00

SD_K5104 LAP BAR-NH

		XK5104X	NO LAP BAR NEW HOLLA **Comes with seat belt only. Seat belt must be engaged for machine operation.**			($265.00)
		761224	LAP BAR NEW HOLLAND **Lap Bar Installed from Factory.** **Seat belt included. Sensor moved from seat belt to the lap bar for machine operation (lap bar must be down to operate).**			No Charge

COUPLER

SD_K5101 COUPLERS

		726003	Manual Coupler			No Charge
		726004	Hydraulic Coupler			$1,051.00

BLOCK HEATER

SD_02086 BLOCK HEATER

		761048	Block Heater (120V)			No Charge

TURN SIGNALS

SD_06056 EXTERIOR LIGHTS

		463739	STEEL LIGHTS WITH TURN SIGNALS			No Charge

L218 T4 FINAL SKID STEER LOADER
US PRICE LIST

(Wichita, KS)

OPERATORS MANUAL

SD_32035 LANGUAGE OPTIONS

		761085	English			No Charge
		761088	French			No Charge
		761097	Spanish			No Charge

OPTIONAL PACKAGES

SD_01201 OPTION PACKAGES

		761034	Front Electric/Multi-Function **Contains Front Electric (Multi-Function) for Standard Auxiliaries**			No Charge
		761035	Performance w/Front Electric **Contains ON/OFF One-Way Self Leveling, Ride Control and Multi-Function Electric Control**			$1,173.00
		761036	High Flow Package **Contains High Flow Hydraulics with Multi-Function Electric Control**			$1,874.00
		761037	High Flow Plus Package **Contains Multi-Function, High Flow Hydraulics, ON/OFF One-way Self-Leveling and Glide Ride**			$3,047.00

TIRES

SD_16068 TIRE OPTIONS

		8501707	10x16.5 Heavy Duty (64 OTW) **STANDARD TIRE** **8PR Stamped Center**			No Charge
		8503107	12x16.5 Heavy Duty (70 OTW) **STANDARD TIRE** **10PR Stamped Center**			$345.00
		8503407	12x16.5 Severe Duty (70 OTW) **12PR Stamped Center**			$800.00
		8505607	10x16.5 TWEEL All Terrain			$3,000.00

FRONT ATTACHMENTS

BUCKETS

SD_K5231 BUCKETS

		XK5231X	No Bucket			No Charge
		Dirt & Foundry Bucket				
		761124	66" Dirt & Foundry Bucket **(1676 mm), 15.2 cu. ft. Heaped Capacity**			$879.00

L218 T4 FINAL SKID STEER LOADER
US PRICE LIST

(Wichita, KS)

		761125	72" Dirt & Foundry Bucket **(1829 mm), 16.7 cu. ft. Heaped Capacity**			$1,000.00
		761126	78" Dirt & Foundry Bucket **(1981 mm), 18.4 cu. ft. Heaped Capacity**			$1,038.00
Heavy Duty Dirt Bucket						
		761141	66" Heavy Duty Dirt Bucket **(1676 mm), 13.3 cu. ft. Heaped Capacity**			$1,134.00
		761142	72" Heavy Duty Dirt Bucket **(1829 mm), 14.6 cu. ft. Heaped Capacity**			$1,409.00
		761143	78" Heavy Duty Dirt Bucket **(1981 mm), 15.9 cu. ft. Heaped Capacity**			$1,538.00
Light Material Bucket						
		761136	72" Light Material Bucket **(1829 mm), 23.7 cu. ft. Heaped Capacity**			$841.00
		761137	84" Light Material Bucket **(2134 mm), 27.9 cu. ft. Heaped Capacity**			$981.00
Low Profile Bucket						
		761128	66" Low Profile Bucket **(1676 mm), 13.2 cu. ft. Heaped Capacity**			$827.00
		761129	72" Low Profile Bucket **(1829 mm), 14.5 cu. ft. Heaped Capacity**			$903.00
Low Profile Extended Bucket						
		761131	66" Low Profile Extended **(1676 mm), 15.5 cu. ft. Heaped Capacity**			$922.00
		761132	72" Low Profile Extended **(1829 mm), 17.1 cu. ft. Heaped Capacity**			$1,004.00
		761133	78" Low Profile Extended **(1981 mm), 18.6 cu. ft. Heaped Capacity**			$1,086.00
		761134	84" Low Profile Extended **(2134 mm), 20.2 cu. ft. Heaped Capacity**			$1,173.00
SmartFit Teeth						
		761254	72" HD Ext. w/ SmartFit Teeth **(1829 mm) 17.4 cu. ft. Heaped Capacity**			$1,692.00
		761255	78" HD Ext. w/ SmartFit Teeth **(1981 mm) 18.9 cu. ft. Heaped Capacity**			$1,898.00

BOLT ON CUTTING EDGE

SD_K6399 BOLT ON CUTTING EDGE

		XK6399X	No Bolt on Cutting Edge			No Charge
		761146	66" Bolt on Cutting Edge			$216.00
		761147	72" Bolt on Cutting Edge			$241.00
		761148	78" Bolt on Cutting Edge			$259.00
		761149	84" Bolt on Cutting Edge			$279.00

L218 T4 FINAL SKID STEER LOADER
US PRICE LIST

(Wichita, KS)

ADDITIONAL EQUIPMENT

SD_39021 REAR DOOR

		761075	Rear Door			No Charge
		761205	Heavy Duty Rear Door			$440.00

MOVE TO BIC

SPECIAL PAINT

SD_50103 SPECIAL PAINT

		X50103X	No Special Paint			No Charge
		726029	Special Paint **The price listed is for a color change only from the standard factory color: CNH #86572648 (NH-Yellow). All Special Color formulations will be applied using approved factory processes and materials. Metallic or other special formulations and/or materials are not available. A color chip must be provided to CNH for non CNH colors. A minimum lead time of 8 business weeks will be required prior to production.** **Unless specified, regular production decals will be applied. Requests can be made that decals not be applied. However, SAFETY decals MUST BE APPLIED in all cases. The following components remain CNH grey: lift & bucket cylinders, front coupler and attachments, ROPS, side screens, upper chassis, control links, rear door, and wheels.**			$2,999.00

TELEMATICS

SD_K6450 TELEMATICS

		XK6450X	No Telematics			No Charge
		761198	NH FleetForce On-board **Unit is factory fit with wiring and modem.** **To order the Service Subscription contact Service Parts.**			$816.00

L218 T4 FINAL SKID STEER LOADER
US PRICE LIST

(Wichita, KS)

Factory Supplied Attachments

Order Code			Description	Weight	Factory Data	List Price
Basic Attachments						
		735030006	Heavy Duty Rear Door Kit Install Time = 0.5 hours Rear door insert	32 LB		$308.00
		735006006	Beacon Kit Install Time = 0.2 hours	1 LB		$154.00
		735007006	4-Corner LED Strobe Kit Install Time = 0.5 hours Reference dependency matrix.	24 LB		$500.00
		735159116	Heater Complete Kit Install Time = 11.0 hours Reference dependency matrix.	141 LB		$1,373.00
		735158126	HVAC Complete Install Time = 26.2 hours	330 LB		$2,951.00
		735146016	Three Point Seat Belt Install Time = 1.0 hours	4 LB		$233.00
		735011006	Glass Front Door Kit Install Time = 2.0 hours Center mounted wiper. Requires three point seat belt. Reference dependency matrix.	182 LB		$1,543.00
		735012006	Demo Front Door Kit Install Time = 2.0 hours 1/2" polycarbonate door (will not shatter like glass). Center mounted wiper. Requires three point seat belt. Reference dependency matrix.	182 LB		$2,711.00
		735013006	Cab Side Windows Kit Install Time = 1.0 hours	139 LB		$865.00
		735016006	Radio Kit Install Time = 2.0 hours	16 LB		$413.00
		735150006	Open Cab Interior Trim Kit Install Time = 1.0 hours	25 LB		$372.00
		735021016	Multi-Function Front Electrical Mech Kit For EH and Mech machines Install Time = 2.0 hours Reference dependency matrix.	11 LB		$274.00
		735125016	Multi-Function Front Electrical E-H Kit For EH machines Install Time = 2.0 hours Reference dependency matrix.	11 LB		$274.00
		735022036	One Way Self Level Kit Install Time = 4.0 hours FOR L218 ONLY	15 LB		$485.00
		735023006	Ride Control Kit Install Time = 4.0 hours Reference dependency matrix.	33 LB		$481.00

L218 T4 FINAL SKID STEER LOADER
US PRICE LIST

(Wichita, KS)

		735024016	Hydraulic Coupler Kit Install Time = 8.0 hours Reference dependency matrix. For converting mechanical coupler to hydraulic coupler.	159 LB		$1,236.00
		735025086	High Flow Auxiliary Kit Install Time = 4.0 hours Reference dependency matrix. For use with Tier 4 models ONLY.	193 LB		$2,519.00
		735027006	Second Hydraulic Front Auxiliary Kit Install Time = 8.0 hours For use with Tier 3 or Tier 4 units Reference dependency matrix.	79 LB		$1,029.00
		735029016	Battery Disconnect Kit Install Time = 2.0 hours For use with Tier 3 units	2 LB		$151.00
		735036016	4-Point Lift Hook Kit Install Time = 1.0 hours	11 LB		$222.00
		735037036	Single Point Lift Hook Kit Install Time = 4.0 hours	276 LB		$1,029.00
		735038006	FOPS Level 2 Modification Kit Install Time = 1.0 hours	61 LB		$343.00
		735039056	Extra Counterweight Kit Install Time = 0.5 hours	202 LB		$412.00
		735040106	Aspirator (Precleaner) Kit Install Time = 2.0 hours For use with TIER 4 models ONLY.	13 LB		$317.00
		735042006	Interior Mirror Kit Install Time = 0.5 hours	4 LB		$58.00
		735045046	Foot Control Conversion Kit Install Time = 8.0 hours For use with Tier 4 models ONLY. Converting to Hand&Foot from Hand (H-Pattern). Not available for units equipped with Electro Hydraulic (EH) controls.	52 LB		$615.00
		735046046	Hand Control Conversion Kit Install Time = 6.0 hours For use with Tier 4 models ONLY. Converting to Hand (H-Pattern) from Hand&Foot. Not available for units equipped with Electro Hydraulic (EH) controls.	76 LB		$824.00
		735047016	120V Block Heater Kit Install Time = 0.5 hours	3 LB		$206.00
		735048016	220V Block Heater Kit Install Time = 0.5 hours	3 LB		$206.00
		735142006	Cylinder Guard Kit Install Time = 0.5 hours Provides protection to the loader bucket dump/curl cylinders in severe operating conditions.	21 LB		$739.00

NEW HOLLAND CONSTRUCTION

L218 T4 FINAL SKID STEER LOADER
US PRICE LIST

(Wichita, KS)

		735153006	High Beam Light Kit Install Time = 1.0 hours Two added front lights; mounted inward of the standard front lights. Adding this kit would yield: four front lights along with turn signals (if already equipped with signals). Reference image in SSL/CTL Brochure.	11 LB		$199.00
		735160006	Fender Extensions - Medium Frame Install Time = 1.5 hours	37 LB		$334.00
		735019106	KIT, TURN SIGNAL For Vertical Lift Models Plastic Lights	7 LB		$247.00
		735020156	KIT ROAD LIGHTS	32 LB		$608.00
		735161016	Heavy Duty Front Lights - Vertical Model Must order supporting bracket (84338448) and two (2)harnesses (84306340) from CNH Parts to complete kit.	26 LB		$372.00
		735163026	KIT, HEAVY DUTY REAR DOOR Rear Door	141 LB		$667.00
		735178016	Radiator Debris Kit Install Time = 2.0 hours To prevent large foreign material from damaging the radiator.	10 LB		$333.00
		735179006	Lap Bar Kit Install Time = 2.0 hours	40 LB		$600.00

Pallet Forks

		735075006	Pallet Fork Frame w/48" Tines	540 LB		$1,265.00

Dirt & Foundry Bucket

		735054016	66" Dirt & Foundry Bucket (1676 mm), 14.8 cu. ft. Heaped Capacity	374 LB		$881.00
		735055016	72" Dirt & Foundry Bucket (1829 mm), 16.2 cu. ft. Heaped Capacity	407 LB		$1,000.00
		735056016	78" Dirt & Foundry Bucket (1981 mm), 17.7 cu. ft. Heaped Capacity	429 LB		$1,038.00

Low Profile Bucket

		735058016	66" Low Profile Bucket (1676 mm), 13.4 cu. ft. Heaped Capacity	431 LB		$827.00
		735059016	72" Low Profile Bucket (1829 mm), 14.8 cu. ft. Heaped Capacity	471 LB		$903.00

Low Profile Extended Bucket

		735061016	66" Low Profile Extended Bucket (1676 mm), 15.9 cu. ft. Heaped Capacity	460 LB		$922.00
		735062016	72" Low Profile Extended Bucket (1829 mm), 17.7 cu. ft. Heaped Capacity	504 LB		$1,004.00
		735063016	78" Low Profile Extended Bucket (1981 mm), 19.1 cu. ft. Heaped Capacity	531 LB		$1,086.00
		735064016	84" Low Profile Extended Bucket (2134 mm), 20.5 cu. ft. Heaped Capacity	607 LB		$1,173.00

NEW HOLLAND CONSTRUCTION

L218 T4 FINAL SKID STEER LOADER
US PRICE LIST

(Wichita, KS)

Light Material Bucket

		735066016	72" Light Material Bucket (1829 mm), 23.3 cu. ft. Heaped Capacity	466 LB		$841.00
		735067016	84" Light Material Bucket (2134 mm), 27.5 cu. ft. Heaped Capacity	532 LB		$981.00

Manure Slurry Bucket

		735069016	72" Manure-Slurry Bucket (1829 mm), 19.1 cu. ft. Heaped Capacity	469 LB		$856.00
		735070016	84" Manure-Slurry Bucket (2134 mm), 22.6 cu. ft. Heaped Capacity	535 LB		$995.00

Heavy Duty Dirt Bucket

		735071016	66" Heavy Duty Dirt Bucket (1676 mm), 13.1 cu. ft. Heaped Capacity	449 LB		$1,134.00
		735072016	72" Heavy Duty Dirt Bucket (1829 mm), 14.1 cu. ft. Heaped Capacity	501 LB		$1,409.00
		735073016	78" Heavy Duty Dirt Bucket (1981 mm), 15.5 cu. ft. Heaped Capacity	526 LB		$1,538.00

SmartFit Teeth

		735184006	72" HDE Bucket w/ Teeth (1829 mm) 17.4 cu. ft. Heaped Capacity	624 LB		$1,692.00
		735185006	78" HDE Bucket w/ Teeth (1981 mm) 18.9 cu. ft. Heaped Capacity	697 LB		$1,898.00
		735186006	84" HDE Bucket w/ Teeth (2134 mm) 20.5 cu. ft. Heaped Capacity	728 LB		$2,032.00

Severe Duty Tire Assembly

		735097016	12x16.5 Severe Duty (70 OTW) RH Kit Galaxy Hulk Reference Loader Stop matrix. 1 tire assembly	168 LB		$645.00
		735117016	12x16.5 Severe Duty (70 OTW) LH Kit Galaxy Hulk Reference Loader Stop matrix. 1 tire assembly	168 LB		$645.00

Heavy Duty Tire Assembly

		735087006	RH10X16.5 HVY DUTY CA 64OTW Reference Loader Stop matrix. 1 tire assembly	117 LB		$330.00
		735094006	12x16.5 Heavy Duty (70 OTW) RH Kit Reference Loader Stop matrix. 1 tire assembly	141 LB		$417.00
		735108006	10x16.5 Heavy Duty (64 OTW) LH Kit Reference Loader Stop matrix. 1 tire assembly	117 LB		$330.00
		735114006	12x16.5 Heavy Duty (70 OTW) LH Kit Reference Loader Stop matrix. 1 tire assembly	141 LB		$417.00

L218 T4 FINAL SKID STEER LOADER
US PRICE LIST

(Wichita, KS)

Premium-Liner Tire Assembly

		735089006	10x16.5 Premium-Liner (64 OTW) RH Kit Galaxy Beefy Baby III Reference Loader Stop matrix. 1 tire assembly	90 LB		$610.00
		735110006	10x16.5 Premium-Liner (64 OTW) LH Kit Galaxy Beefy Baby III Reference Loader Stop matrix. 1 tire assembly	90 LB		$610.00

Tweels

		735180006	KIT RH 10X16.5 TWEEL 1 Tweel assembly - RH	178 LB		$750.00
		735181006	KIT LH 10X16.5 TWEEL 1 Tweel Assembly - LH	178 LB		$750.00

L220 T4 FINAL SKID STEER LOADER
US PRICE LIST

(Wichita, KS)

Standard Equipment

ENGINE:
- ISM 844LT water cooled diesel engine
- 134 CID (2.2 L) Turbo
- Tier 4 Final Certified
- High Pressure Common Rail (HPCR) Fuel Injection
- Horsepower:
  - Gross 67
  - Net 64
- 120 amp alternator
- Air cleaner - dual element
- Anti-freeze solution to -34º F
- Fuel tank - 19.5 gal. (U.S.)
- Diesel Oxidation Catalyst (DOC)
- Single Plane, Top and Bottom Oil Cooler/Radiator Configuration
- No maintenance belt
- Glow Plugs
- Maintenance free 925 CCA battery

OPERATOR'S PROTECTIVE STRUCTURE:
- ROPS/FOPS Level 1 canopy with side screens
- Control lockout system
- Tilt forward ROPS/FOPS
- Electric parking brake control
- Electronic Hand throttle
- Mechanical Foot Controls
- Operator's compartment floor cleanout
- Rear window with emergency escape
- Suspension Seat, vinyl with 2" retractable lap seat belt
- Dome Light
- 12V Power plug socket
- Cup holder and Tool Pocket
- Top window
- Headliner
- Alarm package (backup and horn)

OTHER STANDARD FEATURES:
- Lights - 2 front, 2 rear (halogen)
- Pre-wired for rotating beacon
- Service access hood, lockable
- Single point daily service
- Tail lights
- Remote Oil and Fuel Filters
- Steel Hoods and Rear Door
- Block Heater 120V - USA

INSTRUMENTATION:
- Advanced Instrument Cluster with Hour meter, fuel gauge, engine and oil temperature gauge, diagnostic features and security lock-out
- Warning lights with alarms:
  - Engine coolant temperature
  - Systems Critical Stop
  - Electronic System Indicator
  - Engine System Indicator
  - Hydraulic System Indicator
  - Hydraulic oil temperature
- Warning alarms:
  - Battery voltage (plus display)
- Indicator Light:
  - Engine preheat
  - Parking brake
  - Seat belt reminder

DRIVE:
- Manual controlled hydrostatic two-speed four wheel drive
- Spring applied hydraulic release (SAHR) disc parking brake
- Dynamic braking
- ASA #80 drive chain

L220 T4 FINAL SKID STEER LOADER
US PRICE LIST

(Wichita, KS)

Standard Equipment

HYDRAULICS:
- 6 micron oil filtration system
- 3 spool loader control valve
- Auxiliary hydraulics, Proportional thumb wheel activated: loader arm mounted with ISO specification flat face "connect-under-pressure" disconnects Including case drain
- Heavy duty hydraulic oil cooler
- Loader arm float position
- Auxiliary hydraulic function lockout override
- Loader arm circuit lockout override

LOADER:
- Mechanical attachment coupler
- Vertical Lift SUPERBOOM Geometry
- In-CAB Boom Lock
- SAE operating load: 2000 lbs.
- Tipping load: 4000 lbs.

TIRES:
- 12 x 16.5 Heavy Duty - 70 inch Over-the-Tire Width (OTW)

L220 T4 FINAL SKID STEER LOADER
US PRICE LIST

(Wichita, KS)

Models

COMMERCIAL MODEL	VERSION	MODEL	Weight	Factory Data	List Price
L220-T4B	Tier 4 B Regulated	L220	6,170 LB		$52,193.00

L220 T4 FINAL SKID STEER LOADER
US PRICE LIST

(Wichita, KS)

Factory Supplied Options

Order Code	Description	Weight	Factory Data	List Price

FAST PICK CONFIGURATION

SD_T9999 NEW HOLLAND CTL/SSL PACKAGES

		761609	761609 EH2-Basic-ROPS **E-H CONTROLS** **E-H CONTROL 2SPD** **FRONT ELEC/MULTI-FUNC** **REAR DOOR** **MANUAL COUPLER** **OPEN NO HEAT OR HVAC** **SUSPENSION SEAT** **STEEL LIGHTS W/ TS** **BLOCK HEATER 120V-USA** **LAP BAR**			($4,000.00)
		761611	761611 EH2-Plus-Cab **E-H CONTROLS** **E-H CONTROL 2SPD** **FRONT ELEC/MULTI-FUNC** **REAR DOOR** **HYDRAULIC COUPLER** **HVAC-GLASS DOOR** **SUSPENSION SEAT** **STEEL LIGHTS W/ TS** **BLOCK HEATER 120V-USA** **LAP BAR**			($4,000.00)
		761614	761614 EH2-Deluxe-Air Cab **E-H CONTROLS** **E-H CONTROL 2SPD** **FRONT ELEC/MULTI-FUNC** **REAR DOOR** **HYDRAULIC COUPLER** **HVAC-GLASS DOOR** **AIR SUSPENSION SEAT** **STEEL LIGHTS W/ TS** **BLOCK HEATER 120V-USA** **LAP BAR**			($4,000.00)

L220 T4 FINAL SKID STEER LOADER
US PRICE LIST

(Wichita, KS)

		761617	761617 FC2-Basic-ROPS **FOOT CONTROLS** **MECH CONTROL 2SPD** **FRONT ELEC/MULTI-FUNC** **REAR DOOR** **MANUAL COUPLER** **OPEN NO HEAT OR HVAC** **SUSPENSION SEAT** **STEEL LIGHTS W/ TS** **BLOCK HEATER 120V-USA** **LAP BAR**			($4,000.00)
		761619	761619 FC2-Plus-Cab **FOOT CONTROLS** **MECH CONTROL 2SPD** **FRONT ELEC/MULTI-FUNC** **REAR DOOR** **HYDRAULIC COUPLER** **HVAC-GLASS DOOR** **SUSPENSION SEAT** **STEEL LIGHTS W/ TS** **BLOCK HEATER 120V-USA** **LAP BAR**			($4,000.00)
		761622	761622 FC2-Deluxe-Air Cab **FOOT CONTROLS** **MECH CONTROL 2SPD** **FRONT ELEC/MULTI-FUNC** **REAR DOOR** **HYDRAULIC COUPLER** **HVAC-GLASS DOOR** **AIR SUSPENSION SEAT** **STEEL LIGHTS W/ TS** **BLOCK HEATER 120V-USA** **LAP BAR**			($4,000.00)
		761625	761625 FC2-Elite-Air Cab **FOOT CONTROLS** **MECH CONTROL 2SPD** **PERF w/FRONT ELEC MULTI FUNCTION CONTROL, SELF LEVEL, AND** **RIDE CONTROL** **REAR DOOR** **HYDRAULIC COUPLER** **HVAC-GLASS DOOR** **AIR SUSPENSION SEAT** **STEEL LIGHTS W/ TS** **BLOCK HEATER 120V-USA** **LAP BAR**			($4,000.00)

L220 T4 FINAL SKID STEER LOADER
US PRICE LIST

(Wichita, KS)

		761627	761627 EH2-Limited-Air Cab **E-H CONTROLS** **E-H CONTROL 2SPD** **HIGH FLOW w. MULTIFUNCTION FRONT ELEC** **HEAVY DUTY REAR DOOR** **HYDRAULIC COUPLER** **HVAC-GLASS DOOR** **AIR SUSPENSION SEAT** **STEEL LIGHTS W/ TS** **BLOCK HEATER 120V-USA** **LAP BAR**			($4,000.00)
		761629	761629 FC2-Platinum-ROPS **FOOT CONTROLS** **MECH CONTROL 2SPD** **HIGH FLOW w/ MULTI FUNCTION FRONT ELEC** **HEAVY DUTY REAR DOOR** **HYDRAULIC COUPLER** **OPEN NO HEAT OR HVAC** **SUSPENSION SEAT** **STEEL LIGHTS W/ TS** **BLOCK HEATER 120V-USA** **LAP BAR**			($4,000.00)
		761630	761630 FC2-Limited-Air Cab **FOOT CONTROLS** **MECH CONTROL 2SPD** **HIGH FLOW PLUS w/ MULTI FUNCTION FRONT ELEC, SELF LEVEL,** **RIDE CONTROL** **HEAVY DUTY REAR DOOR** **HYDRAULIC COUPLER** **HVAC-GLASS DOOR** **AIR SUSPENSION SEAT** **STEEL LIGHTS W/ TS** **BLOCK HEATER 120V-USA** **LAP BAR**			($4,000.00)

CONTROLS AND TRANSMISSION

SD_01100 CONTROLS LEVEL

		761029	2 Speed Mechanical Controls **Available in "H Pattern" Hand Controls or Hand and Foot Controls**			No Charge
		761031	2 Speed E-H Controls **Electro-Hydraulic Switchable (ISO-H Pattern) Controls with** **Two Speed (includes arm rests and foot throttle)**			$2,095.00

L220 T4 FINAL SKID STEER LOADER
US PRICE LIST

(Wichita, KS)

SD_01401 DRIVE CONTROL TYPE

		761040	Hand Controls **H Pattern, ONLY Select with Mechanical Controls (761028 or 761029)**			No Charge
		761041	Hand and Foot Controls **ONLY Select with Mechanical Controls (761028 or 761029)**			No Charge
		761042	E-H Controls **ONLY Select with E-H Controls (761030 or 761031)**			No Charge

ROPS/CAB

SD_05009 CAB

		761043	Open Cab (No Heat or HVAC) **with top window and keyed start**			No Charge
		761045	Enclosed Cab with HVAC **Includes side windows, front glass door with wiper, shoulder belt, radio with speakers and keyless start**			$5,664.00
		761183	Enclosed Cab w/HVAC -Demo Door **Includes side windows, 1/2" polycarbonate (will not shatter like glass), front door with wiper, shoulder belt, radio with speakers, and keyless start.**			$7,445.00

SD_05016 OPEN CAB TRIM

		X05016X	No Open Cab Interior Trim Pkg			No Charge
		761186	Open Cab Interior Trim Package **For use with Open Cab. Covers interior sides and rear.**			$310.00

SD_05185 CAB SEAT

		761052	Suspension Seat (Vinyl)			No Charge
		761062	Air Ride Suspension Seat **(Fabric) with temperature control (may not be ordered with Open Cab option 761043).**			$582.00

SD_K5104 LAP BAR-NH

		XK5104X	NO LAP BAR NEW HOLLA **Comes with seat belt only. Seat belt must be engaged for machine operation.**			($265.00)
		761224	LAP BAR NEW HOLLAND **Lap Bar Installed from Factory.** **Seat belt included. Sensor moved from seat belt to the lap bar for machine operation (lap bar must be down to operate).**			No Charge

L220 T4 FINAL SKID STEER LOADER
US PRICE LIST

(Wichita, KS)

COUPLER

SD_K5101 COUPLERS

		726003	Manual Coupler			No Charge
		726004	Hydraulic Coupler			$1,051.00

BLOCK HEATER

SD_02086 BLOCK HEATER

		761048	Block Heater (120V)			No Charge

TURN SIGNALS

SD_06056 EXTERIOR LIGHTS

		463739	STEEL LIGHTS WITH TURN SIGNALS			No Charge

OPERATORS MANUAL

SD_32035 LANGUAGE OPTIONS

		761085	English			No Charge
		761088	French			No Charge
		761097	Spanish			No Charge

OPTIONAL PACKAGES

SD_01201 OPTION PACKAGES

		761034	Front Electric/Multi-Function **Contains Front Electric (Multi-Function) for Standard Auxiliaries**			No Charge
		761035	Performance w/Front Electric **Contains ON/OFF One-Way Self Leveling, Ride Control and Multi-Function Electric Control**			$1,173.00
		761036	High Flow Package **Contains High Flow Hydraulics with Multi-Function Electric Control**			$1,874.00
		761037	High Flow Plus Package **Contains Multi-Function, High Flow Hydraulics, ON/OFF One-way Self-Leveling and Glide Ride**			$3,047.00

L220 T4 FINAL SKID STEER LOADER
US PRICE LIST

(Wichita, KS)

TIRES

SD_16068 TIRE OPTIONS

		8501707	10x16.5 Heavy Duty (64 OTW) **STANDARD TIRE** **8PR Stamped Center**			($345.00)
		8503107	12x16.5 Heavy Duty (70 OTW) **STANDARD TIRE** **10PR Stamped Center**			No Charge
		8503407	12x16.5 Severe Duty (70 OTW) **12PR Stamped Center**			$800.00
		8505607	10x16.5 TWEEL All Terrain			$3,000.00

FRONT ATTACHMENTS

BUCKETS

SD_K5231 BUCKETS

		XK5231X	No Bucket			No Charge
		Dirt & Foundry Bucket				
		761124	66" Dirt & Foundry Bucket **(1676 mm), 15.2 cu. ft. Heaped Capacity**			$879.00
		761125	72" Dirt & Foundry Bucket **(1829 mm), 16.7 cu. ft. Heaped Capacity**			$1,000.00
		761126	78" Dirt & Foundry Bucket **(1981 mm), 18.4 cu. ft. Heaped Capacity**			$1,038.00
		Heavy Duty Dirt Bucket				
		761141	66" Heavy Duty Dirt Bucket **(1676 mm), 13.3 cu. ft. Heaped Capacity**			$1,134.00
		761142	72" Heavy Duty Dirt Bucket **(1829 mm), 14.6 cu. ft. Heaped Capacity**			$1,409.00
		761143	78" Heavy Duty Dirt Bucket **(1981 mm), 15.9 cu. ft. Heaped Capacity**			$1,538.00
		Light Material Bucket				
		761136	72" Light Material Bucket **(1829 mm), 23.7 cu. ft. Heaped Capacity**			$841.00
		761137	84" Light Material Bucket **(2134 mm), 27.9 cu. ft. Heaped Capacity**			$981.00
		Low Profile Bucket				
		761128	66" Low Profile Bucket **(1676 mm), 13.2 cu. ft. Heaped Capacity**			$827.00
		761129	72" Low Profile Bucket **(1829 mm), 14.5 cu. ft. Heaped Capacity**			$903.00

L220 T4 FINAL SKID STEER LOADER
US PRICE LIST

(Wichita, KS)

Low Profile Extended Bucket						
		761131	66" Low Profile Extended **(1676 mm), 15.5 cu. ft. Heaped Capacity**			$922.00
		761132	72" Low Profile Extended **(1829 mm), 17.1 cu. ft. Heaped Capacity**			$1,004.00
		761133	78" Low Profile Extended **(1981 mm), 18.6 cu. ft. Heaped Capacity**			$1,086.00
		761134	84" Low Profile Extended **(2134 mm), 20.2 cu. ft. Heaped Capacity**			$1,173.00
SmartFit Teeth						
		761254	72" HD Ext. w/ SmartFit Teeth **(1829 mm) 17.4 cu. ft. Heaped Capacity**			$1,692.00
		761255	78" HD Ext. w/ SmartFit Teeth **(1981 mm) 18.9 cu. ft. Heaped Capacity**			$1,898.00

BOLT ON CUTTING EDGE

SD_K6399 BOLT ON CUTTING EDGE

		XK6399X	No Bolt on Cutting Edge			No Charge
		761146	66" Bolt on Cutting Edge			$216.00
		761147	72" Bolt on Cutting Edge			$241.00
		761148	78" Bolt on Cutting Edge			$259.00
		761149	84" Bolt on Cutting Edge			$279.00

ADDITIONAL EQUIPMENT

SD_39021 REAR DOOR

		761075	Rear Door			No Charge
		761205	Heavy Duty Rear Door			$440.00

MOVE TO BIC

SPECIAL PAINT

SD_50103 SPECIAL PAINT

		X50103X	No Special Paint			No Charge

L220 T4 FINAL SKID STEER LOADER
US PRICE LIST

(Wichita, KS)

		726029	Special Paint **The price listed is for a color change only from the standard factory color: CNH #86572648 (NH-Yellow). All Special Color formulations will be applied using approved factory processes and materials. Metallic or other special formulations and/or materials are not available. A color chip must be provided to CNH for non CNH colors. A minimum lead time of 8 business weeks will be required prior to production.** **Unless specified, regular production decals will be applied. Requests can be made that decals not be applied. However, SAFETY decals MUST BE APPLIED in all cases. The following components remain CNH grey: lift & bucket cylinders, front coupler and attachments, ROPS, side screens, upper chassis, control links, rear door, and wheels.**			$2,999.00

TELEMATICS

SD_K6450 TELEMATICS

		XK6450X	No Telematics			No Charge
		761198	NH FleetForce On-board **Unit is factory fit with wiring and modem.** **To order the Service Subscription contact Service Parts.**			$816.00

L220 T4 FINAL SKID STEER LOADER
US PRICE LIST

(Wichita, KS)

Factory Supplied Attachments

Order Code			Description	Weight	Factory Data	List Price
Basic Attachments						
		735030006	Heavy Duty Rear Door Kit Install Time = 0.5 hours Rear door insert	32 LB		$308.00
		735006006	Beacon Kit Install Time = 0.2 hours	1 LB		$154.00
		735007006	4-Corner LED Strobe Kit Install Time = 0.5 hours Reference dependency matrix.	24 LB		$500.00
		735159116	Heater Complete Kit Install Time = 11.0 hours Reference dependency matrix.	141 LB		$1,373.00
		735158126	HVAC Complete Install Time = 26.2 hours	330 LB		$2,951.00
		735146016	Three Point Seat Belt Install Time = 1.0 hours	4 LB		$233.00
		735011006	Glass Front Door Kit Install Time = 2.0 hours Center mounted wiper. Requires three point seat belt. Reference dependency matrix.	182 LB		$1,543.00
		735012006	Demo Front Door Kit Install Time = 2.0 hours 1/2" polycarbonate door (will not shatter like glass). Center mounted wiper. Requires three point seat belt. Reference dependency matrix.	182 LB		$2,711.00
		735013006	Cab Side Windows Kit Install Time = 1.0 hours	139 LB		$865.00
		735016006	Radio Kit Install Time = 2.0 hours	16 LB		$413.00
		735150006	Open Cab Interior Trim Kit Install Time = 1.0 hours	25 LB		$372.00
		735021016	Multi-Function Front Electrical Mech Kit For EH and Mech machines Install Time = 2.0 hours Reference dependency matrix.	11 LB		$274.00
		735125016	Multi-Function Front Electrical E-H Kit For EH machines Install Time = 2.0 hours Reference dependency matrix.	11 LB		$274.00
		735022056	One Way Self Level Kit Install Time = 4.0 hours FOR L220 ONLY	14 LB		$485.00
		735023006	Ride Control Kit Install Time = 4.0 hours Reference dependency matrix.	33 LB		$481.00

L220 T4 FINAL SKID STEER LOADER
US PRICE LIST

(Wichita, KS)

		735024016	Hydraulic Coupler Kit Install Time = 8.0 hours Reference dependency matrix. For converting mechanical coupler to hydraulic coupler.	159 LB		$1,236.00
		735025086	High Flow Auxiliary Kit Install Time = 4.0 hours Reference dependency matrix. For use with Tier 4 models ONLY.	193 LB		$2,519.00
		735027006	Second Hydraulic Front Auxiliary Kit Install Time = 8.0 hours For use with Tier 3 or Tier 4 units Reference dependency matrix.	79 LB		$1,029.00
		735029016	Battery Disconnect Kit Install Time = 2.0 hours For use with Tier 3 units	2 LB		$151.00
		735036016	4-Point Lift Hook Kit Install Time = 1.0 hours	11 LB		$222.00
		735037036	Single Point Lift Hook Kit Install Time = 4.0 hours	276 LB		$1,029.00
		735038006	FOPS Level 2 Modification Kit Install Time = 1.0 hours	61 LB		$343.00
		735039056	Extra Counterweight Kit Install Time = 0.5 hours	202 LB		$412.00
		735040106	Aspirator (Precleaner) Kit Install Time = 2.0 hours For use with TIER 4 models ONLY.	13 LB		$317.00
		735042006	Interior Mirror Kit Install Time = 0.5 hours	4 LB		$58.00
		735045046	Foot Control Conversion Kit Install Time = 8.0 hours For use with Tier 4 models ONLY. Converting to Hand&Foot from Hand (H-Pattern). Not available for units equipped with Electro Hydraulic (EH) controls.	52 LB		$615.00
		735046046	Hand Control Conversion Kit Install Time = 6.0 hours For use with Tier 4 models ONLY. Converting to Hand (H-Pattern) from Hand&Foot. Not available for units equipped with Electro Hydraulic (EH) controls.	76 LB		$824.00
		735047016	120V Block Heater Kit Install Time = 0.5 hours	3 LB		$206.00
		735048016	220V Block Heater Kit Install Time = 0.5 hours	3 LB		$206.00
		735142006	Cylinder Guard Kit Install Time = 0.5 hours Provides protection to the loader bucket dump/curl cylinders in severe operating conditions.	21 LB		$739.00

NEW HOLLAND CONSTRUCTION

L220 T4 FINAL SKID STEER LOADER
US PRICE LIST

(Wichita, KS)

		735153006	High Beam Light Kit Install Time = 1.0 hours Two added front lights; mounted inward of the standard front lights. Adding this kit would yield: four front lights along with turn signals (if already equipped with signals). Reference image in SSL/CTL Brochure.	11 LB		$199.00
		735160006	Fender Extensions - Medium Frame Install Time = 1.5 hours	37 LB		$334.00
		735019106	KIT, TURN SIGNAL For Vertical Lift Models Plastic Lights	7 LB		$247.00
		735020156	KIT ROAD LIGHTS	32 LB		$608.00
		735161016	Heavy Duty Front Lights - Vertical Model Must order supporting bracket (84338448) and two (2)harnesses (84306340) from CNH Parts to complete kit.	26 LB		$372.00
		735163026	KIT, HEAVY DUTY REAR DOOR Rear Door	141 LB		$667.00
		735178016	Radiator Debris Kit Install Time = 2.0 hours To prevent large foreign material from damaging the radiator.	10 LB		$333.00
		735179006	Lap Bar Kit Install Time = 2.0 hours	40 LB		$600.00

Pallet Forks

		735075006	Pallet Fork Frame w/48" Tines	540 LB		$1,265.00

Dirt & Foundry Bucket

		735054016	66" Dirt & Foundry Bucket (1676 mm), 14.8 cu. ft. Heaped Capacity	374 LB		$881.00
		735055016	72" Dirt & Foundry Bucket (1829 mm), 16.2 cu. ft. Heaped Capacity	407 LB		$1,000.00
		735056016	78" Dirt & Foundry Bucket (1981 mm), 17.7 cu. ft. Heaped Capacity	429 LB		$1,038.00

Low Profile Bucket

		735058016	66" Low Profile Bucket (1676 mm), 13.4 cu. ft. Heaped Capacity	431 LB		$827.00
		735059016	72" Low Profile Bucket (1829 mm), 14.8 cu. ft. Heaped Capacity	471 LB		$903.00

Low Profile Extended Bucket

		735061016	66" Low Profile Extended Bucket (1676 mm), 15.9 cu. ft. Heaped Capacity	460 LB		$922.00
		735062016	72" Low Profile Extended Bucket (1829 mm), 17.7 cu. ft. Heaped Capacity	504 LB		$1,004.00
		735063016	78" Low Profile Extended Bucket (1981 mm), 19.1 cu. ft. Heaped Capacity	531 LB		$1,086.00
		735064016	84" Low Profile Extended Bucket (2134 mm), 20.5 cu. ft. Heaped Capacity	607 LB		$1,173.00

NEW HOLLAND CONSTRUCTION

L220 T4 FINAL SKID STEER LOADER
US PRICE LIST

(Wichita, KS)

Light Material Bucket

		735066016	72" Light Material Bucket (1829 mm), 23.3 cu. ft. Heaped Capacity	466 LB		$841.00
		735067016	84" Light Material Bucket (2134 mm), 27.5 cu. ft. Heaped Capacity	532 LB		$981.00

Manure Slurry Bucket

		735069016	72" Manure-Slurry Bucket (1829 mm), 19.1 cu. ft. Heaped Capacity	469 LB		$856.00
		735070016	84" Manure-Slurry Bucket (2134 mm), 22.6 cu. ft. Heaped Capacity	535 LB		$995.00

Heavy Duty Dirt Bucket

		735071016	66" Heavy Duty Dirt Bucket (1676 mm), 13.1 cu. ft. Heaped Capacity	449 LB		$1,134.00
		735072016	72" Heavy Duty Dirt Bucket (1829 mm), 14.1 cu. ft. Heaped Capacity	501 LB		$1,409.00
		735073016	78" Heavy Duty Dirt Bucket (1981 mm), 15.5 cu. ft. Heaped Capacity	526 LB		$1,538.00

SmartFit Teeth

		735184006	72" HDE Bucket w/ Teeth (1829 mm) 17.4 cu. ft. Heaped Capacity	624 LB		$1,692.00
		735185006	78" HDE Bucket w/ Teeth (1981 mm) 18.9 cu. ft. Heaped Capacity	697 LB		$1,898.00
		735186006	84" HDE Bucket w/ Teeth (2134 mm) 20.5 cu. ft. Heaped Capacity	728 LB		$2,032.00

Severe Duty Tire Assembly

		735097016	12x16.5 Severe Duty (70 OTW) RH Kit Galaxy Hulk Reference Loader Stop matrix. 1 tire assembly	168 LB		$645.00
		735117016	12x16.5 Severe Duty (70 OTW) LH Kit Galaxy Hulk Reference Loader Stop matrix. 1 tire assembly	168 LB		$645.00

Heavy Duty Tire Assembly

		735087006	RH10X16.5 HVY DUTY CA 64OTW Reference Loader Stop matrix. 1 tire assembly	117 LB		$330.00
		735094006	12x16.5 Heavy Duty (70 OTW) RH Kit Reference Loader Stop matrix. 1 tire assembly	141 LB		$417.00
		735108006	10x16.5 Heavy Duty (64 OTW) LH Kit Reference Loader Stop matrix. 1 tire assembly	117 LB		$330.00
		735114006	12x16.5 Heavy Duty (70 OTW) LH Kit Reference Loader Stop matrix. 1 tire assembly	141 LB		$417.00

L220 T4 FINAL SKID STEER LOADER
US PRICE LIST

(Wichita, KS)

Premium-Liner Tire Assembly

		735089006	10x16.5 Premium-Liner (64 OTW) RH Kit Galaxy Beefy Baby III Reference Loader Stop matrix. 1 tire assembly	90 LB		$610.00
		735110006	10x16.5 Premium-Liner (64 OTW) LH Kit Galaxy Beefy Baby III Reference Loader Stop matrix. 1 tire assembly	90 LB		$610.00

Tweels

		735180006	KIT RH 10X16.5 TWEEL 1 Tweel assembly - RH	178 LB		$750.00
		735181006	KIT LH 10X16.5 TWEEL 1 Tweel Assembly - LH	178 LB		$750.00

L221 T4 FINAL SKID STEER LOADER
US PRICE LIST

(Wichita, KS)

Standard Equipment

ENGINE:
- FPT F5H FL463A water cooled diesel engine
- 207 CID (3.4 L) Turbo
- Tier 4 Final Certified
- High Pressure Common Rail (HPCR) Fuel Injection
- Horsepower:
  - Gross 74
  - Net 68
  - Peak torque 203 lb·ft (275 N·m)
- 120 amp alternator
- Air cleaner - dual element
- Anti-freeze solution to -34° F
- Fuel tank - 19.5 gal. (U.S.)
- Particulate Matter Catalyst (PMCat)
- Single Plane, Top and Bottom Oil Cooler/Radiator Configuration
- No maintenance belt
- Glow Plugs

OPERATOR'S PROTECTIVE STRUCTURE:
- ROPS/FOPS Level 1 canopy with side screens
- Control lockout system
- Tilt forward ROPS/FOPS
- Electric parking brake control
- Hand throttle
- Mechanical Foot Controls for loader with low effort hand controls for steering
- Operator's compartment floor cleanout
- Rear window with emergency escape
- Suspension Seat with 2" retractable lap seat belt
- Dome Light
- 12V Power plug socket
- Cup holder
- Tool Pocket

OPERATOR'S PROTECTIVE STRUCTURE (continued):
- Top window
- Headliner
- Alarm package (backup and horn)

OTHER STANDARD FEATURES:
- Lights - 2 front, 2 rear flood (halogen)
- Pre-wired for rotating beacon
- Service access hood, lockable
- Steel Hoods & Covers
- Single point daily service
- Tail lights
- Remote Oil and Fuel Filters
- Block Heater 120V - USA

INSTRUMENTATION:
- Advanced Instrument Cluster with Hour meter, fuel guage, engine and oil temperature gauge, diagnostic features and security lock-out
- Warning lights with alarms:
  - Engine coolant temperature
  - Systems Critical Stop
  - Electronic System Indicator
  - Engine System Indicator
  - Hydraulic System Indicator
  - Hydraulic oil temperature
- Warning alarms:
  - Battery voltage (plus display)
- Indicator Light:
  - Engine preheat
  - Parking brake
  - Seat belt reminder

DRIVE:
- Servo assist controlled hydrostatic four wheel drive
- Spring applied hydraulic release (SAHR) disc parking brake
- Dynamic braking
- ASA #100 drive chain

HYDRAULICS:
- 6 micron oil filtration system

L221 T4 FINAL SKID STEER LOADER
US PRICE LIST

(Wichita, KS)

Standard Equipment

3 spool loader control valve
Auxiliary hydraulics, Proportional
  thumb wheel activated: loader arm
  mounted with ISO specification flat
  face "connect-under-pressure"
  disconnects
  Including case drain
Heavy duty hydraulic oil cooler
Loader arm float position
Auxiliary hydraulic function lockout
  override
Loader arm circuit lockout override

LOADER:
  Mechanical attachment coupler
  Radial arm geometry
  Loader lift arm support strut
  SAE operating load: 2100 lbs.
  Tipping load: 4200 lbs.

TIRES
  12 X 16.5 Heavy Duty - 70 inch
  Over-the-Tire Width (OTW)

L221 T4 FINAL SKID STEER LOADER
US PRICE LIST

(Wichita, KS)

Models

COMMERCIAL MODEL	VERSION	MODEL	Weight	Factory Data	List Price
L221-T4B	Tier 4 B Regulated	L221	6,670 LB		$53,252.00

L221 T4 FINAL SKID STEER LOADER
US PRICE LIST

(Wichita, KS)

Factory Supplied Options

Order Code	Description	Weight	Factory Data	List Price

FAST PICK CONFIGURATION

SD_T9999 NEW HOLLAND CTL/SSL PACKAGES

		761609	761609 EH2-Basic-ROPS **E-H CONTROLS** **E-H CONTROL 2SPD** **FRONT ELEC/MULTI-FUNC** **REAR DOOR** **MANUAL COUPLER** **OPEN NO HEAT OR HVAC** **SUSPENSION SEAT** **STEEL LIGHTS W/ TS** **BLOCK HEATER 120V-USA** **LAP BAR**			($4,000.00)
		761611	761611 EH2-Plus-Cab **E-H CONTROLS** **E-H CONTROL 2SPD** **FRONT ELEC/MULTI-FUNC** **REAR DOOR** **HYDRAULIC COUPLER** **HVAC-GLASS DOOR** **SUSPENSION SEAT** **STEEL LIGHTS W/ TS** **BLOCK HEATER 120V-USA** **LAP BAR**			($4,000.00)
		761614	761614 EH2-Deluxe-Air Cab **E-H CONTROLS** **E-H CONTROL 2SPD** **FRONT ELEC/MULTI-FUNC** **REAR DOOR** **HYDRAULIC COUPLER** **HVAC-GLASS DOOR** **AIR SUSPENSION SEAT** **STEEL LIGHTS W/ TS** **BLOCK HEATER 120V-USA** **LAP BAR**			($4,000.00)

L221 T4 FINAL SKID STEER LOADER
US PRICE LIST

(Wichita, KS)

		761617	761617 FC2-Basic-ROPS **FOOT CONTROLS** **MECH CONTROL 2SPD** **FRONT ELEC/MULTI-FUNC** **REAR DOOR** **MANUAL COUPLER** **OPEN NO HEAT OR HVAC** **SUSPENSION SEAT** **STEEL LIGHTS W/ TS** **BLOCK HEATER 120V-USA** **LAP BAR**			($4,000.00)
		761619	761619 FC2-Plus-Cab **FOOT CONTROLS** **MECH CONTROL 2SPD** **FRONT ELEC/MULTI-FUNC** **REAR DOOR** **HYDRAULIC COUPLER** **HVAC-GLASS DOOR** **SUSPENSION SEAT** **STEEL LIGHTS W/ TS** **BLOCK HEATER 120V-USA** **LAP BAR**			($4,000.00)
		761622	761622 FC2-Deluxe-Air Cab **FOOT CONTROLS** **MECH CONTROL 2SPD** **FRONT ELEC/MULTI-FUNC** **REAR DOOR** **HYDRAULIC COUPLER** **HVAC-GLASS DOOR** **AIR SUSPENSION SEAT** **STEEL LIGHTS W/ TS** **BLOCK HEATER 120V-USA** **LAP BAR**			($4,000.00)
		761627	761627 EH2-Limited-Air Cab **E-H CONTROLS** **E-H CONTROL 2SPD** **HIGH FLOW w. MULTIFUNCTION FRONT ELEC** **HEAVY DUTY REAR DOOR** **HYDRAULIC COUPLER** **HVAC-GLASS DOOR** **AIR SUSPENSION SEAT** **STEEL LIGHTS W/ TS** **BLOCK HEATER 120V-USA** **LAP BAR**			($4,000.00)

L221 T4 FINAL SKID STEER LOADER
US PRICE LIST

(Wichita, KS)

CONTROLS AND TRANSMISSION

SD_01100 CONTROLS LEVEL

		761029	2 Speed Mechanical Controls **Available in "H Pattern" Hand Controls or Hand and Foot Controls**			No Charge
		761031	2 Speed E-H Controls **Electro-Hydraulic Switchable (ISO-H Pattern) Controls with Two Speed (includes arm rests and foot throttle)**			$2,095.00

SD_01401 DRIVE CONTROL TYPE

		761040	Hand Controls **H Pattern, ONLY Select with Mechanical Controls (761028 or 761029)**			No Charge
		761041	Hand and Foot Controls **ONLY Select with Mechanical Controls (761028 or 761029)**			No Charge
		761042	E-H Controls **ONLY Select with E-H Controls (761030 or 761031)**			No Charge

ROPS/CAB

SD_05009 CAB

		761043	Open Cab (No Heat or HVAC) **with top window and keyed start**			No Charge
		761045	Enclosed Cab with HVAC **Includes side windows, front glass door with wiper, shoulder belt, radio with speakers and keyless start**			$5,664.00
		761183	Enclosed Cab w/HVAC -Demo Door **Includes side windows, 1/2" polycarbonate (will not shatter like glass), front door with wiper, shoulder belt, radio with speakers, and keyless start.**			$7,445.00

SD_05016 OPEN CAB TRIM

		X05016X	No Open Cab Interior Trim Pkg			No Charge
		761186	Open Cab Interior Trim Package **For use with Open Cab. Covers interior sides and rear.**			$310.00

SD_05185 CAB SEAT

		761052	Suspension Seat (Vinyl)			No Charge
		761062	Air Ride Suspension Seat **(Fabric) with temperature control (may not be ordered with Open Cab option 761043).**			$582.00

L221 T4 FINAL SKID STEER LOADER
US PRICE LIST

(Wichita, KS)

SD_K5104 LAP BAR-NH

		XK5104X	NO LAP BAR NEW HOLLA **Comes with seat belt only. Seat belt must be engaged for machine operation.**			($265.00)
		761224	LAP BAR NEW HOLLAND **Lap Bar Installed from Factory.** **Seat belt included. Sensor moved from seat belt to the lap bar for machine operation (lap bar must be down to operate).**			No Charge

COUPLER

SD_K5101 COUPLERS

		726003	Manual Coupler			No Charge
		726004	Hydraulic Coupler			$1,051.00

BLOCK HEATER

SD_02086 BLOCK HEATER

		761048	Block Heater (120V)			No Charge

TURN SIGNALS

SD_06056 EXTERIOR LIGHTS

		463739	STEEL LIGHTS WITH TURN SIGNALS			No Charge

OPERATORS MANUAL

SD_32035 LANGUAGE OPTIONS

		761085	English			No Charge
		761088	French			No Charge
		761097	Spanish			No Charge

OPTIONAL PACKAGES

SD_01201 OPTION PACKAGES

		761034	Front Electric/Multi-Function **Contains Front Electric (Multi-Function) for Standard Auxiliaries**			No Charge

L221 T4 FINAL SKID STEER LOADER
US PRICE LIST

(Wichita, KS)

		761035	Performance w/Front Electric **Contains ON/OFF One-Way Self Leveling, Ride Control and Multi-Function Electric Control**			$1,173.00
		761036	High Flow Package **Contains High Flow Hydraulics with Multi-Function Electric Control**			$1,874.00
		761037	High Flow Plus Package **Contains Multi-Function, High Flow Hydraulics, ON/OFF One-way Self-Leveling and Glide Ride**			$3,047.00

TIRES

SD_16068 TIRE OPTIONS

		8501707	10x16.5 Heavy Duty (64 OTW) **STANDARD TIRE** **8PR Stamped Center**			No Charge
		8503107	12x16.5 Heavy Duty (70 OTW) **STANDARD TIRE** **10PR Stamped Center**			No Charge
		8503407	12x16.5 Severe Duty (70 OTW) **12PR Stamped Center**			$800.00
		8505607	10x16.5 TWEEL All Terrain			$3,000.00
		8505707	12x16.5 TWEEL All Terrain			$3,400.00

FRONT ATTACHMENTS

BUCKETS

SD_K5231 BUCKETS

		XK5231X	No Bucket			No Charge
Dirt & Foundry Bucket						
		761124	66" Dirt & Foundry Bucket **(1676 mm), 15.2 cu. ft. Heaped Capacity**			$879.00
		761125	72" Dirt & Foundry Bucket **(1829 mm), 16.7 cu. ft. Heaped Capacity**			$1,000.00
		761126	78" Dirt & Foundry Bucket **(1981 mm), 18.4 cu. ft. Heaped Capacity**			$1,038.00
Heavy Duty Dirt Bucket						
		761141	66" Heavy Duty Dirt Bucket **(1676 mm), 13.3 cu. ft. Heaped Capacity**			$1,134.00
		761142	72" Heavy Duty Dirt Bucket **(1829 mm), 14.6 cu. ft. Heaped Capacity**			$1,409.00
		761143	78" Heavy Duty Dirt Bucket **(1981 mm), 15.9 cu. ft. Heaped Capacity**			$1,538.00
Light Material Bucket						
		761136	72" Light Material Bucket **(1829 mm), 23.7 cu. ft. Heaped Capacity**			$841.00

L221 T4 FINAL SKID STEER LOADER
US PRICE LIST

(Wichita, KS)

		761137	84" Light Material Bucket **(2134 mm), 27.9 cu. ft. Heaped Capacity**			$981.00
Low Profile Bucket						
		761128	66" Low Profile Bucket **(1676 mm), 13.2 cu. ft. Heaped Capacity**			$827.00
		761129	72" Low Profile Bucket **(1829 mm), 14.5 cu. ft. Heaped Capacity**			$903.00
Low Profile Extended Bucket						
		761131	66" Low Profile Extended **(1676 mm), 15.5 cu. ft. Heaped Capacity**			$922.00
		761132	72" Low Profile Extended **(1829 mm), 17.1 cu. ft. Heaped Capacity**			$1,004.00
		761133	78" Low Profile Extended **(1981 mm), 18.6 cu. ft. Heaped Capacity**			$1,086.00
		761134	84" Low Profile Extended **(2134 mm), 20.2 cu. ft. Heaped Capacity**			$1,173.00
SmartFit Teeth						
		761254	72" HD Ext. w/ SmartFit Teeth **(1829 mm) 17.4 cu. ft. Heaped Capacity**			$1,692.00
		761255	78" HD Ext. w/ SmartFit Teeth **(1981 mm) 18.9 cu. ft. Heaped Capacity**			$1,898.00

BOLT ON CUTTING EDGE

SD_K6399 BOLT ON CUTTING EDGE

		XK6399X	No Bolt on Cutting Edge			No Charge
		761146	66" Bolt on Cutting Edge			$216.00
		761147	72" Bolt on Cutting Edge			$241.00
		761148	78" Bolt on Cutting Edge			$259.00

ADDITIONAL EQUIPMENT

SD_39021 REAR DOOR

		761075	Rear Door			No Charge
		761205	Heavy Duty Rear Door			$440.00

MOVE TO BIC

L221 T4 FINAL SKID STEER LOADER
US PRICE LIST

(Wichita, KS)

SPECIAL PAINT

SD_50103 SPECIAL PAINT

		X50103X	No Special Paint			No Charge
		726029	Special Paint **The price listed is for a color change only from the standard factory color: CNH #86572648 (NH-Yellow). All Special Color formulations will be applied using approved factory processes and materials. Metallic or other special formulations and/or materials are not available. A color chip must be provided to CNH for non CNH colors. A minimum lead time of 8 business weeks will be required prior to production.** **Unless specified, regular production decals will be applied. Requests can be made that decals not be applied. However, SAFETY decals MUST BE APPLIED in all cases. The following components remain CNH grey: lift & bucket cylinders, front coupler and attachments, ROPS, side screens, upper chassis, control links, rear door, and wheels.**			$2,999.00

TELEMATICS

SD_K6450 TELEMATICS

		XK6450X	No Telematics			No Charge
		761198	NH FleetForce On-board **Unit is factory fit with wiring and modem.** **To order the Service Subscription contact Service Parts.**			$816.00

L221 T4 FINAL SKID STEER LOADER
US PRICE LIST

(Wichita, KS)

Factory Supplied Attachments

Order Code			Description	Weight	Factory Data	List Price
Basic Attachments						
		735030006	Heavy Duty Rear Door Kit Install Time = 0.5 hours Rear door insert	32 LB		$308.00
		735006006	Beacon Kit Install Time = 0.2 hours	1 LB		$154.00
		735007006	4-Corner LED Strobe Kit Install Time = 0.5 hours Reference dependency matrix.	24 LB		$500.00
		735159046	Heater Complete Kit Install Time = 11.0 hours Reference dependency matrix.	141 LB		$1,374.00
		735146016	Three Point Seat Belt Install Time = 1.0 hours	4 LB		$233.00
		735011006	Glass Front Door Kit Install Time = 2.0 hours Center mounted wiper. Requires three point seat belt. Reference dependency matrix.	182 LB		$1,543.00
		735012006	Demo Front Door Kit Install Time = 2.0 hours 1/2" polycarbonate door (will not shatter like glass). Center mounted wiper. Requires three point seat belt. Reference dependency matrix.	182 LB		$2,711.00
		735013006	Cab Side Windows Kit Install Time = 1.0 hours	139 LB		$865.00
		735016006	Radio Kit Install Time = 2.0 hours	16 LB		$413.00
		735150006	Open Cab Interior Trim Kit Install Time = 1.0 hours	25 LB		$372.00
		735020046	Road Light Kit Install Time = 2.5 hours Added front lights with turn signals that mount on the loader booms. Added rear lights with signals. (Reference image in SSL/CTL Brochure)	22 LB		$608.00
		735021006	Multi-Function Front Electrical Mech Kit Mech machines only Install Time = 2.0 hours Reference dependency matrix.	11 LB		$274.00
		735125006	Multi-Function Front Electrical E-H Kit For EH Machines Install Time = 2.0 hours Reference dependency matrix.	11 LB		$274.00
		735022046	One Way Self Level Kit Install Time = 4.0 hours	15 LB		$485.00
		735023006	Ride Control Kit Install Time = 4.0 hours Reference dependency matrix.	33 LB		$481.00

NEW HOLLAND CONSTRUCTION

L221 T4 FINAL SKID STEER LOADER
US PRICE LIST

(Wichita, KS)

		735024006	Hydraulic Coupler Kit Install Time = 8.0 hours Reference dependency matrix. For converting mechanical coupler to hydraulic coupler.	50 LB		$1,236.00
		735025076	High Flow Auxiliary Kit Install Time = 5.0 hours Reference dependency matrix.	191 LB		$2,519.00
		735027016	Second Hydraulic Front Auxiliary Kit Install Time = 8.0 hours Reference dependency matrix.	81 LB		$1,029.00
		735029036	Battery Disconnect Kit Install Time = 2.0 hours	2 LB		$151.00
		735037016	Single Point Lift Hook Kit Install Time = 4.0 hours	284 LB		$1,029.00
		735038006	FOPS Level 2 Modification Kit Install Time = 1.0 hours	61 LB		$343.00
		735039056	Extra Counterweight Kit Install Time = 0.5 hours	202 LB		$412.00
		735040146	Aspirator (Precleaner) Kit Install Time = 2.0 hours	14 LB		$319.00
		735042006	Interior Mirror Kit Install Time = 0.5 hours	4 LB		$58.00
		735045046	Foot Control Conversion Kit Install Time = 8.0 hours For use with Tier 4 models ONLY. Converting to Hand&Foot from Hand (H-Pattern). Not available for units equipped with Electro Hydraulic (EH) controls.	52 LB		$615.00
		735046046	Hand Control Conversion Kit Install Time = 6.0 hours For use with Tier 4 models ONLY. Converting to Hand (H-Pattern) from Hand&Foot. Not available for units equipped with Electro Hydraulic (EH) controls.	76 LB		$824.00
		735047006	120V Block Heater Kit Install Time = 0.5 hours	6 LB		$206.00
		735048006	220V Block Heater Kit Install Time = 0.5 hours	6 LB		$206.00
		735142006	Cylinder Guard Kit Install Time = 0.5 hours Provides protection to the loader bucket dump/curl cylinders in severe operating conditions.	21 LB		$739.00
		735153006	High Beam Light Kit Install Time = 1.0 hours Two added front lights; mounted inward of the standard front lights. Adding this kit would yield: four front lights along with turn signals (if already equipped with signals). Reference image in SSL/CTL Brochure.	11 LB		$199.00
		735158106	HVAC Complete Kit Must order applicable harness. Reference dependency matrix.	332 LB		$2,951.00

NEW HOLLAND CONSTRUCTION

L221 T4 FINAL SKID STEER LOADER
US PRICE LIST

(Wichita, KS)

		735161016	Heavy Duty Front Lights - Vertical Model Must order supporting bracket (84338448) and two (2)harnesses (84306340) from CNH Parts to complete kit.	26 LB		$372.00
		735163036	KIT, HEAVY DUTY REAR DOOR Rear Door	141 LB		$308.00
		735178026	Rediator Debris Kit Install Time = 4.0 hours To prevent large foreign material from damaging the radiator.	10 LB		$333.00
		735179006	Lap Bar Kit Install Time = 2.0 hours	40 LB		$600.00

Pallet Forks

		735075006	Pallet Fork Frame w/48" Tines	540 LB		$1,265.00

Dirt & Foundry Bucket

		735054016	66" Dirt & Foundry Bucket (1676 mm), 14.8 cu. ft. Heaped Capacity	374 LB		$881.00
		735055016	72" Dirt & Foundry Bucket (1829 mm), 16.2 cu. ft. Heaped Capacity	407 LB		$1,000.00
		735056016	78" Dirt & Foundry Bucket (1981 mm), 17.7 cu. ft. Heaped Capacity	429 LB		$1,038.00

Low Profile Bucket

		735058016	66" Low Profile Bucket (1676 mm), 13.4 cu. ft. Heaped Capacity	431 LB		$827.00
		735059016	72" Low Profile Bucket (1829 mm), 14.8 cu. ft. Heaped Capacity	471 LB		$903.00

Low Profile Extended Bucket

		735061016	66" Low Profile Extended Bucket (1676 mm), 15.9 cu. ft. Heaped Capacity	460 LB		$922.00
		735062016	72" Low Profile Extended Bucket (1829 mm), 17.7 cu. ft. Heaped Capacity	504 LB		$1,004.00
		735063016	78" Low Profile Extended Bucket (1981 mm), 19.1 cu. ft. Heaped Capacity	531 LB		$1,086.00
		735064016	84" Low Profile Extended Bucket (2134 mm), 20.5 cu. ft. Heaped Capacity	607 LB		$1,173.00

Light Material Bucket

		735066016	72" Light Material Bucket (1829 mm), 23.3 cu. ft. Heaped Capacity	466 LB		$841.00
		735067016	84" Light Material Bucket (2134 mm), 27.5 cu. ft. Heaped Capacity	532 LB		$981.00

Manure Slurry Bucket

		735069016	72" Manure-Slurry Bucket (1829 mm), 19.1 cu. ft. Heaped Capacity	469 LB		$856.00
		735070016	84" Manure-Slurry Bucket (2134 mm), 22.6 cu. ft. Heaped Capacity	535 LB		$995.00

NEW HOLLAND CONSTRUCTION

L221 T4 FINAL SKID STEER LOADER
US PRICE LIST

(Wichita, KS)

Heavy Duty Dirt Bucket

		735071016	66" Heavy Duty Dirt Bucket (1676 mm), 13.1 cu. ft. Heaped Capacity	449 LB		$1,134.00
		735072016	72" Heavy Duty Dirt Bucket (1829 mm), 14.1 cu. ft. Heaped Capacity	501 LB		$1,409.00
		735073016	78" Heavy Duty Dirt Bucket (1981 mm), 15.5 cu. ft. Heaped Capacity	526 LB		$1,538.00

SmartFit Teeth

		735184006	72" HDE Bucket w/ Teeth (1829 mm) 17.4 cu. ft. Heaped Capacity	624 LB		$1,692.00
		735185006	78" HDE Bucket w/ Teeth (1981 mm) 18.9 cu. ft. Heaped Capacity	697 LB		$1,898.00
		735186006	84" HDE Bucket w/ Teeth (2134 mm) 20.5 cu. ft. Heaped Capacity	728 LB		$2,032.00

Severe Duty Tire Assembly

		735097016	12x16.5 Severe Duty (70 OTW) RH Kit Galaxy Hulk Reference Loader Stop matrix. 1 tire assembly	168 LB		$645.00
		735117016	12x16.5 Severe Duty (70 OTW) LH Kit Galaxy Hulk Reference Loader Stop matrix. 1 tire assembly	168 LB		$645.00

BASIC ATTACHMENTS

		735019116	KIT TURN SIGNAL Plastic Lights	7 LB		$247.00

Heavy Duty Tire Assembly

		735087006	RH10X16.5 HVY DUTY CA 64OTW Reference Loader Stop matrix. 1 tire assembly	117 LB		$330.00
		735094006	12x16.5 Heavy Duty (70 OTW) RH Kit Reference Loader Stop matrix. 1 tire assembly	141 LB		$417.00
		735108006	10x16.5 Heavy Duty (64 OTW) LH Kit Reference Loader Stop matrix. 1 tire assembly	117 LB		$330.00
		735114006	12x16.5 Heavy Duty (70 OTW) LH Kit Reference Loader Stop matrix. 1 tire assembly	141 LB		$417.00

Premium-Liner Tire Assembly

		735089006	10x16.5 Premium-Liner (64 OTW) RH Kit Galaxy Beefy Baby III Reference Loader Stop matrix. 1 tire assembly	90 LB		$610.00

L221 T4 FINAL SKID STEER LOADER
US PRICE LIST

(Wichita, KS)

		735110006	10x16.5 Premium-Liner (64 OTW) LH Kit Galaxy Beefy Baby III Reference Loader Stop matrix. 1 tire assembly	90 LB		$610.00

Tweels

		735180006	KIT RH 10X16.5 TWEEL 1 Tweel assembly - RH	178 LB		$750.00
		735181006	KIT LH 10X16.5 TWEEL 1 Tweel Assembly - LH	178 LB		$750.00
		735182006	KIT RH 12X16.5 TWEEL 1 Tweel assembly - RH	226 LB		$850.00
		735183006	KIT LH 12X16.5 TWEEL 1 Tweel Assembly - LH	178 LB		$850.00

L228 T4 FINAL SKID STEER LOADER
US PRICE LIST

Standard Equipment

ENGINE:
- FPT F5H FL463H water cooled diesel engine
- 207 CID (3.4 L) Turbo
- Tier 4 Final Certified
- High Pressure Common Rail (HPCR)
- Fuel Injection
- Charged Air Cooler (CAC)
- Horsepower:
  - Gross 74
  - Net 68
  - Peak torque 232 lb*ft (314 Nm)
- 120 amp alternator
- Air cleaner – dual element
- Organic Acid Technology (OAT)
- Anti-freeze solution to -34° F
- Fuel tank - 25.5 gal. (U.S.)
- Particulate Matter Catalyst
- 3-stack after cooler / radiator /
- Oil cooler configuration
- Maintenance-Free Belt
- Glow Plugs
- Maintenance free 1000 CCA battery

OPERATOR'S PROTECTIVE STRUCTURE:
- ROPS/FOPS Level 1 canopy with side screens
- Control lockout system
- Tilt forward ROPS/FOPS
- Electric parking brake control
- Hand throttle
- Mechanical Foot Controls for loader with low effort Hand Controls for steering
- Operator's compartment floor cleanout
- Rear window with emergency escape
- Suspension Seat, vinyl with 2" retractable lap seat belt
- Dome Light
- 12V Power plug socket
- Cup holder
- Tool Pocket
- Top window
- Headliner

OPERATOR'S PROTECTIVE STRUCTURE (cont):
- Alarm package (backup and horn)

OTHER STANDARD FEATURES:
- Lights - 2 front, 2 rear (halogen)
- Pre-wired for rotating beacon
- Service access hood, lockable
- Steel Hoods & Covers
- Single point daily service
- Tail lights
- Remote Oil and Fuel Filters
- Debris Ingression Prevention Sealing
- Block Heater 120V-USA
- Front Electric Multi-Function Control

INSTRUMENTATION:
- Advanced Instrument Cluster with Hour meter, tachometer, fuel gauge, hydraulic oil temperature gauge, engine coolant temperature guage, diagnostic features and security lock-out
- Warning lights with alarms:
  - Critical system stop
  - Engine system
  - Hydraulic system
  - Electrical and diagnostic system
- Warning alarms:
  - Battery voltage (plus display)
  - Oil Service
- Indicator Light:
  - Engine preheat
  - Parking brake
  - Seat belt reminder

DRIVE:
- Servo assist, two-speed hydrostatic four wheel drive
- Spring applied hydraulic release (SAHR) disc parking brake
- Dynamic braking
- ASA #100 drive chain

L228 T4 FINAL SKID STEER LOADER
US PRICE LIST

Standard Equipment

HYDRAULICS:
- 6 micron oil filtration system
- 3 spool loader control valve
- Auxiliary hydraulics, Proportional thumb wheel activated: loader arm mounted with ISO specification flat face "connect-under-pressure" disconnects Including case drain
- Heavy duty hydraulic oil cooler
- Loader arm float position
- Auxiliary hydraulic function lockout override
- Loader arm circuit lockout override

LOADER:
- Mechanical attachment coupler
- Vertical Lift SUPERBOOM Geometry
- In-CAB Boom Lock
- SAE operating load: 2800 lbs.
- Tipping load: 5600 lbs.

TIRES:
- 12 x 16.5 Heavy Duty - 70 inch Over-the-Tire Width (OTW)

L228 T4 FINAL SKID STEER LOADER
US PRICE LIST

Models

COMMERCIAL MODEL	VERSION	MODEL	Weight	Factory Data	List Price
L228 T4 FINAL	Tier 4 B Regulated	L228	7,565 LB		$58,162.00

L228 T4 FINAL SKID STEER LOADER
US PRICE LIST

Factory Supplied Options

Order Code	Description	Weight	Factory Data	List Price

FAST PICK CONFIGURATION

SD_T9999 NEW HOLLAND CTL/SSL PACKAGES

		761609	761609 EH2-Basic-ROPS **E-H CONTROLS** **E-H CONTROL 2SPD** **FRONT ELEC/MULTI-FUNC** **REAR DOOR** **MANUAL COUPLER** **OPEN NO HEAT OR HVAC** **SUSPENSION SEAT** **STEEL LIGHTS W/ TS** **BLOCK HEATER 120V-USA** **LAP BAR**			($5,000.00)
		761612	761612 EH2-Plus-Cab **E-H CONTROLS** **E-H CONTROL 2SPD** **FRONT ELEC/MULTI-FUNC** **REAR DOOR** **HEAVY DUTY HYDRAULIC COUPLER** **HVAC-GLASS DOOR** **SUSPENSION SEAT** **STEEL LIGHTS W/ TS** **BLOCK HEATER 120V-USA** **LAP BAR**			($5,000.00)
		761615	761615 EH2-Deluxe-Air Cab **E-H CONTROLS** **E-H CONTROL 2SPD** **FRONT ELEC/MULTI-FUNC** **REAR DOOR** **HEAVY DUTY HYDRAULIC COUPLER** **HVAC-GLASS DOOR** **AIR SUSPENSION SEAT** **STEEL LIGHTS W/ TS** **BLOCK HEATER 120V-USA** **LAP BAR**			($5,000.00)

L228 T4 FINAL SKID STEER LOADER
US PRICE LIST

		761617	761617 FC2-Basic-ROPS **FOOT CONTROLS** **MECH CONTROL 2SPD** **FRONT ELEC/MULTI-FUNC** **REAR DOOR** **MANUAL COUPLER** **OPEN NO HEAT OR HVAC** **SUSPENSION SEAT** **STEEL LIGHTS W/ TS** **BLOCK HEATER 120V-USA** **LAP BAR**			($5,000.00)
		761620	761620 FC2-Plus-Cab **FOOT CONTROLS** **MECH CONTROL 2SPD** **FRONT ELEC/MULTI-FUNC** **REAR DOOR** **HEAVY DUTY HYDRAULIC COUPLER** **HVAC-GLASS DOOR** **SUSPENSION SEAT** **STEEL LIGHTS W/ TS** **BLOCK HEATER 120V-USA** **LAP BAR**			($5,000.00)
		761623	761623 FC2-Deluxe-Air Cab **FOOT CONTROLS** **MECH CONTROL 2SPD** **FRONT ELEC/MULTI-FUNC** **REAR DOOR** **HEAVY DUTY HYDRAULIC COUPLER** **HVAC-GLASS DOOR** **AIR SUSPENSION SEAT** **STEEL LIGHTS W/ TS** **BLOCK HEATER 120V-USA** **NO TELEMATICS-PARTS** **LAP BAR**			($5,000.00)
		761626	761626 FC2-Elite-Air Cab **FOOT CONTROLS** **MECH CONTROL 2SPD** **PERF w/FRONT ELEC, ONE WAY SELF LEVEL, and GLIDE RIDE** **REAR DOOR** **HEAVY DUTY HYDRAULIC COUPLER** **HVAC-GLASS DOOR** **AIR SUSPENSION SEAT** **STEEL LIGHTS W/ TS** **BLOCK HEATER 120V-USA** **LAP BAR**			($5,000.00)

L228 T4 FINAL SKID STEER LOADER
US PRICE LIST

		761628	761628 EH2-Limited-Air Cab **E-H CONTROLS** **E-H CONTROL 2SPD** **HIGH FLOW PLUS w/ HIGH FLOW HYDRAULICS, ONE WAY SELF LEVEL, GLIDE RIDE, MULTIFUNCTION FRONT ELECTRIC** **HEAVY DUTY REAR DOOR** **HEAVY DUTY HYDRAULIC COUPLER** **HVAC-GLASS DOOR** **AIR SUSPENSION SEAT** **STEEL LIGHTS W/ TS** **BLOCK HEATER 120V-USA** **LAP BAR**			($5,000.00)
		761633	761633 EH2-Elite-Air Cab **E-H CONTROLS** **E-H CONTROL 2SPD** **PERF w/FRONT ELEC, ONE WAY SELF LEVEL, and GLIDE RIDE** **REAR DOOR** **HEAVY DUTY HYDRAULIC COUPLER** **HVAC-GLASS DOOR** **AIR SUSPENSION SEAT** **STEEL LIGHTS W/ TS** **BLOCK HEATER 120V-USA** **LAP BAR**			($5,000.00)
		761641	FC2- BASICMC - CAB **FOOT CONTROLS** **MECH CONTROL 2SPD** **FRONT ELEC/MULTI-FUNC** **REAR DOOR** **MANUAL COUPLER** **HVAC-GLASS DOOR** **SUSPENSION SEAT** **STEEL LIGHTS W/ TS** **BLOCK HEATER 120V-USA#** **LAP BAR#**			($5,000.00)

CONTROLS AND TRANSMISSION

SD_01100 CONTROLS LEVEL

		761029	2 Speed Mechanical Controls **Available in "H Pattern" Hand Controls or Hand and Foot Controls**			No Charge
		761031	2 Speed E-H Controls **Electro-Hydraulic Switchable (ISO-H Pattern) Controls with Two Speed (includes arm rests and foot throttle)**			$2,095.00

NEW HOLLAND CONSTRUCTION

L228 T4 FINAL SKID STEER LOADER
US PRICE LIST

SD_01401 DRIVE CONTROL TYPE

		761040	Hand Controls **H Pattern, ONLY Select with Mechanical Controls (761029)**			No Charge
		761041	Hand and Foot Controls **ONLY Select with Mechanical Controls (761029)**			No Charge
		761042	E-H Controls **ONLY Select with E-H Controls (761031)**			No Charge

ROPS/CAB

SD_05009 CAB

		761043	Open Cab (No Heat or HVAC) **with top window and keyed start**			No Charge
		761045	Enclosed Cab with HVAC **Includes side windows, front glass door with wiper, shoulder belt, radio with speakers and keyless start**			$5,320.00
		761183	Enclosed Cab w/HVAC -Demo Door **Includes side windows, 1/2" polycarbonate (will not shatter like glass), front door with wiper, shoulder belt, radio with speakers, and keyless start.**			$7,445.00

SD_05016 OPEN CAB TRIM

		X05016X	No Open Cab Interior Trim Pkg			No Charge
		761186	Open Cab Interior Trim Package **For use with Open Cab. Covers interior sides and rear.**			$310.00

SD_05185 CAB SEAT

		761052	Suspension Seat (Vinyl)			No Charge
		761062	Air Ride Suspension Seat **(Fabric) with temperature control** **(may not be ordered with Open Cab option 761043)**			$584.00

SD_K5104 LAP BAR-NH

		XK5104X	NO LAP BAR NEW HOLLA **Comes with seat belt only. Seat belt must be engaged for machine operation.**			($265.00)
		761224	LAP BAR NEW HOLLAND **Lap Bar Installed from Factory.** **Seat belt included. Sensor moved from seat belt to the lap bar for machine operation (lap bar must be down to operate).**			No Charge

L228 T4 FINAL SKID STEER LOADER
US PRICE LIST

COUPLER

SD_K5101 COUPLERS

		726003	Manual Coupler			($1,094.00)
		761206	Heavy Duty Hydraulic Coupler			No Charge

BLOCK HEATER

SD_02086 BLOCK HEATER

		761048	Block Heater (120V)			No Charge

TURN SIGNALS

SD_06056 EXTERIOR LIGHTS

		463739	STEEL LIGHTS WITH TURN SIGNALS			No Charge

OPERATORS MANUAL

SD_32035 LANGUAGE OPTIONS

		761085	English			No Charge
		761088	French			No Charge
		761097	Spanish			No Charge

OPTIONAL PACKAGES

SD_01201 OPTION PACKAGES

		761034	Front Electric/Multi-Function **Contains Front Electric (Multi-Function) for Standard Auxiliaries**			No Charge
		761035	Performance w/Front Electric **Contains ON/OFF One-Way Self Leveling, Ride Control and Multi-Function Electric Control**			$1,173.00
		761036	High Flow Package **Contains High Flow Hydraulics with Multi-Function Electric Control.** **(Note: L228/L230 up to 38 GPM @ 3046 PSI)** **(Note: L234 up to 38 GPM @ 3450 PSI with ORFS connectors)**			$1,874.00
		761037	High Flow Plus Package **Contains Multi-Function, High Flow Hydraulics, ON/OFF One-way Self-Leveling and Glide Ride** **(Note: L228/L230 up to 38 GPM @ 3046 PSI)** **(Note: L234 up to 38 GPM @ 3450 PSI with ORFS connectors)**			$3,047.00

L228 T4 FINAL SKID STEER LOADER
US PRICE LIST

TIRES

SD_16068 TIRE OPTIONS

		8503107	12x16.5 Heavy Duty (70 OTW) **STANDARD TIRE** **10PR Stamped Center**			No Charge
		8503407	12x16.5 Severe Duty (70 OTW) **12PR Stamped Center**			
			if MODEL is L228			$800.00
		8505307	14X17.5 HVY DTY76OTW **STANDARD TIRE** **10PR Welded Plate Center - Galaxy XD2010** **may not be used for over-the-wheel tracks**			$1,829.00
		8505407	14X17.5 SVR DTY76OTW **STANDARD TIRE** **14PR Welded Plate Center - Galaxy Hulk** **may not be used for over-the-wheel tracks**			$1,500.00
		8505707	12x16.5 TWEEL All Terrain			$3,400.00

FRONT ATTACHMENTS

BUCKETS

SD_K5231 BUCKETS

		XK5231X	No Bucket			No Charge
		Dirt & Foundry Bucket				
		761125	72" Dirt & Foundry Bucket **(1829 mm), 16.7 cu. ft. Heaped Capacity**			$1,000.00
		761126	78" Dirt & Foundry Bucket **(1981 mm), 18.4 cu. ft. Heaped Capacity**			$1,038.00
		Heavy Duty Dirt Bucket				
		761142	72" Heavy Duty Dirt Bucket **(1829 mm), 14.6 cu. ft. Heaped Capacity**			$1,409.00
		761143	78" Heavy Duty Dirt Bucket **(1981 mm), 15.9 cu. ft. Heaped Capacity**			$1,538.00
		761144	84" Heavy Duty Dirt Bucket **(2134 mm), 19.4 cu. ft. Heaped Capacity**			$1,589.00
		Light Material Bucket				
		761136	72" Light Material Bucket **(1829 mm), 23.7 cu. ft. Heaped Capacity**			$841.00
		761137	84" Light Material Bucket **(2134 mm), 27.9 cu. ft. Heaped Capacity**			$981.00
		Low Profile Bucket				
		761129	72" Low Profile Bucket **(1829 mm), 14.5 cu. ft. Heaped Capacity**			$903.00

L228 T4 FINAL SKID STEER LOADER
US PRICE LIST

		Low Profile Extended				
		761132	72" Low Profile Extended **(1829 mm), 17.1 cu. ft. Heaped Capacity**			$1,004.00
		761133	78" Low Profile Extended **(1981 mm), 18.6 cu. ft. Heaped Capacity**			$1,086.00
		761134	84" Low Profile Extended **(2134 mm), 20.2 cu. ft. Heaped Capacity**			$1,173.00
		Manure-Slurry Bucket				
		761139	72" Manure-Slurry Bucket **(1829 mm), 19.1 cu. ft. Heaped Capacity**			$856.00
		761140	84" Manure-Slurry Bucket **(2134 mm), 22.5 cu. ft. Heaped Capacity**			$995.00
		SmartFit Teeth				
		761254	72" HD Ext. w/ SmartFit Teeth **(1829 mm) 17.4 cu. ft. Heaped Capacity**			$1,692.00
		761255	78" HD Ext. w/ SmartFit Teeth **(1981 mm) 18.9 cu. ft. Heaped Capacity**			$1,898.00
		761256	84" HD Ext. w/ SmartFit Teeth **(2134 mm) 20.5 cu. ft. Heaped Capacity**			$2,032.00

BOLT ON CUTTING EDGE

SD_K6399 BOLT ON CUTTING EDGE

		XK6399X	No Bolt on Cutting Edge			No Charge
		761147	72" Bolt on Cutting Edge			$241.00
		761148	78" Bolt on Cutting Edge			$259.00
		761149	84" Bolt on Cutting Edge			$279.00

ADDITIONAL EQUIPMENT

SD_39021 REAR DOOR

		761075	Rear Door			No Charge
		761205	Heavy Duty Rear Door			$440.00

MOVE TO BIC

L228 T4 FINAL SKID STEER LOADER
US PRICE LIST

SPECIAL PAINT

SD_50103 SPECIAL PAINT

		X50103X	No Special Paint			No Charge
		726029	Special Paint **The price listed is for a color change only from the standard factory color: CNH #86572648 (NH-Yellow). All Special Color formulations will be applied using approved factory processes and materials. Metallic or other special formulations and/or materials are not available. A color chip must be provided to CNH for non CNH colors. A minimum lead time of 8 business weeks will be required prior to production.** **Unless specified, regular production decals will be applied. Requests can be made that decals not be applied. However, SAFETY decals MUST BE APPLIED in all cases. The following components remain CNH grey: lift & bucket cylinders, front coupler and attachments, ROPS, side screens, upper chassis, control links, rear door, and wheels.**			$2,999.00

TELEMATICS

SD_K6450 TELEMATICS

		XK6450X	No Telematics			No Charge
		761198	NH FleetForce On-board **Factory fit with wiring and modem.** **To order the Service Subscription contact Service Parts.**			$816.00

L228 T4 FINAL SKID STEER LOADER
US PRICE LIST

Factory Supplied Attachments

Order Code			Description	Weight	Factory Data	List Price
BASIC ATTACHMENTS						
		735040136	Aspirator Kit Install Time = 2.0 hours For use with TIER 4 FINAL ONLY.	14 LB		$317.00
		735006006	Beacon Kit Install Time = 0.2 hours	1 LB		$154.00
		735007006	4-Corner LED Strobe Kit Install Time = 0.5 hours Reference dependency matrix.	24 LB		$500.00
		735011006	Glass Front Door Kit Install Time = 2.0 hours Center mounted wiper. Requires three point seat belt. Must order applicable harness. Reference dependency matrix.	182 LB		$1,543.00
		735012006	Demo Front Door Kit Install Time = 2.0 hours 1/2" polycarbonate door (will not shatter like glass) Center Mounted wiper Requires three point seat belt. Must order applicable harness. Reference dependency matrix.	182 LB		$2,711.00
		735013006	Cab Side Windows Kit Install Time = 1.0 hours	139 LB		$865.00
		735016006	Radio Kit Install Time = 2.0 hours Reference dependency matrix.	16 LB		$413.00
		735019106	KIT, TURN SIGNAL Install Time = 2.0 hours Will not work with Steel Light fixture. Plastic Lights. FOR L228, C232 T4 Final.	7 LB		$247.00
		735020166	KIT ROAD LIGHTS Install Time = 2.0 hours Added front lights with turn signals that mount on the loader booms. Added rear lights with signals. (Reference image in SSL/CTL Brochure)	32 LB		$606.00
		735021016	Multi-Function Front Electrical Mech Kit For Mech machines. Install Time = 2.0 hours Reference dependency matrix.	11 LB		$274.00
		735022106	Kit Self-Level	30 LB		$451.00
		735023006	Ride Control Kit Install Time = 4.0 hours	33 LB		$481.00
		735024016	Hydraulic Coupler Kit Install Time = 8.0 hours Reference dependency matrix. For converting mechanical coupler to hydraulic coupler.	159 LB		$1,236.00
		735025066	High Flow Auxiliary Kit Install Time = 5.0 hours For use with TIER 4 models ONLY. Reference dependency matrix.	191 LB		$2,519.00

NEW HOLLAND CONSTRUCTION

L228 T4 FINAL SKID STEER LOADER
US PRICE LIST

		735027056	Second Hydraulic Front Auxiliary Kit Install Time = 8.0 hours	99 LB		$1,029.00
		735030006	Heavy Duty Rear Door Kit Install Time = 0.5 hours Rear door insert	32 LB		$308.00
		735036026	4-Point Lift Hook Kit Install Time = 1.0 hours	11 LB		$238.00
		735037046	Single Point Lift Hook Kit Install Time = 4.0 hours	269 LB		$1,029.00
		735038006	FOPS Level 2 Modification Kit Install Time = 1.0 hours	61 LB		$343.00
		735039066	Extra Counterweight Kit Install Time = 2.4 hours	362 LB		$687.00
		735042006	Interior Mirror Kit Install Time = 0.5 hours	4 LB		$58.00
		735045046	Foot Control Conversion Kit Install Time = 8.0 hours For use with Tier 4 models ONLY. Converting to Hand&Foot from Hand (H-Pattern). Not available for units equipped with Electro Hydraulic (EH) controls.	52 LB		$615.00
		735046076	Hand Control Conversion Kit Install Time = 6.0 hours Converting to Hand (H-Pattern) from Hand&Foot. Not available for units equipped with Electro Hydraulic (EH) controls.	76 LB		$750.00
		735047006	120V Block Heater Kit Install Time = 0.5 hours	6 LB		$206.00
		735048006	220V Block Heater Kit Install Time = 0.5 hours	6 LB		$206.00
		735125016	Multi-Function Front Electrical E-H Kit For EH Machines Install Time = 2.0 hours Reference dependency matrix.	11 LB		$274.00
		735142006	Cylinder Guard Kit Install Time = 0.5 hours Provides protection to the loader bucket dump/curl cylinders in severe operating conditions.	21 LB		$739.00
		735146016	Three Point Seat Belt Install Time = 1.0 hours	4 LB		$233.00
		735150006	Open Cab Interior Trim Kit Install Time = 1.0 hours	25 LB		$372.00
		735153006	High Beam Light Kit Install Time = 1.0 hours Two added front lights; mounted inward of the standard front lights. Adding this kit would yield: four front lights along with turn signals (if already equipped with signals). Reference image in SSL/CTL Brochure.	11 LB		$199.00
		735158136	HVAC Complete Install Time = 28.0 hours	382 LB		$2,951.00
		735159046	Heater Complete Kit Install Time = 11.0 hours	141 LB		$1,374.00

NEW HOLLAND CONSTRUCTION

L228 T4 FINAL SKID STEER LOADER
US PRICE LIST

		735160016	Fender Extensions - Large Frame Install Time = 1.5 hours	45 LB		$334.00
		735161016	Heavy Duty Front Lights - Vertical Model Must order supporting bracket (84338448) and two (2) harnesses (84306340) form service parts to complete kit.	26 LB		$372.00
		735163026	KIT, HEAVY DUTY REAR DOOR Rear Door	141 LB		$667.00
		735178036	Radiator Debris Kit Install Time = 1.0 hours To prevent large foreign objects from hitting the radiator.	10 LB		$333.00
		735179006	Lap Bar Kit Install Time = 2.0 hours	40 LB		$600.00

Dirt & Foundry Bucket

		735055016	72" Dirt & Foundry Bucket (1829 mm), 16.2 cu. ft. Heaped Capacity	407 LB		$1,000.00
		735056016	78" Dirt & Foundry Bucket (1981 mm), 17.7 cu. ft. Heaped Capacity	429 LB		$1,038.00

HD Dirt Bucket

		735072016	72" Heavy Duty Dirt Bucket (1829 mm), 14.1 cu. ft. Heaped Capacity	501 LB		$1,409.00
		735073016	78" Heavy Duty Dirt Bucket (1981 mm), 15.5 cu. ft. Heaped Capacity	526 LB		$1,538.00
		735074016	84" Heavy Duty Dirt Bucket (2134 mm), 17.0 cu. ft. Heaped Capacity	550 LB		$1,589.00

Light Material Bucket

		735066016	72" Light Material Bucket (1829 mm), 23.3 cu. ft. Heaped Capacity	466 LB		$841.00
		735067016	84" Light Material Bucket (2134 mm), 27.5 cu. ft. Heaped Capacity	532 LB		$981.00

Low Profile Bucket

		735059016	72" Low Profile Bucket (1829 mm), 14.8 cu. ft. Heaped Capacity	471 LB		$903.00

Low Profile Extended Bucket

		735062016	72" Low Profile Extended Bucket (1829 mm), 17.7 cu. ft. Heaped Capacity	504 LB		$1,004.00
		735063016	78" Low Profile Extended Bucket (1981 mm), 19.1 cu. ft. Heaped Capacity	531 LB		$1,086.00
		735064016	84" Low Profile Extended Bucket (2134 mm), 20.5 cu. ft. Heaped Capacity	607 LB		$1,173.00

Manure Slurry Bucket

		735069016	72" Manure-Slurry Bucket (1829 mm), 19.1 cu. ft. Heaped Capacity	469 LB		$856.00
		735070016	84" Manure-Slurry Bucket (2134 mm), 22.6 cu. ft. Heaped Capacity	535 LB		$995.00

L228 T4 FINAL SKID STEER LOADER
US PRICE LIST

Pallet Forks

		735075006	Pallet Fork Frame w/48" Tines	540 LB		$1,265.00

SmartFit Teeth

		735184006	72" HDE Bucket w/ Teeth (1829 mm) 17.4 cu. ft. Heaped Capacity	624 LB		$1,692.00
		735185006	78" HDE Bucket w/ Teeth (1981 mm) 18.9 cu. ft. Heaped Capacity	697 LB		$1,898.00
		735186006	84" HDE Bucket w/ Teeth (2134 mm) 20.5 cu. ft. Heaped Capacity	728 LB		$2,032.00

Tires

		735094006	12x16.5 Heavy Duty (70 OTW) RH Kit Reference Loader Stop matrix. 1 tire assembly	141 LB		$417.00
		735097016	12x16.5 Severe Duty (70 OTW) RH Kit Galaxy Hulk Reference Loader Stop matrix. 1 tire assembly	168 LB		$645.00
		735099006	12x16.5 Non-Pneumatic (70 OTW) LH Kit Solid Flex Reference Loader Stop matrix. 1 tire assembly	301 LB		$1,189.00
		735114006	12x16.5 Heavy Duty (70 OTW) LH Kit Reference Loader Stop matrix. 1 tire assembly	141 LB		$417.00
		735117016	12x16.5 Severe Duty (70 OTW) LH Kit Galaxy Hulk Reference Loader Stop matrix. 1 tire assembly	168 LB		$645.00
		735119006	12x16.5 Non-Pneumatic (70 OTW) RH Kit Solid Flex Reference Loader Stop matrix. 1 tire assembly	301 LB		$1,189.00
		735172006	RH 14X17.5 HVY DUTY 76OTW 10PR Welded Plate Center - Galaxy XD2010	150 LB		$595.00
		735173006	RH 14X17.5 SVER DUTY76OTW 14PR Welded Plate Center - Galaxy Hulk	187 LB		$809.00
		735175006	LH 14X17.5 HVY DUTY 76OTW 10PR Welded Plate Center - Galaxy XD2010	150 LB		$595.00
		735176006	LH 14X17.5 SVER DUTY76OTW 14PR Welded Plate Center - Galaxy Hulk	187 LB		$809.00

Tweels

		735182006	KIT RH 12X16.5 TWEEL 1 Tweel assembly - RH	226 LB		$850.00
		735183006	KIT LH 12X16.5 TWEEL 1 Tweel Assembly - LH	178 LB		$850.00

		735029096	KIT, BATTERY DISCONNECT Install Time = 2.0 hours	3 LB		$151.00

L234 TIER 4 FINAL SKID STEER LOADER
US PRICE LIST

Standard Equipment

ENGINE:
- FPT F5B FL413E water cooled diesel engine
- 207 CID (3.4 L) Turbo
- Tier 4 Final Certified
- High Pressure Common Rail (HPCR)
- Fuel Injection
- Charged Air Cooler (CAC)
- Horsepower:
  - Gross 90
  - Net 84
  - Peak torque 282 lb*ft (383 Nm)
- 120 amp alternator
- Air cleaner – dual element
- Organic Acid Technology (OAT)
- Anti-freeze solution to -34° F
- Fuel tank - 25.5 gal. (U.S.)
- Selective Catalytic Reduction (SCR)
- Muffler
- Diesel Exhaust Fluid (DEF) Tank – 2.8 gal. (U.S.)
- 3-stack after cooler / radiator /
- Oil cooler configuration
- Maintenance Free Belt
- Glow Plugs
- Maintenance free 1000 CCA battery with master electrical disconnect

OPERATOR'S PROTECTIVE STRUCTURE:
- ROPS/FOPS Level 1 canopy with side screens
- Control lockout system
- Tilt forward ROPS/FOPS
- Electric parking brake control
- Hand throttle
- Mechanical Foot Controls for loader with low effort Hand Controls for steering
- Operator's compartment floor cleanout
- Rear window with emergency escape
- Suspension Seat, vinyl with 2" retractable lap seat belt

OPERATOR'S PROTECTIVE STRUCTURE (cont):
- Dome Light
- 12V Power plug socket
- Cup holder
- Tool Pocket
- Top window
- Headliner
- Alarm package (backup and horn)

OTHER STANDARD FEATURES:
- Lights - 4 front lights (2 forward facing, 2 @ 45 degree forward), 2 rear (halogen)
- Pre-wired for rotating beacon
- Service access hood, lockable
- Steel Hoods & Covers
- Single point daily service
- Tail lights
- Remote Oil and Fuel Filters
- Debris Ingression Prevention Sealing
- Heavy Duty Rear Door
- Block Heater 120V-USA
- Front Electric Multi-Function Control

INSTRUMENTATION:
- Advanced Instrument Cluster with hour meter, tachometer, fuel gauge, Diesel Exhaust Fluid gauge, engine coolant temperature gauge, diagnostic features and security lock-out
- Warning lights with alarms:
  - Critical system stop
  - Engine system
  - Hydraulic system
  - Electrical and diagnostic system
- Warning alarms:
  - Battery voltage (plus display)
  - Diesel Exhaust Fluid (DEF)
  - Oil Service
- Indicator Light:
  - Engine preheat, Parking brake, Seat belt reminder

L234 TIER 4 FINAL SKID STEER LOADER
US PRICE LIST

Standard Equipment

DRIVE:
- Servo assist, two-speed hydrostatic four wheel drive
- Spring applied hydraulic release (SAHR) disc parking brake
- Dynamic braking
- ASA #100 drive chain

HYDRAULICS:
- 6 micron oil filtration system
- 3 spool loader control valve
- Auxiliary hydraulics, Proportional thumb wheel activated: loader arm mounted with ISO specification flat face "connect-under-pressure" disconnects
  - Including case drain
- Heavy duty hydraulic oil cooler
- Loader arm float position
- Auxiliary hydraulic function lockout override
- Loader arm circuit lockout override

LOADER:
- Mechanical attachment coupler
- Vertical Lift SUPERBOOM Geometry
- In-CAB Boom Lock
- SAE operating load: 3400 lbs.
- Tipping load: 6800 lbs.

L234 TIER 4 FINAL SKID STEER LOADER
US PRICE LIST

Models

COMMERCIAL MODEL	VERSION	MODEL	Weight	Factory Data	List Price
L234 T4B-C	T4B-C	L234	8,903 LB		$73,514.00

L234 TIER 4 FINAL SKID STEER LOADER
US PRICE LIST

Factory Supplied Options

Order Code	Description	Weight	Factory Data	List Price

FAST PICK CONFIGURATION

SD_T9999 NEW HOLLAND CTL/SSL PACKAGES

		761610	761610 EH2-Basic-ROPS **E-H CONTROLS** **E-H CONTROL 2SPD** **FRONT ELEC/MULTI-FUNC** **HEAVY DUTY REAR DOOR** **MANUAL COUPLER** **OPEN NO HEAT OR HVAC** **SUSPENSION SEAT** **STEEL LIGHTS W/ TS** **BLOCK HEATER 120V-USA** **LAP BAR**			($6,000.00)
		761613	761613 EH2-Plus-Cab **E-H CONTROLS** **E-H CONTROL 2SPD** **FRONT ELEC/MULTI-FUNC** **HEAVY DUTY REAR DOOR** **HEAVY DUTY HYDRAULIC COUPLER** **HVAC-GLASS DOOR** **SUSPENSION SEAT** **STEEL LIGHTS W/ TS** **BLOCK HEATER 120V-USA** **LAP BAR**			($6,000.00)
		761616	761616 EH2-Deluxe-Air Cab **E-H CONTROLS** **E-H CONTROL 2SPD** **FRONT ELEC/MULTI-FUNC** **HEAVY DUTY REAR DOOR** **HEAVY DUTY HYDRAULIC COUPLER** **HVAC-GLASS DOOR** **AIR SUSPENSION SEAT** **STEEL LIGHTS W/ TS** **BLOCK HEATER 120V-USA** **LAP BAR**			($6,000.00)

L234 TIER 4 FINAL SKID STEER LOADER
US PRICE LIST

		761618	761618 FC2-Basic-ROPS **FOOT CONTROLS** **MECH CONTROL 2SPD** **FRONT ELEC/MULTI-FUNC** **HEAVY DUTY REAR DOOR** **MANUAL COUPLER** **OPEN NO HEAT OR HVAC** **SUSPENSION SEAT** **STEEL LIGHTS W/ TS** **BLOCK HEATER 120V-USA** **LAP BAR**			($6,000.00)
		761621	761621 FC2-Plus-Cab **FOOT CONTROLS** **MECH CONTROL 2SPD** **FRONT ELEC/MULTI-FUNC** **HEAVY DUTY REAR DOOR** **HEAVY DUTY HYDRAULIC COUPLER#** **HVAC-GLASS DOOR** **SUSPENSION SEAT** **STEEL LIGHTS W/ TS** **BLOCK HEATER 120V-USA** **LAP BAR**			($6,000.00)
		761624	761624 FC2-Elite-Air Cab **FOOT CONTROLS** **MECH CONTROL 2SPD** **PERF w/FRONT ELEC/MULTI. FUNC., SELF LEVEL, RIDE CONTROL** **HEAVY DUTY REAR DOOR** **HEAVY DUTY HYDRAULIC COUPLER** **HVAC-GLASS DOOR** **AIR SUSPENSION SEAT** **STEEL LIGHTS W/ TS** **BLOCK HEATER 120V-USA** **LAP BAR**			($6,000.00)
		761628	761628 EH2-Limited-Air Cab **E-H CONTROLS** **E-H CONTROL 2SPD** **HIGH FLOW PLUS FRONT ELEC./MULTI-FUNC, SELF LEVEL, RIDE CONTROL** **HEAVY DUTY REAR DOOR** **HEAVY DUTY HYDRAULIC COUPLER** **HVAC-GLASS DOOR** **AIR SUSPENSION SEAT** **STEEL LIGHTS W/ TS** **BLOCK HEATER 120V-USA** **LAP BAR**			($6,000.00)

L234 TIER 4 FINAL SKID STEER LOADER
US PRICE LIST

		761631	761631 FC2-Limited-Air Cab **FOOT CONTROLS** **MECH CONTROL 2SPD** **HIGH FLOW w/ FRONT MULTIFUNCTION CONTROL, SELF LEVEL, RIDE CONTROL** **HEAVY DUTY REAR DOOR** **HEAVY DUTY HYDRAULIC COUPLER** **HVAC-GLASS DOOR** **AIR SUSPENSION SEAT** **STEEL LIGHTS W/ TS** **BLOCK HEATER 120V-USA** **LAP BAR**			($6,000.00)
		761634	761634 EH2-Elite-Air Cab **E-H CONTROLS** **E-H CONTROL 2SPD** **PERF w/FRONT ELEC, SELF LEVEL, and RIDE CONTROL** **HEAVY DUTY REAR DOOR** **HEAVY DUTY HYDRAULIC COUPLER** **HVAC-GLASS DOOR** **AIR SUSPENSION SEAT** **STEEL LIGHTS W/ TS** **BLOCK HEATER 120V-USA** **LAP BAR**			($6,000.00)
		761637	EH2-ELITE HF-AIR CAB **E-H CONTROLS** **E-H CONTROL 2SPD** **HIGH FLOW w/ MULTI FUNCTION FRONT ELECTRIC** **HEAVY DUTY REAR DOOR** **HEAVY DUTY HYDRAULIC COUPLER** **HVAC-GLASS DOOR** **AIR SUSPENSION SEAT** **STEEL LIGHTS W/ TS** **BLOCK HEATER 120V-USA** **LAP BAR**			($6,000.00)

CONTROLS AND TRANSMISSION

SD_01100 CONTROLS LEVEL

		761029	2 Speed Mechanical Controls **Available in "H Pattern" Hand Controls or Hand and Foot Controls**			No Charge
		761031	2 Speed E-H Controls **Electro-Hydraulic Switchable (ISO-H Pattern) Controls with Two Speed (includes arm rests and foot throttle)**			$2,095.00

L234 TIER 4 FINAL SKID STEER LOADER
US PRICE LIST

SD_01401 DRIVE CONTROL TYPE

		761040	Hand Controls **H Pattern, ONLY Select with Mechanical Controls (761029)**			No Charge
		761041	Hand and Foot Controls **ONLY Select with Mechanical Controls (761029)**			No Charge
		761042	E-H Controls **ONLY Select with E-H Controls (761031)**			No Charge

ROPS/CAB

SD_05009 CAB

		761043	Open Cab (No Heat or HVAC) **with top window and keyed start**			No Charge
		761045	Enclosed Cab with HVAC **Includes side windows, front glass door with wiper, shoulder belt, radio with speakers and keyless start**			$5,320.00
		761183	Enclosed Cab w/HVAC -Demo Door **Includes side windows, 1/2" polycarbonate (will not shatter like glass), front door with wiper, shoulder belt, radio with speakers, and keyless start.**			$7,445.00

SD_05016 OPEN CAB TRIM

		X05016X	No Open Cab Interior Trim Pkg			No Charge
		761186	Open Cab Interior Trim Package **For use with Open Cab. Covers interior sides and rear.**			$310.00

SD_05185 CAB SEAT

		761052	Suspension Seat (Vinyl)			No Charge
		761062	Air Ride Suspension Seat **Fabric with temperature control** **(may not be ordered with Open Cab option 761043)**			$584.00

SD_K5104 LAP BAR-NH

		761224	LAP BAR NEW HOLLAND **Lap Bar Installed from Factory.** **Seat belt included. Sensor moved from seat belt to the lap bar for machine operation (lap bar must be down to operate).**			No Charge
		XK5104X	NO LAP BAR NEW HOLLA **Comes with seat belt only. Seat belt must be engaged for machine operation.**			($265.00)

L234 TIER 4 FINAL SKID STEER LOADER
US PRICE LIST

COUPLER

SD_K5101 COUPLERS

		726003	Manual Coupler			No Charge
		761206	Heavy Duty Hydraulic Coupler			$1,027.00

BLOCK HEATER

SD_02086 BLOCK HEATER

		761048	Block Heater (120V)			No Charge

TURN SIGNALS

SD_06056 EXTERIOR LIGHTS

		463739	STEEL LIGHTS WITH TURN SIGNALS			No Charge

OPERATORS MANUAL

SD_32035 LANGUAGE OPTIONS

		761085	English			No Charge
		761088	French			No Charge
		761097	Spanish			No Charge

OPTIONAL PACKAGES

SD_01201 OPTION PACKAGES

		761034	Front Electric/Multi-Function **Contains Front Electric (Multi-Function) for Standard Auxiliaries**			No Charge
		761035	Performance w/Front Electric **Contains ON/OFF One-Way Self Leveling, Ride Control and Multi-Function Electric Control**			$1,172.00
		761036	High Flow Package **Contains High Flow Hydraulics with Multi-Function Electric Control.** **Note: L234 up to 38 GPM @ 3450 PSI with ORFS connectors**			$1,874.00
		761037	High Flow Plus Package **Contains Multi-Function, High Flow Hydraulics, ON/OFF One-way Self-Leveling and Glide Ride** **Note: L234 up to 38 GPM @ 3450 PSI with ORFS connectors**			$3,047.00

NEW HOLLAND CONSTRUCTION

L234 TIER 4 FINAL SKID STEER LOADER
US PRICE LIST

		761039	Enhanced High Flow Package **Only available with units equipped with EH Controls** **Contains 4000 PSI High Flow Hydraulics, Second Auxiliaries,** **Multi-Function Electric Control, High Flow Hydraulics,** **ON/OFF One-way Self Leveling and Glide Ride**			$6,317.00

TIRES

SD_16068 TIRE OPTIONS

		8503107	12x16.5 Heavy Duty (70 OTW) **10PR Stamped Center** **STANDARD TIRE**			($505.00)
		8503207	12x16.5 Premium (70 OTW) **10PR Stamped Center**			$212.00
		8503407	12x16.5 Severe Duty (70 OTW) **12PR Stamped Center**			$800.00
		8505307	14X17.5 HVY DTY76OTW **STANDARD TIRE** **10PR Welded Plate Center** **may not be used for over-the-wheel tracks**			$1,828.00
		8505407	14X17.5 SVR DTY76OTW **14PR Welded Plate Center - Galaxy Hulk** **may not be used for over-the-wheel tracks**			$1,500.00
		8505707	12x16.5 TWEEL All Terrain **70 OTW**			$3,400.00

FRONT ATTACHMENTS

BUCKETS

SD_K5231 BUCKETS

		761125	72" Dirt & Foundry Bucket **(1829 mm), 16.7 cu. ft. Heaped Capacity**			$1,000.00
		761126	78" Dirt & Foundry Bucket **(1981 mm), 18.4 cu. ft. Heaped Capacity**			$1,038.00
		761129	72" Low Profile Bucket **(1829 mm), 14.5 cu. ft. Heaped Capacity**			$903.00
		761132	72" Low Profile Extended **(1829 mm), 17.1 cu. ft. Heaped Capacity**			$1,004.00
		761133	78" Low Profile Extended **(1981 mm), 18.6 cu. ft. Heaped Capacity**			$1,086.00
		761134	84" Low Profile Extended **(2134 mm), 20.2 cu. ft. Heaped Capacity**			$1,173.00
		761136	72" Light Material Bucket **(1829 mm), 23.7 cu. ft. Heaped Capacity**			$897.00

L234 TIER 4 FINAL SKID STEER LOADER
US PRICE LIST

		761137	84" Light Material Bucket **(2134 mm), 27.9 cu. ft. Heaped Capacity**			$1,047.00
		761139	72" Manure-Slurry Bucket **(1829 mm), 19.1 cu. ft. Heaped Capacity**			$856.00
		761140	84" Manure-Slurry Bucket **(2134 mm), 22.5 cu. ft. Heaped Capacity**			$995.00
		761142	72" Heavy Duty Dirt Bucket **(1829 mm), 14.6 cu. ft. Heaped Capacity**			$1,409.00
		761143	78" Heavy Duty Dirt Bucket **(1981 mm), 15.9 cu. ft. Heaped Capacity**			$1,538.00
		761144	84" Heavy Duty Dirt Bucket **(2134 mm), 19.4 cu. ft. Heaped Capacity**			$1,589.00
		XK5231X	No Bucket			No Charge
SmartFit Teeth						
		761255	78" HD Ext. w/ SmartFit Teeth **(1981 mm) 17.7 cu. ft. Heaped Capacity**			$1,898.00
		761256	84" HD Ext. w/ SmartFit Teeth **(2134 mm) 20.5 cu. ft. Heaped Capacity**			$2,032.00

BOLT ON CUTTING EDGE

SD_K6399 BOLT ON CUTTING EDGE

		761147	72" Bolt on Cutting Edge			$241.00
		761148	78" Bolt on Cutting Edge			$259.00
		761149	84" Bolt on Cutting Edge			$279.00
		XK6399X	No Bolt on Cutting Edge			No Charge

ADDITIONAL EQUIPMENT

SD_34008 BATTERY DISCONNECT

		761074	Battery Disconnect			No Charge

ADDITIONAL EQUIPMENT

SD_39021 REAR DOOR

		761211	Heavy Duty Rear Door - NH			No Charge

L234 TIER 4 FINAL SKID STEER LOADER
US PRICE LIST

MOVE TO BIC

SPECIAL PAINT

SD_50103 SPECIAL PAINT

		726029	Special Paint **The price listed is for a color change only from the standard factory color: CNH #86572648 (NH-Yellow). All Special Color formulations will be applied using approved factory processes and materials. Metallic or other special formulations and/or materials are not available. A color chip must be provided to CNH for non CNH colors. A minimum lead time of 8 business weeks will be required prior to production.** **Unless specified, regular production decals will be applied. Requests can be made that decals not be applied. However, SAFETY decals MUST BE APPLIED in all cases. The following components remain CNH grey: lift & bucket cylinders, front coupler and attachments, ROPS, side screens, upper chassis, control links, rear door, and wheels.**			$2,999.00
		X50103X	No Special Paint			No Charge

TELEMATICS

SD_K6450 TELEMATICS

		761198	NH FleetForce On-board **Unit is factory fit complete with wiring and modem.** **To order the Service Subscription contact Service Parts.**			$816.00
		XK6450X	No Telematics			No Charge

L234 TIER 4 FINAL SKID STEER LOADER
US PRICE LIST

Factory Supplied Attachments

Order Code			Description	Weight	Factory Data	List Price
BASIC ATTACHMENTS						
		735006006	Beacon Kit Install Time = 0.2 hours	1 LB		$154.00
		735007006	4-Corner LED Strobe Kit Install Time = 0.5 hours Reference dependency matrix.	24 LB		$500.00
		735011006	Glass Front Door Kit Install Time = 2.0 hours Center mounted wiper. Requires three point seat belt. Must order applicable harness. Reference dependency matrix.	182 LB		$1,543.00
		735012006	Demo Front Door Kit Install Time = 2.0 hours Center mounted wiper. Requires three point seat belt. Must order applicable harness. Reference dependency matrix.	182 LB		$2,711.00
		735013006	Cab Side Windows Kit Install Time = 1.0 hours	139 LB		$865.00
		735016006	Radio Kit Install Time = 2.0 hours Reference dependency matrix.	16 LB		$413.00
		735019106	KIT, TURN SIGNAL Plastic lights.	7 LB		$247.00
		735020186	KIT ROAD LIGHTS	32 LB		$608.00
		735021046	Multi-Function Front Electrical Mech Kit Install Time = 2.0 hours For use in mehcnaical control machines.	8 LB		$274.00
		735022076	One Way Self Level Kit Install Time = 4.0 hours	14 LB		$485.00
		735023046	Ride Control/Glide Ride Kit Install Time = 4.0 hours Reference dependency matrix.	33 LB		$465.00
		735024056	Hydraulic Coupler Kit Install Time = 8.0 hours Reference dependency matrix. For converting manual coupler to hydraulic coupler.	50 LB		$1,345.00
		735025136	High Flow Auxiliary Install Time = 5.0 hours Reference dependency matrix.	97 LB		$2,519.00
		735027056	Second Hydraulic Front Auxiliary Kit Install Time = 8.0 hours	99 LB		$1,029.00
		735036036	4-Point Lift Hook Kit Install Time = 2.0 hours	20 LB		$222.00
		735037046	Single Point Lift Hook Kit Install Time = 4.0 hours	269 LB		$1,029.00
		735038006	FOPS Level 2 Modification Kit Install Time = 1.0 hours	61 LB		$343.00
		735039066	Extra Counterweight Kit	362 LB		$687.00

NEW HOLLAND CONSTRUCTION

L234 TIER 4 FINAL SKID STEER LOADER
US PRICE LIST

		735042006	Interior Mirror Kit Install Time = 0.5 hours	4 LB		$58.00
		735045046	Foot Control Conversion Kit Install Time = 8.0 hours Converting to Hand&Foot control from Hand (H-pattern) Mechanical control units only.	52 LB		$615.00
		735046046	Hand Control Conversion Kit Install Time = 6.0 hours Convert to Hand (H-pattern) from Hand&Foot Mechanical control only.	76 LB		$824.00
		735047006	120V Block Heater Kit Install Time = 0.5 hours	6 LB		$206.00
		735048006	220V Block Heater Kit Install Time = 0.5 hours	6 LB		$206.00
		735125046	Multi-Function Front Electrical E-H Kit Install Time = 2.0 hours For use with EH control machines.	62 LB		$274.00
		735142006	Cylinder Guard Kit Install Time = 0.5 hours Provides protection to the loader bucket dump/curl cylinders in severe operating conditions.	21 LB		$739.00
		735146016	Three Point Seat Belt	4 LB		$233.00
		735150006	Open Cab Interior Trim Kit For use with Open Cab. Covers interior sides and rear.	25 LB		$372.00
		735153006	High Beam Light Kit 2 additional work lights	11 LB		$199.00
		735158206	HVAC Complete Install Time = 27.7 hours Reference dependency matrix.	396 LB		$2,951.00
		735159126	Heater Complete Kit Install Time = 11.0 hours Reference dependency matrix.	135 LB		$1,374.00
		735160016	Fender Extensions - Large Frame	45 LB		$334.00
		735161016	Heavy Duty Front Lights - Vertical Model Must order supporting bracket (84338448) and two (2) harnesses (84306340) from service parts to complete kit. Does not come with integrated turn signals.	26 LB		$372.00
		735168016	Aspirator (Precleaner) Kit Install Time = 2.0 hours	39 LB		$683.00
		735179006	Lap Bar Kit	40 LB		$600.00

Dirt & Foundry Bucket

		735055016	72" Dirt & Foundry Bucket (1829 mm), 16.2 cu. ft. Heaped Capacity	407 LB		$1,000.00
		735056016	78" Dirt & Foundry Bucket (1981 mm), 17.7 cu. ft. Heaped Capacity	429 LB		$1,038.00

Heavy Duty Dirt Bucket

		735072016	72" Heavy Duty Dirt Bucket (1829 mm), 14.1 cu. ft. Heaped Capacity	501 LB		$1,409.00
		735073016	78" Heavy Duty Dirt Bucket (1981 mm), 15.5 cu. ft. Heaped Capacity	526 LB		$1,538.00

NEW HOLLAND CONSTRUCTION

L234 TIER 4 FINAL SKID STEER LOADER
US PRICE LIST

		735074016	84" Heavy Duty Dirt Bucket (2134 mm), 17.0 cu. ft. Heaped Capacity	550 LB		$1,589.00

Light Material Bucket

		735066016	72" Light Material Bucket (1829 mm), 23.3 cu. ft. Heaped Capacity	466 LB		$841.00
		735067016	84" Light Material Bucket (2134 mm), 17.0 cu. ft. Heaped Capacity	532 LB		$981.00

Low Profile Bucket

		735059016	72" Low Profile Bucket (1829 mm), 14.8 cu. ft. Heaped Capacity	471 LB		$903.00

Low Profile Extended Bucket

		735062016	72" Low Profile Extended Bucket (1829 mm), 17.7 cu. ft. Heaped Capacity	504 LB		$1,004.00
		735063016	78" Low Profile Extended Bucket (1981 mm), 19.1 cu. ft. Heaped Capacity	531 LB		$1,086.00
		735064016	84" Low Profile Extended Bucket (2134 mm), 20.5 cu. ft. Heaped Capacity	607 LB		$1,173.00

Manure-Slurry Bucket

		735069016	72" Manure-Slurry Bucket (1829 mm), 19.1 cu. ft. Heaped Capacity	469 LB		$856.00
		735070016	84" Manure-Slurry Bucket (2134 mm), 22.6 cu. ft. Heaped Capacity	535 LB		$995.00

Pallet Fork

		735075006	Pallet Fork Frame w/48" Tines	540 LB		$1,265.00

SmartFit Teeth

		735184006	72" HDE Bucket w/ Teeth (1829 mm) 17.4 cu. ft. Heaped Capacity	624 LB		$1,692.00
		735185006	78" HDE Bucket w/ Teeth (1981 mm) 18.9 cu. ft. Heaped Capacity	697 LB		$1,898.00
		735186006	84" HDE Bucket w/ Teeth (2134 mm) 20.5 cu. ft. Heaped Capacity	728 LB		$2,032.00

Tires

		735094006	12x16.5 Heavy Duty (70 OTW) RH Kit Galaxy XD2002 Reference Loader Stop matrix. 1 tire assembly.	141 LB		$417.00
		735114006	12x16.5 Heavy Duty (70 OTW) LH Kit Galaxy XD2002 Reference Loader Stop matrix. 1 tire assembly.	141 LB		$417.00
		735172006	RH 14X17.5 HVY DUTY 76OTW Reference Loader Stop matrix. 1 tire assembly.	150 LB		$595.00
		735173006	RH 14X17.5 SVER DUTY76OTW Reference Loader Stop matrix. 1 tire assembly.	187 LB		$809.00
		735175006	LH 14X17.5 HVY DUTY 76OTW Reference Loader Stop matrix. 1 tire assembly.	150 LB		$595.00
		735176006	LH 14X17.5 SVER DUTY76OTW Reference Loader Stop matrix. 1 tire assembly.	187 LB		$809.00

L234 TIER 4 FINAL SKID STEER LOADER
US PRICE LIST

Tweels

		735180006	KIT RH 10X16.5 TWEEL 1 Tweel assembly - RH	178 LB		$750.00
		735181006	KIT LH 10X16.5 TWEEL 1 Tweel Assembly - LH	178 LB		$750.00
		735182006	KIT RH 12X16.5 TWEEL 1 Tweel assembly - RH	226 LB		$850.00
		735183006	KIT LH 12X16.5 TWEEL 1 Tweel Assembly - LH	178 LB		$850.00

U.S. PRICE LIST

COMPACT TRACK LOADER

EFFECTIVE May 22, 2019

Below is a list of Family(s) and Model(s) that are included in this price list.

Compact Track Loader

C227
C232
C234
C237
C245

Copyright 2019 By

CNH Industrial America LLC

INDEX

Compact Track Loader Line Price & Data Pages

EQUIPMENT DESCRIPTION	PAGE
C227	3
C232	18
C234	33
C237	46
C245	60

C227 T4 FINAL COMPACT TRACK LOADER
US PRICE LIST

(Ex Works Wichita, KS)

Standard Equipment

ENGINE:
- FPT F5H FL463A water cooled diesel engine
- 207 CID (3.4 L) Turbo
- Tier 4 Final Certified
- High Pressure Common Rail (HPCR) Fuel Injection
- Horsepower:
  - Gross 74
  - Net 68
- 120 amp alternator
- Air cleaner - dual element
- Anti-freeze solution to -34º F
- Fuel tank - 19.5 gal. (U.S.)
- Particulate Matter Catalyst (PMCat)
- Single Plane, Top and Bottom Oil Cooler/Radiator Configuration
- No maintenance belt
- Glow Plugs
- Maintenance free 1000 CCA battery

OPERATOR'S PROTECTIVE STRUCTURE:
- ROPS/FOPS Level 1 canopy with side screens
- Control lockout system
- Tilt forward ROPS/FOPS
- Electric parking brake control
- Hand throttle
- Foot throttle
- Switchable (ISO - H) Electro Hydraulic Controls
- Operator's compartment floor cleanout
- Rear window with emergency escape
- Padded Arm Rests (EH Controls ONLY)
- Suspension Seat, vinyl with 2" retractable lap seat belt
- Foot rest
- Dome Light
- 12V Power plug socket
- Cup holder
- Tool Pocket
- Top window
- Headliner
- Alarm package (backup and horn)

HYDRAULICS:
- 6 micron oil filtration system
- 3 spool loader control valve
- Auxiliary hydraulics, Proportional thumb wheel activated: loader arm mounted with ISO specification flat face "connect-under-pressure" disconnects
  Including case drain
- Heavy duty hydraulic oil cooler
- Loader arm float position
- Auxiliary hydraulic function lockout override
- Loader arm circuit lockout override

LOADER:
- Mechanical attachment coupler
- Radial arm geometry
- Loader lift arm support strut
- SAE operating load:
  2700 lbs. at 50%
  1890 lbs. at 35%
- Tipping load: 5400 lbs.

INSTRUMENTATION:
- Advanced Instrument Cluster with hour meter, tachometer, fuel gauge, hydraulic oil temperature gauge, engine coolant temperature gauge, diagnostic features and security lock-out
- Warning lights with alarms:
  Critical system stop
  Engine system
  Hydraulic system
  Electrical and diagnostic system
- Warning alarms:
  Battery voltage (plus display)
  DPF
  Oil Service
- Indicator Light:
  Engine preheat, Parking brake, Seat belt reminder

C227 T4 FINAL COMPACT TRACK LOADER
US PRICE LIST

(Ex Works Wichita, KS)

Standard Equipment

TRACK SYSTEM:
- Electro Hydraulic Controlled Hydrostatic 2-speed planetary final drive
- Positive drive imbedded steel rubber track belt
- Spring applied hydraulic release (SAHR) disc parking brake
- Dynamic braking

UNDERCARRIAGE:
- Rigid track frame mounting
- Permanently sealed (duo cone face seal) & lubricated idlers and rollers
- Triple flange lower rollers
- Single flange front and rear idlers
- Hydraulic track adjustment
- Track recoil spring
- Undercarriage Hose Covers

OTHER STANDARD FEATURES:
- Lights - 2 front, 2 rear (halogen)
- Pre-wired for rotating beacon
- Service access hood, lockable
- Steel Hoods & Covers
- Single point daily service
- Tail lights
- Options harness
- Remote Oil and Fuel Filters

C227 T4 FINAL COMPACT TRACK LOADER
US PRICE LIST

(Ex Works Wichita, KS)

Models

COMMERCIAL MODEL	VERSION	MODEL	Weight	Factory Data	List Price
C227-T4B	Tier 4 B Regulated	C227	7,970 LB		$65,001.00

C227 T4 FINAL COMPACT TRACK LOADER
US PRICE LIST

(Ex Works Wichita, KS)

Factory Supplied Options

Order Code	Description	Weight	Factory Data	List Price

PACKAGE

SD_T9999 NEW HOLLAND CTL/SSL PACKAGES

		761609	761609 EH2-Basic-ROPS **E-H CONTROLS#** **E-H CONTROL 2SPD#** **FRONT ELEC/MULTI-FUNC#** **REAR DOOR#** **MANUAL COUPLER#** **OPEN NO HEAT OR HVAC#** **SUSPENSION SEAT#** **STEEL LIGHTS W/ TS#** **BLOCK HEATER 120V-USA#** **LAP BAR#**			($5,500.00)
		761611	761611 EH2-Plus-Cab **E-H CONTROLS#** **E-H CONTROL 2SPD#** **FRONT ELEC/MULTI-FUNC#** **REAR DOOR#** **HYDRAULIC COUPLER#** **HVAC-GLASS DOOR#** **SUSPENSION SEAT#** **STEEL LIGHTS W/ TS#** **BLOCK HEATER 120V-USA#** **LAP BAR#**			($5,500.00)
		761614	761614 EH2-Deluxe-Air Cab **E-H CONTROLS#** **E-H CONTROL 2SPD#** **FRONT ELEC/MULTI-FUNC#** **REAR DOOR#** **HYDRAULIC COUPLER#** **HVAC-GLASS DOOR#** **AIR SUSPENSION SEAT#** **STEEL LIGHTS W/ TS#** **BLOCK HEATER 120V-USA#** **LAP BAR#**			($5,500.00)

C227 T4 FINAL COMPACT TRACK LOADER
US PRICE LIST

(Ex Works Wichita, KS)

		761617	761617 FC2-Basic-ROPS **FOOT CONTROLS** **MECH CONTROL 2SPD** **FRONT ELEC/MULTI-FUNC** **REAR DOOR** **MANUAL COUPLER** **OPEN NO HEAT OR HVAC** **SUSPENSION SEAT** **STEEL LIGHTS W/ TS** **BLOCK HEATER 120V-USA** **LAP BAR**			($5,500.00)
		761619	761619 FC2-Plus-Cab **FOOT CONTROLS#** **MECH CONTROL 2SPD#** **FRONT ELEC/MULTI-FUNC#** **REAR DOOR#** **HYDRAULIC COUPLER#** **HVAC-GLASS DOOR#** **SUSPENSION SEAT#** **STEEL LIGHTS W/ TS#** **BLOCK HEATER 120V-USA#** **LAP BAR#**			($5,500.00)
		761625	761625 FC2-Elite-Air Cab **FOOT CONTROLS#** **MECH CONTROL 2SPD#** **PERF w/FRONT ELEC/MULT-FUNC, SELF LEVEL, RIDE CONTROL** **REAR DOOR#** **HYDRAULIC COUPLER#** **HVAC-GLASS DOOR#** **AIR SUSPENSION SEAT#** **STEEL LIGHTS W/ TS#** **BLOCK HEATER 120V-USA#** **LAP BAR#**			($5,500.00)

C227 T4 FINAL COMPACT TRACK LOADER
US PRICE LIST

(Ex Works Wichita, KS)

		761627	761627 EH2-Limited-Air Cab **E-H CONTROLS#** **E-H CONTROL 2SPD#** **HIGH FLOW PLUS w/ FRONT ELEC./MULTI-FUNC., SELF LEVEL, RIDE** **CONTROL** **HEAVY DUTY REAR DOOR#** **HYDRAULIC COUPLER#** **HVAC-GLASS DOOR#** **AIR SUSPENSION SEAT#** **STEEL LIGHTS W/ TS#** **BLOCK HEATER 120V-USA#** **LAP BAR#**			($5,500.00)
		761632	761632 EH2-Elite-Air Cab **E-H CONTROLS#** **E-H CONTROL 2SPD#** **PERF w/FRONT ELEC/MULTI-FUNC., SELF LEVEL, RIDE CONTROL** **REAR DOOR#** **HYDRAULIC COUPLER#** **HVAC-GLASS DOOR#** **AIR SUSPENSION SEAT#** **STEEL LIGHTS W/ TS#** **BLOCK HEATER 120V-USA#** **LAP BAR#**			($5,500.00)
			y			

CONTROLS AND TRANSMISSION

SD_01100 CONTROLS LEVEL

		761029	2 Speed Mechanical Controls **Available in "H Pattern" Hand Controls or Hand and Foot Controls**			($2,095.00)
		761031	2 Speed E-H Controls **Electro-Hydraulic Switchable (ISO-H Pattern) Controls with Two Speed**			No Charge

SD_01401 DRIVE CONTROL TYPE

		761040	Hand Controls **H Pattern, ONLY Select with Mechanical Controls (761029)**			No Charge
		761041	Hand and Foot Controls **ONLY Select with Mechanical Controls (761029)**			No Charge
		761042	E-H Controls **ONLY Select with E-H Controls (761031)**			No Charge

NEW HOLLAND CONSTRUCTION

C227 T4 FINAL COMPACT TRACK LOADER
US PRICE LIST

(Ex Works Wichita, KS)

ROPS/CAB

SD_05009 CAB

		761043	Open Cab (No Heat or HVAC) **with top window and keyed start**			No Charge
		761045	Enclosed Cab with HVAC **Includes side windows, front glass door with wiper, shoulder belt, radio with speakers and keyless start**			$5,664.00
		761183	Enclosed Cab w/HVAC -Demo Door **Includes side windows, 1/2" polycarbonate (will not shatter like glass), front door with wiper, shoulder belt, radio with speakers, and keyless start**			$7,445.00

SD_05016 OPEN CAB TRIM

		X05016X	No Open Cab Interior Trim Pkg			No Charge
		761186	Open Cab Interior Trim Package **For use with Open Cab. Covers interior sides and rear.**			$310.00

SD_05185 CAB SEAT

		761052	Suspension Seat (Vinyl)			No Charge
		761062	Air Ride Suspension Seat **(Fabric) with temperature control (may not be ordered with Open Cab option 761043)**			$582.00

SD_K5104 LAP BAR-NH

		XK5104X	NO LAP BAR NEW HOLLA **Comes with seat belt only. Seat belt must be engaged for machine operation.**			($265.00)
		761224	LAP BAR NEW HOLLAND **Lap Bar Installed from Factory.** **Seat belt included. Sensor moved from seat belt to the lap bar for machine operation (lap bar must be down to operate).**			No Charge

COUPLER

SD_K5101 COUPLERS

		726003	Manual Coupler			No Charge
		726004	Hydraulic Coupler			$1,027.00

C227 T4 FINAL COMPACT TRACK LOADER
US PRICE LIST

(Ex Works Wichita, KS)

BLOCK HEATER

SD_02086 BLOCK HEATER

		761048	Block Heater (120V)			No Charge

TURN SIGNALS

SD_06056 EXTERIOR LIGHTS

		463739	STEEL LIGHTS WITH TURN SIGNALS			No Charge

OPERATORS MANUAL

SD_32035 LANGUAGE OPTIONS

		761085	English			No Charge
		761088	French			No Charge
		761097	Spanish			No Charge

OPTIONAL PACKAGES

SD_01201 OPTION PACKAGES

		761034	Front Electric/Multi-Function **Contain Front Electric (Multi-function) for Standard Auxiliaries**			No Charge
		761035	Performance w/Front Electric **Contains ON/OFF One-Way Self Leveling, Ride Control, and Multi-Function Electric Control**			$1,172.00
		761036	High Flow Package **Contains High Flow Hydraulics with Multi-Function Electric Control**			$1,874.00
		761037	High Flow Plus Package **Contains Multi-Function, High Flow Hydraulics, ON/OFF One-way Self Leveling and Glide Ride**			$3,047.00

TRACK BELT OPTIONS

SD_10015 TRACK OPTIONS

		8500117	320 mm (12.6 inch) **Standard Duty rail type track with zig zag tread pattern 86 Pitch, 67" OTW**			No Charge

NEW HOLLAND CONSTRUCTION

C227 T4 FINAL COMPACT TRACK LOADER
US PRICE LIST

(Ex Works Wichita, KS)

		8500167	320 BELT HD **Heavy Duty rail type track with HH tread pattern** **12.6", 67" OTW** **86 Pitch**			$398.00

FRONT ATTACHMENTS

BUCKETS

SD_K5231 BUCKETS

		XK5231X	No Bucket			No Charge
		Dirt & Foundry Bucket				
		761125	72" Dirt & Foundry Bucket **(1829 mm), 16.7 cu. ft. Heaped Capacity**			$1,000.00
		761126	78" Dirt & Foundry Bucket **(1981 mm), 18.4 cu. ft. Heaped Capacity**			$1,038.00
		Heavy Duty Dirt Bucket				
		761142	72" Heavy Duty Dirt Bucket **(1829 mm), 14.6 cu. ft. Heaped Capacity**			$1,409.00
		761143	78" Heavy Duty Dirt Bucket **(1981 mm), 15.9 cu. ft. Heaped Capacity**			$1,538.00
		Light Material Bucket				
		761136	72" Light Material Bucket **(1829 mm), 23.7 cu. ft. Heaped Capacity**			$897.00
		761137	84" Light Material Bucket **(2134 mm), 27.9 cu. ft. Heaped Capacity**			$1,047.00
		Low Profile Extended Bucket				
		761132	72" Low Profile Extended **(1829 mm), 17.1 cu. ft. Heaped Capacity**			$1,004.00
		761133	78" Low Profile Extended **(1981 mm), 18.6 cu. ft. Heaped Capacity**			$1,086.00
		761134	84" Low Profile Extended **(2134 mm), 20.2 cu. ft. Heaped Capacity**			$1,173.00
		Manure & Slurry Bucket				
		761139	72" Manure-Slurry Bucket **(1829 mm), 19.1 cu. ft. Heaped Capacity**			$856.00
		761140	84" Manure-Slurry Bucket **(2134 mm), 22.5 cu. ft. Heaped Capacity**			$995.00
		Low Profile Bucket				
		761129	72" Low Profile Bucket **(1829 mm), 14.5 cu. ft. Heaped Capacity**			$903.00
		SmartFit Teeth				
		761254	72" HD Ext. w/ SmartFit Teeth **(1829 mm) 17.4 cu. ft. Heaped Capacity**			$1,692.00
		761255	78" HD Ext. w/ SmartFit Teeth **(1981 mm) 18.9 cu. ft. Heaped Capacity**			$1,898.00

C227 T4 FINAL COMPACT TRACK LOADER
US PRICE LIST

(Ex Works Wichita, KS)

		761256	84" HD Ext. w/ SmartFit Teeth **(2134 mm) 20.5 cu. ft.**			$2,032.00

BOLT ON CUTTING EDGE

SD_K6399 BOLT ON CUTTING EDGE

		XK6399X	No Bolt on Cutting Edge			No Charge
		761147	72" Bolt on Cutting Edge			$241.00
		761148	78" Bolt on Cutting Edge			$259.00

MOVE TO BIC

SPECIAL PAINT

SD_50103 SPECIAL PAINT

		X50103X	No Special Paint			No Charge
		726029	Special Paint **The price listed is for a color change only from the standard factory color: CNH #86572648 (NH-Yellow). All Special Color formulations will be applied using approved factory processes and materials. Metallic or other special formulations and/or materials are not available. A color chip must be provided to CNH for non CNH colors. A minimum lead time of 8 business weeks will be required prior to production. Unless specified, regular production decals will be applied. Requests can be made that decals not be applied. However, SAFETY decals MUST BE APPLIED in all cases. The following components remain CNH grey: lift & bucket cylinders, front coupler and attachments, ROPS, side screens, upper chassis and control links, undercarriages and brackets, and rear door.**			$2,999.00

TELEMATICS

SD_39021 REAR DOOR

		761075	Rear Door			No Charge

C227 T4 FINAL COMPACT TRACK LOADER
US PRICE LIST

(Ex Works Wichita, KS)

		761205	Heavy Duty Rear Door			$440.00

SD_K6450 TELEMATICS

		XK6450X	No Telematics			No Charge
		761198	NH FleetForce On-board **Unit comes factory fit with wiring and modem.** **To order the Service Subscription contact Service Parts.**			$816.00

C227 T4 FINAL COMPACT TRACK LOADER
US PRICE LIST

(Ex Works Wichita, KS)

Factory Supplied Attachments

Order Code			Description	Weight	Factory Data	List Price
Basic Attachments						
		735030006	Heavy Duty Rear Door Kit Install Time = 0.5 hours	32 LB		$308.00
		735006006	Beacon Kit Install Time = 0.2 hours	1 LB		$154.00
		735007006	4-Corner LED Strobe Kit Install Time = 0.5 hours Reference dependency matrix.	24 LB		$500.00
		735159046	Heater Complete Kit Install Time = 11.0 hours For use with TIER 4 ONLY Reference dependency matrix.	141 LB		$1,374.00
		735158106	HVAC Complete Kit Install Time = 28.0 hours For use with TIER 4 ONLY Reference dependency matrix.	332 LB		$2,951.00
		735146016	Three Point Seat Belt Install Time = 1.0 hours	4 LB		$233.00
		735011006	Glass Front Door Kit Install Time = 2.0 hours Center mounted wiper. Requires three point seat belt. Must order applicable harness. Reference dependency matrix.	182 LB		$1,543.00
		735012006	Demo Front Door Kit Install Time = 2.0 hours 1/2" polycarbonate door (will not shatter like glass) Center Mounted wiper Requires three point seat belt. Must order applicable harness. Reference dependency matrix.	182 LB		$2,711.00
		735013006	Cab Side Windows Kit Install Time = 1.0 hours	139 LB		$865.00
		735016006	Radio Kit Install Time = 4.0 hours Reference dependency matrix.	16 LB		$413.00
		735150006	Open Cab Interior Trim Kit Install Time = 1.0 hours	25 LB		$372.00
		735020046	Road Light Kit Install Time = 2.5 hours Added front lights with turn signals that mount on the loader booms. Added rear lights with signals. (Reference image in SSL/CTL Brochure)	22 LB		$608.00
		735021006	Multi-Function Front Electrical Mech Kit Install Time = 2.0 hours For Mech machines. Reference Dependency Matrix for additional component requirements.	11 LB		$274.00
		735125006	Multi-Function Front Electrical E-H Kit Install Time = 2.0 hours For EH Control machines.	11 LB		$274.00

C227 T4 FINAL COMPACT TRACK LOADER
US PRICE LIST

(Ex Works Wichita, KS)

		735022046	One Way Self Level Kit Install Time = 4.0 hours	15 LB		$485.00
		735023006	Ride Control Kit Install Time = 4.0 hours	33 LB		$481.00
		735024006	Hydraulic Coupler Kit Install Time = 8.0 hours Reference dependency matrix. For converting mechanical coupler to hydraulic coupler.	50 LB		$1,236.00
		735025076	High Flow Auxiliary Kit Install Time = 5.0 hours For use with TIER 4 models ONLY. Reference dependency matrix.	191 LB		$2,519.00
		735027016	Second Hydraulic Front Auxiliary Kit Install Time = 8.0 hours	81 LB		$1,029.00
		735029036	Battery Disconnect Kit Install Time = 2.0 hours	2 LB		$151.00
		735037016	Single Point Lift Hook Kit Install Time = 4.0 hours	284 LB		$1,029.00
		735038006	FOPS Level 2 Modification Kit Install Time = 1.0 hours	61 LB		$343.00
		735039056	Extra Counterweight Kit Install Time = 0.5 hours	202 LB		$412.00
		735040146	Aspirator (Precleaner) Kit Install Time = 2.0 hours For use with Tier 4	14 LB		$319.00
		735042006	Interior Mirror Kit Install Time = 0.5 hours	4 LB		$58.00
		735045046	Foot Control Conversion Kit Install Time = 8.0 hours For use with TIER 4 ONLY. Converting to Hand&Foot from Hand (H-Pattern).	52 LB		$615.00
		735046046	Hand Control Conversion Kit Install Time = 6.0 hours For use with TIER 4 ONLY. Converting to Hand (H-Pattern) from Hand&Foot.	76 LB		$824.00
		735047006	120V Block Heater Kit Install Time = 0.5 hours	6 LB		$206.00
		735048006	220V Block Heater Kit Install Time = 0.5 hours	6 LB		$206.00
		735142006	Cylinder Guard Kit Install Time = 0.5 hours Provides protection to the loader bucket dump/curl cylinders in severe operating conditions.	21 LB		$739.00
		735153006	High Beam Light Kit Install Time = 1.0 hours Two added front lights; mounted inward of the standard front lights. Adding this kit would yield: four front lights along with turn signals (if already equipped with signals). Reference image in SSL/CTL Brochure.	11 LB		$199.00
		735022136	Kit Self-Level	30 LB		$286.00

NEW HOLLAND CONSTRUCTION

C227 T4 FINAL COMPACT TRACK LOADER
US PRICE LIST

(Ex Works Wichita, KS)

		735161016	Heavy Duty Front Lights - Vertical Model Must order supporting bracket (84338448) and two (2) harnesses (84306340) from service parts to complete kit.	26 LB		$372.00
		735163036	KIT, HEAVY DUTY REAR DOOR	141 LB		$308.00
		735178026	Rediator Debris Kit Install Time = 4.0 hours To prevent large foreign material from damaging the radiator.	10 LB		$333.00
		735179006	Lap Bar Kit Install Time = 2.0 hours	40 LB		$600.00

Pallet Forks

		735075006	Pallet Fork Frame w/48" Tines	540 LB		$1,265.00

Dirt & Foundry Bucket

		735055016	72" Dirt & Foundry Bucket (1829 mm), 16.2 cu. ft. Heaped Capacity	407 LB		$1,000.00
		735056016	78" Dirt & Foundry Bucket (1981 mm), 17.7 cu. ft. Heaped Capacity	429 LB		$1,038.00

Low Profile Bucket

		735059016	72" Low Profile Bucket (1829 mm), 14.8 cu. ft. Heaped Capacity	471 LB		$903.00

Low Profile Extended Bucket

		735062016	72" Low Profile Extended Bucket (1829 mm), 17.7 cu. ft. Heaped Capacity	504 LB		$1,004.00
		735063016	78" Low Profile Extended Bucket (1981 mm), 19.1 cu. ft. Heaped Capacity	531 LB		$1,086.00
		735064016	84" Low Profile Extended Bucket (2134 mm), 20.5 cu. ft. Heaped Capacity	607 LB		$1,173.00

Light Material Bucket

		735066016	72" Light Material Bucket (1829 mm), 23.3 cu. ft. Heaped Capacity	466 LB		$841.00
		735067016	84" Light Material Bucket (2134 mm), 27.5 cu. ft. Heaped Capacity	532 LB		$981.00

Manure & Slurry Bucket

		735069016	72" Manure-Slurry Bucket (1829 mm), 19.1 cu. ft. Heaped Capacity	469 LB		$856.00
		735070016	84" Manure-Slurry Bucket (2134 mm), 22.6 cu. ft. Heaped Capacity	535 LB		$995.00

Heavy Duty Dirt Bucket

		735072016	72" Heavy Duty Dirt Bucket (1829 mm), 14.1 cu. ft. Heaped Capacity	501 LB		$1,409.00
		735073016	78" Heavy Duty Dirt Bucket (1981 mm), 15.5 cu. ft. Heaped Capacity	526 LB		$1,538.00
		735074016	84" Heavy Duty Dirt Bucket (2134 mm), 17.0 cu. ft. Heaped Capacity	550 LB		$1,589.00

C227 T4 FINAL COMPACT TRACK LOADER
US PRICE LIST

(Ex Works Wichita, KS)

SmartFit Teeth

		735184006	72" HDE Bucket w/ Teeth (1829 mm) 17.4 cu. ft. Heaped Capacity	624 LB		$1,692.00
		735185006	78" HDE Bucket w/ Teeth (1981 mm) 18.9 cu. ft. Heaped Capacity	697 LB		$1,898.00
		735186006	84" HDE Bucket w/ Teeth (2134 mm) 20.5 cu. ft. Heaped Capacity	728 LB		$2,032.00

C232 T4 FINAL COMPACT TRACK LOADER
US PRICE LIST

Standard Equipment

ENGINE:
- FPT F5H FL463H water cooled diesel engine
- 207 CID (3.4 L) Turbo
- Tier 4 Final Certified
- High Pressure Common Rail (HPCR) Fuel Injection
- Charged Air Cooler (CAC)
- Horsepower:
  - Gross 74
  - Net 68
  - Peak torque 232 lb*ft (314 Nm)
- 120 amp alternator
- Air cleaner – dual element
- Organic Acid Technology (OAT)
- Diesel Oxidation Catalyst
- Anti-freeze solution to -34° F
- Fuel tank - 25.5 gal. (U.S.)
- 3-stack after cooler / radiator / Oil cooler configuration
- Maintenance-Free Belt
- Glow Plugs
- Maintenance free 1000 CCA battery

OPERATOR'S PROTECTIVE STRUCTURE:
- ROPS/FOPS Level 1 canopy with side screens
- Control lockout system
- Tilt forward ROPS/FOPS
- Electric parking brake control
- Hand throttle and Foot throttle
- Switchable (ISO - H) Electro Hydraulic Controls (only on EH models)
- Operator's compartment floor cleanout
- Rear window with emergency escape
- Padded Arm Rests (EH Controls ONLY)
- Suspension Seat, vinyl with 2" retractable lap seat belt
- Foot rest
- Dome Light
- 12V Power plug socket
- Cup holder

OPERATOR'S PROTECTIVE STRUCTURE (Continued):
- Tool Pocket
- Top window
- Headliner
- Alarm package (backup and horn)

HYDRAULICS:
- 6 micron oil filtration system
- 3 spool loader control valve
- Auxiliary hydraulics, Proportional thumb wheel activated: loader arm mounted with ISO specification flat face "connect-under-pressure" disconnects Including case drain
- Heavy duty hydraulic oil cooler
- Loader arm float position
- Auxiliary hydraulic function lockout override
- Loader arm circuit lockout override

LOADER:
- Mechanical attachment coupler
- Vertical Lift SUPERBOOM Geometry
- In-Cab Boom Locks
- SAE operating load:
  - For C232:
    - 3200 lbs. at 50%
    - 2240 lbs. at 35%
    - Tipping load: 6400 lbs.

C232 T4 FINAL COMPACT TRACK LOADER
US PRICE LIST

Standard Equipment

INSTRUMENTATION:
- Advanced Instrument Cluster with hour meter, tachometer, fuel gauge, hydraulic oil temperature gauge, engine coolant temperature gauge, diagnostic features and security lock-out
- Warning lights with alarms:
  - Critical system stop
  - Engine system
  - Hydraulic system
  - Electrical and diagnostic system
- Warning alarms:
  - Battery voltage (plus display)
  - DPF
  - Oil Service
- Indicator Light:
  - Engine preheat, Parking brake, Seat belt reminder

TRACK SYSTEM:
- Electro Hydraulic Controlled Hydrostatic 2-speed planetary final drive
- Positive drive imbedded steel rubber track belt
- Spring applied hydraulic release (SAHR) disc parking brake
  - Dynamic braking

UNDERCARRIAGE:
- Rigid track frame mounting
- Permanently sealed (duo cone face seal) & lubricated idlers and rollers
- Triple flange lower rollers
- Single flange front and rear idlers
- Hydraulic track adjustment
- Track recoil spring
- Undercarriage Hose Covers

OTHER STANDARD FEATURES:
- Lights - 2 front, 2 rear (halogen)
- Pre-wired for rotating beacon
- Service access hood, lockable
- Steel Hoods & Covers
- Single point daily service
- Tail lights
- Options harness (only on EH models)
- Remote Oil and Fuel Filters
- Debris Ingression Prevention Sealing

C232 T4 FINAL COMPACT TRACK LOADER
US PRICE LIST

Models

COMMERCIAL MODEL	VERSION	MODEL	Weight	Factory Data	List Price
C232 T4 FINAL	Tier 4 B Regulated	C232	9,630 LB		$75,267.00

C232 T4 FINAL COMPACT TRACK LOADER
US PRICE LIST

Factory Supplied Options

Order Code	Description	Weight	Factory Data	List Price

PACKAGE

SD_T9999 NEW HOLLAND CTL/SSL PACKAGES

		761609	761609 EH2-Basic-ROPS **E-H CONTROLS#** **E-H CONTROL 2SPD#** **FRONT ELEC/MULTI-FUNC#** **REAR DOOR#** **MANUAL COUPLER#** **OPEN NO HEAT OR HVAC#** **SUSPENSION SEAT#** **STEEL LIGHTS W/ TS#** **BLOCK HEATER 120V-USA#** **LAP BAR#**			($6,000.00)
		761612	761612 EH2-Plus-Cab **E-H CONTROLS#** **E-H CONTROL 2SPD#** **FRONT ELEC/MULTI-FUNC#** **REAR DOOR#** **HEAVY DUTY HYDRAULIC COUPLER#** **HVAC-GLASS DOOR#** **SUSPENSION SEAT#** **STEEL LIGHTS W/ TS#** **BLOCK HEATER 120V-USA#** **LAP BAR#**			($6,000.00)
		761615	761615 EH2-Deluxe-Air Cab **E-H CONTROLS#** **E-H CONTROL 2SPD#** **FRONT ELEC/MULTI-FUNC#** **REAR DOOR#** **HEAVY DUTY HYDRAULIC COUPLER#** **HVAC-GLASS DOOR#** **AIR SUSPENSION SEAT#** **STEEL LIGHTS W/ TS#** **BLOCK HEATER 120V-USA#** **LAP BAR#**			($6,000.00)

C232 T4 FINAL COMPACT TRACK LOADER
US PRICE LIST

		761617	761617 FC2-Basic-ROPS **FOOT CONTROLS#** **MECH CONTROL 2SPD#** **FRONT ELEC/MULTI-FUNC#** **REAR DOOR#** **MANUAL COUPLER#** **OPEN NO HEAT OR HVAC#** **SUSPENSION SEAT#** **STEEL LIGHTS W/ TS#** **BLOCK HEATER 120V-USA#** **LAP BAR#**			($6,000.00)
		761620	761620 FC2-Plus-Cab **FOOT CONTROLS#** **MECH CONTROL 2SPD#** **FRONT ELEC/MULTI-FUNC#** **REAR DOOR#** **HEAVY DUTY HYDRAULIC COUPLER#** **HVAC-GLASS DOOR#** **SUSPENSION SEAT#** **STEEL LIGHTS W/ TS#** **BLOCK HEATER 120V-USA#** **LAP BAR#**			($6,000.00)
		761623	761623 FC2-Deluxe-Air Cab **FOOT CONTROLS#** **MECH CONTROL 2SPD#** **FRONT ELEC/MULTI-FUNC#** **REAR DOOR#** **HEAVY DUTY HYDRAULIC COUPLER#** **HVAC-GLASS DOOR#** **AIR SUSPENSION SEAT#** **STEEL LIGHTS W/ TS#** **BLOCK HEATER 120V-USA#** **LAP BAR#**			($6,000.00)
		761628	761628 EH2-Limited-Air Cab **E-H CONTROLS** **E-H CONTROL 2SPD** **HIGH FLOW PLUS w/ HIGH FLOW HYDRAULICS, SELF LEVELING,** **RIDE CONTROL** **HEAVY DUTY REAR DOOR** **HEAVY DUTY HYDRAULIC COUPLER** **HVAC-GLASS DOOR** **AIR SUSPENSION SEAT** **STEEL LIGHTS W/ TS** **BLOCK HEATER 120V-USA** **LAP BAR**			($6,000.00)

C232 T4 FINAL COMPACT TRACK LOADER
US PRICE LIST

		761631	761631 FC2-Limited-Air Cab **FOOT CONTROLS** **MECH CONTROL 2SPD** **HIGH FLOW PLUS w/ FRONT ELEC/MULTI-FUNC, SELF LEVEL, RIDE** **CONTROL** **HEAVY DUTY REAR DOOR** **HEAVY DUTY HYDRAULIC COUPLER** **HVAC-GLASS DOOR** **AIR SUSPENSION SEAT** **STEEL LIGHTS W/ TS** **BLOCK HEATER 120V-USA** **LAP BAR**			($6,000.00)
		761633	761633 EH2-Elite-Air Cab **E-H CONTROLS#** **E-H CONTROL 2SPD#** **PERF w/FRONT ELEC/MULTI-FUNC, SELF LEVEL, RIDE CONTROL** **REAR DOOR#** **HEAVY DUTY HYDRAULIC COUPLER#** **HVAC-GLASS DOOR#** **AIR SUSPENSION SEAT#** **STEEL LIGHTS W/ TS#** **BLOCK HEATER 120V-USA#** **LAP BAR#**			($6,000.00)
		761636	761636 EH2-Limited HF Air Cab **E-H CONTROLS** **E-H CONTROL 2SPD** **HIGH FLOW with FRONT ELEC./MULTI-FUNC.** **HEAVY DUTY REAR DOOR** **REINFORCED HYDRAULIC COUPLER** **HVAC-GLASS DOOR** **AIR SUSPENSION SEAT** **STEEL LIGHTS W/ TS** **BLOCK HEATER 120V-USA** **LAP BAR#**			($6,000.00)

CONTROLS AND TRANSMISSION

SD_01100 CONTROLS LEVEL

		761029	2 Speed Mechanical Controls **Available in "H Pattern" Hand Controls or Hand and Foot Controls**			($2,095.00)

NEW HOLLAND CONSTRUCTION

C232 T4 FINAL COMPACT TRACK LOADER
US PRICE LIST

		761031	2 Speed E-H Controls **Electro-Hydraulic Switchable (ISO-H Pattern) Controls with Two Speed**			No Charge

SD_01401 DRIVE CONTROL TYPE

		761040	Hand Controls **H Pattern, ONLY Select with Mechanical Controls (761029).**			No Charge
		761041	Hand and Foot Controls **ONLY Select with Mechanical Controls (761029).**			No Charge
		761042	E-H Controls **ONLY Select with E-H Control Package (761031).**			No Charge

ROPS/CAB

SD_05009 CAB

		761043	Open Cab (No Heat or HVAC) **with top window and keyed start**			No Charge
		761045	Enclosed Cab with HVAC **Includes side windows, front glass door with wiper, shoulder belt, radio with speakers and keyless start**			$5,664.00
		761183	Enclosed Cab w/HVAC -Demo Door **Includes side windows, 1/2" polycarbonate (will not shatter like glass), front door with wiper, shoulder belt, radio with speakers, and keyless start**			$7,445.00

SD_05016 OPEN CAB TRIM

		X05016X	No Open Cab Interior Trim Pkg			No Charge
		761186	Open Cab Interior Trim Package **For use with Open Cab. Covers interior sides and rear.**			$310.00

SD_05185 CAB SEAT

		761052	Suspension Seat (Vinyl)			No Charge
		761062	Air Ride Suspension Seat **(Fabric) with temperature control (may not be ordered with Open Cab option 761043**			$582.00

SD_K5104 LAP BAR-NH

		XK5104X	NO LAP BAR NEW HOLLA **Comes with seat belt only. Seat belt must be engaged for machine operation.**			($265.00)
		761224	LAP BAR NEW HOLLAND **Lap Bar Installed from Factory.** **Seat belt included. Sensor moved from seat belt to the lap bar for machine operation (lap bar must be down to operate).**			No Charge

NEW HOLLAND CONSTRUCTION

C232 T4 FINAL COMPACT TRACK LOADER
US PRICE LIST

COUPLER

SD_K5101 COUPLERS

		726003	Manual Coupler			($1,094.00)
		761206	Heavy Duty Hydraulic Coupler			No Charge

BLOCK HEATER

SD_02086 BLOCK HEATER

		761048	Block Heater (120V)			No Charge

TURN SIGNALS

SD_06056 EXTERIOR LIGHTS

		463739	STEEL LIGHTS WITH TURN SIGNALS			No Charge

OPERATORS MANUAL

SD_32035 LANGUAGE OPTIONS

		761085	English			No Charge
		761088	French			No Charge
		761097	Spanish			No Charge

OPTIONAL PACKAGES

SD_01201 OPTION PACKAGES

		761034	Front Electric/Multi-Function **Contain Front Electric (Multi-function) for Standard Auxiliaries**			No Charge
		761035	Performance w/Front Electric **Contains ON/OFF One-Way Self Leveling, Ride Control, and Multi-Function Electric Control**			$1,172.00
		761036	High Flow Package **Contains High Flow Hydraulics with Multi-Function Electric Control**			$1,874.00
		761037	High Flow Plus Package **Contains Multi-Function, High Flow Hydraulics, ON/OFF One-way Self Leveling and Glide Ride**			$3,047.00

NEW HOLLAND CONSTRUCTION

C232 T4 FINAL COMPACT TRACK LOADER
US PRICE LIST

TRACK BELT OPTIONS

SD_10015 TRACK OPTIONS

		8500147	450 mm (17.7 inch) **Standard Duty rail type track with zig zag tread pattern** **78" OTW** **100 Pitch**			No Charge
		8500187	450 BELT HD **Heavy Duty rail type track with HH tread pattern** **78" OTW** **100 Pitch**			$398.00

FRONT ATTACHMENTS

BUCKETS

SD_K5231 BUCKETS

		XK5231X	No Bucket			No Charge
		Dirt & Foundry Bucket				
		761126	78" Dirt & Foundry Bucket **(1981 mm), 18.4 cu. ft. Heaped Capacity**			$1,038.00
		Low Profile Extended				
		761133	78" Low Profile Extended **(1981 mm), 18.6 cu. ft. Heaped Capacity**			$1,086.00
		761134	84" Low Profile Extended **(2134 mm), 20.2 cu. ft. Heaped Capacity**			$1,173.00
		Light Material Bucket				
		761137	84" Light Material Bucket **(2134 mm), 27.9 cu. ft. Heaped Capacity**			$1,047.00
		Manure-Slurry Bucket				
		761140	84" Manure-Slurry Bucket **(2134 mm), 22.5 cu. ft. Heaped Capacity**			$995.00
		Heavy Duty Dirt Bucket				
		761143	78" Heavy Duty Dirt Bucket **(1981 mm), 15.9 cu. ft. Heaped Capacity**			$1,538.00
		761144	84" Heavy Duty Dirt Bucket **(2134 mm), 19.4 cu. ft. Heaped Capacity**			$1,589.00
		SmartFit Teeth				
		761255	78" HD Ext. w/ SmartFit Teeth **(1981 mm) 18.9 cu. ft. Heaped Capacity**			$1,898.00
		761256	84" HD Ext. w/ SmartFit Teeth **(2134 mm) 20.5 cu. ft. Heaped Capacity**			$2,032.00

C232 T4 FINAL COMPACT TRACK LOADER
US PRICE LIST

BOLT ON CUTTING EDGE

SD_K6399 BOLT ON CUTTING EDGE

		XK6399X	No Bolt on Cutting Edge			No Charge
		761148	78" Bolt on Cutting Edge			$259.00
		761149	84" Bolt on Cutting Edge			$279.00

ADDITIONAL EQUIPMENT

SD_39021 REAR DOOR

		761075	Rear Door			No Charge
		761205	Heavy Duty Rear Door			$440.00

MOVE TO BIC

SPECIAL PAINT

SD_50103 SPECIAL PAINT

		X50103X	No Special Paint			No Charge

C232 T4 FINAL COMPACT TRACK LOADER
US PRICE LIST

		726029	Special Paint **The price listed is for a color change only from the standard factory color: CNH #86572648 (NH-Yellow). All Special Color formulations will be applied using approved factory processes and materials. Metallic or other special formulations and/or materials are not available. A color chip must be provided to CNH for non CNH colors. A minimum lead time of 8 business weeks will be required prior to production. Unless specified, regular production decals will be applied. Requests can be made that decals not be applied. However, SAFETY decals MUST BE APPLIED in all cases. The following components remain CNH grey: lift & bucket cylinders, front coupler and attachments, ROPS, side screens, upper chassis and control links, undercarriages and brackets, and rear door.**			$2,999.00

TELEMATICS

SD_K6450 TELEMATICS

		XK6450X	No Telematics			No Charge
		761198	NH FleetForce On-board **Unit comes factory fit with wiring and modem.** **To order the Service Subscription contact Service Parts.**			$816.00

NEW HOLLAND CONSTRUCTION

C232 T4 FINAL COMPACT TRACK LOADER
US PRICE LIST

Factory Supplied Attachments

Order Code			Description	Weight	Factory Data	List Price
Basic Attachments						
		735006006	Beacon Kit Install Time = 0.2 hours	1 LB		$154.00
		735007006	4-Corner LED Strobe Kit Install Time = 0.5 hours Reference dependency matrix.	24 LB		$500.00
		735011006	Glass Front Door Kit Install Time = 2.0 hours Center mounted wiper Required three point seat belt Must order applicable harness. Reference dependency matrix.	182 LB		$1,543.00
		735012006	Demo Front Door Kit Install Time = 2.0 hours 1/2" polycarbonate door (will not shatter like glass) Center Mounted wiper Requires three point seat belt. Must order applicable harness. Reference dependency matrix.	182 LB		$2,711.00
		735013006	Cab Side Windows Kit Install Time = 1.0 hours	139 LB		$865.00
		735016006	Radio Kit Install Time = 4.0 hours Reference dependency matrix.	16 LB		$413.00
		735019106	KIT, TURN SIGNAL Plastic lights	7 LB		$247.00
		735020166	KIT ROAD LIGHTS	32 LB		$606.00
		735021016	Multi-Function Front Electrical Mech Kit Install Time = 2.0 hours C232: NR, Tier 4A and Tier 4B - Mechanical control machines only. C237: Tier 4B - Mechanical and EH control machines. Reference Dependency Matrix for additional component requirements.	11 LB		$274.00
		735022106	Kit Self-Level	30 LB		$451.00
		735023006	Ride Control Kit Install Time = 4.0 hours	33 LB		$481.00
		735024046	Hydraulic Coupler Kit Install Time = 8.0 hours For use with C232 units built AFTER S/N 470977 and C238 units built AFTER S/N 450583 Reference dependency matrix. For converting mechanical coupler to hydraulic coupler.	152 LB		$1,236.00
		735025066	High Flow Auxiliary Kit Install Time = 5.0 hours For use with TIER 4 models ONLY. Reference dependency matrix.	191 LB		$2,519.00
		735027056	Second Hydraulic Front Auxiliary Kit Install Time = 8.0 hours	99 LB		$1,029.00
		735029026	Battery Disconnect Kit Install Time = 2.0 hours	2 LB		$151.00

C232 T4 FINAL COMPACT TRACK LOADER
US PRICE LIST

		735030006	Heavy Duty Rear Door Kit Install Time = 0.5 hours Rear door insert	32 LB		$308.00
		735036026	4-Point Lift Hook Kit Install Time = 1.0 hours For use on C232 NR, Tier 4A and Tier 4B machines and C238 NR and Tier4A machines. C238 Tier 4B machines must order kit 735036036	11 LB		$238.00
		735037046	Single Point Lift Hook Kit Install Time = 4.0 hours	269 LB		$1,029.00
		735038006	FOPS Level 2 Modification Kit Install Time = 1.0 hours	61 LB		$343.00
		735039076	Extra Counterweight Kit Install Time = 0.5 hours	659 LB		$1,168.00
		735040136	Aspirator Kit Install Time = 2.0 hours Tier 4 ONLY.	14 LB		$317.00
		735042006	Interior Mirror Kit Install Time = 0.5 hours	4 LB		$58.00
		735045046	Foot Control Conversion Kit Install Time = 8.0 hours For use with TIER 4 ONLY. Converting to Hand&Foot from Hand (H-Pattern).	52 LB		$615.00
		735045086	Foot Control Conversion Kit Install Time = 8.0 hours For use with Tier 4 models ONLY. Effective on units built prior to S/N NFM419274. Converting to Hand&Foot from Hand (H-Pattern). Not available for units equipped with Electro Hydraulic (EH) controls.	55 LB		$700.00
		735046016	Hand Control Conversion Kit Install Time = 6.0 hours For use with TIER 3 ONLY. Converting to Hand (H-Pattern) from Hand&Foot.	76 LB		$824.00
		735046066	Hand Control Conversion Kit Install Time = 6.0 hours For use with Tier 4A units AFTER S/N NDM471007 (C232) and NDM470304 (C238). Converting to Hand (H-Pattern) from Hand&Foot.	76 LB		$824.00
		735046076	Hand Control Conversion Kit Install Time = 6.0 hours Converting to Hand (H-Pattern) from Hand&Foot. Not available for units equipped with Electro Hydraulic (EH) controls.	76 LB		$750.00
		735047006	120V Block Heater Kit Install Time = 0.5 hours	6 LB		$206.00
		735048006	220V Block Heater Kit Install Time = 0.5 hours	6 LB		$206.00
		735125016	Multi-Function Front Electrical E-H Kit Install Time = 2.0 hours For Use in EH control machines C232: NR, Tier 4A and Tier 4B	11 LB		$274.00

NEW HOLLAND CONSTRUCTION

C232 T4 FINAL COMPACT TRACK LOADER
US PRICE LIST

		735142006	Cylinder Guard Kit Install Time = 0.5 hours Provides protection to the loader bucket dump/curl cylinders in severe operating conditions.	21 LB		$739.00
		735146016	Three Point Seat Belt Install Time = 1.0 hours	4 LB		$233.00
		735150006	Open Cab Interior Trim Kit Install Time = 1.0 hours	25 LB		$372.00
		735153006	High Beam Light Kit Install Time = 1.0 hours Two added front lights; mounted inward of the standard front lights. Adding this kit would yield: four front lights along with turn signals (if already equipped with signals). Reference image in SSL/CTL Brochure.	11 LB		$199.00
		735158136	HVAC Complete Install Time = 28.0 hours	382 LB		$2,951.00
		735159046	Heater Complete Kit Install Time = 11.0 hours For use with TIER 4 ONLY Must order applicable harness. Reference dependency matrix.	141 LB		$1,374.00
		735160016	Fender Extensions - Large Frame Install Time = 1.5 hours	45 LB		$334.00
		735161016	Heavy Duty Front Lights - Vertical Model For use with vertical models. Must order supporting bracket (84338448) and two (2) harnesses (84306340) from service parts to complete kit. Does not include interated turn signals.	26 LB		$372.00
		735178036	Radiator Debris Kit Install Time = 1.0 hours To prevent large foreign material from damaging the radiator.	10 LB		$333.00
		735179006	Lap Bar Kit Install Time = 2.0 hours	40 LB		$600.00

Dirt & Foundry Bucket

		735056016	78" Dirt & Foundry Bucket (1981 mm), 17.7 cu. ft. Heaped Capacity	429 LB		$1,038.00

Heavy Duty Dirt Bucket

		735073016	78" Heavy Duty Dirt Bucket (1981 mm), 15.5 cu. ft. Heaped Capacity	526 LB		$1,538.00
		735074016	84" Heavy Duty Dirt Bucket (2134 mm), 17.0 cu. ft. Heaped Capacity	550 LB		$1,589.00

Light Material Bucket

		735067016	84" Light Material Bucket (2134 mm), 27.5 cu. ft. Heaped Capacity	532 LB		$981.00

Low Profile Extended Bucket

		735063016	78" Low Profile Extended Bucket (1981 mm), 19.1 cu. ft. Heaped Capacity	531 LB		$1,086.00

NEW HOLLAND CONSTRUCTION

C232 T4 FINAL COMPACT TRACK LOADER
US PRICE LIST

		735064016	84" Low Profile Extended Bucket (2134 mm), 20.5 cu. ft. Heaped Capacity	607 LB		$1,173.00

Manure-Slurry Bucket

		735070016	84" Manure-Slurry Bucket (2134 mm), 22.6 cu. ft. Heaped Capacity	535 LB		$995.00

Pallet Fork

		735075006	Pallet Fork Frame w/48" Tines	540 LB		$1,265.00

SmartFit Teeth

		735184006	72" HDE Bucket w/ Teeth (1829 mm) 17.4 cu. ft. Heaped Capacity	624 LB		$1,692.00
		735185006	78" HDE Bucket w/ Teeth (1981 mm) 18.9 cu. ft. Heaped Capacity	697 LB		$1,898.00
		735186006	84" HDE Bucket w/ Teeth (2134 mm) 20.5 cu. ft. Heaped Capacity	728 LB		$2,032.00

		735024016	Hydraulic Coupler Kit Install Time = 8.0 hours Reference dependency matrix. For converting mechanical coupler to hydraulic coupler.	159 LB		$1,236.00

C234 TIER 4 FINAL COMPACT TRACK LOADER
US PRICE LIST

Standard Equipment

ENGINE:
- FPT F5B FL413E water cooled diesel engine
- 207 CID (3.4 L) Turbo
- Tier 4 Final Certified
- High Pressure Common Rail (HPCR) Fuel Injection
- Charged Air Cooler (CAC)
- Horsepower:
  - Gross 90
  - Net 84
  - Peak torque 282 lb*ft (383 Nm)
- 120 amp alternator
- Air cleaner – dual element
- Organic Acid Technology (OAT)
- Anti-freeze solution to -34° F
- Fuel tank - 25.5 gal. (U.S.)
- Selective Catalytic Reduction (SCR) Muffler
- Diesel Exhaust Fluid (DEF) Tank – 2.8 gal. (U.S.)
- 3-stack after cooler / radiator / Oil cooler configuration
- Maintenance Free Belt
- Glow Plugs
- Maintenance free 1000 CCA battery with master electrical disconnect

OPERATOR'S PROTECTIVE STRUCTURE:
- ROPS/FOPS Level 1 canopy with side screens
- Control lockout system
- Tilt forward ROPS/FOPS
- Electric parking brake control
- Hand throttle and Foot throttle
- Switchable (ISO - H) Electro Hydraulic Controls (only on EH models)
- Operator's compartment floor cleanout
- Rear window with emergency escape
- Padded Arm Rests (EH Controls ONLY)
- Suspension Seat, vinyl with 2" retractable lap seat belt
- Foot rest

OPERATOR'S PROTECTIVE STRUCTURE (Continued):
- Dome Light
- 12V Power plug socket
- Cup holder
- Tool Pocket
- Top window
- Headliner
- Alarm package (backup and horn)

HYDRAULICS:
- 6 micron oil filtration system
- 3 spool loader control valve
- Auxiliary hydraulics, Proportional thumb wheel activated: loader arm mounted with ISO specification flat face "connect-under-pressure" disconnects Including case drain
- Heavy duty hydraulic oil cooler
- Loader arm float position
- Auxiliary hydraulic function lockout override
- Loader arm circuit lockout override

LOADER:
- Mechanical attachment coupler
- Radial Lift Geometry
- Mechanical Boom Locks (on loader arm)
- SAE operating load:
  - For C234:
    - 3400 lbs. at 50%
    - 2380 lbs. at 35%
    - Tipping load: 6800 lbs.

INSTRUMENTATION:
- Advanced Instrument Cluster with hour meter, tachometer, fuel gauge, Diesel Exhaust Fluid gauge, engine coolant temperature gauge, diagnostic features and security lock-out

C234 TIER 4 FINAL COMPACT TRACK LOADER
US PRICE LIST

Standard Equipment

Warning lights with alarms:
- Critical system stop
- Engine system
- Hydraulic system
- Electrical and diagnostic system

Warning alarms:
- Battery voltage (plus display)
- Diesel Exhaust Fluid (DEF)

Oil Service

Indicator Light:
- Engine preheat, Parking brake,
- Seat belt reminder

TRACK SYSTEM:

Electro Hydraulic Controlled Hydrostatic 2-speed planetary final drive

Positive drive imbedded steel rubber track belt

Spring applied hydraulic release (SAHR) disc parking brake

Dynamic braking

UNDERCARRIAGE:

Rigid track frame mounting

Permanently sealed (duo cone face seal) & lubricated idlers and rollers

Triple flange lower rollers

Single flange front and rear idlers

Hydraulic track adjustment

Track recoil spring

Undercarriage Hose Covers

OTHER STANDARD FEATURES:

Lights - 4 front (2 forward, 2 @ 45 deg), 2 rear (halogen)

Pre-wired for rotating beacon

Service access hood, lockable

Steel Hoods & Covers

Single point daily service

Tail lights

Options harness (only on EH models)

Remote Oil and Fuel Filters

Debris Ingression Prevention Sealing

Heavy Duty Rear Door

Block Heater 120V - USA

C234 TIER 4 FINAL COMPACT TRACK LOADER
US PRICE LIST

Models

COMMERCIAL MODEL	VERSION	MODEL	Weight	Factory Data	List Price
C234 T4B-C	T4B-C	C234	10,000 LB		$85,680.00

C234 TIER 4 FINAL COMPACT TRACK LOADER
US PRICE LIST

Factory Supplied Options

Order Code	Description	Weight	Factory Data	List Price

PACKAGE

SD_T9999 NEW HOLLAND CTL/SSL PACKAGES

		761610	761610 EH2-Basic-ROPS **E-H CONTROLS** **E-H CONTROL 2SPD** **FRONT ELEC/MULTI-FUNC** **HEAVY DUTY REAR DOOR** **MANUAL COUPLER** **OPEN NO HEAT OR HVAC** **SUSPENSION SEAT** **STEEL LIGHTS W/ TS** **BLOCK HEATER 120V-USA** **LAP BAR**			($6,500.00)
		761618	761618 FC2-Basic-ROPS **FOOT CONTROLS** **MECH CONTROL 2SPD** **FRONT ELEC/MULTI-FUNC** **HEAVY DUTY REAR DOOR** **MANUAL COUPLER** **OPEN NO HEAT OR HVAC** **SUSPENSION SEAT** **STEEL LIGHTS W/ TS** **BLOCK HEATER 120V-USA** **LAP BAR**			($6,500.00)
		761621	761621 FC2-Plus-Cab **FOOT CONTROLS#** **MECH CONTROL 2SPD#** **FRONT ELEC/MULTI-FUNC#** **HEAVY DUTY REAR DOOR** **HEAVY DUTY HYDRAULIC COUPLER#** **HVAC-GLASS DOOR#** **SUSPENSION SEAT#** **STEEL LIGHTS W/ TS#** **BLOCK HEATER 120V-USA#** **LAP BAR#**			($6,500.00)

C234 TIER 4 FINAL COMPACT TRACK LOADER
US PRICE LIST

		761624	761624 FC2-Elite-Air Cab **FOOT CONTROLS#** **MECH CONTROL 2SPD#** **PERF w/FRONT ELEC MULTI FUNCTION, SELF LEVEL, RIDE CONTROL** **HEAVY DUTY REAR DOOR#** **HEAVY DUTY HYDRAULIC COUPLER#** **HVAC-GLASS DOOR#** **AIR SUSPENSION SEAT#** **STEEL LIGHTS W/ TS#** **BLOCK HEATER 120V-USA#** **LAP BAR#**			($6,500.00)
		761628	761628 EH2-Limited-Air Cab **E-H CONTROLS#** **E-H CONTROL 2SPD#** **HIGH FLOW PLUS SELF LEVEL, RIDE CONTROL** **HEAVY DUTY REAR DOOR#** **HEAVY DUTY HYDRAULIC COUPLER#** **HVAC-GLASS DOOR#** **AIR SUSPENSION SEAT#** **STEEL LIGHTS W/ TS#** **BLOCK HEATER 120V-USA#** **LAP BAR#**			($6,500.00)
		761635	761635 EH2-Limited HF Air Cab **E-H CONTROLS#** **E-H CONTROL 2SPD#** **ENHANCED HIGH FLOW#** **HEAVY DUTY REAR DOOR#** **REINFORCED HYDRAULIC COUPLER#** **HVAC-GLASS DOOR#** **AIR SUSPENSION SEAT#** **STEEL LIGHTS W/ TS#** **BLOCK HEATER 120V-USA#** **LAP BAR#**			($6,500.00)
		761637	EH2-ELITE HF-AIR CAB **E-H CONTROLS#** **E-H CONTROL 2SPD#** **HIGH FLOW W/ MULTI-FUNCTION FRONT ELECTRIC#** **HEAVY DUTY REAR DOOR#** **HEAVY DUTY HYDRAULIC COUPLER#** **HVAC-GLASS DOOR#** **AIR SUSPENSION SEAT#** **STEEL LIGHTS W/ TS#** **BLOCK HEATER 120V-USA#** **LAP BAR#**			($6,500.00)
			.			

NEW HOLLAND CONSTRUCTION

C234 TIER 4 FINAL COMPACT TRACK LOADER
US PRICE LIST

CONTROLS AND TRANSMISSION

SD_01100 CONTROLS LEVEL

		761029	2 Speed Mechanical Controls **Available in "H Pattern" Hand Controls or Hand and Foot Controls.**			($2,095.00)
		761031	2 Speed E-H Controls **Electro-Hydraulic Switchable (ISO-H Pattern) Controls with Two Speed**			No Charge

SD_01401 DRIVE CONTROL TYPE

		761040	Hand Controls **H Pattern, ONLY. Select Mechanical Controls (761029)**			No Charge
		761041	Hand and Foot Controls **ONLY Select with Mechanical Controls (761029)**			No Charge
		761042	E-H Controls **ONLY Select with E-H Controls (761031)**			No Charge

ROPS/CAB

SD_05009 CAB

		761043	Open Cab (No Heat or HVAC) **with top window and keyed start**			No Charge
		761045	Enclosed Cab with HVAC **Includes side windows, front glass door with wiper, shoulder belt, radio with speakers and keyless start**			$5,664.00
		761183	Enclosed Cab w/HVAC -Demo Door **Includes side windows, 1/2" polycarbonate (will not shatter like glass), front door with wiper, shoulder belt, radio wiith speakers, and keyless start**			$7,445.00

SD_05016 OPEN CAB TRIM

		X05016X	No Open Cab Interior Trim Pkg			No Charge
		761186	Open Cab Interior Trim Package **For use with Open Cab. Covers interior sides and rear.**			$310.00

SD_05185 CAB SEAT

		761052	Suspension Seat (Vinyl)			No Charge
		761062	Air Ride Suspension Seat **Fabric with temperature control may not be ordered with Open Cab option 761043**			$582.00

C234 TIER 4 FINAL COMPACT TRACK LOADER
US PRICE LIST

SD_K5104 LAP BAR-NH

		761224	LAP BAR NEW HOLLAND **Lap Bar Installed from Factory.** **Seat belt included. Sensor moved from seat belt to the lap bar for machine operation (lap bar must be down to operate).**			No Charge
		XK5104X	NO LAP BAR NEW HOLLA **Comes with seat belt only. Seat belt must be engaged for machine operation.**			($265.00)

COUPLER

SD_K5101 COUPLERS

		726003	Manual Coupler			No Charge
		761206	Heavy Duty Hydraulic Coupler			$1,027.00

BLOCK HEATER

SD_02086 BLOCK HEATER

		761048	Block Heater (120V)			No Charge

TURN SIGNALS

SD_06056 EXTERIOR LIGHTS

		463739	STEEL LIGHTS WITH TURN SIGNALS			No Charge

OPERATORS MANUAL

SD_32035 LANGUAGE OPTIONS

		761085	English			No Charge
		761088	French			No Charge
		761097	Spanish			No Charge

OPTIONAL PACKAGES

SD_01201 OPTION PACKAGES

		761034	Front Electric/Multi-Function **Contains Front Electric (Multi-function) for Standard Auxiliaries**			No Charge

NEW HOLLAND CONSTRUCTION

C234 TIER 4 FINAL COMPACT TRACK LOADER
US PRICE LIST

		761035	Performance w/Front Electric **Contains ON/OFF one-way self leveling, ride control, and multi-function electric control**			$1,172.00
		761036	High Flow Package **Contains High Flow hydraulics with multi-function electric control**			$1,874.00
		761037	High Flow Plus Package **Contains multi-function, high flow hydraulics, on/off one-way self-leveling and glide ride**			$3,047.00
		761039	Enhanced High Flow Package **Only available with units equipped with EH Controls** **Contains 4000 PSI High Flow Hydraulics, Second Auxiliaries, Multi-Function Electric Control, High Flow Hydraulics, ON/OFF One-way Self Leveling and Glide Ride**			$6,317.00

TRACK BELT OPTIONS

SD_10015 TRACK OPTIONS

		8500147	450 mm (17.7 inch) **Standard Duty rail type track with zig zag tread pattern.** **78" OTW** **100 Pitch**			No Charge
		8500187	450 BELT HD **Heavy Duty rail type track with HH tread pattern.** **78" OTW** **100 pitch**			$398.00

FRONT ATTACHMENTS

BUCKETS

SD_K5231 BUCKETS

		761126	78" Dirt & Foundry Bucket **(1981 mm), 18.4 cu. ft. heaped capacity**			$1,038.00
		761133	78" Low Profile Extended **(1981 mm), 18.6 cu. ft. Heaped Capacity**			$1,086.00
		761134	84" Low Profile Extended **(2134 mm), 20.2 cu. ft. Heaped Capacity**			$1,173.00
		761137	84" Light Material Bucket **(2134 mm), 27.9 cu. ft. Heaped Capacity**			$1,047.00
		761140	84" Manure-Slurry Bucket **(2134 mm), 22.5 cu. ft. Heaped Capacity**			$995.00
		761143	78" Heavy Duty Dirt Bucket **(1981 mm), 15.9 cu. ft. Heaped Capacity**			$1,538.00
		761144	84" Heavy Duty Dirt Bucket **(2134 mm), 19.4 cu. ft. Heaped Capacity**			$1,589.00
		XK5231X	No Bucket			No Charge

C234 TIER 4 FINAL COMPACT TRACK LOADER
US PRICE LIST

SmartFit Teeth

		761255	78" HD Ext. w/ SmartFit Teeth **(1981 mm) 18.9 cu ft. Heaped Capacity**			$1,898.00
		761256	84" HD Ext. w/ SmartFit Teeth **(2134 mm) 20.5 cu. ft. Heaped Capacity**			$2,032.00

BOLT ON CUTTING EDGE

SD_K6399 BOLT ON CUTTING EDGE

		761148	78" Bolt on Cutting Edge			$259.00
		761149	84" Bolt on Cutting Edge			$279.00
		XK6399X	No Bolt on Cutting Edge			No Charge

ADDITIONAL EQUIPMENT

SD_34008 BATTERY DISCONNECT

		761074	Battery Disconnect			No Charge

ADDITIONAL EQUIPMENT

SD_39021 REAR DOOR

		761211	Heavy Duty Rear Door - NH			$440.00

MOVE TO BIC

C234 TIER 4 FINAL COMPACT TRACK LOADER
US PRICE LIST

SPECIAL PAINT

SD_50103 SPECIAL PAINT

		726029	Special Paint **The price listed is for a color change only from the standard factory color: CNH #86572648 (NH-Yellow). All Special Color formulations will be applied using approved factory processes and materials. Metallic or other special formulations and/or materials are not available. A color chip must be provided to CNH for non CNH colors. A minimum lead time of 8 business weeks will be required prior to production. Unless specified, regular production decals will be applied. Requests can be made that decals not be applied. However, SAFETY decals MUST BE APPLIED in all cases. The following components remain CNH grey: lift & bucket cylinders, front coupler and attachments, ROPS, side screens, upper chassis and control links, undercarriages and brackets, and rear door.**			$2,999.00
		X50103X	No Special Paint			No Charge

TELEMATICS

SD_K6450 TELEMATICS

		761198	NH FleetForce On-board **Unit comes factory fit with wiring and modem.** **To order the Service Subscription contact Service Parts.**			$816.00
		XK6450X	No Telematics			No Charge

C234 TIER 4 FINAL COMPACT TRACK LOADER
US PRICE LIST

Factory Supplied Attachments

Order Code			Description	Weight	Factory Data	List Price
BASIC ATTACHMENTS						
		735006006	Beacon Kit Install Time = 0.2 hours	1 LB		$154.00
		735007006	4-Corner LED Strobe Kit Install Time = 0.5 hours Must order connector. Reference dependency matrix.	24 LB		$500.00
		735011006	Glass Front Door Kit Install Time = 2.0 hours Center mounted wiper Requires three point seat belt. Must order applicable harness. Reference dependency matrix.	182 LB		$1,543.00
		735012006	Demo Front Door Kit Install Time = 2.0 hours 1/2" polycarbonate door (will not shatter like glass) Center mounted wiper Requires three point seat belt. Must order applicable harness. Reference dependency matrix.	182 LB		$2,711.00
		735013006	Cab Side Windows Kit Install Time = 1.0 hours	139 LB		$865.00
		735016006	Radio Kit Install Time = 2.0 hours Must order applicable harness. Reference dependency matrix.	16 LB		$413.00
		735020176	KIT ROAD LIGHTS Install Time = 2.5 hours Added front lights with turn signals that mount on the loader booms. Added rear lights with signals. (Reference image in SSL/CTL Brochure)	32 LB		$606.00
		735021036	Multi-Function Front Electrical Mech Kit Install Time = 2.0 hours For use in C234 mechanical and EH control machines. Reference Dependency Matrix for additional component requirements.	62 LB		$274.00
		735022026	One Way Self Level Kit Install Time = 4.0 hours	14 LB		$485.00
		735023006	Ride Control Kit Install Time = 4.0 hours Must order applicable handle. Reference dependency matrix.	33 LB		$481.00
		735024006	Hydraulic Coupler Kit Must order applicable harness. Reference dependency matrix.	50 LB		$1,236.00
		735025116	High Flow Auxiliary Kit	210 LB		$2,519.00
		735027066	Second Hydraulic Front Auxiliary Kit Install Time = 8.0 hours	99 LB		$1,029.00
		735036036	4-Point Lift Hook Kit Install Time = 2.0 hours	20 LB		$222.00
		735037006	Single Point Lift Hook Kit Install Time = 4.0 hours	289 LB		$1,029.00
		735038006	FOPS Level 2 Modification Kit Install Time = 1.0 hours	61 LB		$343.00

NEW HOLLAND CONSTRUCTION

C234 TIER 4 FINAL COMPACT TRACK LOADER
US PRICE LIST

		735039076	Extra Counterweight Kit Install Time = 0.5 hours	659 LB		$1,168.00
		735042006	Interior Mirror Kit Install Time = 0.5 hours	4 LB		$58.00
		735045046	Foot Control Conversion Kit Install Time = 8.0 hours Converting to Hand&Foot control from Hand (H-Pattern) Mechanical control units only.	52 LB		$615.00
		735046046	Hand Control Conversion Kit Install Time = 6.0 hours Convert to Hand (H-Pattern) from Hand&Foot Mechanical control only. For units built after S/N NFM418327.	76 LB		$824.00
		735047006	120V Block Heater Kit Install Time = 0.5 hours	6 LB		$206.00
		735048006	220V Block Heater Kit Install Time = 0.5 hours	6 LB		$206.00
		735056016	78" Dirt & Foundry Bucket (1981 mm), 17.7 cu. ft. Heaped Capacity	429 LB		$1,038.00
		735142006	Cylinder Guard Kit Install Time = 0.5 hours Provides protection to the loader bucket dump/curl cylinders in severe operating conditions.	21 LB		$739.00
		735146016	Three Point Seat Belt	4 LB		$233.00
		735150006	Open Cab Interior Trim Kit Install Time = 1.0 hours	25 LB		$372.00
		735153006	High Beam Light Kit 2 additional work lights	11 LB		$199.00
		735158196	HVAC Complete Install Time = 27.7 hours Must order applicable harness. Reference dependency matrix.	394 LB		$2,951.00
		735160006	Fender Extensions - Medium Frame Install Time = 1.5 hours	37 LB		$334.00
		735161006	Heavy Duty Front Lights - Radial Model Must order supporting bracket (84338448) and two (2) harnesses (84306340) from service parts to complete kit.	26 LB		$372.00
		735168006	Aspirator (Precleaner) Kit Install Time = 2.0 hours	39 LB		$683.00
		735179006	Lap Bar Kit Install Time = 2.0 hours	40 LB		$600.00

Heavy Duty Dirt Bucket

		735073016	78" Heavy Duty Dirt Bucket (1981 mm), 15.5 cu. ft. Heaped Capacity	526 LB		$1,538.00
		735074016	84" Heavy Duty Dirt Bucket (2134 mm), 17.0 cu. ft. Heaped Capacity	550 LB		$1,589.00

Light Material Bucket

		735067016	84" Light Material Bucket (2134 mm), 27.5 cu. ft. Heaped Capacity	532 LB		$981.00

C234 TIER 4 FINAL COMPACT TRACK LOADER
US PRICE LIST

Low Profile Extended Bucket

		735063016	78" Low Profile Extended Bucket (1981 mm), 19.1 cu. ft. Heaped Capacity	531 LB		$1,086.00
		735064016	84" Low Profile Extended Bucket (2134 mm), 20.5 cu. ft. Heaped Capacity	607 LB		$1,173.00

Manure-Slurry Bucket

		735070016	84" Manure-Slurry Bucket (2134 mm), 22.6 cu. ft. Heaped Capacity	535 LB		$995.00

Pallet Fork

		735075006	Pallet Fork Frame w/48" Tines	540 LB		$1,265.00

SmartFit Teeth

		735184006	72" HDE Bucket w/ Teeth (1829 mm) 16.2 cu. ft. Heaped Capacity	624 LB		$1,692.00
		735185006	78" HDE Bucket w/ Teeth (1981 mm) 18.9 cu. ft. Heaped Capacity	697 LB		$1,898.00
		735186006	84" HDE Bucket w/ Teeth (2134 mm) 20.5 cu. ft. Heaped Capacity	728 LB		$2,032.00

C237 T4 FINAL COMPACT TRACK LOADER
US PRICE LIST

Standard Equipment

ENGINE:
- FPT F5H FL463H water cooled diesel engine
- 207 CID (3.4 L) Turbo
- Tier 4 Final Certified
- High Pressure Common Rail (HPCR) Fuel Injection
- Charged Air Cooler (CAC)
- Horsepower:
  - Gross 74
  - Net 68
  - Peak torque 232 lb*ft (314 Nm)
- 120 amp alternator
- Air cleaner – dual element
- Organic Acid Technology (OAT)
- Anti-freeze solution to -34° F
- Fuel tank - 25.5 gal. (U.S.)
- Diesel Oxidation Catalyst
- 3-stack after cooler / radiator / Oil cooler configuration
- Maintenance-Free Belt
- Glow Plugs
- Maintenance free 1000 CCA battery

OPERATOR'S PROTECTIVE STRUCTURE:
- ROPS/FOPS Level 1 canopy with side screens
- Control lockout system
- Tilt forward ROPS/FOPS
- Electric parking brake control
- Hand throttle and Foot throttle
- Switchable (ISO - H) Electro Hydraulic Controls (only on EH models)
- Operator's compartment floor cleanout
- Rear window with emergency escape
- Padded Arm Rests (EH Controls ONLY)
- Suspension Seat, vinyl with 2" retractable lap seat belt
- Foot rest
- Dome Light
- 12V Power plug socket
- Cup holder

OPERATOR'S PROTECTIVE STRUCTURE (Continued):
- Tool Pocket
- Top window
- Headliner
- Alarm package (backup and horn)

HYDRAULICS:
- 6 micron oil filtration system
- 3 spool loader control valve
- Auxiliary hydraulics, Proportional thumb wheel activated: loader arm mounted with ISO specification flat face "connect-under-pressure" disconnects Including case drain
- Heavy duty hydraulic oil cooler
- Loader arm float position
- Auxiliary hydraulic function lockout override
- Loader arm circuit lockout override

LOADER:
- Mechanical attachment coupler
- Vertical Lift SUPERBOOM Geometry
- In-Cab Boom Locks
- SAE operating load:
  - For C237:
    - 3700 lbs. at 50%
    - 2590 lbs. at 35%
    - Tipping load: 7400 lbs.

C237 T4 FINAL COMPACT TRACK LOADER
US PRICE LIST

Standard Equipment

INSTRUMENTATION:
- Advanced Instrument Cluster with hour meter, tachometer, fuel gauge, hydraulic oil temperature gauge, engine coolant temperature gauge, diagnostic features and security lock-out
- Warning lights with alarms:
  - Critical system stop
  - Engine system
  - Hydraulic system
  - Electrical and diagnostic system
- Warning alarms:
  - Battery voltage (plus display)
  - DPF
  - Oil Service
- Indicator Light:
  - Engine preheat, Parking brake, Seat belt reminder

TRACK SYSTEM:
- Electro Hydraulic Controlled Hydrostatic 2-speed planetary final drive
- Positive drive imbedded steel rubber track belt
- Spring applied hydraulic release (SAHR) disc parking brake
  - Dynamic braking

UNDERCARRIAGE:
- Rigid track frame mounting
- Permanently sealed (duo cone face seal) & lubricated idlers and rollers
- Triple flange lower rollers
- Single flange front and rear idlers
- Hydraulic track adjustment
- Track recoil spring
- Undercarriage Hose Covers

OTHER STANDARD FEATURES:
- Lights - 2 front, 2 rear (halogen)
- Pre-wired for rotating beacon
- Service access hood, lockable
- Steel Hoods & Covers
- Single point daily service
- Tail lights
- Options harness (only on EH models)
- Remote Oil and Fuel Filters
- Debris Ingression Prevention Sealing

C237 T4 FINAL COMPACT TRACK LOADER
US PRICE LIST

Models

COMMERCIAL MODEL	VERSION	MODEL	Weight	Factory Data	List Price
C237 T4 FINAL	Tier 4 B Regulated	C237	9,630 LB		$78,888.00

C237 T4 FINAL COMPACT TRACK LOADER
US PRICE LIST

Factory Supplied Options

Order Code	Description	Weight	Factory Data	List Price

PACKAGE

SD_T9999 NEW HOLLAND CTL/SSL PACKAGES

		761609	761609 EH2-Basic-ROPS **E-H CONTROLS#** **E-H CONTROL 2SPD#** **FRONT ELEC/MULTI-FUNC#** **REAR DOOR#** **MANUAL COUPLER#** **OPEN NO HEAT OR HVAC#** **SUSPENSION SEAT#** **STEEL LIGHTS W/ TS#** **BLOCK HEATER 120V-USA#** **LAP BAR#**			($6,500.00)
		761615	761615 EH2-Deluxe-Air Cab **E-H CONTROLS#** **E-H CONTROL 2SPD#** **FRONT ELEC/MULTI-FUNC#** **REAR DOOR#** **HEAVY DUTY HYDRAULIC COUPLER#** **HVAC-GLASS DOOR#** **AIR SUSPENSION SEAT#** **STEEL LIGHTS W/ TS#** **BLOCK HEATER 120V-USA#** **LAP BAR#**			($6,500.00)
		761617	761617 FC2-Basic-ROPS **FOOT CONTROLS#** **MECH CONTROL 2SPD#** **FRONT ELEC/MULTI-FUNC#** **REAR DOOR#** **MANUAL COUPLER#** **OPEN NO HEAT OR HVAC#** **SUSPENSION SEAT#** **STEEL LIGHTS W/ TS#** **BLOCK HEATER 120V-USA#** **LAP BAR#**			($6,500.00)

NEW HOLLAND CONSTRUCTION

C237 T4 FINAL COMPACT TRACK LOADER
US PRICE LIST

		761620	761620 FC2-Plus-Cab **FOOT CONTROLS#** **MECH CONTROL 2SPD#** **FRONT ELEC/MULTI-FUNC#** **REAR DOOR#** **HEAVY DUTY HYDRAULIC COUPLER#** **HVAC-GLASS DOOR#** **SUSPENSION SEAT#** **STEEL LIGHTS W/ TS#** **BLOCK HEATER 120V-USA#** **LAP BAR#**			($6,500.00)
		761623	761623 FC2-Deluxe-Air Cab **FOOT CONTROLS#** **MECH CONTROL 2SPD#** **FRONT ELEC/MULTI-FUNC#** **REAR DOOR#** **HEAVY DUTY HYDRAULIC COUPLER#** **HVAC-GLASS DOOR#** **AIR SUSPENSION SEAT#** **STEEL LIGHTS W/ TS#** **BLOCK HEATER 120V-USA#** **LAP BAR#**			($6,500.00)
		761628	761628 EH2-Limited-Air Cab **E-H CONTROLS** **E-H CONTROL 2SPD** **HIGH FLOW PLUS w/ HIGH FLOW HYDRAULICS, SELF LEVELING, RIDE CONTROL** **HEAVY DUTY REAR DOOR** **HEAVY DUTY HYDRAULIC COUPLER** **HVAC-GLASS DOOR** **AIR SUSPENSION SEAT** **STEEL LIGHTS W/ TS** **BLOCK HEATER 120V-USA** **LAP BAR**			($6,500.00)
		761633	761633 EH2-Elite-Air Cab **E-H CONTROLS#** **E-H CONTROL 2SPD#** **PERF w/FRONT ELEC/MULTI-FUNC, SELF LEVEL, RIDE CONTROL** **REAR DOOR#** **HEAVY DUTY HYDRAULIC COUPLER#** **HVAC-GLASS DOOR#** **AIR SUSPENSION SEAT#** **STEEL LIGHTS W/ TS#** **BLOCK HEATER 120V-USA#** **LAP BAR#**			($6,500.00)

NEW HOLLAND CONSTRUCTION

C237 T4 FINAL COMPACT TRACK LOADER
US PRICE LIST

		761636	761636 EH2-Limited HF Air Cab **E-H CONTROLS** **E-H CONTROL 2SPD** **HIGH FLOW with FRONT ELEC./MULTI-FUNC.** **HEAVY DUTY REAR DOOR** **REINFORCED HYDRAULIC COUPLER** **HVAC-GLASS DOOR** **AIR SUSPENSION SEAT** **STEEL LIGHTS W/ TS** **BLOCK HEATER 120V-USA** **LAP BAR#**			($6,500.00)

CONTROLS AND TRANSMISSION

SD_01100 CONTROLS LEVEL

		761029	2 Speed Mechanical Controls **Available in "H Pattern" Hand Controls or Hand and Foot Controls**			($2,095.00)
		761031	2 Speed E-H Controls **Electro-Hydraulic Switchable (ISO-H Pattern) Controls with Two Speed**			No Charge

SD_01401 DRIVE CONTROL TYPE

		761040	Hand Controls **H Pattern, ONLY Select with Mechanical Controls (761029).**			No Charge
		761041	Hand and Foot Controls **ONLY Select with Mechanical Controls (761029).**			No Charge
		761042	E-H Controls **ONLY Select with E-H Control Package (761031).**			No Charge

ROPS/CAB

SD_05009 CAB

		761043	Open Cab (No Heat or HVAC) **with top window and keyed start**			No Charge
		761045	Enclosed Cab with HVAC **Includes side windows, front glass door with wiper, shoulder belt, radio with speakers and keyless start**			$5,664.00
		761183	Enclosed Cab w/HVAC -Demo Door **Includes side windows, 1/2" polycarbonate (will not shatter like glass), front door with wiper, shoulder belt, radio with speakers, and keyless start**			$7,445.00

NEW HOLLAND CONSTRUCTION

C237 T4 FINAL COMPACT TRACK LOADER
US PRICE LIST

SD_05016 OPEN CAB TRIM

		X05016X	No Open Cab Interior Trim Pkg			No Charge
		761186	Open Cab Interior Trim Package **For use with Open Cab. Covers interior sides and rear.**			$310.00

SD_05185 CAB SEAT

		761052	Suspension Seat (Vinyl)			No Charge
		761062	Air Ride Suspension Seat **(Fabric) with temperature control** **(may not be ordered with Open Cab option 761043**			$582.00

SD_K5104 LAP BAR-NH

		XK5104X	NO LAP BAR NEW HOLLA **Comes with seat belt only. Seat belt must be engaged for machine operation.**			($265.00)
		761224	LAP BAR NEW HOLLAND **Lap Bar Installed from Factory.** **Seat belt included. Sensor moved from seat belt to the lap bar for machine operation (lap bar must be down to operate).**			No Charge

COUPLER

SD_K5101 COUPLERS

		726003	Manual Coupler			($1,094.00)
		761206	Heavy Duty Hydraulic Coupler			No Charge

BLOCK HEATER

SD_02086 BLOCK HEATER

		761048	Block Heater (120V)			No Charge

TURN SIGNALS

SD_06056 EXTERIOR LIGHTS

		463739	STEEL LIGHTS WITH TURN SIGNALS			No Charge

OPERATORS MANUAL

SD_32035 LANGUAGE OPTIONS

		761085	English			No Charge
		761088	French			No Charge

NEW HOLLAND CONSTRUCTION

C237 T4 FINAL COMPACT TRACK LOADER
US PRICE LIST

		761097	Spanish			No Charge

OPTIONAL PACKAGES

SD_01201 OPTION PACKAGES

		761034	Front Electric/Multi-Function **Contain Front Electric (Multi-function) for Standard Auxiliaries**			No Charge
		761035	Performance w/Front Electric **Contains ON/OFF One-Way Self Leveling, Ride Control, and Multi-Function Electric Control**			$1,172.00
		761036	High Flow Package **Contains High Flow Hydraulics with Multi-Function Electric Control**			$1,874.00
		761037	High Flow Plus Package **Contains Multi-Function, High Flow Hydraulics, ON/OFF One-way Self Leveling and Glide Ride**			$3,047.00

TRACK BELT OPTIONS

SD_10015 TRACK OPTIONS

		8500147	450 mm (17.7 inch) **Standard Duty rail type track with zig zag tread pattern** **78" OTW** **100 Pitch**			No Charge
		8500187	450 BELT HD **Heavy Duty rail type track with HH tread pattern** **78" OTW** **100 Pitch**			$398.00

FRONT ATTACHMENTS

BUCKETS

SD_K5231 BUCKETS

		XK5231X	No Bucket			No Charge
		Dirt & Foundry Bucket				
		761126	78" Dirt & Foundry Bucket **(1981 mm), 18.4 cu. ft. Heaped Capacity**			$1,038.00
		Low Profile Extended				
		761133	78" Low Profile Extended **(1981 mm), 18.6 cu. ft. Heaped Capacity**			$1,086.00
		761134	84" Low Profile Extended **(2134 mm), 20.2 cu. ft. Heaped Capacity**			$1,173.00
		Light Material Bucket				
		761137	84" Light Material Bucket **(2134 mm), 27.9 cu. ft. Heaped Capacity**			$1,047.00

C237 T4 FINAL COMPACT TRACK LOADER
US PRICE LIST

		Manure-Slurry Bucket				
		761140	84" Manure-Slurry Bucket **(2134 mm), 22.5 cu. ft. Heaped Capacity**			$995.00
		Heavy Duty Dirt Bucket				
		761143	78" Heavy Duty Dirt Bucket **(1981 mm), 15.9 cu. ft. Heaped Capacity**			$1,538.00
		761144	84" Heavy Duty Dirt Bucket **(2134 mm), 19.4 cu. ft. Heaped Capacity**			$1,589.00
		SmartFit Teeth				
		761255	78" HD Ext. w/ SmartFit Teeth **(1981 mm) 18.9 cu. ft. Heaped Capacity**			$1,898.00
		761256	84" HD Ext. w/ SmartFit Teeth **(2134 mm) 20.5 cu. ft. Heaped Capacity**			$2,032.00

BOLT ON CUTTING EDGE

SD_K6399 BOLT ON CUTTING EDGE

		XK6399X	No Bolt on Cutting Edge			No Charge
		761148	78" Bolt on Cutting Edge			$259.00
		761149	84" Bolt on Cutting Edge			$279.00

ADDITIONAL EQUIPMENT

SD_39021 REAR DOOR

		761075	Rear Door			No Charge
		761205	Heavy Duty Rear Door			$440.00

MOVE TO BIC

SPECIAL PAINT

SD_50103 SPECIAL PAINT

		X50103X	No Special Paint			No Charge

C237 T4 FINAL COMPACT TRACK LOADER
US PRICE LIST

		726029	Special Paint **The price listed is for a color change only from the standard factory color: CNH #86572648 (NH-Yellow). All Special Color formulations will be applied using approved factory processes and materials. Metallic or other special formulations and/or materials are not available. A color chip must be provided to CNH for non CNH colors. A minimum lead time of 8 business weeks will be required prior to production. Unless specified, regular production decals will be applied. Requests can be made that decals not be applied. However, SAFETY decals MUST BE APPLIED in all cases. The following components remain CNH grey: lift & bucket cylinders, front coupler and attachments, ROPS, side screens, upper chassis and control links, undercarriages and brackets, and rear door.**			$2,999.00

TELEMATICS

SD_K6450 TELEMATICS

		XK6450X	No Telematics			No Charge
		761198	NH FleetForce On-board **Unit comes factory fit with wiring and modem.** **To order the Service Subscription contact Service Parts.**			$816.00

C237 T4 FINAL COMPACT TRACK LOADER
US PRICE LIST

Factory Supplied Attachments

Order Code			Description	Weight	Factory Data	List Price
Basic Attachments						
		735006006	Beacon Kit Install Time = 0.2 hours	1 LB		$154.00
		735007006	4-Corner LED Strobe Kit Install Time = 0.5 hours Reference dependency matrix.	24 LB		$500.00
		735011006	Glass Front Door Kit Install Time = 2.0 hours Center mounted wiper Required three point seat belt Must order applicable harness. Reference dependency matrix.	182 LB		$1,543.00
		735012006	Demo Front Door Kit Install Time = 2.0 hours 1/2" polycarbonate door (will not shatter like glass) Center Mounted wiper Requires three point seat belt. Must order applicable harness. Reference dependency matrix.	182 LB		$2,711.00
		735013006	Cab Side Windows Kit Install Time = 1.0 hours	139 LB		$865.00
		735016006	Radio Kit Install Time = 4.0 hours Reference dependency matrix.	16 LB		$413.00
		735019106	KIT, TURN SIGNAL Plastic lights	7 LB		$247.00
		735020166	KIT ROAD LIGHTS	32 LB		$606.00
		735021016	Multi-Function Front Electrical Mech Kit Install Time = 2.0 hours C232: NR, Tier 4A and Tier 4B - Mechanical control machines only. C237: Tier 4B - Mechanical and EH control machines. Reference Dependency Matrix for additional component requirements.	11 LB		$274.00
		735022106	Kit Self-Level	30 LB		$451.00
		735023006	Ride Control Kit Install Time = 4.0 hours	33 LB		$481.00
		735024046	Hydraulic Coupler Kit Install Time = 8.0 hours For use with C232 units built AFTER S/N 470977 and C238 units built AFTER S/N 450583 Reference dependency matrix. For converting mechanical coupler to hydraulic coupler.	152 LB		$1,236.00
		735025066	High Flow Auxiliary Kit Install Time = 5.0 hours For use with TIER 4 models ONLY. Reference dependency matrix.	191 LB		$2,519.00
		735027056	Second Hydraulic Front Auxiliary Kit Install Time = 8.0 hours	99 LB		$1,029.00
		735029026	Battery Disconnect Kit Install Time = 2.0 hours	2 LB		$151.00

NEW HOLLAND CONSTRUCTION

C237 T4 FINAL COMPACT TRACK LOADER
US PRICE LIST

		735030006	Heavy Duty Rear Door Kit Install Time = 0.5 hours Rear door insert	32 LB		$308.00
		735036026	4-Point Lift Hook Kit Install Time = 1.0 hours For use on C232 NR, Tier 4A and Tier 4B machines and C238 NR and Tier4A machines. C238 Tier 4B machines must order kit 735036036	11 LB		$238.00
		735037046	Single Point Lift Hook Kit Install Time = 4.0 hours	269 LB		$1,029.00
		735038006	FOPS Level 2 Modification Kit Install Time = 1.0 hours	61 LB		$343.00
		735039076	Extra Counterweight Kit Install Time = 0.5 hours	659 LB		$1,168.00
		735040136	Aspirator Kit Install Time = 2.0 hours Tier 4 ONLY.	14 LB		$317.00
		735042006	Interior Mirror Kit Install Time = 0.5 hours	4 LB		$58.00
		735045046	Foot Control Conversion Kit Install Time = 8.0 hours For use with TIER 4 ONLY. Converting to Hand&Foot from Hand (H-Pattern).	52 LB		$615.00
		735045086	Foot Control Conversion Kit Install Time = 8.0 hours For use with Tier 4 models ONLY. Effective on units built prior to S/N NFM419274. Converting to Hand&Foot from Hand (H-Pattern). Not available for units equipped with Electro Hydraulic (EH) controls.	55 LB		$700.00
		735046016	Hand Control Conversion Kit Install Time = 6.0 hours For use with TIER 3 ONLY. Converting to Hand (H-Pattern) from Hand&Foot.	76 LB		$824.00
		735046046	Hand Control Conversion Kit Install Time = 6.0 hours Converting to Hand (H-Pattern) from Hand&Foot.	76 LB		$824.00
		735046066	Hand Control Conversion Kit Install Time = 6.0 hours For use with Tier 4A units AFTER S/N NDM471007 (C232) and NDM470304 (C238). Converting to Hand (H-Pattern) from Hand&Foot.	76 LB		$824.00
		735047006	120V Block Heater Kit Install Time = 0.5 hours	6 LB		$206.00
		735048006	220V Block Heater Kit Install Time = 0.5 hours	6 LB		$206.00
		735142006	Cylinder Guard Kit Install Time = 0.5 hours Provides protection to the loader bucket dump/curl cylinders in severe operating conditions.	21 LB		$739.00
		735146016	Three Point Seat Belt Install Time = 1.0 hours	4 LB		$233.00

NEW HOLLAND CONSTRUCTION

C237 T4 FINAL COMPACT TRACK LOADER
US PRICE LIST

		735150006	Open Cab Interior Trim Kit Install Time = 1.0 hours	25 LB		$372.00
		735153006	High Beam Light Kit Install Time = 1.0 hours Two added front lights; mounted inward of the standard front lights. Adding this kit would yield: four front lights along with turn signals (if already equipped with signals). Reference image in SSL/CTL Brochure.	11 LB		$199.00
		735158136	HVAC Complete Install Time = 28.0 hours	382 LB		$2,951.00
		735159046	Heater Complete Kit Install Time = 11.0 hours For use with TIER 4 ONLY Must order applicable harness. Reference dependency matrix.	141 LB		$1,374.00
		735160016	Fender Extensions - Large Frame Install Time = 1.5 hours	45 LB		$334.00
		735161016	Heavy Duty Front Lights - Vertical Model For use with vertical models. Must order supporting bracket (84338448) and two (2) harnesses (84306340) from service parts to complete kit. Does not include interated turn signals.	26 LB		$372.00
		735178036	Radiator Debris Kit Install Time = 1.0 hours To prevent large foreign material from damaging the radiator.	10 LB		$333.00
		735179006	Lap Bar Kit Install Time = 2.0 hours	40 LB		$600.00

Dirt & Foundry Bucket

		735056016	78" Dirt & Foundry Bucket (1981 mm), 17.7 cu. ft. Heaped Capacity	429 LB		$1,038.00

Heavy Duty Dirt Bucket

		735073016	78" Heavy Duty Dirt Bucket (1981 mm), 15.5 cu. ft. Heaped Capacity	526 LB		$1,538.00
		735074016	84" Heavy Duty Dirt Bucket (2134 mm), 17.0 cu. ft. Heaped Capacity	550 LB		$1,589.00

Light Material Bucket

		735067016	84" Light Material Bucket (2134 mm), 27.5 cu. ft. Heaped Capacity	532 LB		$981.00

Low Profile Extended Bucket

		735063016	78" Low Profile Extended Bucket (1981 mm), 19.1 cu. ft. Heaped Capacity	531 LB		$1,086.00
		735064016	84" Low Profile Extended Bucket (2134 mm), 20.5 cu. ft. Heaped Capacity	607 LB		$1,173.00

Manure-Slurry Bucket

		735070016	84" Manure-Slurry Bucket (2134 mm), 22.6 cu. ft. Heaped Capacity	535 LB		$995.00

C237 T4 FINAL COMPACT TRACK LOADER
US PRICE LIST

Pallet Fork

		735075006	Pallet Fork Frame w/48" Tines	540 LB		$1,265.00

SmartFit Teeth

		735185006	78" HDE Bucket w/ Teeth (1981 mm) 18.9 cu. ft. Heaped Capacity	697 LB		$1,898.00
		735186006	84" HDE Bucket w/ Teeth (2134 mm) 20.5 cu. ft. Heaped Capacity	728 LB		$2,032.00

		735024016	Hydraulic Coupler Kit Install Time = 8.0 hours Reference dependency matrix. For converting mechanical coupler to hydraulic coupler.	159 LB		$1,236.00

C245 TIER 4 FINAL COMPACT TRACK LOADER
US PRICE LIST

Standard Equipment

ENGINE:
- FPT F5B FL413E water cooled diesel engine
- 207 CID (3.4 L) Turbo
- Tier 4 Final Certified
- High Pressure Common Rail (HPCR) Fuel Injection
- Charged Air Cooler (CAC)
- Horsepower:
  - Gross 90
  - Net 84
  - Peak torque 282 lb*ft (383 Nm)
- 160am alternator
- Air cleaner – dual element
- Organic Acid Technology (OAT)
- Anti-freeze solution to -34° F
- Fuel tank - 25.5 gal. (U.S.)
- Diesel Oxidation Catalyst (DOC) with Selective Catalytic Reduction (SCR) Muffler
- Diesel Exhaust Fluid (DEF) Tank – 2.8 gal. (U.S.)
- 3-stack after cooler / radiator / Oil cooler configuration
- Maintenance Free Belt
- Glow Plugs
- Maintenance free 1000 CCA battery with master electrical disconnect

OPERATOR'S PROTECTIVE STRUCTURE:
- ROPS/FOPS Level 1 canopy with side screens
- Control lockout system
- Tilt forward ROPS/FOPS
- Electric parking brake control
- Hand throttle and Foot throttle
- Switchable (ISO - H) Electro Hydraulic Controls (only on EH models)
- Operator's compartment floor cleanout
- Rear window with emergency escape
- Padded Arm Rests (EH Controls ONLY)
- Suspension Seat, vinyl with 2" retractable lap seat belt
- Foot rest

OPERATOR'S PROTECTIVE STRUCTURE (Continued):
- Dome Light
- 12V Power plug socket
- Cup holder
- Tool Pocket
- Top window
- Headliner
- Alarm package (backup and horn)

HYDRAULICS:
- 6 micron oil filtration system
- 3 spool loader control valve
- Auxiliary hydraulics, Proportional thumb wheel activated: loader arm mounted with ISO specification flat face "connect-under-pressure" disconnects Including case drain
- Heavy duty hydraulic oil cooler
- Loader arm float position
- Auxiliary hydraulic function lockout override
- Loader arm circuit lockout override

LOADER:
- Mechanical attachment coupler
- Vertical Lift SUPERBOOM Geometry
- In-Cab Boom Locks
- SAE operating load:
  - For C245
    - 4500 lbs. at 50%
    - 3150 lbs. at 35%
    - Tipping load: 9000 lbs.

C245 TIER 4 FINAL COMPACT TRACK LOADER
US PRICE LIST

Standard Equipment

INSTRUMENTATION:
- Advanced Instrument Cluster with hour meter, tachometer, fuel gauge, Diesel Exhaust Fluid gauge, engine coolant temperature gauge, diagnostic features and security lock-out
- Warning lights with alarms:
  - Critical system stop
  - Engine system
  - Hydraulic system
  - Electrical and diagnostic system
- Warning alarms:
  - Battery voltage (plus display)
  - Diesel Exhaust Fluid (DEF)
- Oil Service
- Indicator Light:
  - Engine preheat, Parking brake, Seat belt reminder

TRACK SYSTEM:
- Electro Hydraulic Controlled Hydrostatic 2-speed planetary final drive
- Positive drive imbedded steel rubber track belt
- Spring applied hydraulic release (SAHR) disc parking brake
- Dynamic braking

UNDERCARRIAGE:
- Rigid track frame mounting
- Permanently sealed (duo cone face seal) & lubricated idlers and rollers
- Triple flange lower rollers
- Single flange front and rear idlers
- Hydraulic track adjustment
- Track recoil spring
- Tapered track frame cover

OTHER STANDARD FEATURES:
- Lights - 2 front, 2 rear (halogen)
- Pre-wired for rotating beacon
- Service access hood, lockable
- Single point daily service
- Tail lights
- Options harness (only on EH models)
- Remote Oil and Fuel Filters
- Debris Ingression Prevention Sealing
- Heavy Duty Rear Door
- Bucket Cylinder Guards
- Block Heater 120V - USA

C245 TIER 4 FINAL COMPACT TRACK LOADER
US PRICE LIST

Models

COMMERCIAL MODEL	VERSION	MODEL	Weight	Factory Data	List Price
C245 T4B-C	T4B-C	C245	10,000 LB		$90,764.00

C245 TIER 4 FINAL COMPACT TRACK LOADER
US PRICE LIST

Factory Supplied Options

Order Code	Description	Weight	Factory Data	List Price

PACKAGE

SD_T9999 NEW HOLLAND CTL/SSL PACKAGES

		761610	761610 EH2-Basic-ROPS **E-H CONTROLS** **E-H CONTROL 2SPD** **FRONT ELEC/MULTI-FUNC** **HEAVY DUTY REAR DOOR** **MANUAL COUPLER** **OPEN NO HEAT OR HVAC** **SUSPENSION SEAT** **STEEL LIGHTS W/ TS** **BLOCK HEATER 120V-USA** **LAP BAR**			($8,000.00)
		761616	761616 EH2-Deluxe-Air Cab **E-H CONTROLS** **E-H CONTROL 2SPD** **FRONT ELEC/MULTI-FUNC** **HEAVY DUTY REAR DOOR** **HEAVY DUTY HYDRAULIC COUPLER** **HVAC-GLASS DOOR** **AIR SUSPENSION SEAT** **STEEL LIGHTS W/ TS** **BLOCK HEATER 120V-USA** **LAP BAR#**			($8,000.00)
		761618	761618 FC2-Basic-ROPS **FOOT CONTROLS** **MECH CONTROL 2SPD** **FRONT ELEC/MULTI-FUNC** **HEAVY DUTY REAR DOOR** **MANUAL COUPLER** **OPEN NO HEAT OR HVAC** **SUSPENSION SEAT** **STEEL LIGHTS W/ TS** **BLOCK HEATER 120V-USA** **LAP BAR**			($8,000.00)

C245 TIER 4 FINAL COMPACT TRACK LOADER
US PRICE LIST

		761621	761621 FC2-Plus-Cab **FOOT CONTROLS#** **MECH CONTROL 2SPD#** **FRONT ELEC/MULTI-FUNC#** **HEAVY DUTY REAR DOOR** **HEAVY DUTY HYDRAULIC COUPLER#** **HVAC-GLASS DOOR#** **SUSPENSION SEAT#** **STEEL LIGHTS W/ TS#** **BLOCK HEATER 120V-USA#** **LAP BAR#**			($8,000.00)
		761624	761624 FC2-Elite-Air Cab **FOOT CONTROLS#** **MECH CONTROL 2SPD#** **PERF w/FRONT ELEC MULTI FUNCTION, SELF LEVEL, RIDE CONTROL** **HEAVY DUTY REAR DOOR#** **HEAVY DUTY HYDRAULIC COUPLER#** **HVAC-GLASS DOOR#** **AIR SUSPENSION SEAT#** **STEEL LIGHTS W/ TS#** **BLOCK HEATER 120V-USA#** **LAP BAR#**			($8,000.00)
		761628	761628 EH2-Limited-Air Cab **E-H CONTROLS#** **E-H CONTROL 2SPD#** **HIGH FLOW PLUS SELF LEVEL, RIDE CONTROL** **HEAVY DUTY REAR DOOR#** **HEAVY DUTY HYDRAULIC COUPLER#** **HVAC-GLASS DOOR#** **AIR SUSPENSION SEAT#** **STEEL LIGHTS W/ TS#** **BLOCK HEATER 120V-USA#** **LAP BAR#**			($8,000.00)
		761634	761634 EH2-Elite-Air Cab **E-H CONTROLS#** **E-H CONTROL 2SPD#** **PERF w/FRONT ELEC, SELF LEVEL, RIDE CONTROL#** **HEAVY DUTY REAR DOOR#** **HEAVY DUTY HYDRAULIC COUPLER#** **HVAC-GLASS DOOR#** **AIR SUSPENSION SEAT#** **STEEL LIGHTS W/ TS#** **BLOCK HEATER 120V-USA#** **LAP BAR#**			($8,000.00)

NEW HOLLAND CONSTRUCTION

C245 TIER 4 FINAL COMPACT TRACK LOADER
US PRICE LIST

		761635	761635 EH2-Limited HF Air Cab **E-H CONTROLS#** **E-H CONTROL 2SPD#** **ENHANCED HIGH FLOW#** **HEAVY DUTY REAR DOOR#** **REINFORCED HYDRAULIC COUPLER#** **HVAC-GLASS DOOR#** **AIR SUSPENSION SEAT#** **STEEL LIGHTS W/ TS#** **BLOCK HEATER 120V-USA#** **LAP BAR#**			($8,000.00)
		761637	EH2-ELITE HF-AIR CAB **E-H CONTROLS#** **E-H CONTROL 2SPD#** **HIGH FLOW W/ MULTI-FUNCTION FRONT ELECTRIC#** **HEAVY DUTY REAR DOOR#** **HEAVY DUTY HYDRAULIC COUPLER#** **HVAC-GLASS DOOR#** **AIR SUSPENSION SEAT#** **STEEL LIGHTS W/ TS#** **BLOCK HEATER 120V-USA#** **LAP BAR#**			($8,000.00)

CONTROLS AND TRANSMISSION

SD_01100 CONTROLS LEVEL

		761029	2 Speed Mechanical Controls **Available in "H Pattern" Hand Controls or Hand and Foot Controls.**			($2,095.00)
		761031	2 Speed E-H Controls **Electro-Hydraulic Switchable (ISO-H Pattern) Controls with Two Speed**			No Charge

SD_01401 DRIVE CONTROL TYPE

		761040	Hand Controls **H Pattern, ONLY. Select Mechanical Controls (761029)**			No Charge
		761041	Hand and Foot Controls **ONLY Select with Mechanical Controls (761029)**			No Charge
		761042	E-H Controls **ONLY Select with E-H Controls (761031)**			No Charge

NEW HOLLAND CONSTRUCTION

C245 TIER 4 FINAL COMPACT TRACK LOADER
US PRICE LIST

ROPS/CAB

SD_05009 CAB

		761043	Open Cab (No Heat or HVAC) **with top window and keyed start**			No Charge
		761045	Enclosed Cab with HVAC **Includes side windows, front glass door with wiper, shoulder belt, radio with speakers and keyless start**			$5,664.00
		761183	Enclosed Cab w/HVAC -Demo Door **Includes side windows, 1/2" polycarbonate (will not shatter like glass), front door with wiper, shoulder belt, radio wiith speakers, and keyless start**			$7,445.00

SD_05016 OPEN CAB TRIM

		X05016X	No Open Cab Interior Trim Pkg			No Charge
		761186	Open Cab Interior Trim Package **For use with Open Cab. Covers interior sides and rear.**			$310.00

SD_05185 CAB SEAT

		761052	Suspension Seat (Vinyl)			No Charge
		761062	Air Ride Suspension Seat **Fabric with temperature control may not be ordered with Open Cab option 761043**			$582.00

SD_K5104 LAP BAR-NH

		761224	LAP BAR NEW HOLLAND **Lap Bar Installed from Factory. Seat belt included. Sensor moved from seat belt to the lap bar for machine operation (lap bar must be down to operate).**			No Charge
		XK5104X	NO LAP BAR NEW HOLLA **Comes with seat belt only. Seat belt must be engaged for machine operation.**			($265.00)

COUPLER

SD_K5101 COUPLERS

		726003	Manual Coupler			No Charge
		761206	Heavy Duty Hydraulic Coupler			$1,027.00

C245 TIER 4 FINAL COMPACT TRACK LOADER
US PRICE LIST

BLOCK HEATER

SD_02086 BLOCK HEATER

		761048	Block Heater (120V)			No Charge

TURN SIGNALS

SD_06056 EXTERIOR LIGHTS

		463739	STEEL LIGHTS WITH TURN SIGNALS			No Charge

OPERATORS MANUAL

SD_32035 LANGUAGE OPTIONS

		761085	English			No Charge
		761088	French			No Charge
		761097	Spanish			No Charge

OPTIONAL PACKAGES

SD_01201 OPTION PACKAGES

		761034	Front Electric/Multi-Function **Contains Front Electric (Multi-function) for Standard Auxiliaries**			No Charge
		761035	Performance w/Front Electric **Contains ON/OFF one-way self leveling, ride control, and multi-function electric control**			$1,172.00
		761036	High Flow Package **Contains High Flow hydraulics with multi-function electric control**			$1,874.00
		761037	High Flow Plus Package **Contains multi-function, high flow hydraulics, on/off one-way self-leveling and glide ride**			$3,047.00
		761039	Enhanced High Flow Package **Only available with units equipped with EH Controls** **Contains 4000 PSI High Flow Hydraulics, Second Auxiliaries, Multi-Function Electric Control, High Flow Hydraulics, ON/OFF One-way Self Leveling and Glide Ride**			$6,317.00

NEW HOLLAND CONSTRUCTION

C245 TIER 4 FINAL COMPACT TRACK LOADER
US PRICE LIST

TRACK BELT OPTIONS

SD_10015 TRACK OPTIONS

		8500147	450 mm (17.7 inch) **Standard Duty rail type track with zig zag tread pattern.** **78" OTW** **100 Pitch**			No Charge
		8500187	450 BELT HD **Heavy Duty rail type track with HH tread pattern.** **78" OTW** **100 pitch**			$398.00

FRONT ATTACHMENTS

BUCKETS

SD_K5231 BUCKETS

		761126	78" Dirt & Foundry Bucket **(1981 mm), 18.4 cu. ft. heaped capacity**			$1,038.00
		761133	78" Low Profile Extended **(1981 mm), 18.6 cu. ft. Heaped Capacity**			$1,086.00
		761134	84" Low Profile Extended **(2134 mm), 20.2 cu. ft. Heaped Capacity**			$1,173.00
		761137	84" Light Material Bucket **(2134 mm), 27.9 cu. ft. Heaped Capacity**			$1,047.00
		761140	84" Manure-Slurry Bucket **(2134 mm), 22.5 cu. ft. Heaped Capacity**			$995.00
		761143	78" Heavy Duty Dirt Bucket **(1981 mm), 15.9 cu. ft. Heaped Capacity**			$1,538.00
		761144	84" Heavy Duty Dirt Bucket **(2134 mm), 19.4 cu. ft. Heaped Capacity**			$1,589.00
		XK5231X	No Bucket			No Charge
		761255	78" HD Ext. w/ SmartFit Teeth **(1981 mm) 18.9 cu ft. Heaped Capacity**			$1,898.00
		761256	84" HD Ext. w/ SmartFit Teeth **(2134 mm) 20.5 cu. ft. Heaped Capacity**			$2,032.00

BOLT ON CUTTING EDGE

SD_K6399 BOLT ON CUTTING EDGE

		761148	78" Bolt on Cutting Edge			$259.00
		761149	84" Bolt on Cutting Edge			$279.00
		XK6399X	No Bolt on Cutting Edge			No Charge

C245 TIER 4 FINAL COMPACT TRACK LOADER
US PRICE LIST

ADDITIONAL EQUIPMENT

SD_34008 BATTERY DISCONNECT

		761074	Battery Disconnect			No Charge

ADDITIONAL EQUIPMENT

SD_39021 REAR DOOR

		761211	Heavy Duty Rear Door - NH			$440.00

MOVE TO BIC

SPECIAL PAINT

SD_50103 SPECIAL PAINT

		726029	Special Paint **The price listed is for a color change only from the standard factory color: CNH #86572648 (NH-Yellow). All Special Color formulations will be applied using approved factory processes and materials. Metallic or other special formulations and/or materials are not available. A color chip must be provided to CNH for non CNH colors. A minimum lead time of 8 business weeks will be required prior to production. Unless specified, regular production decals will be applied. Requests can be made that decals not be applied. However, SAFETY decals MUST BE APPLIED in all cases. The following components remain CNH grey: lift & bucket cylinders, front coupler and attachments, ROPS, side screens, upper chassis and control links, undercarriages and brackets, and rear door.**			$2,999.00
		X50103X	No Special Paint			No Charge

C245 TIER 4 FINAL COMPACT TRACK LOADER
US PRICE LIST

TELEMATICS

SD_K6450 TELEMATICS

		761198	NH FleetForce On-board **Unit comes factory fit with wiring and modem.** **To order the Service Subscription contact Service Parts.**			$816.00
		XK6450X	No Telematics			No Charge

NEW HOLLAND CONSTRUCTION

C245 TIER 4 FINAL COMPACT TRACK LOADER
US PRICE LIST

Factory Supplied Attachments

Order Code			Description	Weight	Factory Data	List Price
BASIC ATTACHMENTS						
		735006006	Beacon Kit Install Time = 0.2 hours	1 LB		$154.00
		735007006	4-Corner LED Strobe Kit Install Time = 0.5 hours Must order connector. Reference dependency matrix.	24 LB		$500.00
		735011006	Glass Front Door Kit Install Time = 2.0 hours Center mounted wiper Requires three point seat belt. Must order applicable harness. Reference dependency matrix.	182 LB		$1,543.00
		735012006	Demo Front Door Kit Install Time = 2.0 hours 1/2" polycarbonate door (will not shatter like glass) Center mounted wiper Requires three point seat belt. Must order applicable harness. Reference dependency matrix.	182 LB		$2,711.00
		735013006	Cab Side Windows Kit Install Time = 1.0 hours	139 LB		$865.00
		735016006	Radio Kit Install Time = 2.0 hours Must order applicable harness. Reference dependency matrix.	16 LB		$413.00
		735019106	KIT, TURN SIGNAL For vertical lift machines. Plastic lights	7 LB		$247.00
		735020186	KIT ROAD LIGHTS Install Time = 2.5 hours Added front lights with turn signals that mount on the loader booms. Added rear lights with signals. (Reference image in SSL/CTL Brochure)	32 LB		$608.00
		735021046	Multi-Function Front Electrical Mech Kit Install Time = 2.0 hours For use in mechanical & EH control machines Reference Dependency Matrix for additional component requirements.	8 LB		$274.00
		735023006	Ride Control Kit Install Time = 4.0 hours Must order applicable handle. Reference dependency matrix.	33 LB		$481.00
		735024046	Hydraulic Coupler Kit Install Time = 8.0 hours Must order applicable harness. Reference dependency matrix. For converting manual coupler to hydraulic coupler.	152 LB		$1,236.00
		735025056	High Flow Auxiliary Kit Must order applicable harness. Reference dependency matrix.	192 LB		$2,519.00
		735027056	Second Hydraulic Front Auxiliary Kit Install Time = 8.0 hours	99 LB		$1,029.00
		735036036	4-Point Lift Hook Kit Install Time = 2.0 hours	20 LB		$222.00
		735037046	Single Point Lift Hook Kit Install Time = 4.0 hours	269 LB		$1,029.00

NEW HOLLAND CONSTRUCTION

C245 TIER 4 FINAL COMPACT TRACK LOADER
US PRICE LIST

		735038006	FOPS Level 2 Modification Kit Install Time = 1.0 hours	61 LB		$343.00
		735039076	Extra Counterweight Kit Install Time = 0.5 hours	659 LB		$1,168.00
		735042006	Interior Mirror Kit Install Time = 0.5 hours	4 LB		$58.00
		735045046	Foot Control Conversion Kit Install Time = 8.0 hours Converting to Hand&Foot control from Hand (H-Pattern) Mechanical control units only.	52 LB		$615.00
		735046046	Hand Control Conversion Kit Install Time = 6.0 hours Convert to Hand (H-Pattern) from Hand&Foot Mechanical control only. For units built after S/N NFM418327.	76 LB		$824.00
		735047006	120V Block Heater Kit Install Time = 0.5 hours	6 LB		$206.00
		735048006	220V Block Heater Kit Install Time = 0.5 hours	6 LB		$206.00
		735056016	78" Dirt & Foundry Bucket (1981 mm), 17.7 cu. ft. Heaped Capacity	429 LB		$1,038.00
		735142006	Cylinder Guard Kit Install Time = 0.5 hours Provides protection to the loader bucket dump/curl cylinders in severe operating conditions.	21 LB		$739.00
		735146016	Three Point Seat Belt	4 LB		$233.00
		735150006	Open Cab Interior Trim Kit Install Time = 1.0 hours	25 LB		$372.00
		735153006	High Beam Light Kit 2 additional work lights	11 LB		$199.00
		735158206	HVAC Complete Install Time = 27.7 hours Must order applicable harness. Reference dependency matrix.	396 LB		$2,951.00
		735160016	Fender Extensions - Large Frame Install Time = 1.5 hours	45 LB		$334.00
		735168016	Aspirator (Precleaner) Kit Install Time = 2.0 hours	39 LB		$683.00
		735179006	Lap Bar Kit Install Time = 2.0 hours	40 LB		$600.00

Heavy Duty Dirt Bucket

		735073016	78" Heavy Duty Dirt Bucket (1981 mm), 15.5 cu. ft. Heaped Capacity	526 LB		$1,538.00
		735074016	84" Heavy Duty Dirt Bucket (2134 mm), 17.0 cu. ft. Heaped Capacity	550 LB		$1,589.00

Light Material Bucket

		735067016	84" Light Material Bucket (2134 mm), 27.5 cu. ft. Heaped Capacity	532 LB		$981.00

Low Profile Extended Bucket

		735063016	78" Low Profile Extended Bucket (1981 mm), 19.1 cu. ft. Heaped Capacity	531 LB		$1,086.00

C245 TIER 4 FINAL COMPACT TRACK LOADER
US PRICE LIST

		735064016	84" Low Profile Extended Bucket (2134 mm), 20.5 cu. ft. Heaped Capacity	607 LB		$1,173.00

Manure-Slurry Bucket

		735070016	84" Manure-Slurry Bucket (2134 mm), 22.6 cu. ft. Heaped Capacity	535 LB		$995.00

Pallet Fork

		735075006	Pallet Fork Frame w/48" Tines	540 LB		$1,265.00

SmartFit Teeth

		735185006	78" HDE Bucket w/ Teeth (1981 mm) 18.9 cu. ft. Heaped Capacity	697 LB		$1,898.00
		735186006	84" HDE Bucket w/ Teeth (2134 mm) 20.5 cu. ft. Heaped Capacity	728 LB		$2,032.00

		735022116	Kit Self-Level Install Time = 4.0 hours	30 LB		$485.00

ATTACHMENTS

NEW HOLLAND AGRICULTURE

NEW HOLLAND CONSTRUCTION

CNH INDUSTRIAL GENUINE PARTS

GENERAL INFORMATION

NEW HOLLAND AGRICULTURE

NEW HOLLAND CONSTRUCTION

CNH INDUSTRIAL GENUINE PARTS

HOW TO USE THIS CATALOG

1 Unit includes hoses and quick disconnects.

	PART NUMBER	WEIGHT LB
60" UTILITY SCRAP GRAPPLE	47443885	808
66" UTILITY SCRAP GRAPPLE	47443886	858
72" UTILITY SCRAP GRAPPLE	47443887	905

2

3

MODEL COMPATIBILITY	L213 L215 L216	L218	L220 L221	L223	L225 L228	L230 L234		C227		C232 C234 C237 C238 C245	4 REQ'D EQUIPMENT						
	L150	L160 L170	L175	L180	L185	L190	C175		C185 C190		STD FLOW	HIGH FLOW	EHF	CASE DRAIN	MFH	DEMO DOOR	2ND AUX
60" UTILITY SCRAP GRAPPLE	•										R						
66" UTILITY SCRAP GRAPPLE	•	•	•								R						
72" UTILITY SCRAP GRAPPLE		•	•				•				R						

1. Unit refers to the attachment. All New Holland Construction attachments are designed specifically for New Holland Construction machines and come standard with the correct quick disconnects, hose length and hose routing for proper fit up.
2. Operating weight of the attachment
3. Provides the New Holland Construction models for which each attachment is compatible.
4. Provides the requirements for the New Holland Construction machine model. For example, if the machine needs to have High Flow auxiliary hydraulics, there will be in an “R” in that column.

Required Equipment Legend:

STD FLOW: Standard flow auxiliary hydraulics

HIGH FLOW: High flow auxiliary hydraulics

EHF: Enhanced High Flow auxiliary hydraulics

CASE DRAIN: Separate connection for auxiliary hydraulics

MFH: Multi Function control kit

DEMO DOOR: Demolition door

2ND AUX: Second auxiliary or attachment valve with extra auxiliary hydraulic function

R: Required

O: Optional

NEW HOLLAND OEM ATTACHMENT ADVANTAGE

Our OEM attachments are tested and configured to match OEM specifications to deliver performance and fit. OEM attachments are plug and play: meaning our engineers make sure the connections and configurations are ready from the start and avoid retrofits – saving customers time and money.

SKID STEER LOADERS/ COMPACT TRACK LOADERS

NEW HOLLAND AGRICULTURE

NEW HOLLAND CONSTRUCTION

CNH INDUSTRIAL GENUINE PARTS

INDEX

SKID STEER LOADERS/COMPACT TRACK LOADERS

LS120, L120/LS125, L125 Attachments SS-2-6
Adapter Plate SS-7
Auger SS-8-10
Auto Rake SS-11
Backhoe SS-12
Backhoe Options & Accessories SS-13-15
Backhoe Specifications SS-16
Bale Handler SS-17
Bale Spear SS-18
Broom, Angle SS-19
Broom, Hopper SS-20
Broom, Pick-Up Standard and VS Vacuum SS-21
Bucket, 4X1 (Utility) SS-22
Bucket, 4X1 (Construction) SS-23
Bucket, Power Side Discharge SS-24
Chipper SS-25
Cold Planer, High Flow SS-26-27
Cold Planer, Standard Flow SS-28
Cold Planer - Specifications SS-29
Cold Planer, LT Series SS-30-31
Concrete Bucket SS-32
Concrete Claw SS-33
Dozer Blade SS-34
Grading Box, Laser SS-35-36
Grapple, Brush Construction SS-37-38
Grapple, Brush Utility SS-39-40
Grappple, Farm SS-41
Grapple, Large Capacity SS-42
Grapple, Log SS-43
Grapple, Scrap Construction SS-44-45
Grapple, Scrap Utility SS-46
Harley Power Box Rake® SS-47
Hydraulic Hammer SS-48-49
Lift Boom SS-50
Load Monitor SS-51
Manure Fork & Manure Fork With Grapple ... SS-52
Manure Scraper SS-53
Mulcher SS-54-55
Pallet Fork SS-56
Pallet Fork (ROPS) SS-57
Pallet /Nursery Fork - Hydraulic Positioning SS-58
Post Driver SS-59
Post Puller SS-60
Preparator® Landscape Rake SS-61-62
Rear Stabilizer SS-63-64
Rock Bucket SS-65
Rock Saw SS-66-67
Root Rake SS-68
Rotary Cutter, Ammbusher SS-69
Rotary Cutter, Extreme SS-70
Rotary Cutter SS-71
Silage Defacer SS-72
Silt Fence Installer SS-73
Skid Hoe SS-74
Snow Blade (Standard Duty) SS-75
Snow Blade (Heavy Duty) SS-76
Snow Blade/Pusher (Hydraulic) SS-77-78
Snow Blade, Trip Edge SS-79
Snow Blower, High Flow SS-80-81
Snow Blower, Standard Flow SS-82
Snow Bucket SS-83
Snow Push SS-84
Snow Push - Sectional SS-85
Snow V-Blade SS-86-87
Stump Grinder SS-88-89
Three-Point Hitch SS-90
Tiller SS-91
Tilt-Attach SS-92
Tracks, Steel SS-93
Tree Puller SS-94
Tree Shovel SS-95
Tree Spade SS-96-97
Trencher SS-98-100
Vibratory Roller (Padfoot Drum) SS-101
Vibratory Roller (Smooth Drum) SS-102
Water Kit SS-103

LS120, L120/LS125, L125 ATTACHMENTS

SKID STEER LOADERS/COMPACT TRACK LOADERS

All attachments include LS120/LS125 mounting bracket. Hydraulic attachments include hoses and quick couplers.

AUXILIARY BOOM HYDRAULICS REQUIRED	PART NUMBER	WEIGHT LB
42" 4X1 Bucket for LS120, LS125, L120, L125	87041242	268

- 5 cu. ft. capacity
- 3 carbon steel blades

	PART NUMBER	WEIGHT LB
Pallet Fork for LS120, LS125, L120, L125	87041244	165

- 30" shaft mount forks
- Adjustable, self-leveling forks

AUXILIARY BOOM HYDRAULICS REQUIRED	PART NUMBER	WEIGHT LB
Nursery Fork for LS120, LS125, L120, L125	87041245	175

- Grabs up to 36" dia. tree ball
- Single Hydraulically actuated fork
- 32" reach

	PART NUMBER	WEIGHT LB
Leveler/Carrier for LS120, LS125, L120, L125	87041257	146

- Grades and backfills
- 49" X 36" platform
- Sifts material
- Carry-all usage

42" 4 in 1 Bucket

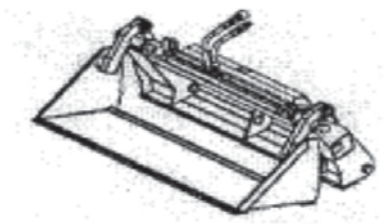

Pallet Fork

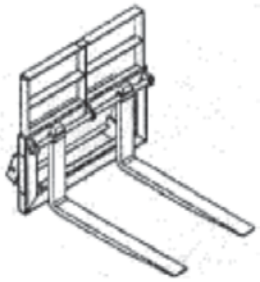

Nursery Fork

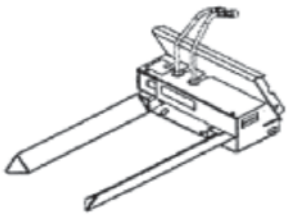

Leveler/Carrier

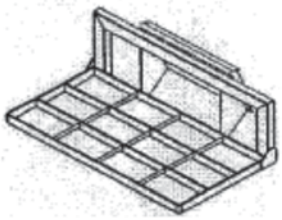

LS120, L120/LS125, L125 Attachments (Continued next page)

LS120, L120/LS125, L125 ATTACHMENTS

SKID STEER LOADERS/COMPACT TRACK LOADERS

All attachments include LS120/LS125 mounting bracket. Hydraulic attachments include hoses and quick couplers.

AUXILIARY BOOM HYDRAULICS REQUIRED	PART NUMBER	WEIGHT LB
48" Dozer Blade for LS120, LS125, L120, L125	87041260	190

- Gravel and dirt grading
- Snow removal
- 4-sided wear edge
- Hydraulic angling

AUXILIARY BOOM HYDRAULICS REQUIRED	PART NUMBER	WEIGHT LB
Auger Drive - 2" Hex Drive for LS120, LS125, L120, L125	87041261	175
Auger Drive - 2-9/16" Round Drive for LS120, LS125, L120, L125	87041262	175

- 2" Hex or 2-9/16" round drive
- Planetary drive
- Use up to 12" dia. auger (not included, see below)

COMPLETING PACKAGES	PART NUMBER	WEIGHT LB
6" Auger HDF type, 2" hex drive	9863626	40
9" Auger HDF type, 2" hex drive	9863627	86
12" Auger HDF type, 2" hex drive	9863628	115
6" Auger HDF type, 2-9/16" round drive	9863606	40
9" Auger HDF type, 2-9/16" round drive	9863607	86
12" Auger HDF type, 2-9/16" round drive	9863608	115

48" Dozer Blade

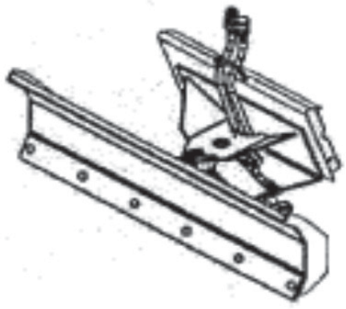

Auger Drive

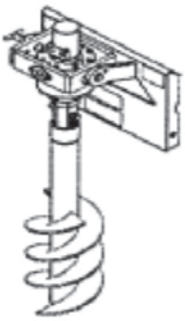

LS120, L120/LS125, L125 Attachments (Continued next page)

LS120, L120/LS125, L125 ATTACHMENTS

SKID STEER LOADERS/COMPACT TRACK LOADERS

All attachments include LS120/LS125 mounting bracket. Hydraulic attachments include hoses and quick couplers.

AUXILIARY BOOM HYDRAULICS REQUIRED	PART NUMBER	WEIGHT LB
42" Scrap Grapple for LS120, LS125, L120, L125	87045464	335

- Grease zerks at all pivot points
- Replaceable wear bushings on the grapple pivots
- Removable grapple

	PART NUMBER	WEIGHT LB
42" Rock Bucket for LS120, LS125, L120, L125	87045465	152

- 1-1/8" dia. high strength alloy tines
- 2" spacing between tines

	PART NUMBER	WEIGHT LB
Attachment Mount Adapter Bracket for LS120, LS125, L120, L125 (fits over existing mount bracket)	87311519	60

- Fits over existing mount bracket to pick up common attachments offered for mini stand-on/walk-behind loaders (such as Toro Dingo)
- Not required for any attachments offered by New Holland for LS120/LS125

	PART NUMBER	WEIGHT LB
Attachment Mount Conversion Bracket	87311520	52

- Replaces existing mount bracket to pick up common attachments offered for mini stand-on/walk-behind loaders (such as Toro Dingo)
- Cannot be used for any attachments offered by New Holland for LS120/LS125

42" Scrap Grapple

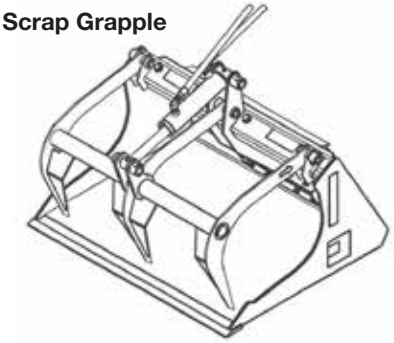

42" Rock Bucket

Attachment Mount Adapter Bracket

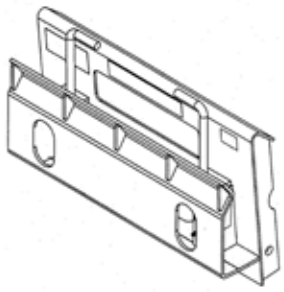

Attachment Mount Conversion Bracket

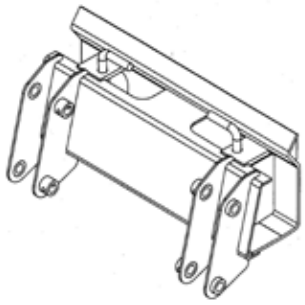

LS120, L120/LS125, L125 Attachments (Continued next page)

LS120, L120/LS125, L125 ATTACHMENTS

SKID STEER LOADERS/COMPACT TRACK LOADERS

All attachments include LS120/LS125 mounting bracket. Hydraulic attachments include hoses and quick couplers.

	PART NUMBER	WEIGHT LB
43" FORK - less grapple for L120, L125	87488568	174
43" FORK - with grapple for L120, L125 – Auxiliary hydraulics required.	86640923	292

- 6 detachable tines
- Handles loose material like hay, straw, limbs, etc.

	PART NUMBER	WEIGHT LB
TREE SHOVEL for L120, L125	87488569	185

- 20" for digging, transplanting, loading, or placing trees

AUXILIARY BOOM HYDRAULICS REQUIRED	PART NUMBER	WEIGHT LB
42" BRUSH GRAPPLE for L120, L125 – Auxiliary hydraulics required.	87488570	270

- Light brush clearing and debris clean up

43" Fork

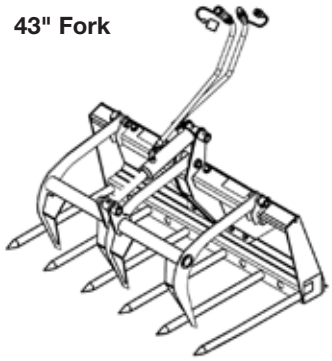

Tree Shovel

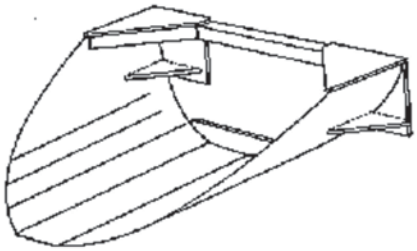

42" Brush Grapple

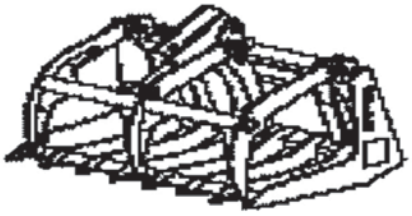

LS120, L120/LS125, L125 Attachments (Continued next page)

LS120, L120/LS125, L125 ATTACHMENTS

SKID STEER LOADERS/COMPACT TRACK LOADERS

All attachments include LS120/LS125 mounting bracket. Hydraulic attachments include hoses and quick couplers.

	PART NUMBER	WEIGHT LB
50" Light Material Bucket for LS120, LS125, L120, L125	87041240	212

- Use for snow and other light materials
- 8.4 cu ft. struck capacity

AUXILIARY BOOM HYDRAULICS REQUIRED	PART NUMBER	WEIGHT LB
60" Snow Blade for LS120, LS125, L120, L125	87041241	450

- Hydraulic angling
- Spring trip

50" Light Material Bucket

60" Snow Blade

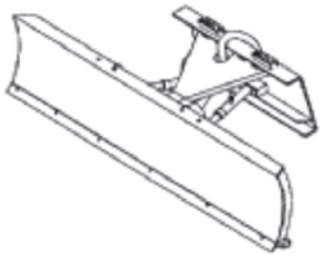

ADAPTER PLATE

SKID STEER LOADERS/COMPACT TRACK LOADERS

	PART NUMBER	WEIGHT LB
ADAPTER, SSL ATTACHMENT BLANK, Standard	84397477	75
ADAPTER, SSL ATTACHMENT BLANK, Heavy Duty	84397478	123

MODEL COMPATIBILITY	L213 L215 L216	L218	L220 L221	L223	L225 L228	L230 L234		C227		C232 C234 C237 C238 C245	REQ'D EQUIPMENT					
	L150	L160 L170	L175	L180	L185	L190	C175		C185 C190		STD FLOW	HIGH FLOW	CASE DRAIN	MFH	DEMO DOOR	2ND AUX
ADAPTER PLATE – Standard	•	•	•													
ADAPTER PLATE – Heavy Duty	•	•	•	•	•	•	•	•	•	•						

FEATURES

- Standard - 1/4" steel construction
- Heavy Duty - 3/8" construction with reinforced upper hitch bar

APPLICATIONS

- Used to adapt special attachments to skid steer coupler

Standard Duty

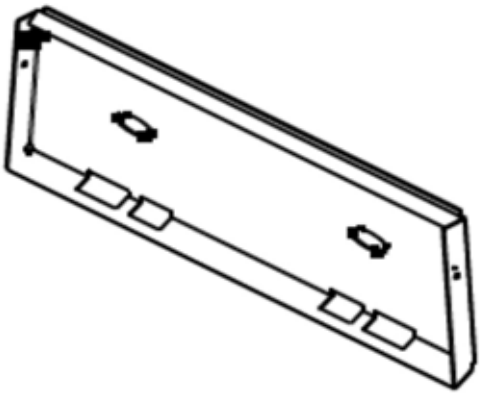

Heavy Duty

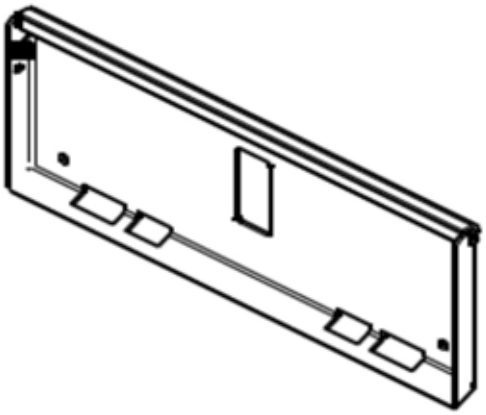

AUGER

SKID STEER LOADERS/COMPACT TRACK LOADERS

Unit includes mounting bracket, auger drive head, hoses and quick disconnects.
Must order bit for complete unit.

	PART NUMBER	WEIGHT LB
X1475R256 Drive Unit, 2-9/16" round output shaft	86977896	457
X1475H200 Drive Unit, 2" hex output shaft	86977897	457
X1975R256 Drive Unit, 2-9/16" round output shaft	86977899	457
X1975H200 Drive Unit, 2" hex output shaft	86977900	457
X2475H200 Drive Unit, 2" hex output shaft	47898619	457
X5075H200 Drive Unit, 2" hex output shaft (requires high flow)	87488582	586

MODEL COMPATIBILITY	L213 L215 L216			L218 L220	L221	L223 L225 L228		L230 L234			C227		C232 C234 C238 C245	REQ'D EQUIPMENT					
	L150	L160	L170 L175				L180 L185		L190	C175		C185 C190		STD FLOW	HIGH FLOW	CASE DRAIN	MFH	DEMO DOOR	2ND AUX
AUGER DRIVE, X1475	•	•	•	•	•	•	•	•	•	•	•	•	•	R					
AUGER DRIVE, X1975		•	•	•	•	•	•	•	•	•	•	•	•	R					
AUGER DRIVE, X2475					•	•	•	•	•		•	•	•	R	*				
AUGER DRIVE, X5075			•	•	•	•	•	•	•	•	•	•	•		R	R			

* X2475 may be operated as high flow up to 35 gpm

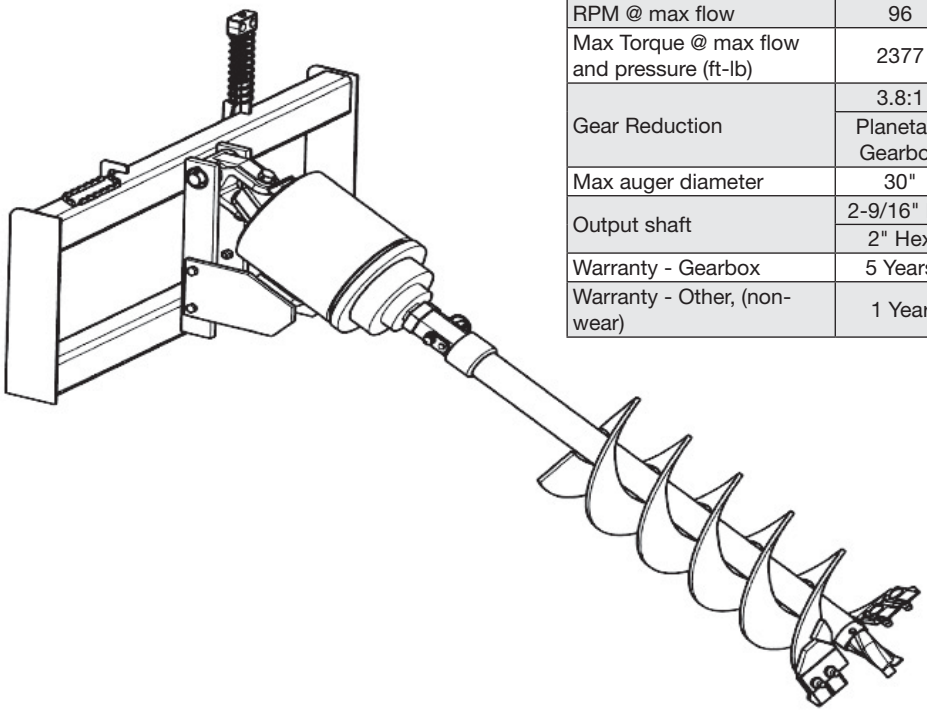

	SPECIFICATIONS			
Auger Model	X1475	X1975	X2475	X5075
Flow (gpm)	10 - 25	15 - 30	20 - 35	28 - 40
RPM @ max flow	96	100	73	85
Max Torque @ max flow and pressure (ft-lb)	2377	2769	3451	5069
Gear Reduction	3.8:1 Planetary Gearbox	3.8:1 Planetary Gearbox	3.8:1 Planetary Gearbox	6.1:1 Planetary Gearbox
Max auger diameter	30"	36"	36"	36"
Output shaft	2-9/16" Rd 2" Hex	2-9/16" Rd 2" Hex	2" Hex	2" Hex
Warranty - Gearbox	5 Years	5 Years	5 Years	5 Years
Warranty - Other, (non-wear)	1 Year	1 Year	1 Year	1 Year

Auger Options (Continued next page)

AUGER OPTIONS

HDF STYLE AUGERS 2-9/16" Round Coupler	PART NUMBER	WEIGHT LB
6" X 4' Auger bit	9863606	42
9" X 4' Auger bit	9863607	86
12" X 4' Auger bit	9863608	115
15" X 4' Auger bit	9863609	131
18" X 4' Auger bit	9863610	176
24" X 4' Auger bit	9863611	278
30" X 4' Auger bit	9863612	325
36" X 4' Auger bit	9863613	443

HDF STYLE AUGERS 2" Hex Coupler	PART NUMBER	WEIGHT LB
6" X 4' Auger bit	9863626	42
9" X 4' Auger bit	9863627	86
12" X 4' Auger bit	9863628	115
15" X 4' Auger bit	9863629	131
18" X 4' Auger bit	9863630	176
24" X 4' Auger bit	9863631	278
30" X 4' Auger bit	9863632	325
36" X 4' Auger bit	9863633	443

HDF STYLE AUGERS

For light to moderate ground conditions

- Fabricated boring head
- Hardened bolt-on teeth
- Hardened “fishtail” point
- Heavy-duty double flighting
- 4' overall length

HDC STYLE AUGERS 2-9/16" Round Coupler	PART NUMBER	WEIGHT LB
6" X 4' Auger bit	9863614	45
9" X 4' Auger bit	9863615	98
12" X 4' Auger bit	9863616	128
15" X 4' Auger bit	9863617	139
18" X 4' Auger bit	9863618	204
24" X 4' Auger bit	9863619	272
30" X 4' Auger bit	9863620	312
36" X 4' Auger bit	9863621	430

HDC STYLE AUGERS 2" Hex Coupler	PART NUMBER	WEIGHT LB
6" X 4' Auger bit	9863634	45
9" X 4' Auger bit	9863635	98
12" X 4' Auger bit	9863636	128
15" X 4' Auger bit	9863637	139
18" X 4' Auger bit	9863638	204
24" X 4' Auger bit	9863639	272
30" X 4' Auger bit	9863640	312
36" X 4' Auger bit	9863641	430

HDC STYLE AUGERS

For difficult gound conditions, compacted soils, heavy clay, asphalt, frozen ground fracturable rock

- HD cast boring head
- Hardened, drive-in teeth
- Hardened “fishtail” point
- Heavy-duty double flighting
- 4' overall length

Auger Options (Continued next page)

AUGER

SKID STEER LOADERS/COMPACT TRACK LOADERS

HTF STYLE AUGERS 2-9/16" Round Coupler	PART NUMBER	WEIGHT LB
18" X 4' Auger bit	9863622	144
24" X 4' Auger bit	9863623	198
30" X 4' Auger bit	9863624	264
36" X 4' Auger bit	9863625	349

HTF STYLE AUGERS 2" Hex Coupler	PART NUMBER	WEIGHT LB
18" X 4' Auger bit	9863642	144
24" X 4' Auger bit	9863643	198
30" X 4' Auger bit	9863644	264
36" X 4' Auger bit	9863645	349

HTF STYLE AUGERS

For tree and shrub planting

- Fabricated boring head
- Two-diameter design
- Hardened, bolt-on teeth
- Hardened “fishtail” point
- HD double flighting
- 4' overall length

SRR ROCK AUGERS 2" Hex Coupler	PART NUMBER	WEIGHT LB
6" X 4' Rock Auger	47904378	82
9" X 4' Rock Auger	47904381	110
12" X 4' Rock Auger	47904382	137
16" X 4' Rock Auger	47904383	171
18" X 4' Rock Auger	47904384	192
20" X 4' Rock Auger	47904385	239
24" X 4' Rock Auger	47904386	285
30" X 4' Rock Auger	47904387	315
36" X 4' Rock Auger	47904388	414

SRR ROCK AUGERS

For solid, fracturable rock,
frozen ground and compacted soils

- Bullet style teeth
- Fabricated boring head
- HD single flighting
- 2" hexagon collar only
- .75" thick bottom flight and a hardface outer edge
- 4' overall length

AUGER EXTENSIONS AND ADAPTERS	PART NUMBER	WEIGHT LB
2" Hex female x 2-9/16" Round male	9863646	16
2-9/16" Round female x 2" Hex male	9863647	15
2" Hex female x 2" Round male	87042596	14
2-9/16" Round female x 2" Round male	87042597	9
12" Extension , 2" Hex	87042601	20
24" Extension, 2" Hex	87042602	32
12"Extension, 2-9/16" Round	87042598	21
24" Extension, 2-9/16" Round	87042600	39
48" Extension, 2" hex	84514060	57

AUTO RAKE

SKID STEER LOADERS/COMPACT TRACK LOADERS

Unit includes mounting plate, hoses and quick couplers.

STANDARD AUXILIARY BOOM HYDRAULICS REQUIRED	PART NUMBER	WEIGHT LB
AUTO RAKE 66"	86563455	1495
AUTO RAKE 76"	86563456	1695

MODEL COMPATIBILITY	L213 L215 L216		L218	L220 L221	L223	L225 L228	L230 L234		C227			C232 C234 C237 C238 C245	REQ'D EQUIPMENT					
	L150	L160	L170	L175	L180	L185	L190	C175		C185	C190		STD FLOW	HIGH FLOW	CASE DRAIN	MFH	DEMO DOOR	2ND AUX
AUTO RAKE, 66"	•	•	•	•	•			•	•				R					
AUTO RAKE, 76"			•	•	•	•	•	•	•	•	•	•	R					

FEATURES

- Grooms and finishes soil for seeding and sodding
- Picks up rocks from 3/4" to 6" in diameter and collects them in the hopper
- Breaks up clods and levels soil
- Easy to dump collected debris, simply raise the loader boom and open the shroud hydraulically

REQUIREMENTS FOR OPERATION

- Standard auxiliary hydraulics

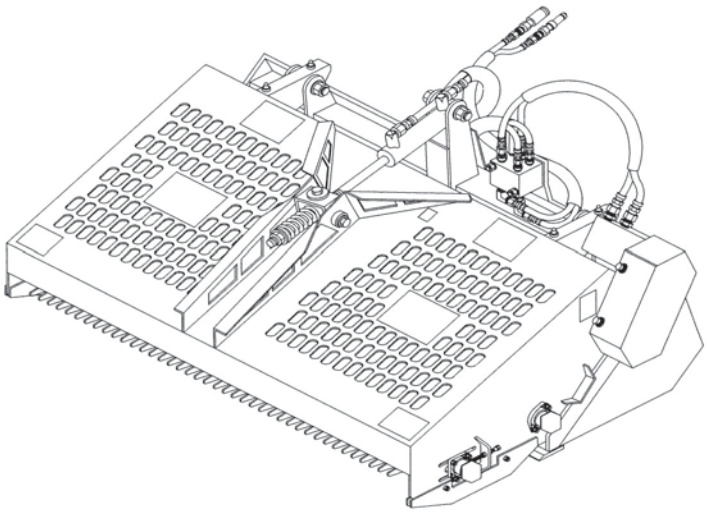

WORKING WIDTH	66 in.	76 in.
Overall Width	73.8 in.	83.8 in.
Height	40 in.	40 in.
Depth	64 in.	64 in.
Hopper Capacity	13 cu. ft.	15 cu. ft.

BACKHOE

SKID STEER LOADERS/COMPACT TRACK LOADERS

Unit includes fold-down stabilizers. Vertical stabilizer may be substituted on 509B, 511B, 611B (extra charge). Must order mounting kit, stabilizer pad option as indicated and bucket for complete unit. Backhoes are not compatible with cab or demolition doors. Doors must be removed for backhoe operation.

AUXILIARY BOOM HYDRAULICS REQUIRED. REAR COUNTERWEIGHTS OR REAR STABILIZERS RECOMMENDED.	PART NUMBER	WEIGHT LB
Model 485 Backhoe (Fold-down stabilizers included with dirt pads only. Bolt-on rubber pads are optional.)	87498474	1010
Model 509B Backhoe (Must select pad option for fold-down or vertical stabilizers)	47670748	1525
Model 511B Backhoe (Must select pad option for fold-down or vertical stabilizers)	47670752	1694
Model 611B Backhoe (Must select pad option for fold-down or vertical stabilizers)	47670754	1930

MOUNTING KITS (Must Order One to Complete Unit)

Mounting kit for L150	87313148	280
Mounting kit for L160, L170, L175, C175	87313149	280
Mounting kit for L180, L185, C185	87313150	280
Mounting kit for L190, C190	87313151	280
Mounting kit for L213, L215, L216	84420962	250
Mounting kit for L218, L220, L221 (see table)	84420963	275
Mounting kit for L221, L223, L250, L230, L234, C227, C232, C234, C237, C238, C245 (see table)	84420965	270

MODEL COMPATIBILITY	L150	L160 L170	L175	L180 L185	L190	C175	C185	C190	L213 L215 L216	L218 L220	L221 w/10 X16.5	L221 w/12 X16.5	L223 L225 L228	L230 L234	C227	C232 C234 C237 C238 C245	REQ'D EQUIPMENT			
																	STD FLOW	HIGH FLOW	CASE DRAIN	MFH
485 BACKHOE	•	•							•	•							R			
509B BACKHOE		•	•	•	•	•	•	•		•	•	•	•	•	•	•	R			
511B BACKHOE		•	•	•	•	•	•	•		•	•	•	•	•	•	•	R			
611B BACKHOE				•	•		•	•					•	•		•	R			
COMPLETE MOUNTING KIT (BACKHOE AND LOADER HALVES)																				
MOUNTING KIT - 87313148	•																			
MOUNTING KIT - 87313149		•	•			•														
MOUNTING KIT - 87313150				•			•													
MOUNTING KIT - 87313151					•			•												
MOUNTING KIT - 84420962									•											
MOUNTING KIT - 84420963										•	•									
MOUNTING KIT - 84420965												•	•	•	•	•				
MOUNTING BRACKETS (LOADER HALF ONLY)																				
MOUNTING BRKT - 87313154	•																			
MOUNTING BRKT - 87313155		•	•			•														
MOUNTING BRKT - 87313156				•			•													
MOUNTING BRKT - 87313157					•			•												
MOUNTING BRKT - 84466100									•											
MOUNTING BRKT - 84420966										•	•									
MOUNTING BRKT - 84420967												•	•	•	•	•				

BACKHOE OPTIONS AND ACCESSORIES

SKID STEER LOADERS/COMPACT TRACK LOADERS

STABILIZER PAD OPTIONS (Must order one as indicated)

	PART NUMBER	WEIGHT LB
Rubber Street Pads for 485 (fold-down) - not required	84150223	10
Flat Pads for 509B, 511B (fold-down)	47670838	20
Standard Dirt Pads for 509B, 511B (fold-down)	86547400	30
Rubber Street Pads for 509B, 511B (fold-down)	86547423	70
Flat Pads for 611B (fold-down)	47670839	55
Standard Dirt Pads for 611B (fold-down)	47670841	46
Rubber Street Pads for 611B (fold-down)	47670842	95
Flip-Over Pads for 509B, 511B, 611B (fold-down)	86547424	100

FACTORY INSTALLED VERTICAL STABILIZER OPTIONS (Order as needed. Must order pads)

	PART NUMBER	WEIGHT LB
Vertical Stabilizers for 509B, 511B	87034086	90
Vertical Stabilizers for 611B	47670844	90
Standard Dirt Pads for all models (vertical)	86590026	32
Rubber Street Pads for all models (vertical)	86590027	70
Flat Pads for all models (vertical)	86590028	32

FACTORY-INSTALLED OPTIONS (Order as Needed)

	PART NUMBER	WEIGHT LB
C&P Bucket Quick Coupler for 509B, 511B, 611B	84150409	63
Rigid Thumb for 485	87487657	70
Rigid Thumb for 509B, 511B, 611B	87034089	150
Hydraulic Thumb for 509B, 511B, 611B	87034090	150
Hammer Hydraulic Kit for 509B, 511B	47687596	27
Hammer Hydraulic Kit for 611B	47687597	27
2-Way Aux. Hydraulic Kit for 509B, 511B for hydraulic thumb, hammer and auger applications)	47670854	60
2-Way Aux. Hydraulic Kit for 611B (for hydraulic thumb, hammer and auger applications)	47670855	60

STANDARD PIN-ON BUCKET OPTIONS FOR 485 BACKHOE (Must order bucket for complete unit)

	PART NUMBER	WEIGHT LB
10" Bucket (.9 ft^3)	86547428	72
12" Bucket (1.2 ft^3)	86547429	76
16" Bucket (1.9 ft^3)	86547430	89
18" Bucket (2.1 ft^3)	86547431	95
24" Bucket (3.1 ft^3)	86547432	115

Backhoe Options & Accessories (Continued next page)

BACKHOE OPTIONS AND ACCESSORIES

SKID STEER LOADERS/COMPACT TRACK LOADERS

STANDARD PIN-ON BUCKET OPTIONS FOR 509B, 511B AND 611B BACKHOES (Must order bucket for compete unit.)

	PART NUMBER	WEIGHT LB
12" Bucket (1.5 ft³)*	84150228	125
16" Bucket (2.2 ft³)*	84150229	148
18" Bucket (2.5 ft³)	84150230	156
20" Bucket (2.9 ft³)	47670859	164
24" Bucket (3.6 ft³)	84150231	180
34" Bucket (5.3 ft³)	84150232	238
36" Bucket (5.7 ft³)*	84150233	246
38" Bucket (6.0 ft³)	84150234	255
Auger Adapter Bracket - Allows New Holland auger drives to pin onto the dipper. Auger operation requires 2-way aux. hydraulic kit.)	87648164	70
Hammer Adapter Bracket - Allows New Holland hammers to pin onto the dipper. Hammer operation requires hammer valve kit or 2-way aux. hydraulic kit.	47670861	52
Hammer Adapter, Pin and Bushing Kit - required for above adapter (ships from Willoughby, OH)	47741688	17

* Thumb contacts bucket teeth, others mesh with teeth

C&P MOUNT BUCKET OPTIONS FOR 509B, 511B AND 611B BACKHOES (Requires C&P bucket quick coupler.)

	PART NUMBER	WEIGHT LB
12" C&P 027 Heavy Duty bucket (2.4 ft³)*	87034110	175
18" C&P 027 Heavy Duty bucket (3.5 ft³)	87034112	210
24" C&P 027 Heavy Duty bucket (4.8 ft³)*	87034115	250
30" C&P 027 Heavy Duty bucket (6.1 ft³)	87034116	275
36" C&P 027 Heavy Duty bucket (7.5 ft³)	87034117	300
30" C&P 027 Ditch Cleaning bucket (6.1 ft³)	87034118	250
36" C&P 027 Ditch Cleaning bucket (7.5 ft³)	87034119	275
C&P 027 Ripper Tooth	87034120	150
C&P 027 Auger adapter (allows New Holland auger to be attached to dipper. Requires auxiliary hydraulic kit)	87034122	115
C&P 027 Hammer Adapter Bracket - Allows New Holland hammers to attach to C&P coupler. Hammer operation requires hammer valve kit or 2-way aux. hydraulic kit.	47687598	109
Hammer Adapter, Pin and Bushing Kit - required for above adapter (ships from Willoughby, OH)	47741688	17

* Thumb contacts bucket teeth, others mesh with teeth

FIELD INSTALLED OPTIONS (Order as Needed)

	PART NUMBER	WEIGHT LB
Mounting bracket for L150 (Loader side only)	87313154	30
Mounting bracket for L160, L170, L175, C175, (loader side only)	87313155	40
Mounting bracket for L180, L185, C185, (loader side only)	87313156	40
Mounting bracket for L190, C190, (loader side only)	87313157	40
Mounting bracket for L213, L215, L216 (loader side only)	84466100	51
Mounting bracket for L218, L220, L221 – see table (loader side only)	84420966	43
Mounting bracket for L221, L223, L250, L230, L234, C227, C232, C234, C237, C238, C245 – see table (loader side only)	84420967	40
Stabilizer Cylinder Guard Kit – 509B, 511B, 611B (fold-down)	47670869	15
C&P Bucket Quick Coupler for 509B, 511B, 611B	84150410	75
Rigid Thumb for 485	87487658	90
Rigid Thumb for 509B, 511B, 611B	87034125	155
Hydraulic Thumb for 509B, 511B, 611B	87034127	150
Hammer Hydraulic Kit for 509B, 511B	47670874	27
Hammer Hydraulic Kit for 611B	47670875	27

Backhoe Options & Accessories (Continued next page)

BACKHOE OPTIONS AND ACCESSORIES

SKID STEER LOADERS/COMPACT TRACK LOADERS

FIELD INSTALLED OPTIONS (Order as Needed) – continued

	PART NUMBER	WEIGHT LB
2-Way Aux. Hydraulic Kit for 509B, 511B (for hydraulic thumb, hammer and auger applications)	47670876	60
2-Way Aux. Hydraulic Kit for 611B (for hydraulic thumb, hammer and auger applications)	47670877	60
Field-installed Vertical Stabilizers for 509B, 511B	87034129	230
Field-installed Vertical Stabilizers for 611B	47670853	230

FEATURES

- 611B – Best-in-class digging force; Best-in-class reach
- All models thumb-ready
- Dual swing cylinders for maximum power
- Cushioned swing with speed control
- Optional thumbs
- Optional aux. hydraulic kits for thumb, hammer and auger operation (509B, 511B, 611B)
- Fold-down or vertical stabilizer options
- Standard pin-on or C&P quick mount buckets (509B, 511B, 611B)

REQUIREMENTS FOR OPERATION

- Standard auxiliary hydraulics

APPLICATIONS

- Light construction, landscaping, golf courses, nurseries, cemeteries
- Dig trenches for footers and utilities

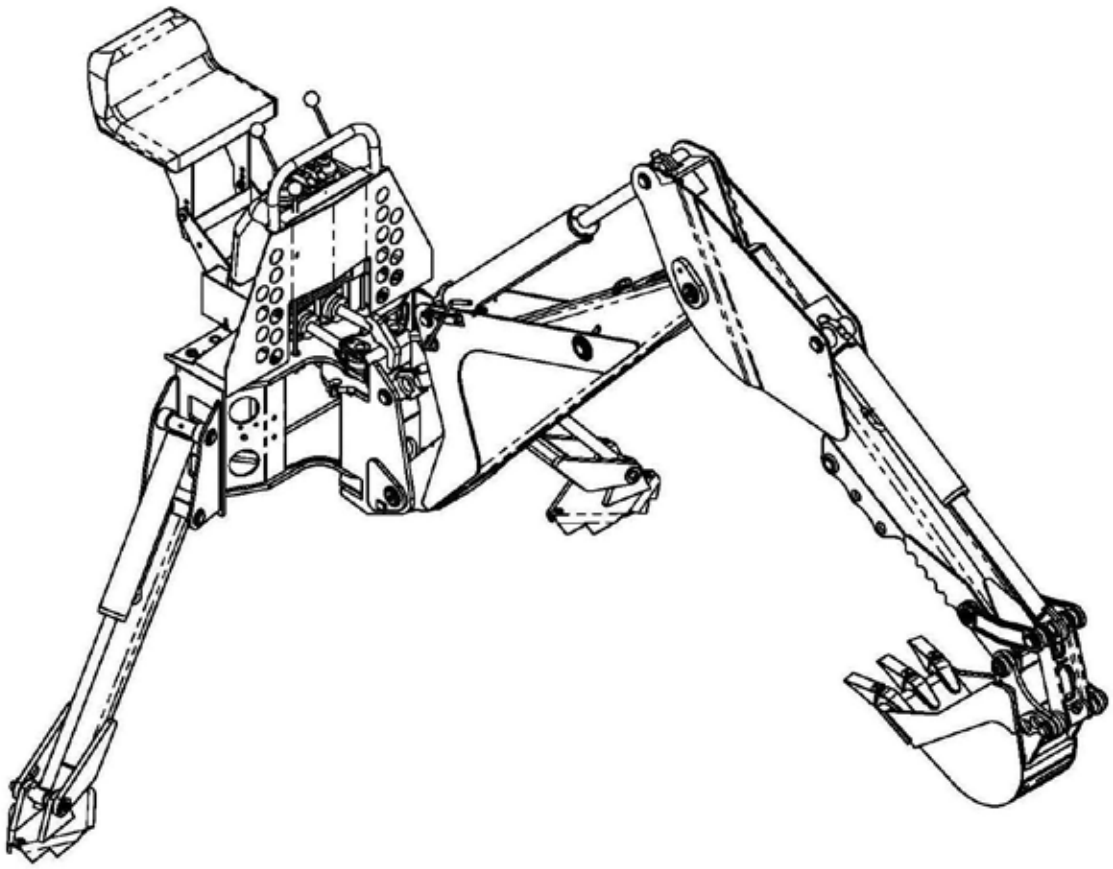

BACKHOE SPECIFICATIONS

SKID STEER LOADERS/COMPACT TRACK LOADERS

BACKHOE MODEL		485	509B	511B	611B
TRANSPORT					
A.	Transport Height (w/boom fully retracted)	6' 9"	7' 9"	8' 10"	8' 10"
	Transport Width (w/fold down stabilizers up)	4' 3"	5' 0"	5' 0"	4' 9"
	Transport Width (w/vertical stabilizers)	N/A	4' 9"	4' 9"	5' 10"
B.	Ground Clearance	10"	11"	11"	11"
C.	Overall Length	6' 11"	7' 7"	7' 9"	7' 9"
	Boom Pivot Height	12"	16"	16"	16"
OPERATIONAL					
D.	Digging Depth Maximum	8' 3"	9' 8"	11' 1"	11' 1"
E.	Digging Depth (2') Flat Bottom	8' 2"	9' 7"	11' 0"	11' 0"
F.	Digging Depth (8') Flat Bottom	4' 4"	8' 3"	9' 11"	9' 11"
G.	Overall Operating Height - Fully Raised	10' 1"	12' 10"	14' 5"	14' 5"
H.	Loading Height	5' 3"	6' 10"	8' 0"	8' 0"
J.	Loading Reach	4' 10"	4' 2"	5' 0"	5' 0"
K.	Reach from Swing Post	10' 7"	12' 9"	14' 5"	14' 5"
L.	Bucket Rotation	180°	180°	180°	180°
	Swing Arc	180°	180°	180°	180°
M.	Straight Wall Dig Depth	4' 8"	7' 3"	8' 2"	8' 2"
	Stabilizer Spread-Operating Pos. (fold down)	7' 6"	7' 11"	7' 11"	9' 11"
	Stabilizer Spread-Operating Pos. (vertical)	N/A	4' 9"	4' 9"	5' 10"
	Stabilizer Down Below Grade (fold down)	10"	16"	16"	17"
	Stabilizer Down Below Grade (vertical)	N/A	11"	11"	12"
	System Relief Valve Setting	2,750 psi	2,500 psi	2,500 psi	2,750 psi
	Digging Force - Bucket Cylinder	3,895 lbs.	5,676 lbs.	5,676 lbs.	6,200 lbs.
	Digging Force - Dipper Cylinder	2,358 lbs.	2,754 lbs.	3,056 lbs.	4,350 lbs.

Some dimensions may vary depending on loader model, tire options, etc.

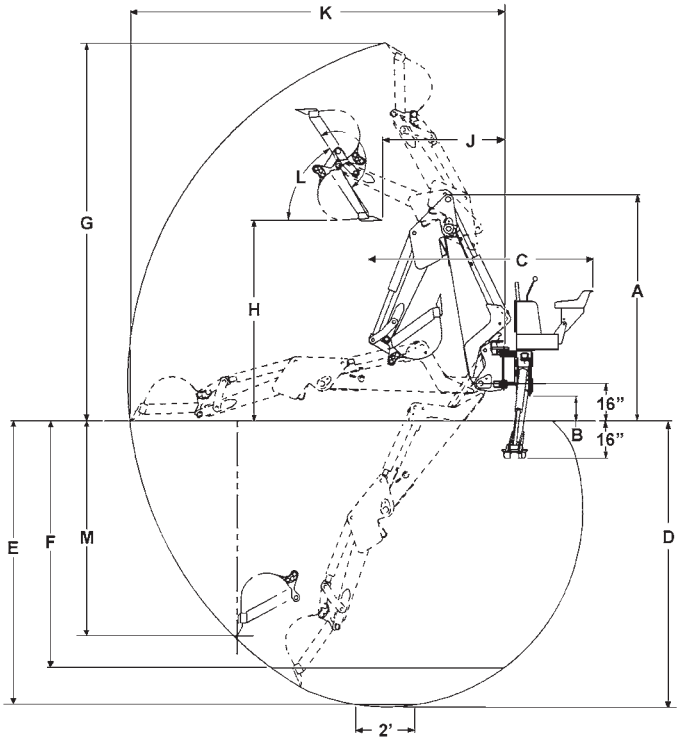

BALE HANDLER

SKID STEER LOADERS/COMPACT TRACK LOADERS

Unit includes mounting bracket, cylinder, hoses and quick couplers.

STANDARD AUXILIARY BOOM HYDRAULICS REQUIRED – REAR COUNTERWEIGHTS RECOMMENDED.	PART NUMBER	WEIGHT LB
BALE HANDLER	87381817	585

MODEL COMPATIBILITY	L213 L215 L216	L218	L220 L221	L223	L225 L228	L230 L234		C227		C232 C234 C237 C238 C245	REQ'D EQUIPMENT					
	L150	L160 L170	L175	L180	L185	L190	C175		C185 C190		STD FLOW	HIGH FLOW	CASE DRAIN	MFH	DEMO DOOR	2ND AUX
BALE HANDLER	•	•	•	•	•	•	•	•	•	•	R					

FEATURES

- Handles bales from 28" to 80"
- Constant pressure eliminates dropped bales
- Hugger arms fabricated with formed round tubing that protects bale wrap
- Lifts, moves, stacks round or rectangular bales

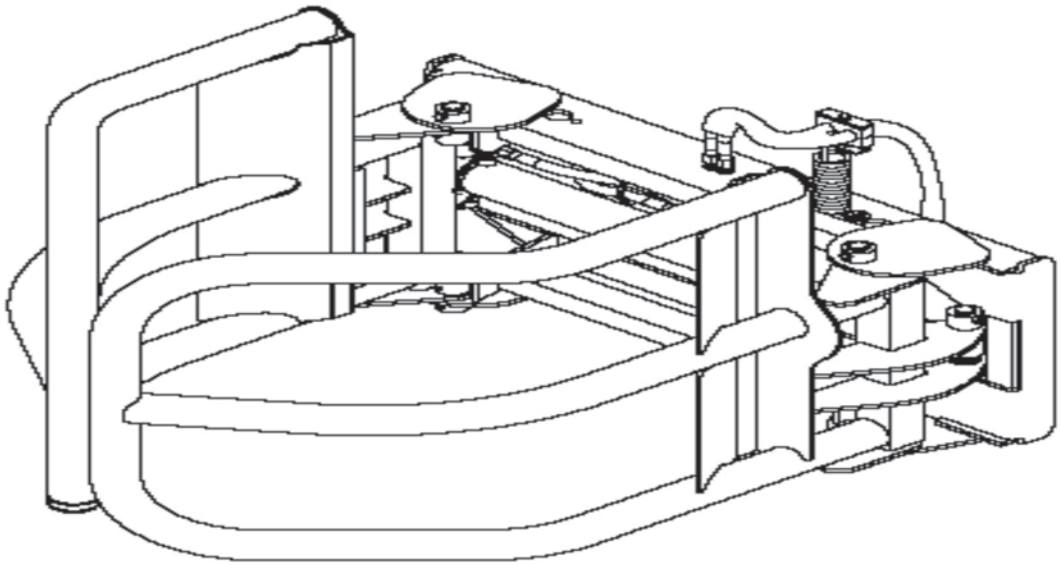

BALE SPEAR

SKID STEER LOADERS/COMPACT TRACK LOADERS

	PART NUMBER	WEIGHT LB
BALE SPEAR, Std Single	87648167	160
BALE SPEAR, HD Single	87473623	195
BALE SPEAR, HD Dual	87473624	235
BALE SPEAR, 3 x 27"	87473625	210
BALE SPEAR, 3 X 44"	87473626	230

MODEL COMPATIBILITY	L213 L215 L216	L218	L220 L221	L223	L225 L228	L230 L234		C227		C232 C234 C237 C238 C245	REQ'D EQUIPMENT					
	L150	L160 L170	L175	L180	L185	L190	C175		C185 C190		STD FLOW	HIGH FLOW	CASE DRAIN	MFH	DEMO DOOR	2ND AUX
BALE SPEAR, Std Single	•	•	•	•	•	•	•	•	•	•						
BALE SPEAR, HD Single	•	•	•	•	•	•	•	•	•	•						
BALE SPEAR, HD Dual	•	•	•	•	•	•	•	•	•	•						
BALE SPEAR, 3 x 27"	•	•	•	•	•	•	•	•	•	•						
BALE SPEAR, 3 X 44"	•	•	•	•	•	•	•	•	•	•						

SINGLE TINE BALE SPEAR

Standard Duty

- For bales up to 2000 lb. at 24" load center
- Main spear – single tapered, forged, 1-1/4" dia x 44"
- Stabilizer spikes – dual 1-1/4" dia x 19"

Heavy Duty

- For bales up to 3000 lb. at 24" load center
- Main spear – single tapered, forged, 2-1/8" dia x 49"
- Stabilizer spikes – dual 1-1/4" dia x 19"

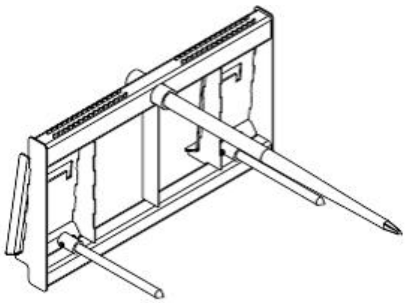

DUAL TINE BALE SPEAR

Heavy Duty

- For bales up to 4000 lb. at 24" load center
- Main spears – dual tapered, forged, 2-1/8" dia x 49"
- Stabilizer spike – single 1-1/4" dia x 19"

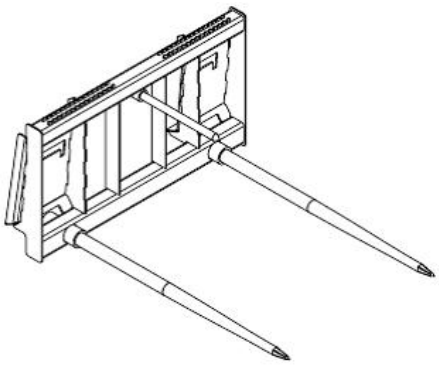

3 TINE BALE SPEAR

- For bales up to 4000 lb. at 24" load center
- Main spikes – 3 tapered, forged, 1-3/4" dia
- Available with 27" or 44" length spears

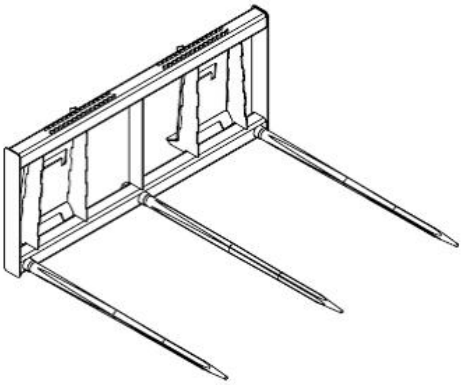

Bale capacity is dependent on loader model

BROOM, ANGLE

SKID STEER LOADERS/COMPACT TRACK LOADERS

PREPACKAGED COMPLETE BROOMS – Units include 14-pin hydraulic angle kit (84215698) installed. Also includes mounting bracket, hoses, quick disconnects and parking stands. Requires Multi-Function control 14-pin boom harness.

	PART NUMBER	WEIGHT LB
72" Angle Broom with hyd angle and poly/wire brush	48159717	1125
84" Angle Broom with hyd angle and poly/wire brush	48159718	1175

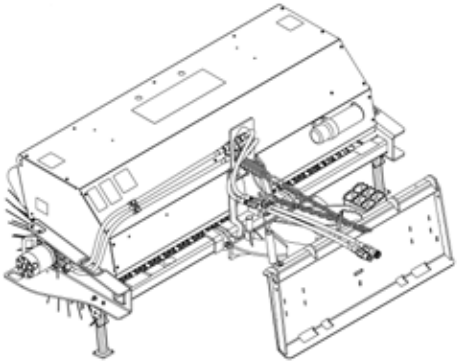

STANDARD BROOMS – Manual angle is standard. Hydraulic angle kits must be ordered separately. Units are shipped with mounting bracket, hoses, quick disconnects and parking stands.

72" ANGLE BROOM with poly/wire combination brush	84215691	1018
84" ANGLE BROOM with poly/wire combination brush	84215692	1098
96" ANGLE BROOM with poly/wire combination brush	84215693	1178
96" ANGLE BROOM DUAL MOTOR with poly/wire combination brush	47358394	1208

OPTIONS (Order as Needed)

Hydraulic Angle Kit (Universal) includes: diverter valve, cylinder, hoses, wiring and switch box mounted in cab.	84215697	20
Hydraulic Angle Kit (14 - Pin) includes: diverter valve, cylinder, hoses, wiring for loaders equipped with 14-pin boom connector.	84215698	20
Hydraulic Angle Kit (2nd Aux) includes cylinder, hoses, and quick disconnects for loaders equipped with 2nd auxiliary function.	84215699	18
Heavy Duty Spring/chain kit (for rough terrain)	48184477	11

40 gallon loader-mounted water kit available separately. See “Water Kit” page for details.

REPLACEMENT BRUSH SETS

Poly/Wire Brush Set for 72" broom	84376838	140
Poly/Wire Brush Set for 84" broom	84376839	164
Poly/Wire Brush Set for 96" broom	84376840	196
All Poly Brush set for 72" broom	51416970	120
All Poly Brush set for 84" broom	51416971	140
All Poly Brush set for 96" broom	51416972	175

MODEL COMPATIBILITY	L213 L215 L216	L218		L220	L221	L223	L225 L228	L230 L234		C227		C232 C234 C237 C238 C245	REQ'D EQUIPMENT					
	L150	L160 L170	L175			L180	L185	L190	C175		C185 C190		STD FLOW	HIGH FLOW	CASE DRAIN	MFH	DEMO DOOR	2ND AUX
72" ANGLE BROOM	•	•	•	•	•				•	•			R			O		
84" ANGLE BROOM		•	•	•	•	•	•	•	•	•	•	•	R			O		
96" ANGLE BROOM				•	•	•	•	•	•	•	•	•	R			O		
96" ANGLE BROOM (DUAL)					•	•	•	•		•	•	•	R			O		

FEATURES

- 50/50 Poly/wire brush core
- Parking stands
- Angles 30º right or left
- 32" brush diameter
- Integral nozzle mounting for water application
- Bolt together hood for simple, less costly replacement, if damaged
- Quick-change brush without breaking hydraulic lines

APPLICATIONS

- Street cleaning & parking lot maintenance, road maintenance
  clean-up, bridge deck clean-up, jobsite clean-up
- Snow removal

REQUIREMENTS FOR OPERATION

- Standard auxiliary hydraulics

BROOM, HOPPER

SKID STEER LOADERS/COMPACT TRACK LOADERS

Unit includes mounting bracket, hoses and quick disconnects.

	PART NUMBER	WEIGHT LB
60" 215 Hopper Broom with poly/wire brush	51469709	1031
72" 215 Hopper Broom with poly/wire brush	51469710	1153
84" 215 Hopper Broom with poly/wire brush	51469713	1275

OPTIONS (Order as Needed)

Single gutter brush kit, fits right or left (all poly)	84188890	90
Dual gutter brush kit (all poly)	48119587	180
Single gutter brush kit, fits right or left (all wire)	84124630	105
Dual gutter brush kit (all wire)	84124631	205
Dust control kit, broom mounted, includes 25 gallon tank, nozzles and hose. (for standard models only)	445999A1	75

Loader-mounted water kits available separately. See "Water Kit" page for details.

REPLACEMENT BRUSH SETS

Poly/wire brush set for 60" broom	84375436	97
Poly/wire brush set for 72" broom	84375437	113
Poly/wire brush set for 84" broom	84375438	134

REPLACEMENT BOLT-ON EDGES

Bolt-on edge for 60" broom	51469729	65
Bolt-on edge for 72" broom	51469730	77
Bolt-on edge for 84" broom	51469731	90

MODEL COMPATIBILITY	L213	L215 L216	L218	L220 L221	L223 L225 L228	L230 L234	C227		C232 C234 C237 C238 C245	REQ'D EQUIPMENT					
		L150	L160 L170 L175		L180 L185	L190	C175	C185 C190		STD FLOW	HIGH FLOW	CASE DRAIN	MFH	DEMO DOOR	2ND AUX
60" 215 HOPPER BROOM	•	•	•	•						R					
72" 215 HOPPER BROOM		•	•	•	•	•	•		•	R					
84" 215 HOPPER BROOM				•	•	•	•	•	•	R					

FEATURES

- Bi-directional motor for forward or reverse sweeping
- High capacity single drive motor for 10-25 gpm systems
- Direct drive brush motor eliminates chains and sprockets
- No caster wheel allows closer proximity to objects and better contact with sweeping surface
- Peripheral rubber skirt keeps debris and dust contained
- Combination poly and wire brush
- Heavy duty front bumper with integral water nozzle mounts
- Replaceable bolt-on bucket edge
- No chains needed for dumping
- 26" brush diameter
- Optional gutter brush mounts on left or right side, or dual brush option
- Hydraulic hoses and flat face hydraulic disconnects included

APPLICATIONS

- Street cleaning & parking lot maintenance, road maintenance clean-up, bridge deck clean-up, jobsite clean-up

REQUIREMENTS FOR OPERATION

- Standard auxiliary hydraulics

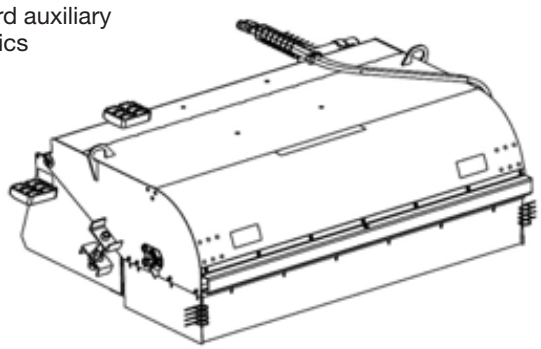

BROOM, PICK-UP STANDARD & VS VACUUM

SKID STEER LOADERS/COMPACT TRACK LOADERS

Unit includes mounting bracket, hoses and quick disconnects.

	PART NUMBER	WEIGHT LB
60" STANDARD PICK-UP BROOM with poly/wire combination brush	87553104	1225
72" STANDARD PICK-UP BROOM with poly/wire combination brush	87553105	1350
84" STANDARD PICK-UP BROOM with poly/wire combination brush	87553106	1475
60" VS VACUUM PICK-UP BROOM with poly/wire combination brush	51422413	1480
72" VS VACUUM PICK-UP BROOM with poly/wire combination brush	51422414	1600
84" VS VACUUM PICK-UP BROOM with poly/wire combination brush	51422415	1725

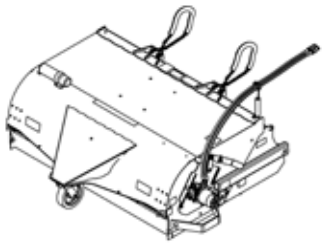

Standard

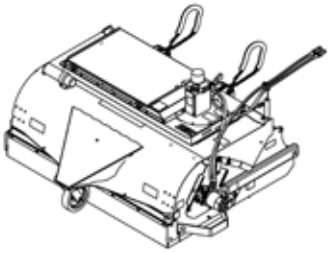

VS Vacuum

ELECTRIC CONTROL (one required for VS units)

Wire Harness Connector – For units with 14-pin Front Elec.	48114556	2
Universal Electric Control kit – For units w/o 14-pin Front Elec.	48114557	2

OPTIONS (Order as Needed)

Single gutter brush kit, fits right or left (all poly)	84188890	90
Dual gutter brush kit (all poly)	48119587	180
Single gutter brush kit, fits right or left (all wire)	84124630	105
Dual gutter brush kit (all wire)	84124631	205
Dust control kit, broom mounted, includes 25 gallon tank, nozzles and hose. (for std models only)	445999A1	75

Loader-mounted water kits available separately. See "Water Kit" page for details.

REPLACEMENT BRUSH SETS

Poly/wire brush set for 60" broom	84375436	97
Poly/wire brush set for 72" broom	84375437	113
Poly/wire brush set for 84" broom	84375438	134

REPLACEMENT BOLT-ON EDGES

Bolt-on edge for 60" broom	51469729	65
Bolt-on edge for 72" broom	51469730	77
Bolt-on edge for 84" broom	51469731	90

MODEL COMPATIBILITY	L213	L215 L216	L218	L220 L221	L223 L225 L228	L230 L234	C227		C232 C234 C237 C238 C245	REQ'D EQUIPMENT					
		L150	L160 L170 L175		L180 L185	L190	C175	C185 C190		STD FLOW	HIGH FLOW	CASE DRAIN	MFH	DEMO DOOR	2ND AUX
60" STD/VS PICK-UP BROOM	•	•	•	•						R			O		
72" STD/VS PICK-UP BROOM		•	•	•	•	•	•		•	R			O		
84" STD/VS PICK-UP BROOM				•	•	•	•	•	•	R			O		

FEATURES – Standard and VS

- Bi-directional motor for forward or reverse sweeping
- High capacity single drive motor for 10-23 gpm systems
- Quick-change brush without breaking hydraulic lines
- Drive motor can be removed for brush change without tools
- No tools required for brush pattern adjustment
- "Volumizing" feature for increased bucket capacity
- Heavy duty caster wheel and wheel mount
- Integral sprinkler nozzle mounts
- Flat face hydraulic quick disconnects included
- Hydraulic hoses and disconnects included
- Optional gutter brush, mounts left, right, or in tandem
- Combination poly and wire brush
- Replaceable bolt-on bucket edge
- Direct drive brush motor eliminates chains and sprockets
- 26" diameter brush

FEATURES – VS only

- Allows dust mitigation without a water tank
- Washable 10 micron coated filter works in dry or wet conditions
- Can help meet OSHA regulations regarding crystalline silica dust in work environment
- 12-volt shaker dislodges loose debris from the filter media directly into the hopper bucket

APPLICATIONS

- Street cleaning & parking lot maintenance, road maintenance clean-up, bridge deck clean-up, jobsite clean-up

REQUIREMENTS FOR OPERATION

- Standard auxiliary hydraulics
- Multi-function electric control option (VS Vacuum only)

BUCKET, 4X1 (UTILITY)

SKID STEER LOADERS/COMPACT TRACK LOADERS

Unit includes hoses and quick disconnects.

REQUIRES STANDARD AUXILIARY BOOM HYDRAULICS	PART NUMBER	WEIGHT LB
4X1 Bucket, Utility, 66" (10.2 ft³ struck/ 14.2 ft³ heaped capacity)	87648131	650
4X1 Bucket, Utility, 72" (11.2 ft³ struck/ 15.6 ft³ heaped capacity)	87648132	685

OPTIONS FOR UTILITY DUTY BUCKETS

Bolt-on spill guard for 66" 4X1 bucket	87648135	28
Bolt-on spill guard for 72" 4X1 bucket	87648136	30

MODEL COMPATIBILITY	L213	L215 L216	L218	L220 L221	L223	L225 L228	L230 L234		C227		C232 C234 C237 C238 C245	REQ'D EQUIPMENT					
		L150	L160 L170	L175	L180	L185	L190	C175		C185 C190		STD FLOW	HIGH FLOW	CASE DRAIN	MFH	DEMO DOOR	2ND AUX
66" 4X1 BUCKET (UTILITY)	•	•	•									R					
72" 4X1 BUCKET (UTILITY)		•	•	•								R					

FEATURES

- Includes hoses and quick disconnects
- 2" cylinder bore; 1-1/8" diameter rod
- Fixed, greasable cylinder ends
- 3/4" x 6" clam cutter bar
- 10 ga. 100K psi bucket construction
- 1/2" x 4" wear strips on bucket floor
- 2,350 lb. clamping force
- 34-5/8" clam opening
- 23-1/8" floor length
- Optional spill guards increase struck capacity approx. 29% and heaped capacity approx. 24%
- Compatible with toothbars and bolt-on edges

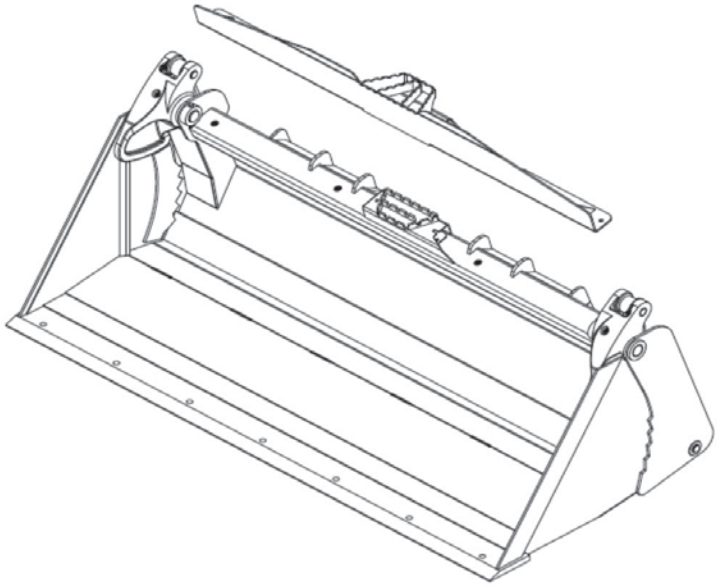

APPLICATIONS

- Functions as a loader bucket, clam, dozer, scraper and bottom dump bucket
- Material spreading – gravel, mulch, dirt, etc.

ACCESSORIES				
Width	Bolt-on Edge	Bolt-on Rezloh™ edge	Toothbar for bucket w/o bolt-on edge	Toothbar for bucket with bolt-on edge
66"	86577167	HCE86577167	9624721H	86599707H
72"	86577169	HCE86577169	9624722H	86599708H

BUCKET, 4X1 (CONSTRUCTION)

SKID STEER LOADERS/COMPACT TRACK LOADERS

Unit includes hoses and quick disconnects.

REQUIRES STANDARD AUXILIARY BOOM HYDRAULICS	PART NUMBER	WEIGHT LB
4X1 Bucket, Construction, 72" (12.5ft³ struck/ 17.8 ft³ heaped)	87648158	930
4X1 Bucket, Construction, 78" (13.6 ft³ struck/19.3 ft³ heaped)	87648159	965
4X1 Bucket, Construction, 84" (14.6 ft³ struck/20.8 ft³ heaped)	87648160	1005

OPTIONS FOR CONSTRUCTION DUTY BUCKETS

Bolt-on spill guard for 72" 4X1 bucket	87648136	30
Bolt-on spill guard for 78" 4X1 bucket	87648165	33
Bolt-on spill guard for 84" 4X1 bucket	87648166	35

MODEL COMPATIBILITY	L213	L215 L216	L218	L220 L221	L223	L225 L228		L230 L234		C227		C232 C234 C237 C238 C245	REQ'D EQUIPMENT					
		L150	L160 L170	L175	L180	L185	L190		C175		C185 C190		STD FLOW	HIGH FLOW	CASE DRAIN	MFH	DEMO DOOR	2ND AUX
72" 4X1 BUCKET (CONSTR)			•	•	•	•		•	•	•			R					
78" 4X1 BUCKET (CONSTR)				•	•	•	•	•	•	•		•	R					
84" 4X1 BUCKET (CONSTR)					•	•	•	•			•	•	R					

FEATURES

- Includes hoses and quick disconnects
- 2-1/2" cylinder bore; 1-1/4" diameter rod
- Spherical, greasable cylinder ends
- 1" x 6" clam cutter bar
- 7 ga, 100K psi bucket construction
- 5/8" x 5" wear strips on bucket floor
- Dual pilot-operated check hydraulic system for positive load holding
- 4,000 lb. clamping force
- 34-3/4" clam opening
- 26-5/8" floor length
- Replaceable bolt-on side cutters
- Optional spill guards increase struck capacity approx. 26% and heaped capacity approx. 21%
- Compatible with toothbars and bolt-on edges

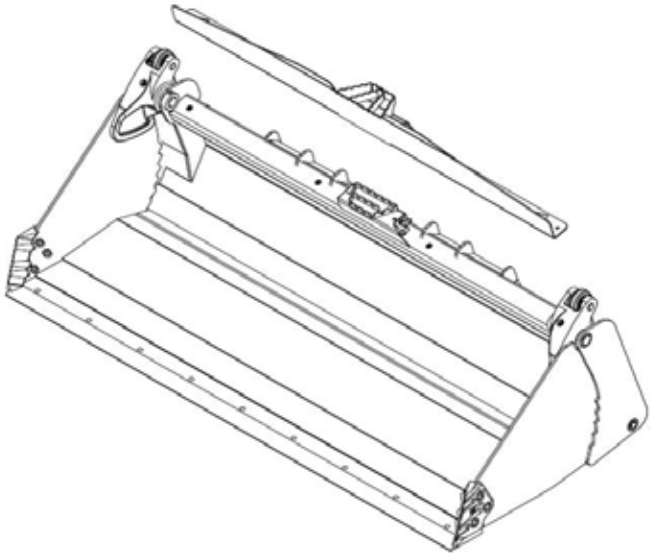

APPLICATIONS

- Functions as a loader bucket, clam, dozer, scraper and bottom dump bucket
- Material spreading – gravel, mulch, dirt, etc.

ACCESSORIES				
Width	Bolt-on Edge	Bolt-on Rezloh™ edge	Toothbar for bucket w/o bolt-on edge	Toothbar for bucket with bolt-on edge
72"	86577169	HCE86577169	87299776	87299779
78"	86577171	HCE86577171	87299777	87299780
84"	86577173	HCE86577173	87299778	87299781

BUCKET, POWER SIDE DISCHARGE

SKID STEER LOADERS/COMPACT TRACK LOADERS

REQUIRES STANDARD AUXILIARY BOOM HYDRAULICS	PART NUMBER	WEIGHT LB
Bucket, Power Side Discharge (Sand), 60"	84195956	805
Bucket, Power Side Discharge (Sand), 72"	84195957	915
Bucket, Power Side Discharge (Sawdust), 72"	84195958	1120
Bucket, Power Side Discharge (Sawdust), 84"	84195959	1300

MODEL COMPATIBILITY	L213	L215 L216	L218	L220 L221	L223	L225 L228	L230 L234		C227		C232 C234 C237 C238 C245	REQ'D EQUIPMENT					
		L150	L160 L170	L175	L180	L185	L190	C175		C185 C190		STD FLOW	HIGH FLOW	CASE DRAIN	MFH	DEMO DOOR	2ND AUX
60" 4x1 POWER SIDE DISCHARGE (SAND)	•	•	•						•			R					
72" 4x1 POWER SIDE DISCHARGE (SAND)		•	•	•	•	•	•	•	•	•	•	R					
72" 4x1 POWER SIDE DISCHARGE (SAWDUST)		•	•	•	•	•	•	•	•	•	•	R					
84" 4x1 POWER SIDE DISCHARGE (SAWDUST)					•	•	•			•	•	R					

FEATURES

- Adjustable discharge gates
- Rubber discharge belt with exposure baffle
- Left or right discharge
- Sawdust model includes agitator to eliminate bridging

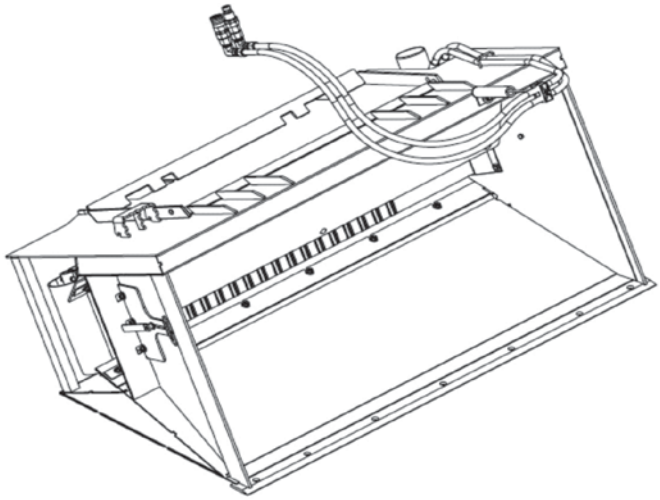

APPLICATIONS

- The power side discharge buckets are designed to collect and discharge sawdust, mulch, and sand into barns, stalls and orchards, or backfill
- Capable of spreading a variety of of materials such as silage, stone, or topsoil
- Road maintenance, agriculture, landscaping, sand bagging

REQUIREMENTS FOR OPERATION

- Standard auxiliary hydraulics
- Bolt-on cutting edge recommended (see below)

	WEIGHT (lbs.)	HEIGHT (in.)	DEPTH (in.)	CAPACITY (yd^3)	Material Performance Rating*					
					Sand	Aggregate	Topsoil	Sawdust	Mulch	Silage
60" (SAND)	869	31.8	39.5	0.55	Best	Good	Good	Poor	Poor	Fair
72" (SAND)	959	31.8	39.5	0.68	Best	Good	Good	Poor	Poor	Fair
72" (SAWDUST)	1,184	45.3	47	1.34	Fair	Fair	Fair	Best	Best	Good
84" (SAWDUST)	1,328	45.3	47	1.58	Fair	Fair	Fair	Best	Best	Good

* Ratings consider the material to be in a typical working condition with respect to moisture content. In most cases, as moisture content increases, performance will be adversely affected.

ACCESSORIES		
Width	Bolt-on Edge	Hardware kit
60"	86577165	86635434
72"	86577169	86635434
84"	86577173	86635435

CHIPPER

SKID STEER LOADERS/COMPACT TRACK LOADERS

AUXILIARY BOOM HYDRAULICS REQUIRED (High Flow as indicated)	PART NUMBER	WEIGHT LB
Model 74500 Standard Flow Chipper	87330079	1145
Model 74800 High Flow Chipper (Requires high flow auxiliary hydraulics)	87330080	1525

MODEL COMPATIBILITY	L213 L215 L216		L218	L220 L221	L223	L225 L228	L230 L234		C227		C232 C234 C237 C238 C245	REQ'D EQUIPMENT					
	L150	L160	L170	L175	L180	L185	L190	C175		C185 C190		STD FLOW	HIGH FLOW	CASE DRAIN	MFH	DEMO DOOR	2ND AUX
CHIPPER - STD. FLOW		•	•	•	•	•	•	•	•	•	•	R		R			
CHIPPER - HIGH FLOW			•	•	•	•	•	•	•	•	•		R	R			

SPECIFICATIONS		
MODEL	74500	74800
Hydraulics	standard-flow, min. 15 gpm	high-flow, min. 25 gpm
Feed Opening Size	5 1/2" x 7"	9" x 9"
Continuous Chipping Size	3"	5"
Feed System	Variable hydraulic	Variable hydraulic
Chipper Disc	20" x 1 1/4" 140 lbs	30" x 1 1/4" 275 lbs
Operating Weight (lbs.)	1,145	1,525

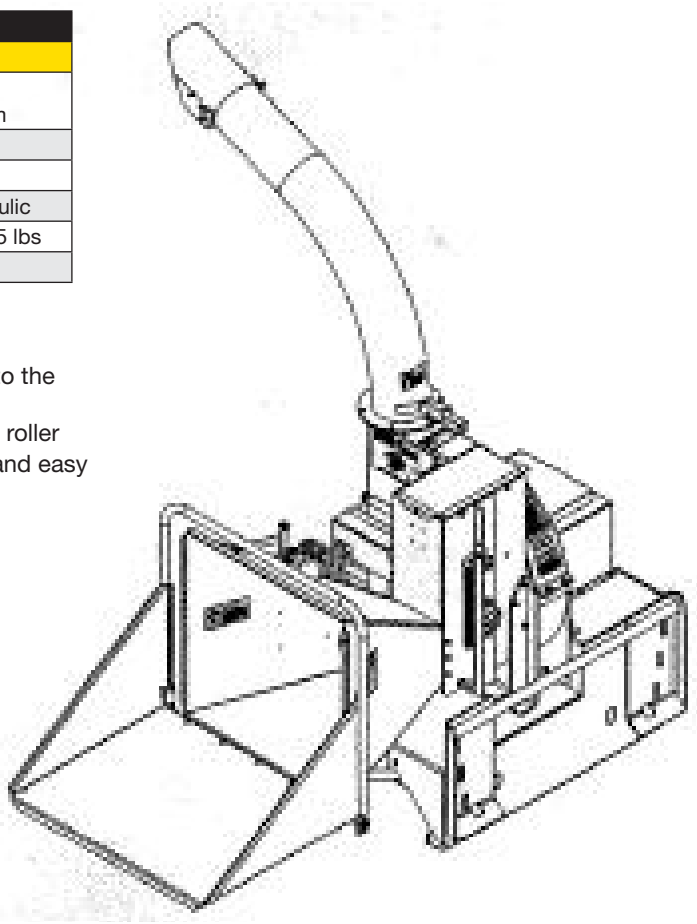

FEATURES

- Chipper has two mounts, so it can be set to feed in front or to the curb side
- Four position manual valve easily controls the hydraulic feed roller
- Built-in hydraulic jack makes feed roller maintenance quick and easy
- Infinitely variable feed roll speed
- Feed roll control lever accessible on both sides of unit

APPLICATIONS

- Chip brush, limbs from tree trimming, land clearing and storm damage clean-up

REQUIREMENTS FOR OPERATION

- Standard flow, min. 15 gpm for Model 74500
- High flow, min. 25 gpm for Model 74800
- Case drain line required for both standard and high flow models

COLD PLANER, HIGH FLOW

SKID STEER LOADERS/COMPACT TRACK LOADERS

For specified skid-steer loaders equipped with optional high flow, auxiliary boom hydraulics.
Includes drum, hydraulic depth, tilt, hydraulic sideshift, hoses, fittings and quick couplers.

	PART NUMBER	WEIGHT LB
Cold Planer HP16* - 16" with hydr controls (26-30 gpm)	84539370	2150
Cold Planer HP18 - 18" with hydr. controls (26-30 gpm)	84539371	2200
Cold Planer HP16* - 16" with hydr controls (31-44 gpm)	84539372	2150
Cold planer HP18 - 18" with hydr. controls (31-44 gpm)	84539373	2200
Cold planer HP24 - 24" with hydr. controls (31-44 gpm)	84539374	2400
Cold planer HP30 - 30" with hydr. controls (31-44 gpm)	84539375	2600
Cold planer HP40 - 40" with hydr. controls (31-44 gpm)	84539376	3100
EHF Cold planer HP24 - 24" with hydr. controls (31-44 gpm)	84523773	2400
EHF Cold planer HP30 - 30" with hydr. controls (31-44 gpm)	84523774	2600
EHF Cold planer HP40 - 40" with hydr. controls (31-44 gpm)	84523775	3100

*16" drum installed in 18" housing.

ADDITIONAL COMPONENTS (Order as Needed)

2.5" Slot Cutting Drum for HP16, HP18, HP24, HP30, HP40	87045459	120
4" Slot Cutting Drum for HP16, HP18, HP24, HP30, HP40	87045460	135
6" Slot Cutting Drum for HP16, HP18, HP24, HP30, HP40	87045461	150
Universal electric control kit for units without MFH (not for EHF planers)	47403651	4
Water nozzle kit, includes 3 spray nozzles, tubing and fitting to reach coupler on loader boom fo SP12 - HP30	87045462	10
Water nozzle kit, includes 3 spray nozzles, tubing and fitting to reach loader boom on HP40	87326406	12

Pressurized Water Kit available. See “Water Kit” page for details

MODEL COMPATIBILITY	L213 L215 L216	L218 L220	L221 L223	L225 L228		L230 L234		C227			C232 C237	C234 C238 C245	REQ’D EQUIPMENT						
	L150 L160	L170 L175		L180 L185	L190		C175		C185	C190			STD FLOW	HIGH FLOW	EHF	CASE DRAIN	MFH	DEMO DOOR	2ND AUX
16" COLD PLANER (26-30)		•					•							R		R	R		
18" COLD PLANER (26-30)		•					•							R		R	R		
16" COLD PLANER (31-44)			•	•	•	•		•	•	•	•	•		R		R	R		
18" COLD PLANER (31-44)			•	•	•	•		•	•	•	•	•		R		R	R		
24" COLD PLANER (31-44)			•	•	•	•		•	•	•	•	•		R		R	R		
30" COLD PLANER (31-44)				•	•	•			•	•	•	•		R		R	R		
40" COLD PLANER (31-44)					•	•				•	•	•		R		R	R		
EHF 24" COLD PLANER (31-44)						•						•	R		R	R	R		
EHF 30" COLD PLANER (31-44)						•						•	R		R	R	R		
EHF 40" COLD PLANER (31-44)						•						•	R		R	R	R		

Cold Planers, High Flow (Continued next page)

COLD PLANER, HIGH FLOW

SKID STEER LOADERS/COMPACT TRACK LOADERS

FEATURES

- Independent pivoting head for better contour tracking
- Removable wheels for planing next to curbs and obstructions
- Hinged cover for pick maintenance access
- Pick maintenance tool included
- Solid steel wheel construction (hardened) with greasable manifold pins and secluded zerks
- Plated and powder-coated surfaces offer resistance to harsh environments
- High rear spoil clearance to prevent recirculation of material
- T1 steel construction in high wear areas
- ± 8° tilt capability
- 0-5" cutting depth, 0-19" sideshift center to right
- Convenient, fully electro-hydraulic, in-cab control for depth, tilt, and sideshift
- Depth and tilt position indicators
- Protective shields for hydraulic and electrical components
- Independent self-leveling depth adjustment shoe allows for precise lapping cuts and taper cuts (i.e. multiple pass and approaches to RR crossings)
- Efficient piston drive motor
- Planetary drive delivers high torque
- Universal, general purpose picks standard

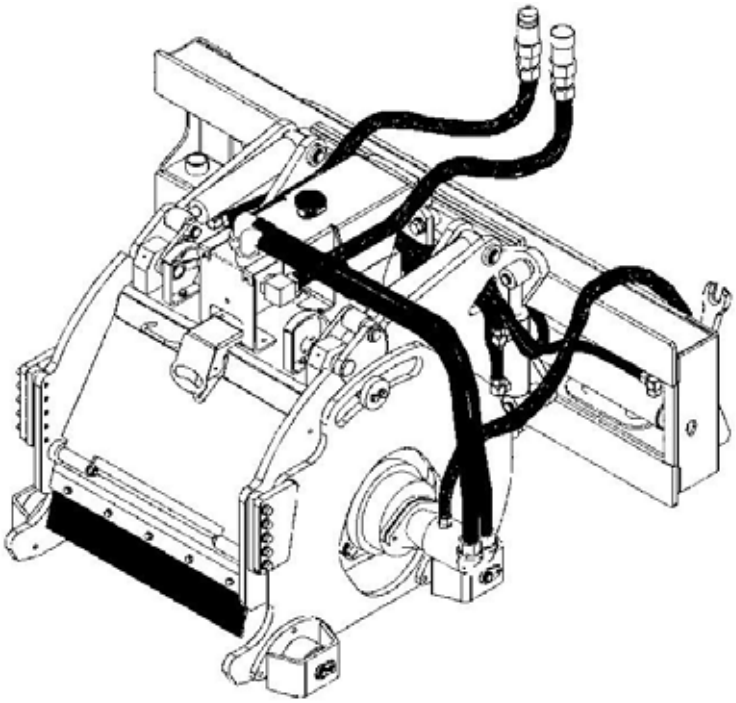

APPLICATIONS

- For heavy duty planing jobs, including milling transition and repair areas, frost heaves and expansion joints

REQUIREMENTS FOR OPERATION

- High flow auxiliary hydraulics (EHF for specified units)
- Multi function control kit or universal electric control kit
- Case drain

COLD PLANER, STANDARD FLOW

SKID STEER LOADERS/COMPACT TRACK LOADERS

For specified skid-steer loaders equipped with standard auxiliary boom hydraulics.
Includes drum, manual depth and tilt, hydraulic side shift, hoses, fittings and quick couplers. Fully hydraulic controls are optional.

STANDARD BOOM HYDRAULICS (12 - 22 gpm)	PART NUMBER	WEIGHT LB
Cold Planer SP12M-12 in. manual controls	87045452	1450
Cold Planer SP12H -12 in. with hydraulic controls *	87045453	1500

ADDITIONAL COMPONENTS (Order as Needed)

2.5" Slot Cutting Drum for SP12	87045458	90
Water nozzle kit, includes 3 spray nozzles, tubing and fitting to reach coupler on loader boom for SP12 - HP30	87045462	10

Pressurized Water Kit available. See “Water Kit” page for details

MODEL COMPATIBILITY		L213 L215 L216	L218	L220 L221	L223	L225 L228	L230 L234		C227		C232 C234 C237 C238 C245	REQ’D EQUIPMENT					
	L150		L160 L170	L175	L180	L185	L190	C175		C185 C190		STD FLOW	HIGH FLOW	CASE DRAIN	MFH	DEMO DOOR	2ND AUX
12" COLD PLANER - MANUAL (12-22)	•	•	•	•	•	•	•	•	•	•	•	R					
12" COLD PLANER - HYD (12-22)			•	•	•	•	•	•	•	•	•	R			R		

FEATURES

- Independent pivoting head for better contour tracking
- Removable wheels for planing next to curbs and obstructions
- Hinged cover for pick maintenance access
- Solid steel wheel construction (hardened) with greasable manifold pins and secluded zerks
- Pick maintenance tool included
- Plated and powder-coated surfaces offer resistance to harsh environments
- High rear spoil clearance to prevent recirculation of material
- T1 steel construction in high wear areas
- Depth and tilt position indicators
- Protective shields for hydraulic and electrical components
- Integral water nozzle ports
- Manual depth and tilt, hydraulic side shift – Standard on SP12M
- Fully electro-hydraulic, in-cab control for depth, tilt and side shift – Optional
- Planetary drive delivers high torque
- 19" drum diameter with 37 general purpose carbide picks on SP12H
- 0-5" cutting depth, 0-19" sideshift center to right
- ± 11° tilt capability
- Universal, general purpose picks standard

APPLICATIONS

- Planing frost heaves, expansion joints, and removing lane markings

REQUIREMENTS FOR OPERATION

- Standard auxiliary hydraulics
- Multi-function Control Kit (SP12H)

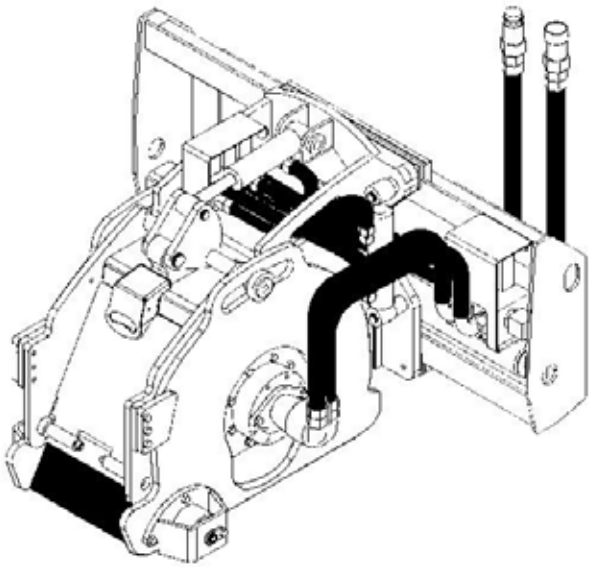

COLD PLANER – SPECIFICATIONS

SKID STEER LOADERS/COMPACT TRACK LOADERS

SPECIFICATIONS						
MODEL	**SP12**	**HP16***	**HP18**	**HP24**	**HP30**	**HP 40**
Operating Weight - lb. (kg)	1400 (635)	2100 (952)	2150 (975)	2350 (1066)	2550 (1157)	3100 (1338)
Cutting Depth - in. (mm)	0-5 (0-127)	0-5 (0-127)	0-5 (0-127)	0-5 (0-127)	0-5 (0-127)	0-5 (0-127)
Cutting Width - in. (mm)	12 (305)	16 (450)	18 (450)	24 (600)	30 (762)	40 (1016)
Drum Diameter - in. (mm)	19 (482)	22 (559)	22 (559)	22 (559)	22 (559)	22 (559)
Tilt	± 11°	± 8°	± 8°	± 8°	± 8°	± 8°
Sideshift - in. (mm)	0-19 (0-483) center to right	3-22 (76-560) center to right	3-22 (76-560) center to right	3-22 (76-560) center to right	3-22 (76-560) center to right	3-22 (76-560) center to right
Hydraulic requirement-gpm (l/m)	12- 22 (45-83)	26-30 or 31-44 (98-115 or 116-166)	26-30 or 31-44 (98-115 or 116-166)	31-44 (116-166)	31-44 (116-166)	31-44 (116-166)
Hydraulic requirement - psi (bar)	2500-3000 (172-206)	2500-3000 (172-206)	2500-3500 (172-241)	2500-3500 (172-241)	2500-3500 (172-241)	2500-3500 (172-241)
EHF Hydraulic requirement -psi (bar)				4000 (275)	4000 (275)	4000 (275)
Wheels/shoes	Both with independent left/right control	Both with independent left/right control	Both with independent left/right control	Both with independent left/right control	Both with independent left/right control	Both with independent left/right control
Drive	Planetary	Planetary	Planetary	Planetary	Planetary	Planetary
Controls	Manual - SP12 Hyd. - SP12H hydraulic optional	Full hydraulic with in-cab controls	Full hydraulic with in-cab controls	Full hydraulic with in-cab controls	Full hydraulic with in-cab controls	Full hydraulic with in-cab controls
No. of Carbide Picks	37	43	45	57	69	89

*16" drum installed in 18" housing.

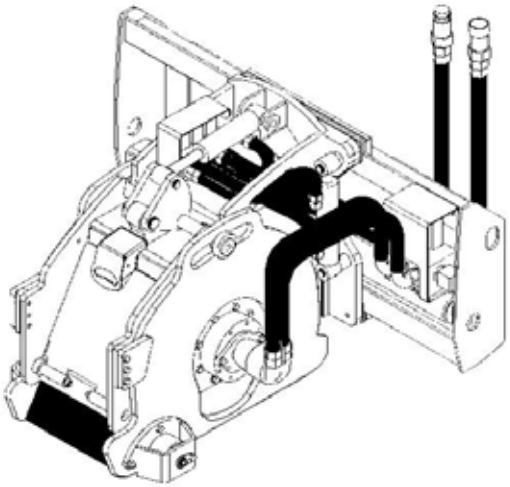

SP12

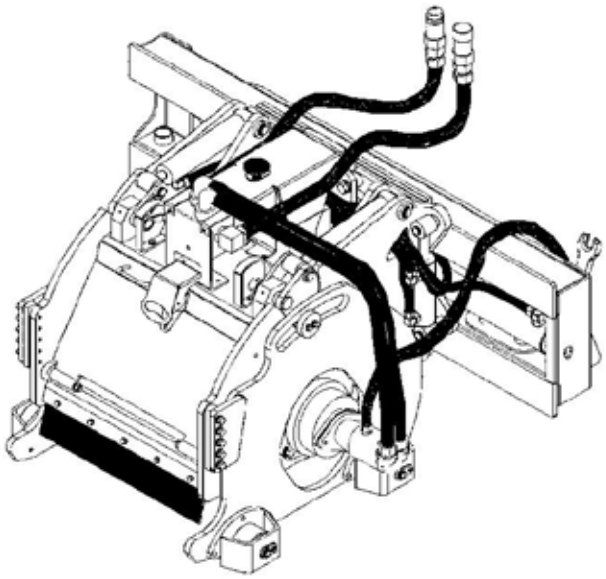

HP24

COLD PLANER, LT SERIES

SKID STEER LOADERS/COMPACT TRACK LOADERS

All planers include hose and quick disconnects.

	PART NUMBER	WEIGHT LB
Standard Flow Cold Planers with manual depth, tilt and hydraulic side shift		
COLD PLANER - 12" Std flow (13-25 gpm)	48035217	1231
COLD PLANER - 16" Std flow (16-25 gpm)	48035218	1321
High Flow Cold Planers with hydraulic depth, tilt and side shift		
COLD PLANER - 16" High Flow (24-45 gpm)	48035219	1606
COLD PLANER - 18" High Flow (26-45 gpm)	48035220	1656
COLD PLANER - 24" High Flow (28-45 gpm)	48035221	1786
COLD PLANER - 30" High Flow (28-45 gpm)	48035222	1951
COLD PLANER - 36" High Flow (31-45 gpm)	48035223	2111

OPTIONAL EQUIPMENT (Must order harness adapter or electric kit for complete unit.)

Electric Harness Adapter - 14 pin round connector - for loaders with Multi-Function control kit.	87023319	1
Universal electric control kit for loaders without Multi-Function control kit	48038648	15

ADDITIONAL COMPONENTS (Order as needed)

Water nozzle kit, includes 4 spray nozzles, tubing and fitting to reach coupler on loader boom	48035330	7

Pressurized Water Kit available. See “Water Kit” page for details.

MODEL COMPATIBILITY	L213 L215 L216	L218 L220 L221	L223 L225 L228	L230 L234	C227	C232 C234 C237 C238 C245	REQ’D EQUIPMENT						
	L150	L160 L170 L175	L180 L185	L190	C175	C185 C190	STD FLOW	HIGH FLOW	EHF	CASE DRAIN	MFH	DEMO DOOR	2ND AUX
COLD PLANER - 12" Std flow (13-25)	•	•	•	•	•	•	R						
COLD PLANER - 16" Std flow (16-25)		•	•	•	•	•	R						
COLD PLANER - 16" High Flow (24-45)		•	•	•	•	•		R		R	O		
COLD PLANER - 18" High Flow (26-45)		•	•	•	•	•		R		R	O		
COLD PLANER - 24" High Flow (28-45)		•	•	•	•	•		R		R	O		
COLD PLANER - 30" High Flow (28-45)			•	•		•		R		R	O		
COLD PLANER - 36" High Flow (31-45)			•	•		•		R		R	O		

FEATURES

- Side shifts 24" left or right to cut next to obstacles
- High flow models feature planetary gearbox drive for increased torque and durability
- Optimized pick pattern provides a faster cut by maximizing the horsepower per pick
- Std asphalt picks included
- Hoses and quick disconnects included

APPLICATIONS

- Make full depth utility cuts
- Mill frost heaves around manholes
- Restore proper drainage to pavement
- Add texture to pavement for skid resistance

REQUIREMENTS FOR OPERATION

- Multi-function control kit or universal electric control kit for high flow units
- Case drain for high flow units

Cold Planers, LT Series (Continued next page)

COLD PLANER, LT SERIES

SKID STEER LOADERS/COMPACT TRACK LOADERS

SPECIFICATIONS							
MODEL	**12" Std flow**	**16" Std flow**	**16" HF**	**18" HF**	**24" HF**	**30" HF**	**36" HF**
Operating Weight – lb. (kg)	1135 (515)	1225 (556)	1510 (685)	1560 (708)	1690 (767)	1855 (841)	2015 (914)
Cutting Depth – in. (mm)	0-5 (0-127)	0-5 (0-127)	0-6 (0-152)	0-6 (0-152)	0-6 (0-152)	0-6 (0-152)	0-6 (0-152)
Cutting Width – in. (mm)	12 (305)	16 (406)	16 (406)	18 (457)	24 (610)	30 (762)	36 (914)
Drum Diameter – in. (mm)	18.6 (472)	18.6 (472)	21.9 (556)	21.9 (556)	21.9 (556)	21.9 (556)	21.9 (556)
Tilt	± 15°	± 15°	± 15°	± 15°	± 15°	± 12.5°	± 10°
Side shift – in. (mm)	24 (610)	24 (610)	24 (610)	24 (610)	24 (610)	24 (610)	24 (610)
Hydraulic req. – gpm (l/m)	13-25 (45-95)	16-25 (60-95)	24-45 (91-170)	26-45 (98-170)	28-45 (106-170)	28-45 (106-170)	31-45 (117-170)
Hydraulic req. – psi (bar)	2200-3400 (152-235)	2200-3400 (152-235)	2200-5000 (152-345)	2200-5000 (152-345)	2200-5000 (152-345)	2200-5000 (152-345)	2200-5000 (152-345)
Drive	Direct	Direct	Planetary	Planetary	Planetary	Planetary	Planetary
Controls	Manual w/ hyd side shift diverter valve	Manual w/ hyd side shift diverter valve	Full hydraulic with in-cab controls	Full hydraulic with in-cab controls	Full hydraulic with in-cab controls	Full hydraulic with in-cab controls	Full hydraulic with in-cab controls
No. of Carbide Picks	36	44	48	52	64	76	88

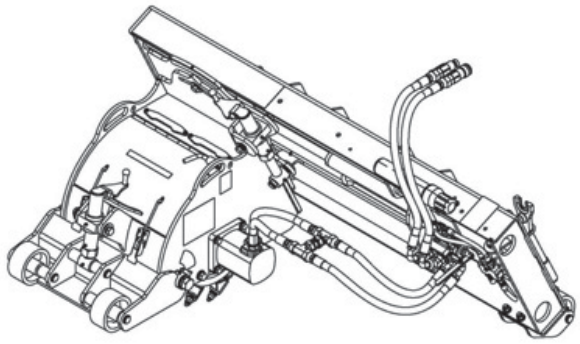

Std Flow

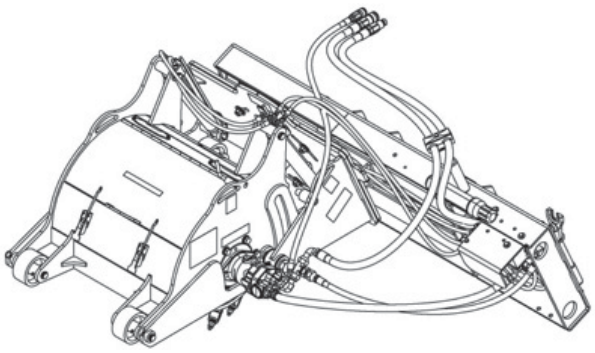

High Flow

CONCRETE BUCKET

SKID STEER LOADERS/COMPACT TRACK LOADERS

Unit includes bucket, mounting bracket, hoses, quick couplers and chute extensions.

STANDARD AUXILIARY BOOM HYDRAULICS REQUIRED	PART NUMBER	WEIGHT LB
C50 CONCRETE BUCKET (1/2 yd cap.)	87027534	492
C75 CONCRETE BUCKET (3/4 yd cap.)	87027535	554

OPTIONAL COMPONENTS – (Order as needed)

90° CHUTE KIT – Allows chute to be positioned for left or right discharge.	48022262	76

MODEL COMPATIBILITY	L213 L215 L216	L218	L220	L221 L223	L225 L228	L230 L234		C227	C232 C234 C237 C238 C245	REQ'D EQUIPMENT					
	L150	L160 L170	L175	L180	L185	L190	C175		C185 C190	STD FLOW	HIGH FLOW	CASE DRAIN	MFH	DEMO DOOR	2ND AUX
C50 CONCRETE BUCKET	•	•	•	•	•	•	•	•	•	R					
C75 CONCRETE BUCKET				•	•	•		•	•	R					

FEATURES

- Dispenses concrete safely and easily into column and wall forms
- Quick, clean and accurate placement of concrete without a wheelbarrow
- Hydraulically actuated gate for precise concrete metering
- Removable chute extension
- Safety door keeps co-workers safe from dispensing gate
- 58" wide. Can be easily picked up and transported in a standard 60" bucket
- Optional 90° chute kit

APPLICATIONS

- Ideal for pools and patios

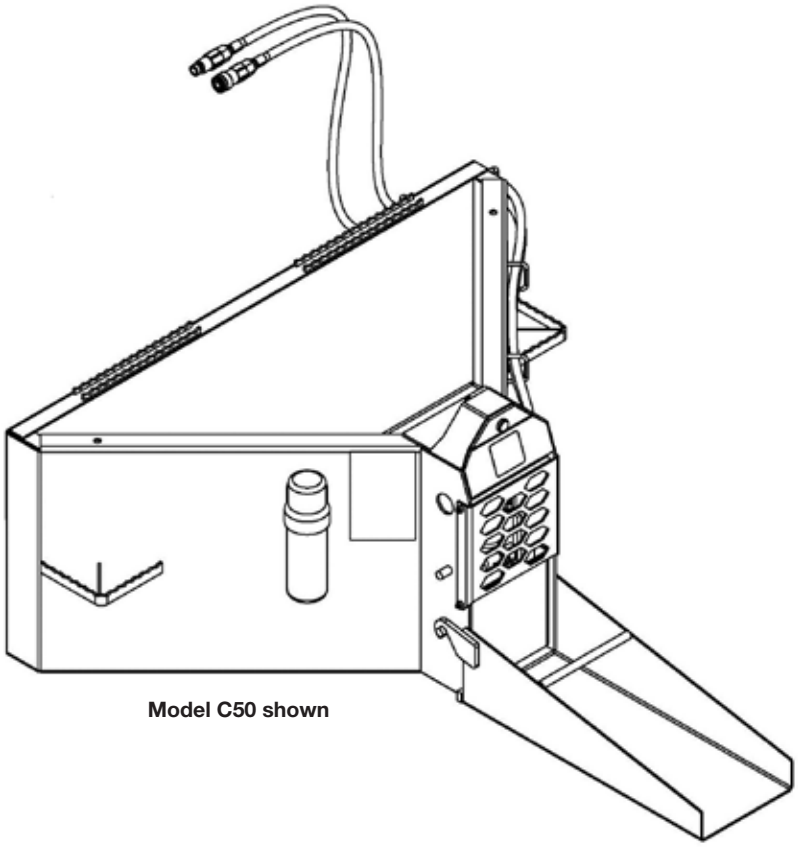

Model C50 shown

CONCRETE CLAW

SKID STEER LOADERS/COMPACT TRACK LOADERS

	PART NUMBER	WEIGHT LB
CONCRETE CLAW	87045466	575

MODEL COMPATIBILITY	L213 L215 L216	L218	L220 L221	L223	L225 L228	L230 L234		C227		C232 C234 C237 C238 C245	REQ'D EQUIPMENT					
	L150	L160 L170	L175	L180	L185	L190	C175		C185 C190		STD FLOW	HIGH FLOW	CASE DRAIN	MFH	DEMO DOOR	2ND AUX
CONCRETE CLAW	•	•	•	•	•	•	•	•	•	•						

FEATURES

- Slide the claw teeth under the concrete, lift & load
- Allows for a cleaner, quicker, and more efficient method of concrete removal
- End plates and tooth shanks are made with high strength T-1 steel
- 1" x 8" wear resistant steel tapered cutting edge
- Features name-brand replaceable points with 1-1/2" wide shanks
- Rubberized flex pins securely fasten replaceable points

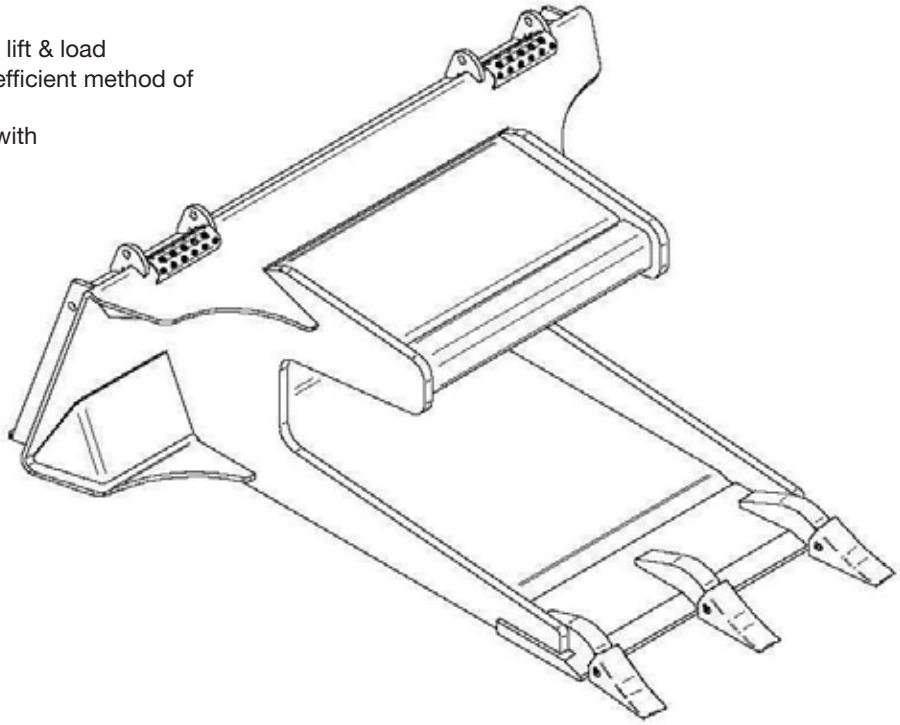

APPLICATIONS

- Excellent attachment for concrete removal on sidewalks, driveways or any construction site

DOZER BLADE

SKID STEER LOADERS/COMPACT TRACK LOADERS

STANDARD AUXILIARY BOOM HYDRAULICS REQUIRED Hydraulic Angle/Hydraulic Tilt with electric priority valve (must select wiring option below)	PART NUMBER	WEIGHT LB
72" PL1300 Dozer Blade	87015253	1360
84" PL1300 Dozer Blade	87015254	1440
96" PL1300 Dozer Blade	87015255	1490

WIRING OPTIONS (Must select one to complete package)

Wiring Kit (Includes: full wiring to cab and battery with cab-mounted switch.)	87015256	3
Wiring adapter kit (for use with loaders equipped with multifunction control kit. Includes adapter to 14-pin boom connector).	86602638	2

MODEL COMPATIBILITY	L213 L215 L216	L218	L220 L221	L223	L225 L228	L230 L234		C227		C232 C234 C237 C238 C245	REQ'D EQUIPMENT					
	L150	L160 L170	L175	L180	L185	L190	C175		C185 C190		STD FLOW	HIGH FLOW	CASE DRAIN	MFH	DEMO DOOR	2ND AUX
72" DOZER BLADE	•	•	•	•	•	•	•	•			R			O		
84" DOZER BLADE		•	•	•	•	•	•	•	•	•	R			O		
96" DOZER BLADE			•	•	•	•			•	•	R			O		

FEATURES

- Rugged, heavy-duty cast moldboard and mounting frame
- Bolt-on reversible cutting edge
- Adjustable skid shoes – standard
- Blade angles 30 degrees left or right
- Blade tilts 10 degrees

APPLICATIONS

- Rough and finish grading as well as light dozing

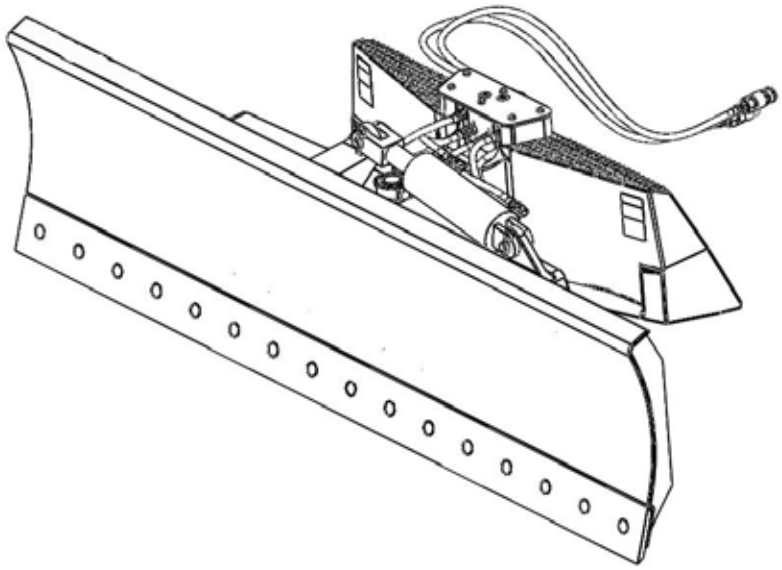

GRADING BOX, LASER

SKID STEER LOADERS/COMPACT TRACK LOADERS

Unit includes laser-ready grading box, mast pole(s), hoses and quick disconnects.

	PART NUMBER	WEIGHT LB
LASER-READY GRADING BOX (Does not include New Holland FleetGRADE laser package)		
72” LASER-READY GRADING BOX, PS-Series, Single Mast	48175181	1685
84” LASER-READY GRADING BOX, PS-Series, Single Mast	48175182	1735
96” LASER-READY GRADING BOX, PS-Series, Single Mast	48175183	1820
72” LASER-READY GRADING BOX, PD-Series, Dual Mast	48175184	2000
84” LASER-READY GRADING BOX, PD-Series, Dual Mast	48175185	2050
96” LASER-READY GRADING BOX, PD-Series, Dual Mast	48175186	2135
LASER-READY GRADING BOX HARNESS/CABLE/BRACKET KIT (Must order one for complete unit)		
KIT, PS SINGLE MAST (harness, cable and bracket)	48175206	9
KIT, PD DUAL MAST (harness, cable and bracket)	48175207	9
NEW HOLLAND FLEETGRADE LASER COMPONENT KITS (Must order control panel kit plus one receiver kit for complete unit)		
KIT, LASER CONTROL PANEL	51436794	2
KIT, LASER RECEIVER, Single Mast	48175208	2
KIT, LASER RECEIVER, Dual Mast	48175209	2
NEW HOLLAND FLEETGRADE LASER BEACONS (Other laser beacon brands may be compatible)		
RUGBY 610 (Horizontal flat plane only)	LG6011150	19
RUGBY 620 (Horizontal, manual grade, no display)	LG6011152	21
RUGBY 640 (Horiz/Vert., manual grade, no display)	LG6011154	19
RUGBY 640G (Horiz/Vert., manual grade, no display)	LG6011486	20
RUGBY CLH wBasic functionality (Horizontal flat plane only)	LG6012274	20
RUGBY CLH w/CLX 200 functionality (Horizontal, manual grade, no display)	LG6012276	21
RUGBY CLH w/CLX 300 functionality (Single grade to 8%, semi auto, w/display)	LG6012277	21
RUGBY CLH w/CLX 400 functionality (Dual grade to 8%, semi auto, w/display)	LG6012278	21
RUGBY CLA w/CLX 500 functionality (Horiz/Vert., manual grade, no display)	LG6012282	24
RUGBY CLA w/CLX 600 functionality (Single grade to 15%, full auto)	LG6012283	24
RUGBY CLA w/CLX 700 functionality (Dual grade to 15%, full auto)	LG6012284	24
RUGBY CLA w/CLX 800 functionality (Dual grade to 15%, full auto, + more)	LG6012280	24
RUGBY CLI w/CLX 900 functionality (Dual grade to 15%, full auto, + more)	LG6012286	19

MODEL COMPATIBILITY	L213 L215 L216	L218 L220 L221	L223 L225 L228	L230 L234	C227	C232 C234 C237 C238 C245	REQ'D EQUIPMENT					
	L150 L160	L170 L175	L180 L185	L190	C175	C185 C190	STD FLOW	HIGH FLOW	CASE DRAIN	MFH	DEMO DOOR	2ND AUX
72" LASER-READY GRADING BOX, PS or PD		•	•		•		R		R	R		
84" LASER-READY GRADING BOX, PS or PD		•	•	•	•	•	R		R	R		
96" LASER-READY GRADING BOX, PS or PD			•	•		•	R		R	R		

Model	Grades	Working Width	Front Capacity	Rear Capacity
PS-72	Depth	72" (1829 mm)	11.5 ft^3 (.33 M^3)	7.0 ft^3 (.20 M^3)
PD-72	Depth and slope			
PS-84	Depth	84" (2134 mm)	13.4 ft^3 (.38 M^3)	8.0 ft^3 (.23 M^3)
PD-84	Depth and slope			
PS-96	Depth	96" (2438 mm)	15.3 ft^3 (.43 M^3)	9.0 ft^3 (.25 M^3)
PD-96	Depth and slope			

Grading Box, Laser (Continued next page)

GRADING BOX, LASER

SKID STEER LOADERS/COMPACT TRACK LOADERS

FEATURES

- Create highly precise finish grades to within 1/10th of an inch
- Push-pull design grades moving forward and in reverse to utilize the maneuverability of a SSL or CTL and increase productivity
- Front wheel location provides stability, resulting in a smoother grading operation and surface
- Hydraulic valve system adjusts grading box, providing operators with smooth and accurate performance in even the toughest environments
- Composite, greaseless bushings in all pivot points
- Reversible and replaceable cutting edge on all sides; main edges are hinged to allow better penetration when digging
- Large mirror allows operator to view spoil and material in front of box
- Foam-filled tires for flat-free operation
- Universal skid steer mount compatible
- Connect-under-pressure flat face quick couplers
- Durable powder coat finish
- Compatible with New Holland FleetGRADE laser control panel, receivers and beacons
- Single or dual mast options (single mast for automated elevation only; dual mast for automated elevation and cross-slope)
- Industry-leading 3-year standard product warranty through CNH Industrial protects the grading box against workmanship and defects not related to wear (1-year standard product warranty through CNH Industrial for hydraulic components)

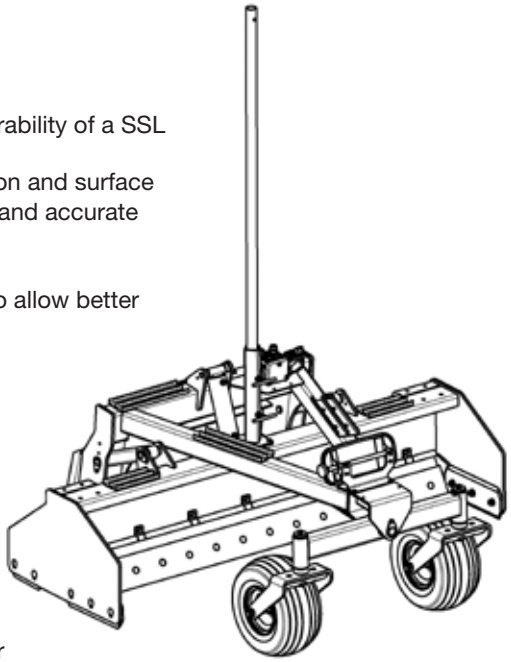

Single Mast (PS)

HOW IT WORKS

- A rotating laser is set for desired grade; the rotating beam of laser light is read by the laser receiver(s) which is mounted to the mast pole
- The beam's location is sent to the control panel which interprets where the beam of light is, in relation to grade
- The control panel then tells the hydraulic valve to adjust the grading box up or down to keep the receiver(s) on grade

APPLICATIONS

- Concrete subgrade
- Athletic fields
- Parking lots, driveways and sidewalks
- Golf course tee boxes and cart paths
- Equestrian riding arenas and rings
- Outdoor tennis and basketball courts
- Other fine grading applications for general excavation, pole barn and storage facility construction

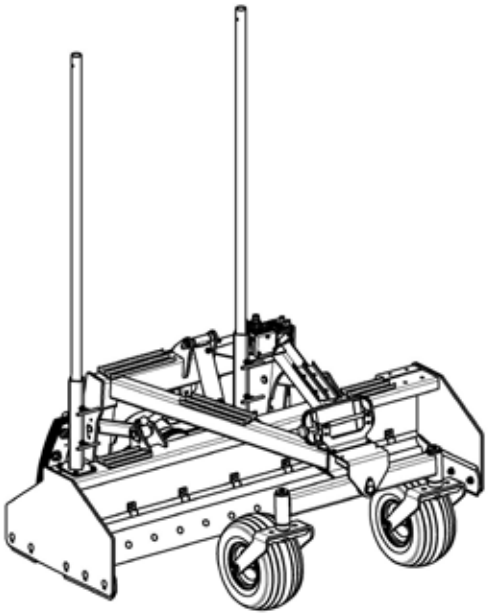

Dual Mast (PD)

REQUIREMENTS FOR OPERATION

- Standard auxiliary hydraulics
- Case drain
- Multi-Function control kit required for laser control package
- Harness/cable/bracket kit for laser-ready grading box
- New Holland FleetGRADE laser control panel kit
- New Holland FleetGRADE laser receiver kit (single or dual mast)
- New Holland FleetGRADE rotating laser beacon (other laser beacon brands may be compatible)

DEALER REQUIREMENTS

- Dealer must be Level 2: 2D On-Machine Systems certified to order New Holland FleetGRADE laser component kits and beacons

GRAPPLE, BRUSH (CONSTRUCTION)

SKID STEER LOADERS/COMPACT TRACK LOADERS

Unit includes hoses and quick disconnects.

	PART NUMBER	WEIGHT LB
72" CONSTRUCTION BRUSH GRAPPLE*	87678203	925
78" CONSTRUCTION BRUSH GRAPPLE*	87678204	999
84" CONSTRUCTION BRUSH GRAPPLE*	87678205	1054
90" CONSTRUCTION BRUSH GRAPPLE*	87678206	1105
72" CONSTRUCTION BRUSH GRAPPLE - LT Series	51422145	885
78" CONSTRUCTION BRUSH GRAPPLE - LT Series	51422146	920
84" CONSTRUCTION BRUSH GRAPPLE - LT Series	51422147	1120

*Compatible with some CWL models

OPTIONAL COMPONENTS (Order as needed)

CYLINDER GUARD KIT - LT Series	51453848	25

MODEL COMPATIBILITY	L213 L215 L216	L218	L220 L221	L223	L225 L228 L230 L234		C227		C232 C234 C237 C238 C245	REQ'D EQUIPMENT					
	L150 L160	L170	L175	L180	L185 L190	C175		C185 C190		STD FLOW	HIGH FLOW	CASE DRAIN	MFH	DEMO DOOR	2ND AUX
72" CONSTRUCTION BRUSH GRAPPLE		•	•	•	•	•	•			R					
78" CONSTRUCTION BRUSH GRAPPLE			•	•	•	•	•		•	R					
84" CONSTRUCTION BRUSH GRAPPLE				•	•	•		•	•	R					
90" CONSTRUCTION BRUSH GRAPPLE				•	•	•		•	•	R					
72" CONSTRUCTION BRUSH GRAPPLE - LT Series		•	•	•	•	•	•			R					
78" CONSTRUCTION BRUSH GRAPPLE - LT Series				•	•	•	•	•	•	R					
84" CONSTRUCTION BRUSH GRAPPLE - LT Series				•	•			•	•	R					

APPLICATIONS

- Open sided design ideal for hauling brush and logs
- Pick up rocks and debris, while leaving dirt behind

Grapple, Brush – Construction (Continued next page)

GRAPPLE, BRUSH (CONSTRUCTION)

SKID STEER LOADERS/COMPACT TRACK LOADERS

	Construction Brush Grapple	Construction Brush Grapple - LT Series
FEATURES		
Overview	• Full featured grapple comes standard with cushioned cylinders and cylinder guards	• LT Series strikes the right balance between durability and affordability
Sizes	• 72", 78", 84" and 90"	• 72", 78" and 84"
Other Features	• 1-1/4" x 24" grapple pins greatly reduce torsional force • 1-1/4" cylinder pivot pins • 1/2" end plates • Standard load check valve for positive clamp force	• Teflon coated bushings provide lubrication at all pivot locations • Each serrated tine is precision cut from one piece of 1/2" Grade 80 steel, from tip to top brace, to add rigidity • Greasable 1-1/4" diameter cylinder pins and 1-9/16" diameter hinge pins
Cylinders	• Two independent cushioned and sleeved cylinders – 2" x 8" x 1-1/4"	• Two independent 2" bore, 8-3/8" hydraulic cylinders feature corrosion, dent and flake resistant NitroSteel® cylinder rods
Cylinder Guards	• Standard	• Optional
Finish	• Durable powder coat	• Durable powder coat
Warranty	• 1-year standard product warranty through Paladin for workmanship and defect not related to wear	• 1-year standard product warranty through CNH Industrial for workmanship and defect not related to wear
Parts Available in CNH Depot	• No	• Yes
REQUIREMENTS FOR OPERATION		
	• Standard auxiliary hydraulics	• Standard auxiliary hydraulics
SPECIFICATIONS		
Unit Includes	• Hoses and quick disconnects	• Hoses and quick disconnects
Material Yield Strength	• 100K PSI	• 80K PSI
Tine Spacing	• 6"	• 5-1/2"
Throat Opening	• Open – 40" / Closed – 16-1/2"	• Open – 36-1/2" / Closed – 21-3/10"
Overall Depth	• 39"	• 39-9/10"
Manufacturer	• Paladin	• Virnig

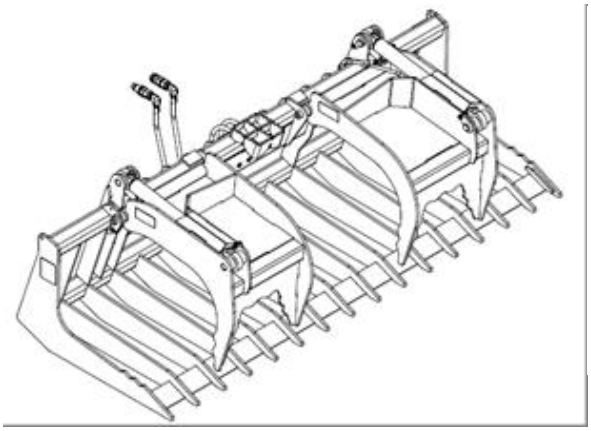

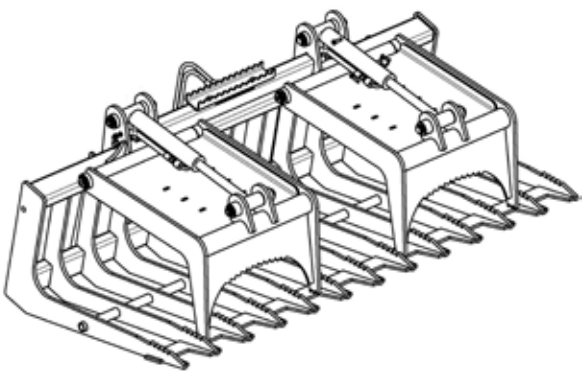

GRAPPLE, BRUSH (UTILITY)

SKID STEER LOADERS/COMPACT TRACK LOADERS

Unit includes hoses and quick disconnects.

	PART NUMBER	WEIGHT LB
66” UTILITY BRUSH GRAPPLE	47443894	810
72” UTILITY BRUSH GRAPPLE	47443895	845
72” UTILITY BRUSH GRAPPLE - LT Series	51422144	800

OPTIONAL COMPONENTS (Order as needed)

CYLINDER GUARD KIT - LT Series	51453848	25

MODEL COMPATIBILITY	L213	L215 L216	L218	L220 L221	L223	L225 L228 L230 L234		C227		C232 C234 C237 C238 C245	REQ’D EQUIPMENT					
		L150	L160 L170	L175	L180	L185 L190	C175		C185 C190		STD FLOW	HIGH FLOW	CASE DRAIN	MFH	DEMO DOOR	2ND AUX
66” UTILITY BRUSH GRAPPLE	•	•	•								R					
72” UTILITY BRUSH GRAPPLE		•	•	•			•				R					
72” UTILITY BRUSH GRAPPLE - LT Series	•	•	•	•	•						R					

APPLICATIONS

- Open sided design ideal for picking up/hauling brush and logs, while leaving dirt behind

GRAPPLE, BRUSH (UTILITY)

SKID STEER LOADERS/COMPACT TRACK LOADERS

	Utility Brush Grapple	Utility Brush Grapple - LT Series
FEATURES		
Overview	• Full featured grapple comes standard with cushioned cylinders and cylinder guards	• LT Series strikes the right balance between durability and affordability
Sizes	• 66" and 72"	• 72"
Other Features	• 1-1/4" x 24" grapple pins greatly reduce torsional force • 1-1/4" cylinder pivot pins • 3/8" end plates • Standard load check valve for positive clamp force	• Teflon coated bushings provide lubrication at all pivot locations • Each serrated tine is precision cut from one piece of 1/2" Grade 50 steel, from tip to top brace, to add rigidity • Greasable 1-1/4" diameter cylinder pins and hinge pins
Cylinders	• Two independent cushioned and sleeved cylinders – 2" x 8" x 1-1/4"	• Two independent 2" bore, 8-3/8" hydraulic cylinders feature corrosion, dent and flake resistant NitroSteel® cylinder rods
Cylinder Guards	• Standard	• Optional
Finish	• Durable powder coat	• Durable powder coat
Warranty	• 1-year standard product warranty through Paladin for workmanship and defect not related to wear	• 1-year standard product warranty through CNH Industrial for workmanship and defect not related to wear
Parts Available in CNH Depot	• No	• Yes
REQUIREMENTS FOR OPERATION		
	• Standard auxiliary hydraulics	• Standard auxiliary hydraulics
SPECIFICATIONS		
Unit Includes	• Hoses and quick disconnects	• Hoses and quick disconnects
Material Yield Strength	• 100K PSI	• 50K PSI
Tine Spacing	• 6"	• 8-1/2"
Throat Opening	• Open – 29" / Closed – 17-3/8"	• Open – 35-1/2" / Closed – 20-3/10"
Overall Depth	• 36"	• 36-9/10"
Manufacturer	• Paladin	• Virnig

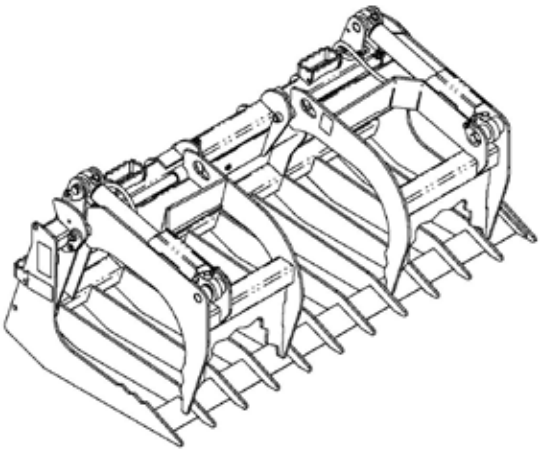

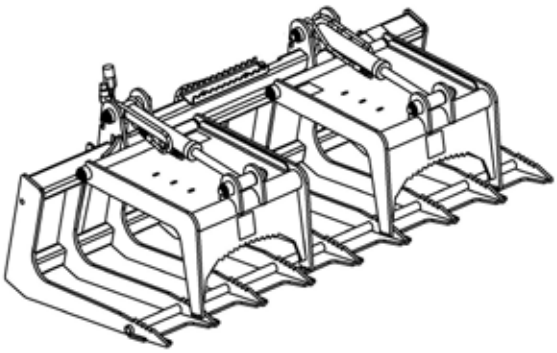

GRAPPLE, FARM

SKID STEER LOADERS/COMPACT TRACK LOADERS

Unit includes hoses and quick disconnects.

	PART NUMBER	WEIGHT LB
Large Capacity Farm Grapple – 72" (1830 mm)	51498693	1165
Large Capacity Farm Grapple – 84" (2130 mm)	51498694	1265
Large Capacity Farm Bucket Grapple – 72" (1830 mm)	51498697	1440
Large Capacity Farm Bucket Grapple – 84" (2130 mm)	51498698	1520

MODEL COMPATIBILITY	L213 L215 L216	L218	L220 L221	L223	L225 L228 L230 L234	C227		C232 C234 C237 C238 C245	REQ'D EQUIPMENT					
	L150	L160 L170	L175	L180	L185 L190	C175	C185 C190		STD FLOW	HIGH FLOW	CASE DRAIN	MFH	DEMO DOOR	2ND AUX
Large Capacity Farm Grapple – 72"					•		•	•	R					
Large Capacity Farm Grapple – 84"					•		•	•	R					
Large Capacity Farm Bucket Grapple – 72"					•		•	•	R					
Large Capacity Farm Bucket Grapple– 84"					•		•	•	R					

FEATURES

- Large Capacity Farm Grapple features an open bottom and back providing excellent visibility while allowing smaller debris to fall through
- Large Capacity Farm Bucket Grapple features five 1/2" x 4" structural wear bars under bucket for added strength
- Two-cylinder grapple with large jaw opening allows handling of big round bales, four 1/2" Grade 80 curved tines (80K PSI yield strength steel) penetrate bales with minimal damage (may be used with twine or net wrapping but should not be used with plastic wrap to prevent tearing)
- Two independent 2" bore, 8-3/8" hydraulic cylinders feature corrosion, dent and flake resistant NitroSteel® cylinder rods
- Greasable hinge pins and cylinder pins
- Teflon coated bushings provide lubrication at all pivot locations
- Durable powder coat finish
- 1-year standard product warranty through CNH Industrial
- Replacement and wear parts supported in our depot network

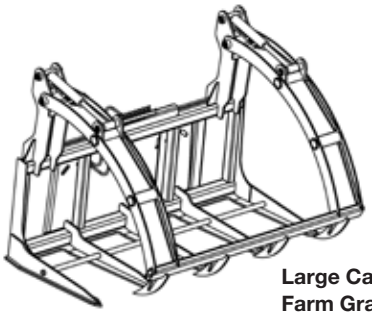

Large Capacity Farm Grapple

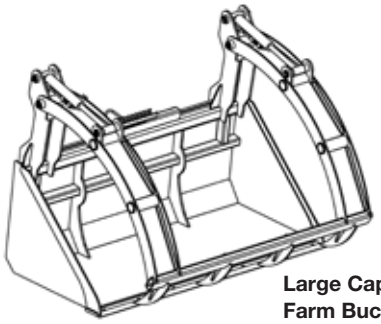

Large Capacity Farm Bucket Grapple

APPLICATIONS

- Effectively handle and transport large, loose round bales
- Move brush and loose materials
- Perform multiple farm chores

REQUIREMENTS FOR OPERATION

- Standard auxiliary hydraulics

ACCESSORIES	
Width	Bolt-on Edge for bucket
72"	86577169
84"	86577173

SPECIFICATIONS				
	Large Capacity Farm Grapple 72"	Large Capacity Farm Grapple 84"	Large Capacity Farm Bucket Grapple 72"	Large Capacity Farm Bucket Grapple 84"
Width	74.0" (1880 mm)	86.0" (2184 mm)	73-1/2" (1867 mm)	85-1/2" (2172 mm)
Depth	40-4/5" (1036 mm)		40.0" (1016 mm)	
Height	30-4/5" (782 mm)		31-2/5" (798 mm)	
Number of tines	5	6	—	—
Grapple jaw opening	73-2/5" (1864 mm)		74-3/10" (1887 mm)	
Number of grapple teeth	4	4	4	4
Bucket capacity (heaped)	—	—	33.2 ft^3 (.94 M^3)	38.8 ft^3 (1.1 M^3)
Operating weight	1050 lbs. (476 kg)	1150 lbs. (522 kg)	1325 lbs. (601 kg)	1405 lbs. (637 kg)

GRAPPLE, LARGE CAPACITY

SKID STEER LOADERS/COMPACT TRACK LOADERS

Unit includes hoses and quick disconnects.

	PART NUMBER	WEIGHT LB
GRAPPLE, LARGE CAPACITY – 72" (1830 mm)	51498734	1665
GRAPPLE, LARGE CAPACITY – 84" (2130 mm)	51498735	1765

MODEL COMPATIBILITY	L213 L215 L216	L218	L220 L221	L223	L225 L228 L230 L234	C227		C232 C234 C237 C238 C245	REQ'D EQUIPMENT					
	L150	L160 L170	L175	L180	L185 L190	C175	C185 C190		STD FLOW	HIGH FLOW	CASE DRAIN	MFH	DEMO DOOR	2ND AUX
GRAPPLE, LARGE CAPACITY – 72"					•		•	•	R					
GRAPPLE, LARGE CAPACITY – 84"					•		•	•	R					

FEATURES

- Fully utilizes the increased capacity of large New Holland machines to get jobs done faster
- Open bottom and back providing excellent visibility while allowing smaller debris to fall through
- Heavy-duty 1/2" Grade 80 steel tines and 1/2" Grade 50 steel outer jaw tines
- Fully gusseted tine tips for added strength
- Two independent 2-1/2" bore, 8-3/8" hydraulic cylinders feature corrosion, dent and flake resistant NitroSteel® cylinder rods
- Teflon® coated bushings provide lubrication at all pivot locations
- Comes standard with cylinder guards
- Greasable 1-9/16" diameter hinge pins and 1-1/4" cylinder pins
- Durable powder coat finish
- 1-year standard product warranty through CNH Industrial
- Replacement and wear parts supported in our depot network

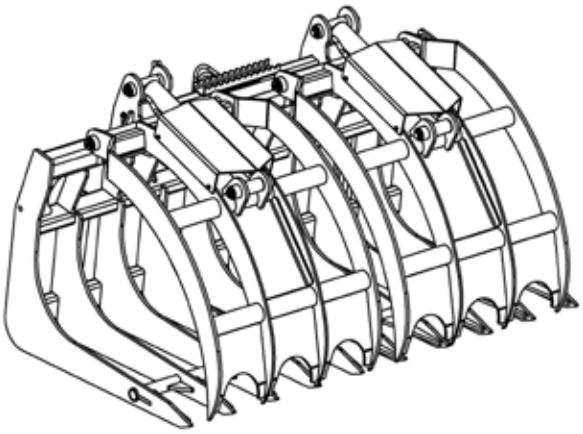

APPLICATIONS

- Works well for bulky material where smaller debris can fall through the grapple bottom
- Independent grapple opens over 5 feet for large jobs and grabbing odd-shaped materials with ease
- Perfect for clearing tree lines and wooded lots after felling

SPECIFICATIONS		
	72"	84"
Width	73.0" (1854 mm)	85.0" (2159 mm)
Depth	46.0" (1168 mm)	
Height	33-4/5" (859 mm)	
Number of tines	10	12
Grapple jaw opening	62-4/5" (1595 mm)	
Operating weight	1550 lbs. (703 kg)	1650 lbs. (748 kg)

GRAPPLE, LOG

SKID STEER LOADERS/COMPACT TRACK LOADERS

STANDARD AUXILIARY BOOM HYDRAULICS REQUIRED	PART NUMBER	WEIGHT LB
LOG GRAPPLE	9863582	650

MODEL COMPATIBILITY	L213 L215 L216	L218	L220 L221	L223	L225 L228	L230 L234		C227		C232 C234 C237 C238 C245	REQ'D EQUIPMENT					
	L150	L160 L170	L175	L180	L185	L190	C175		C185 C190		STD FLOW	HIGH FLOW	CASE DRAIN	MFH	DEMO DOOR	2ND AUX
LOG GRAPPLE	•	•	•	•	•	•	•	•	•	•	R					

FEATURES

- Excellent attachment for handling logs, piles, brush, and other bulky materials
- 2" x 8" hydraulic cylinders
- Closes to 6" log or pipe
- 43-1/8" open height
- 29-1/2" fork length

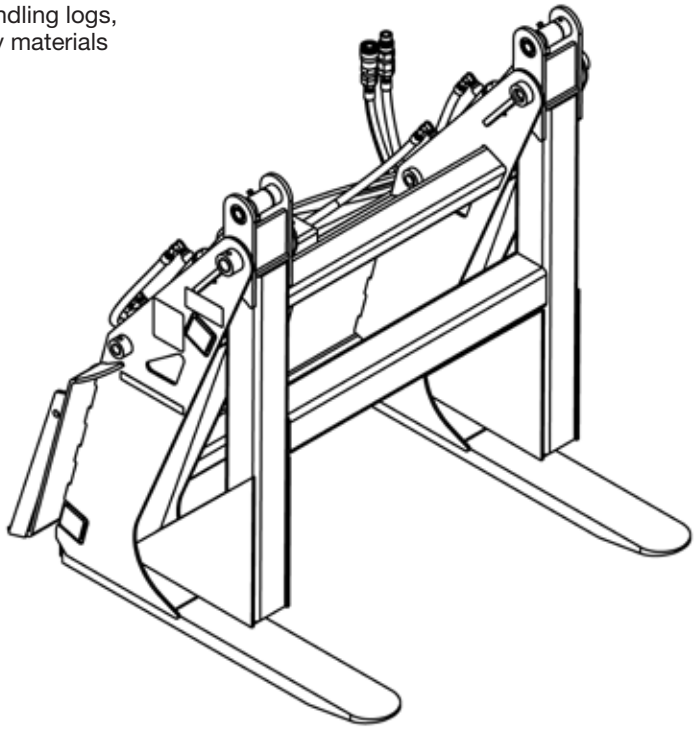

GRAPPLE, SCRAP (CONSTRUCTION)

SKID STEER LOADERS/COMPACT TRACK LOADERS

Unit includes hoses and quick disconnects.

	PART NUMBER	WEIGHT LB
76" CONSTRUCTION SCRAP GRAPPLE*	87677285	1081
82" CONSTRUCTION SCRAP GRAPPLE*	87677286	1133
88" CONSTRUCTION SCRAP GRAPPLE*	87677287	1180
78" CONSTRUCTION SCRAP GRAPPLE - LT Series	51422143	1120

*Compatible with some CWL models

OPTIONAL COMPONENTS (Order as needed)

CYLINDER GUARD KIT - LT Series	51453848	25

MODEL COMPATIBILITY	L213 L215 L216	L218	L220 L221	L223	L225 L228	L230 L234		C227		C232 C234 C237 C238 C245	REQ'D EQUIPMENT					
	L150	L160 L170	L175		L180 L185	L190	C175		C185 C190		STD FLOW	HIGH FLOW	CASE DRAIN	MFH	DEMO DOOR	2ND AUX
76" CONSTRUCTION SCRAP GRAPPLE			•	•	•	•	•	•		•	R					
82" CONSTRUCTION SCRAP GRAPPLE					•	•	•			•	R					
88" CONSTRUCTION SCRAP GRAPPLE					•	•			•	•	R					
78" CONSTRUCTION SCRAP GRAPPLE - LT Series					•	•				•	R					

ACCESSORIES	
Width	Bolt-on Edge
76"	86577171
82"	86577173
88"	85999108

APPLICATIONS

- Grab and secure large, bulky scrap and waste material

Grapple, Scrap - Construction (Continued next page)

GRAPPLE, SCRAP (CONSTRUCTION)

SKID STEER LOADERS/COMPACT TRACK LOADERS

	Construction Scrap Grapple	Construction Scrap Grapple - LT Series
FEATURES		
Overview	• Full featured grapple comes standard with cushioned cylinders and cylinder guards	• LT Series strikes the right balance between durability and affordability
Sizes	• 76", 82" and 88"	• 78"
Other Features	• 1-1/4" x 24" grapple pins greatly reduce torsional force • 1-1/4" cylinder pivot pins • 1/2" end plates • Standard load check valve for positive clamp force	• Solid bottom constructed from 1/4" Grade 50 steel • Four 1/2" thick vertical braces and a welded brace plate inside the bucket for added strength • Teflon coated bushings provide lubrication at all pivot locations • Greasable 1-1/4" diameter cylinder pins and 1-9/16" diameter hinge pins
Cylinders	• Two independent cushioned cylinders – 2" x 8" x 1-1/4"	• Two independent 2" bore, 8-3/8" hydraulic cylinders feature corrosion, dent and flake resistant NitroSteel® cylinder rods
Cylinder Guards	• Standard	• Optional
Bolt-On Edge	• Bucket edge drilled for replaceable edge	• 3/4" x 6" weld-on cutting edge with holes to accept 78" bolt-on edge
Finish	• Durable powder coat	• Durable powder coat
Warranty	• 1-year standard product warranty through Paladin for workmanship and defect not related to wear	• 1-year standard product warranty through CNH Industrial for workmanship and defect not related to wear
Parts Available in CNH Depot	• No	• Yes
REQUIREMENTS FOR OPERATION		
	• Standard auxiliary hydraulics	• Standard auxiliary hydraulics
SPECIFICATIONS		
Unit Includes	• Hoses and quick disconnects	• Hoses and quick disconnects
Throat Opening	• Open – 40" / Closed – 20"	• Open – 38-4/5" / Closed – 22-1/2"
Overall Depth	• 38"	• 37"
Manufacturer	• Paladin	• Virnig

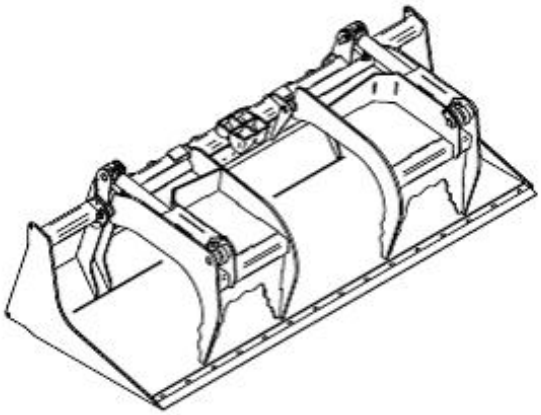

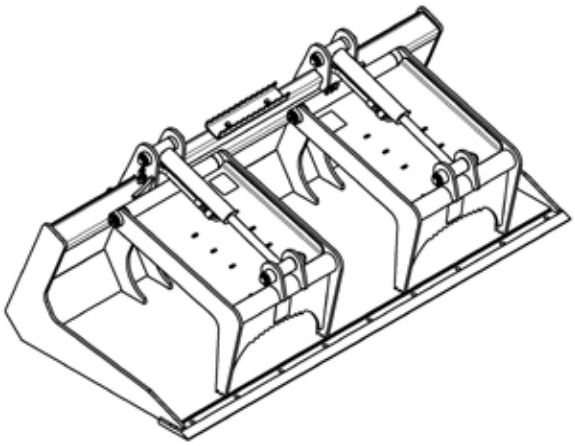

GRAPPLE, SCRAP (UTILITY)

SKID STEER LOADERS/COMPACT TRACK LOADERS

Unit includes hoses and quick disconnects.

	PART NUMBER	WEIGHT LB
60" UTILITY SCRAP GRAPPLE	47443885	808
66" UTILITY SCRAP GRAPPLE	47443886	858
72" UTILITY SCRAP GRAPPLE	47443887	905

MODEL COMPATIBILITY	L213 L215 L216	L218	L220 L221	L223	L225 L228	L230 L234		C227		C232 C234 C237 C238 C245	REQ'D EQUIPMENT					
	L150	L160 L170	L175	L180	L185	L190	C175		C185 C190		STD FLOW	HIGH FLOW	CASE DRAIN	MFH	DEMO DOOR	2ND AUX
60" UTILITY SCRAP GRAPPLE	•										R					
66" UTILITY SCRAP GRAPPLE	•	•	•								R					
72" UTILITY SCRAP GRAPPLE		•	•				•				R					

FEATURES

- Includes hoses and quick disconnects
- Dual independent grapples
- Standard cylinder guards protect all cylinder components
- Standard load check valve for positive clamp force
- 1-1/4" cylinder pivot pins
- 1-1/4" x 24" grapple pins reduce torsional force
- 3/8" end plates
- Cushioned cylinders – 2" x 8" x 1-1/4"
- Bucket edge drilled for replaceable edge
- Throat opening grapple open – 34"
- Throat opening grapple closed – 19-3/4"
- Overall Depth – 36"

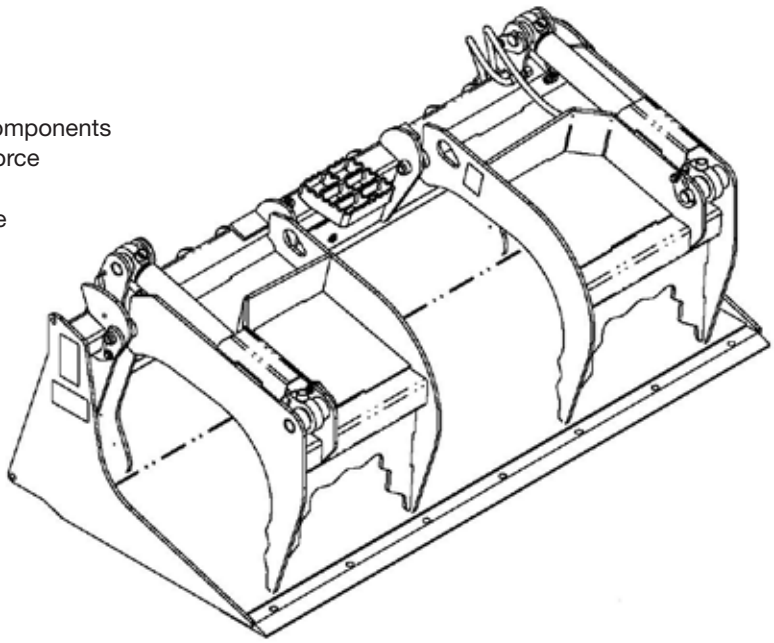

ACCESSORIES	
Width	Bolt-on Edge
60"	86577165
66"	86577167
72"	86577169

HARLEY POWER BOX RAKE®

SKID STEER LOADERS/COMPACT TRACK LOADERS

Unit includes rake head, angling mounting frame, quick disconnects and hoses.

STANDARD AUXILIARY BOOM HYDRAULICS REQUIRED	PART NUMBER	WEIGHT LB
POWER BOX RAKE, 72" MANUAL ANGLE	84160170	1150
POWER BOX RAKE, 72" HYDR ANGLE	84160171	1175
POWER BOX RAKE, 84" MANUAL ANGLE	84160172	1350
POWER BOX RAKE, 84" HYDR ANGLE	84160173	1400
POWER BOX RAKE, 90" MANUAL ANGLE	84160174	1620
POWER BOX RAKE, 90" HYDR ANGLE	84160175	1670

ADDITIONAL COMPONENTS (Must order Electric Control Kit for hyd. angle units)

Electric Control Kit for loaders not equipped with factory multi-function handle kit	84372934	5
Electric Control Kit for loaders equipped with new style multi-function handle kit w/14 pin round connector	87023319	2

MODEL COMPATIBILITY	L213 L215 L216		L218	L220 L221	L223	L225 L228	L230 L234		C227		C232 C234 C237 C238 C245	REQ'D EQUIPMENT					
	L150	L160	L170	L175	L180	L185	L190	C175		C185 C190		STD FLOW	HIGH FLOW	CASE DRAIN	MFH	DEMO DOOR	2ND AUX
POWER BOX RAKE, 72" (MAN)	•	•	•	•	•			•	•			R					
POWER BOX RAKE, 72" (HYD)	•	•	•	•	•			•	•			R			O		
POWER BOX RAKE, 84" (MAN)			•	•	•	•	•	•	•		•	R					
POWER BOX RAKE, 84" (HYD)			•	•	•	•	•	•	•		•	R			O		
POWER BOX RAKE, 90" (MAN)					•	•	•	•	•	•	•	R					
POWER BOX RAKE, 90" (HYD)					•	•	•	•	•	•	•	R			O		

FEATURES

- Powered by standard skid steer auxiliary hydraulics
- Hydraulic motor drive
- Operates in forward and reverse
- Reversible end plates
- Adjustable dual gauge wheels
- Carbide tipped teeth
- Flat face hydraulic quick disconnects included
- Hoses included

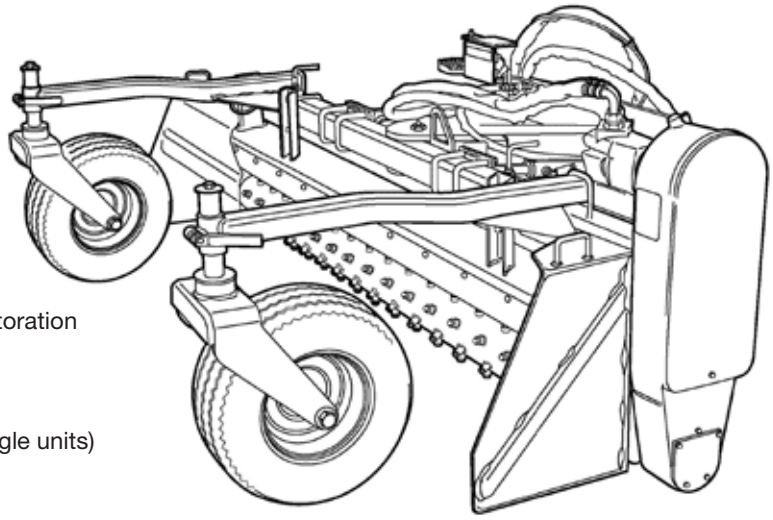

APPLICATIONS

- Ideal for seedbed preparation, landscaping, trench restoration

REQUIREMENTS FOR OPERATION

- Standard auxiliary hydraulics, 11 to 20 GPM
- Auxiliary Multi-function control kit (Optional for hyd. angle units)

HYDRAULIC HAMMER

SKID STEER LOADERS/COMPACT TRACK LOADERS

Unit includes hammer body, side plates, SSL mounting bracket, hoses, quick disconnects and moil point.

	PART NUMBER	WEIGHT LB
HH-2M HYDRAULIC HAMMER with single position mounting bracket	47450982	679
HH-2M HYDRAULIC HAMMER with 3 position mounting bracket	47450985	699
HH-3M HYDRAULIC HAMMER with single position mounting bracket	47450986	794
HH-3M HYDRAULIC HAMMER with 3 position mounting bracket	47450987	814
HH-4M HYDRAULIC HAMMER with single position mounting bracket	47450988	911
HH-4M HYDRAULIC HAMMER with 3 position mounting bracket	47450989	931
HH-5M HYDRAULIC HAMMER with single position mounting bracket	47450990	1128

ADDITIONAL COMPONENTS (Optional)

Auto Lube Kit - fits HH-2M to HH-5M	47766709	9

ADDITIONAL COMPONENTS for HH-2M (Order as needed)

Moil Point (1 included with base hammer)	47451007	15
Chisel Point	47451008	17
Blunt Point	47451009	17
Frost Wedge (2.0" wide)	47451010	22
Asphalt Cutter (6" wide)	47451011	36
Tamping pad (8" X 8")	47451012	43

ADDITIONAL COMPONENTS for HH-3M (Order as needed)

Moil Point (1 included with base hammer)	47451018	26
Chisel Point	47451019	26
Blunt Point	47451021	28
Frost Wedge (2.3" wide)	47451022	39
Asphalt Cutter (6" wide)	47451023	36
Tamping pad (12" X 12")	47451024	119

ADDITIONAL COMPONENTS for HH-4M (Order as needed)

Moil Point (1 included with base hammer)	47451026	33
Chisel Point	47451027	33
Blunt Point	47451028	36
Frost Wedge (2.5" wide)	47451029	42
Asphalt Cutter (6" wide)	47451030	42
Tamping pad (12" X 12")	47451031	126

ADDITIONAL COMPONENTS for HH-5M (Order as needed)

Moil Point (1 included with base hammer)	47451037	48
Chisel Point	47451039	53
Blunt Point	47451040	51
Asphalt Cutter (6" wide)	47451041	71
Tamping pad (12" X 12")	47451042	130

Hydraulic Hammers (Continued next page)

HYDRAULIC HAMMER

SKID STEER LOADERS/COMPACT TRACK LOADERS

MODEL COMPATIBILITY	L213	L215 L216		L218 L220 L221	L223	L225 L228	L230 L234		C227		C232 C234 C237 C238 C245	REQ'D EQUIPMENT					
		L150	L160	L170 L175	L180	L185	L190	C175		C185 C190		STD FLOW	HIGH FLOW	CASE DRAIN	MFH	DEMO DOOR	2ND AUX
HH-2M HYDRAULIC HAMMER	•	•	•	•								R				R	
HH-3M HYDRAULIC HAMMER		•	•	•	•	•	•	•	•	•	•	R				R	
HH-4M HYDRAULIC HAMMER			•	•	•	•	•	•	•	•	•	R				R	
HH-5M HYDRAULIC HAMMER					•	•	•			•	•	R				R	

FEATURES

- Only 2 moving parts (piston and control valve) means less maintenance
- Will not dry-fire
- Low pressure gas charge
- Low recoil
- Low hydraulic surge
- Dual tool retainer pins
- Hoses and quick disconnects included
- Moil Point included
- Gas recharge kit included
- Operation/Service Parts Manual
- 3 Year Warranty
- Uses standard auxiliary hydraulics

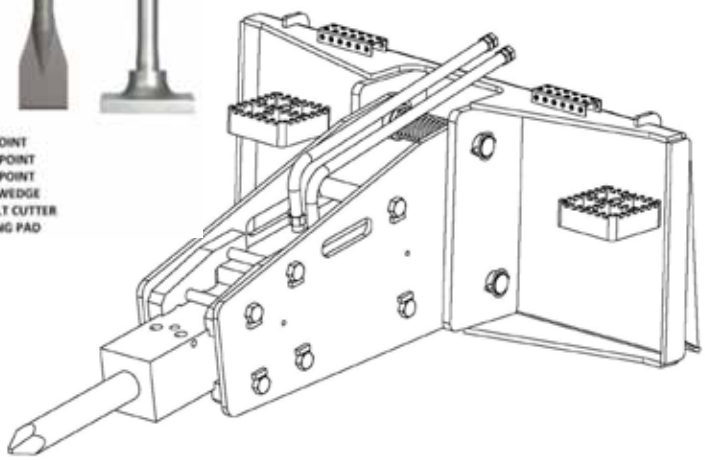

APPLICATIONS

- Demolition, construction, road maintenance

REQUIREMENTS FOR OPERATION

- Standard auxiliary hydraulics
- Demolition door

SPECIFICATIONS				
	HH-2M	HH-3M	HH-4M	HH-5M
Impact class (ft-lb)	250	350	550	825
Blows per min.	600-1150	550-1000	580-1060	550-1000
Operating wt. – lbs. (kg)	512-552 (232-250)	780-800 (354-363)	879-899 (399-408)	1076 (488)
Tool diam. – in. (mm)	2.0 (51)	2.3 (58)	2.5 (64)	3.0 (76)
Input flow – gpm (l/min)	5.3-9.2 (20-35)	6.6-12 (25-45)	8-14.5 (30-55)	9.2-16 (35-61)

HAMMER ORDERING GUIDE			
Mounting configuration		Hammer Model	Hammer Part. No.
	Single position mount bracket	HH-2M	47450982
		HH-3M	47450986
		HH-4M	47450988
		HH-5M	47450990
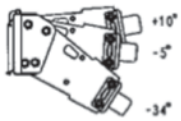	3 position mount bracket	HH-2M	47450985
		HH-3M	47450987
		HH-4M	47450989

LIFT BOOM

SKID STEER LOADERS/COMPACT TRACK LOADERS

	PART NUMBER	WEIGHT LB
LIFT BOOM 6'	86620002	400

MODEL COMPATIBILITY	L213 L215 L216	L218	L220 L221	L223	L225 L228	L230 L234		C227		C232 C234 C237 C238 C245	REQ'D EQUIPMENT					
	L150	L160 L170	L175	L180	L185	L190	C175		C185 C190		STD FLOW	HIGH FLOW	CASE DRAIN	MFH	DEMO DOOR	2ND AUX
LIFT BOOM	•	•	•	•	•	•	•	•	•	•						

FEATURES

- Overall width: 47"
- Loading depth: 25.1"
- Depth: 31"
- Overall height: 73.2"
- Reach: 83.1"
- Adds 6.5 ft. additional reach to loader

APPLICATIONS

- Ideal for moving trees/shrubs for transplanting
- Use to load and unload attachments, etc.
- Ideal for placing and removing concrete forms

Vertical Mast

(70% of Operating Load, not to exceed 6,000 pounds)

Maximum Reach

(30% of Operating Load, not to exceed 6,000 pounds)

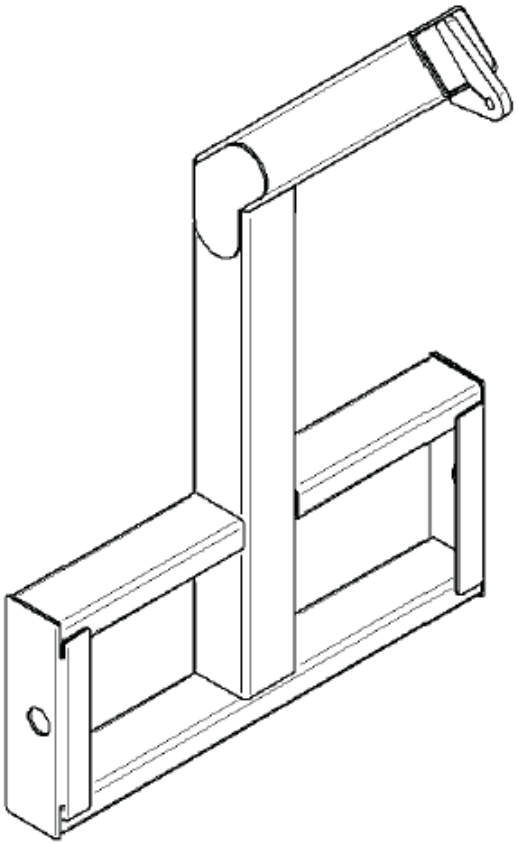

LOAD MONITOR

SKID STEER LOADERS/COMPACT TRACK LOADERS

	PART NUMBER	WEIGHT LB
WEIGHLOG 100 Load Monitor (L/C 100 Series)	87026357	12
WEIGHLOG 200 Load Monitor (L/C100 Series)	84316806	14
WEIGHLOG 100 Load Monitor (L/C 200 Series)	84512810	12
WEIGHLOG 200 Load Monitor (L/C200 Series)	84512811	14

ADDITIONAL EQUIPMENT (Order as needed)

PRINTER KIT - for WL200 ONLY	84316810	1

MODEL COMPATIBILITY	L150	L160 L170	L175	L180 L185	L190	C175	C185 C190	L213 L215 L216	L218 L220 L221	L223 L225 L228	L230 L234	C227	C232 C234 C237 C238 C245
WEIGHLOG 100 - 87026357	•	•	•	•	•	•	•						
WEIGHLOG 200 - 84316806	•	•	•	•	•	•	•						
WEIGHLOG 100 - 84512810								•	•	•	•	•	•
WEIGHLOG 200 - 84512811								•	•	•	•	•	•

FEATURES

- Static or dynamic weighing
- 5 individual display channels
- Proven sensor technology
- Backlit LCD graphic display and keypad
- Measures, displays and records net weight based on lift system pressure
- Calibrate for any bucket, pallet fork, etc.
- Internal audible alarm
- Kit comes complete with:
  - Head unit
  - Heavy duty load sensor
  - Hydraulic fitting kit
  - Reference/direction sensors
  - Remote enter button
  - Installation kit
- WeighLog is not certified for legal sale of goods

SPECIFICATIONS		
MODEL	**WL100**	**WL200**
Operating Voltage	11 - 30 vdc	
Temperature Range	32°-102° (0°-50°C)	
System Accuracy	±2% (or better)	
Pressure Range	0-4350 psi (0-250bar)	
Speed Compensated Dynamic Weighing	No	Yes
Printer Compatible	No	Yes
Warranty	1 year/parts	

MANURE FORK AND MANURE FORK WITH GRAPPLE

SKID STEER LOADERS/COMPACT TRACK LOADERS

STANDARD AUXILIARY BOOM HYDRAULICS REQUIRED (for Grapple Option Only)	PART NUMBER	WEIGHT LB
MANURE FORK, 60"	84218737	500
MANURE FORK, 66"	84218738	515
MANURE FORK, 72"	84218739	525
MANURE FORK, 84"	84218740	575

OPTIONS

Grapple Attachment (requires standard auxiliary boom hydraulics. Includes hoses and quick disconnects)	84225454	130

MODEL COMPATIBILITY	L213 L215 L216			L218 L220 L221	L223	L225 L228	L230 L234		C227		C232 C234 C237 C238 C245	REQ'D EQUIPMENT					
	L150	L160	L170 L175		L180	L185	L190	C175		C185 C190		STD FLOW	HIGH FLOW	CASE DRAIN	MFH	DEMO DOOR	2ND AUX
MANURE FORK, 60"	•	•	•									O					
MANURE FORK, 66"	•	•	•	•					•			O					
MANURE FORK, 72"			•	•	•	•	•	•	•		•	O					
MANURE FORK, 84"					•	•	•			•	•	O					

FEATURES

- All standard fork attachments are grapple-ready
- Heavy duty forged tines
- Single, heavy duty cylinder for grapple option
- Overall depth – 30"
- Overall height – 25"
- Grapple opening – 37"

APPLICATIONS

- Moves loose hay and manure
- Clean-up and transport branches, brush and limbs

REQUIREMENTS FOR OPERATION

- Standard auxiliary hydraulics for optional grapple

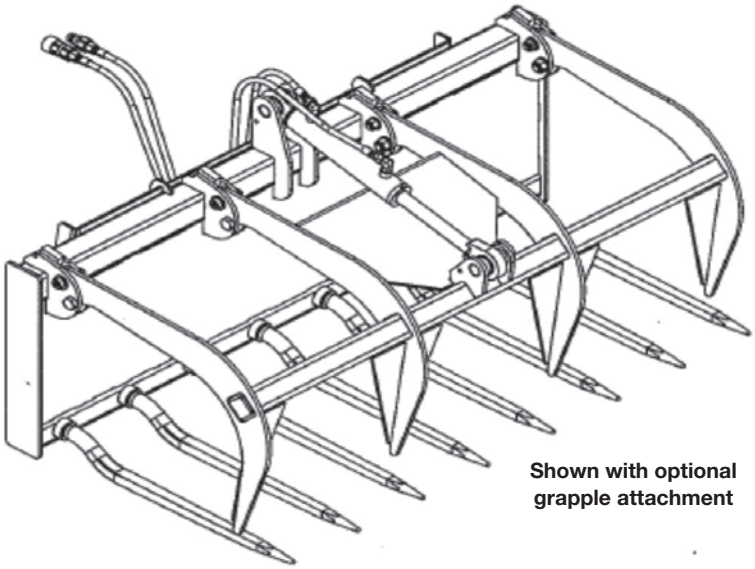

Shown with optional grapple attachment

MANURE SCRAPER

SKID STEER LOADERS/COMPACT TRACK LOADERS

	PART NUMBER	WEIGHT LB
MANURE SCRAPER 60"	84225455	376
MANURE SCRAPER 72"	84225456	413
MANURE SCRAPER 84"	84225457	472
MANURE SCRAPER 96"	84225458	508

MODEL COMPATIBILITY	L213 L215 L216			L218 L220 L221	L223	L225 L228	L230 L234		C227		C232 C234 C237 C238 C245	REQ'D EQUIPMENT					
	L150	L160	L170 L175		L180	L185	L190	C175		C185 C190		STD FLOW	HIGH FLOW	CASE DRAIN	MFH	DEMO DOOR	2ND AUX
60" MANURE SCRAPER	•	•	•														
72" MANURE SCRAPER	•	•	•	•	•	•	•	•	•								
84" MANURE SCRAPER		•	•	•	•	•	•	•	•	•	•						
96" MANURE SCRAPER					•	•	•		•	•	•						

FEATURES

- 30" overall height, 31" overall depth
- 1" x 6" reversible rubber edge
- Tapered end blades for improved visibility

APPLICATIONS

- Feedlot clean-up
- Flood clean-up
- Waste water clean-up
- Snow removal

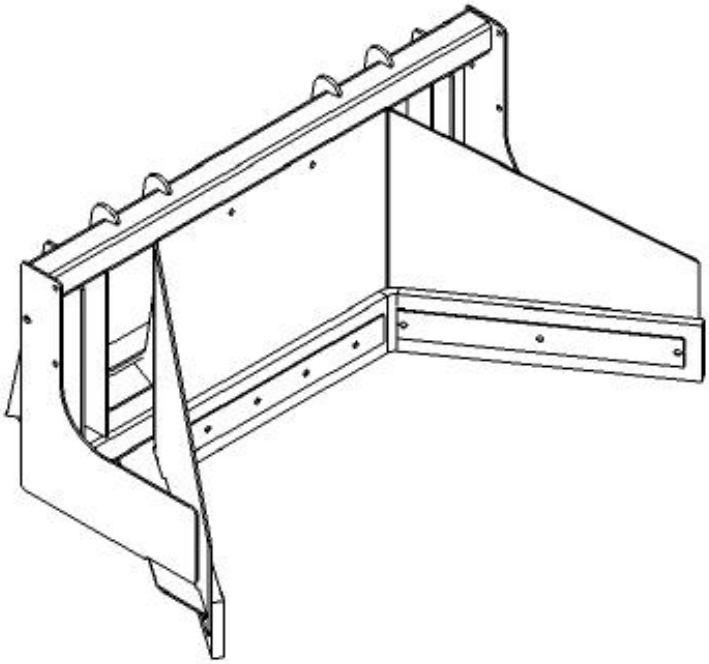

MULCHER

SKID STEER LOADERS/COMPACT TRACK LOADERS

Unit includes – see Specifications in table below

	PART NUMBER	WEIGHT LB
MULCHER – 60" with double carbide tools	84523770	2560
MULCHER – 60" with double claw tools	84554133	2560
MULCHER – 61" with double-tipped carbide tools	51472130	2678

ADDITIONAL EQUIPMENT (Order as needed)

OIL COOLER UNIT, for 60" mulcher (dealer installed)	51436796	140
DEFLECTOR DOOR KIT, for 61" mulcher (Use w/EHF configured units)	51472133	165
DEFLECTOR DOOR KIT, for 61" mulcher (Use w/HF configured units)	51472134	165

REPLACEMENT TOOLS

DOUBLE CARBIDE TOOL SET (44 tools), for 60" mulcher	84553733	140
DOUBLE CLAW TOOL SET (44 tools), for 60" mulcher	84553734	146
DOUBLE-TIPPED CARBIDE TOOL (1 tool), for 61" mulcherr (Order 30 for complete set)	51472144	3
SAMURAI KNIFE TOOL (1 tool), for 61" mulcher (Order 30 for complete set)	51472145	3

MODEL COMPATIBILITY	L213 L215 L216	L218	L220 L221	L223 L225 L228	L230 L234	C227	C232 C237	C234 C238 C245	REQ'D EQUIPMENT						
	L150	L160 L170	L175	L180 L185 L190		C175	C185 C190		STD FLOW	HIGH FLOW	EHF	CASE DRAIN	MFH	DEMO DOOR	2ND AUX
60" MULCHER					•			•			R	R	R	R	
61" MULCHER					•			•		R*	R*	R	R	R	

* Ships standard with High Flow (HF) configuration, but the same model can be easily converted at the dealership for use on Enhanced High Flow (EHF) machines

APPLICATIONS

- Land clearing, site prep
- Right-of-way maintenance
- Parks and trails
- Wildfire break lines
- Mulch trees and brush to ground level

	60" Mulcher	61" Mulcher
REQUIREMENTS FOR OPERATION		
	• Enhanced High Flow (EHF) Only • Multi-Function Control Kit • Case Drain • Demolition Door	• High Flow (HF) or Enhanced High Flow (EHF) • Multi-Function Control Kit • Case Drain • Demolition Door
SPECIFICATIONS		
Unit Includes	• Cutting tools, mounting bracket, wire harness, hoses and quick coupler	• Cutting tools, hoses, quick disconnects and enhanced high flow (EHF) electrical connector
Working Width	• 60" (1524 mm)	• 61" (1549 mm)
Overall Width	• 73" (1854 mm)	• 74" (1880 mm)
Weight	• 2,530 lb. (1148 kg)	• 2,650 lb. (1202 kg)
Flow Range	• 30-45 gpm (114-170 l/m)	• 35-45 gpm (132-170 l/m)
# of Cutting Tools	• 44	• 30
Manufacturer	• Paladin	• Fecon

Mulchers (Continued next page)

MULCHER

SKID STEER LOADERS/COMPACT TRACK LOADERS

	60" Mulcher	61" Mulcher
FEATURES		
Material Processing	• Effectively grinds 4-6" diameter material	• Effectively grinds 4-6" diameter material
Motor	• Variable displacement motor for performance optimization	• Variable 2-speed motor automatically adjusts the motor displacement to maximize rotor speed and torque to changing material loads
Rotor	• 2,000 rpm • Four second recovery time from dead stall stop • Rotor spiral cut pattern cuts the entire length of rotor and reduces the amount of cut per tool to maximize efficiency and performance	• 2,000 rpm • Drum-style rotor system features a smooth rotor surface, spiral tool pattern and innovative tool shape for smooth, efficient cutting
Cutting Tool Options	• Double carbide cutting tools are for general purpose use and provide longer life • Double claw cutting tools produces smaller chip size; not recommended for mulching below grade	• Comes standard with double-tipped carbide cutting tools for both performance and durability • Optional Samurai knife cutting tool (available separately) produces smaller chip size; not recommended for mulching below grade
Other Features	• Low profile design weighing 2,560 lb. • Adjustable push bar • Replaceable abrasion resistant AR400 wear plate on skid shoes	• Severe duty body construction features smooth top plate which easily sheds water and debris • Pin-on push bar with serrated ears adjusts to 3 positions to better direct material to feed the mulcher • Hinged motor cover provides easy service access; no tools required • Bolt-on AR400 steel skid shoes reduce plowing of material for a more uniform final result
Hydraulic Front Deflector Door	• Standard	• Optional
On-Board Pressure Gauge	• Standard	• Standard
Oil Cooler Unit	• Optional	• Not available
Warranty	• 1-year standard product warranty through Paladin for workmanship and defect not related to wear	• 1-year standard product warranty through CNH Industrial for workmanship and defect not related to wear
Parts Available in CNH Depot	• No	• Yes

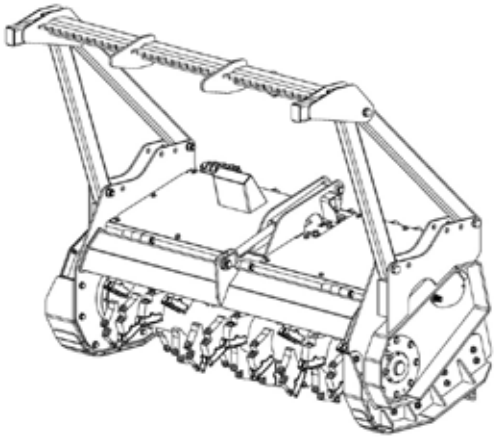

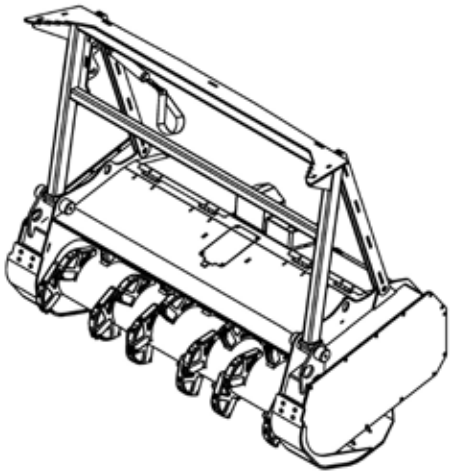

PALLET FORK

SKID STEER LOADERS/COMPACT TRACK LOADERS

Unit includes fork frame and tines.

	PART NUMBER	WEIGHT LB
PALLET FORK ASSEMBLY - 42" Tines - 2,500 lb. rated	48188360	346
PALLET FORK ASSEMBLY - 48" Tines - 2,500 lb. rated	48188361	359
PALLET FORK ASSEMBLY - 42" Tines - 4,000 lb. rated	48188362	399
PALLET FORK ASSEMBLY - 48" Tines - 4,000 lb. rated	48188363	416
PALLET FORK ASSEMBLY - 42" Tines - 5,500 lb. rated	48188365	416
PALLET FORK ASSEMBLY - 48" Tines - 5,500 lb. rated	48188366	438

ADDITIONAL EQUIPMENT (Order as needed)

FORK FRAME ONLY	48188358	220
TINE SET (2 tines) 42" - 2,500 lb. rated,1.2" x 3" x 42"	48188367	126
TINE SET (2 tines) 48" - 2,500 lb. rated,1.2" x 3" x 48"	48188368	129
TINE SET (2 tines) 42" - 4,000 lb. rated,1.4" x 4" x 42"	84354440	179
TINE SET (2 tines) 48" - 4,000 lb. rated,1.4" x 4" x 48"	84354441	196
TINE SET (2 tines) 42" - 5,500 lb. rated,1.6" x 4" x 42"	84332183	196
TINE SET (2 tines) 48" - 5,500 lb. rated,1.6" x 4" x 48"	84332184	218

MODEL COMPATIBILITY	L213 L215 L216	L218 L220 L221	L223 L225 L228	L230 L234	C227	C232 C234 C237 C238 C245	REQ'D EQUIPMENT					
	L150	L160 L170 L175	L180 L185	L190	C175	C185 C190	STD FLOW	HIGH FLOW	CASE DRAIN	MFH	DEMO DOOR	2ND AUX
PALLET FORKS - 2,500 lb. rated	•											
PALLET FORKS - 4,000 lb. rated	•	•	•		•							
PALLET FORKS - 5,500 lb. rated	•	•	•	•	•	•						

FEATURES

- Heat-treated forged tines, manually adjustable
- Locking position pins
- High visibility back guard
- Steps for easy entry to cab
- Frame forward design for use on ROPS or cab units
- Custom etching option available - for more information, see Marketing Bulletin MB18-189 on the Dealer Portal (Parts > Product Information > Attachments & Ground Engaging Tools > Attachments)

Light Duty Tines

- 42" (1067mm) or 48" (1219mm) length
- 1.2" x 3" (30mm x80mm) cross-section
- 2500# Class II (1140 kg) - Rated at 24" (600mm) - 2 tines

Standard Tines

- 42" (1067mm) or 48" (1219mm) length
- 1.4" x 4" (35mm x 100mm) cross-section
- 4000# Class II (1800 kg) - Rated at 24" (600mm) - 2 tines

Heavy Duty Tines

- 42" (1067mm) or 48" (1219mm) length
- 1.6" x 4" (40mm x 100mm) cross-section
- 5500# Class II (2500 kg) - Rated at 24" (600mm) - 2 tines

APPLICATIONS

- Handling pallets and construction materials

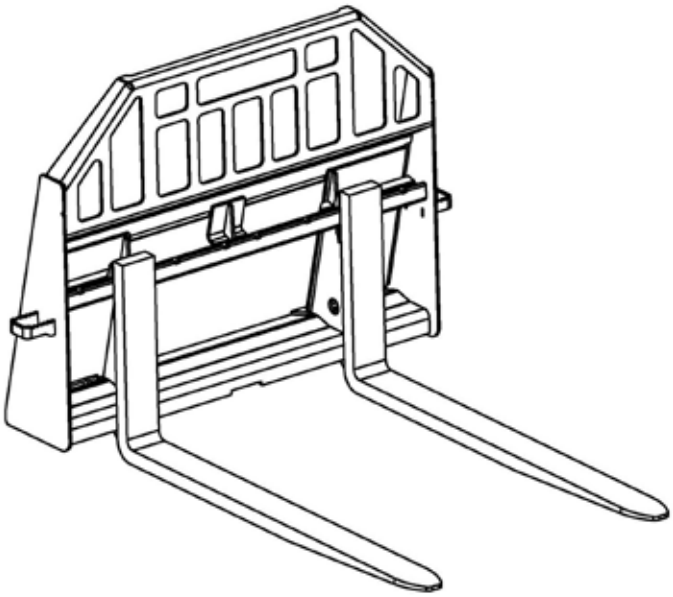

PALLET FORK (ROPS)

SKID STEER LOADERS/COMPACT TRACK LOADERS

Unit includes fork frame and tines.

	PART NUMBER	WEIGHT LB
PALLET FORK ASSEMBLY - 42" Tines - 4,000 lb. rated	84354434	401
PALLET FORK ASSEMBLY - 48" Tines - 4,000 lb. rated	84354436	418
PALLET FORK ASSEMBLY - 42" Tines - 5,500 lb. rated	84332178	418
PALLET FORK ASSEMBLY - 48" Tines - 5,500 lb. rated	84332179	440

ADDITIONAL EQUIPMENT (Order as needed)

FORK FRAME ONLY	84348692	222
TINE SET (2 tines) 42" - 4,000 lb. rated,1.4" x 4" x 42"	84354440	179
TINE SET (2 tines) 48" - 4,000 lb. rated,1.4" x 4" x 48"	84354441	196
TINE SET (2 tines) 42" - 5,500 lb. rated,1.6" x 4" x 42"	84332183	196
TINE SET (2 tines) 48" - 5,500 lb. rated,1.6" x 4" x 48"	84332184	218

MODEL COMPATIBILITY	L213 L215 L216	L218 L220 L221	L223 L225 L228	L230 L234	C227	C232 C234 C237 C238 C245	REQ'D EQUIPMENT					
	L150	L160 L170 L175	L180 L185	L190	C175	C185 C190	STD FLOW	HIGH FLOW	CASE DRAIN	MFH	DEMO DOOR	2ND AUX
PALLET FORKS - 4,000 lb. rated	•	•	•		•							
PALLET FORKS - 5,500 lb. rated	•	•	•	•	•	•						

FEATURES

- Heat-treated tines, manually adjustable
- Locking position pins
- High visibility back guard
- Steps for easy entry to cab
- ROPS frame:
  - Original design
  - Close-coupled frame
  - High lift capacity
  - Back guard contact with fully open cab door on some models

Standard Tines

- 42" (1067mm) or 48" (1219mm) length
- 1.4" x 4" (35mm x 100mm) cross-section
- 4000# (1800 kg) - Rated at 24" (600mm) - 2 tines

Heavy Duty Tines

- 42" (1067mm) or 48" (1219mm) length
- 1.6" x 4" (40mm x 100mm) cross-section
- 5500# (2500 kg) - Rated at 24" (600mm) - 2 tines

APPLICATIONS

- Handling pallets and construction materials

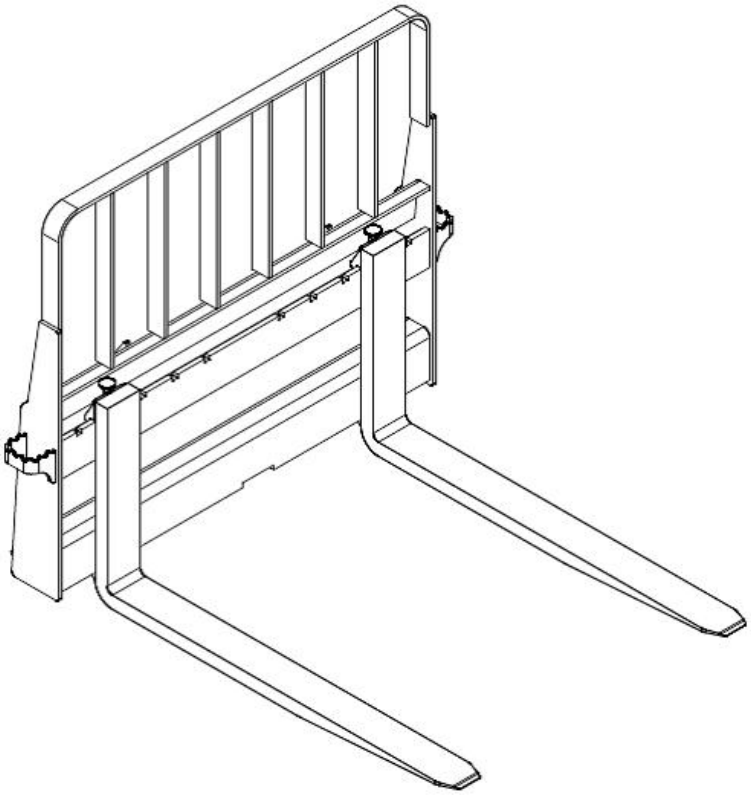

PALLET/NURSERY FORK - HYDRAULIC POSITIONING

SKID STEER LOADERS/COMPACT TRACK LOADERS

Unit includes tines, hoses and quick disconnects.

	PART NUMBER	WEIGHT LB
COMPLETE UNITS		
PALLET FORKS, Hyd. Positioning with 42" Tines	47909707	571
PALLET FORKS, Hyd. Positioning with 48" Tines	47909708	592
NURSERY FORKS, Hyd. Positioning with 48" Tines and Nursery Sleeves	48124313	831
FRAME ONLY		
PALLET FORKS, Hyd. Positioning, Frame Only without tines (use std ITA Class II, 3" or 4" width tines)	47909711	376
OPTIONAL EQUIPMENT (Order as needed)		
KIT, Tines and Nursery Sleeves only	48124315	400

MODEL COMPATIBILITY	L213 L215 L216		L218 L220 L221	L223 L225 L228	L230 L234		C227		C232 C234 C237 C238 C245	REQ'D EQUIPMENT					
	L150	L160	L170 L175	L180 L185	L190	C175		C185 C190		STD FLOW	HIGH FLOW	CASE DRAIN	MFH	DEMO DOOR	2ND AUX
PALLET FORKS, Hyd. Positioning, 42" Tines	•	•	•	•	•	•	•	•	•	R					
PALLET FORKS, Hyd. Positioning, 48" Tines	•	•	•	•	•	•	•	•	•	R					
NURSERY FORKS, Hyd. Positioning, 48" Tines and Nursery Sleeves	•	•	•	•	•	•	•	•	•	R					

FEATURES

- Hydraulically position tines from 10" to 44" spacing (outside to outside)
- Excellent operator visibility
- Steps for easy entry to cab
- Zinc plated, corrosion resistant components
- Center mount, 4 inch wide fork carriers
- 42/48" Tines - 1-1/2" x 4" cross-section
- 5500#/pair ITA Class II rated tines
- Hoses and flat face hydraulic disconnects included
- The pin-on nursery sleeves protect the tree root ball when clamping and transporting

APPLICATIONS

- Handling pallets and construction materials
- Nursery Forks – pick up and transport nursery stock

REQUIREMENTS FOR OPERATION

- Standard auxiliary hydraulics

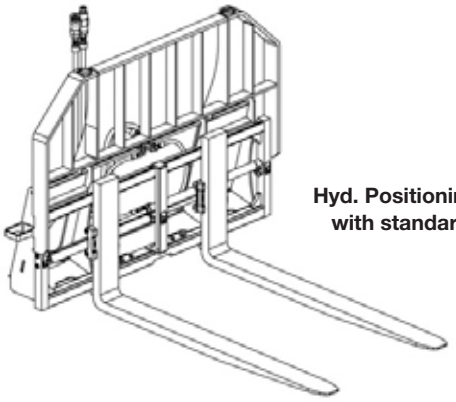

Hyd. Positioning frame with standard tines

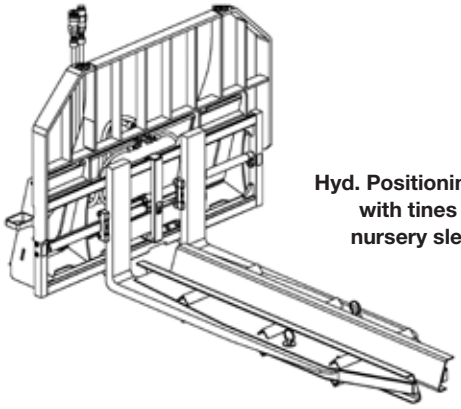

Hyd. Positioning frame with tines and nursery sleeves

POST DRIVER

SKID STEER LOADERS/COMPACT TRACK LOADERS

Unit includes hoses and quick disconnects.

	PART NUMBER	WEIGHT LB
POST DRIVER - MODEL PD4800	84258059	1385

COMPLETING KITS (Must select one for complete unit)

Square collar and striker plate assy 3.5"	84258062	63
Square collar and striker plate assy 6"	84258063	65
Square collar and striker plate assy 8"	84258064	66
Collar and striker plate assy 6" X 8"	84258065	64

OPTIONAL EQUIPMENT (Order as needed)

Round collar, 3"	84258066	15
Square collar, 3.5"	84258067	15
Round collar, 4"	84258068	15
H beam collar 4" X 6"	84258070	15
Round collar, 6"	84258071	15
Square collar, 6"	84258073	15
Square collar, 8"	84258074	15
Collar, 6" X 8"	84258076	15
T post adapter (use w/ 6" round or 6" square collar)	84258078	15

MODEL COMPATIBILITY	L213	L215 L216	L218	L220 L221	L223	L225 L228	L230 L234		C227		C232 C234 C237 C238 C245	REQ'D EQUIPMENT					
		L150	L160 L170	L175	L180	L185	L190	C175		C185 C190		STD FLOW	HIGH FLOW	CASE DRAIN	MFH	DEMO DOOR	2ND AUX
POST DRIVER			•	•	•	•	•	•	•	•	•	R					

FEATURES

- May be used with Tilt-Attach
- Manual side shift
- 24 gpm maximum flow
- Quick change striker plate and collar assemblies
- Designed for smooth operation with no shock load back to the skid steer

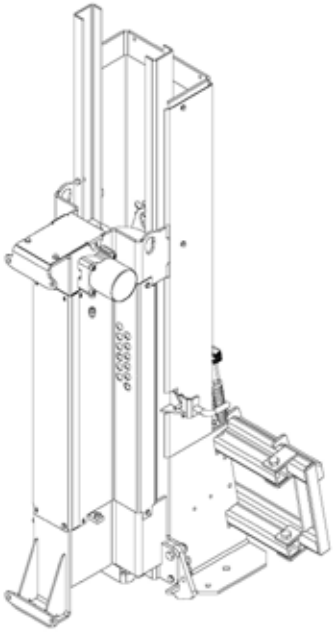

REQUIREMENTS FOR OPERATION

- Standard auxiliary hydraulics

SPECIFICATIONS	
Length	38.69"
Width	54.25"
Height	91.48"
Maximum stroke	48"
Weight (lbs)	1,360
Hammer weight, standard (lbs)	289
Maximum hammer wt (lbs)	600
Strokes per minute	42
Minimum hydraulic pressure	2000 psi
Maximum flow	24 gpm
Impact energy w/289 lb wt	1,156 ft-lb
Impact energy w/600 lb wt	2,400 ft-lb

POST PULLER

SKID STEER LOADERS/COMPACT TRACK LOADERS

Unit includes mounting brackets, hoses, quick disconnects, interchangeable V and double cam jaws.

STANDARD FLOW AUXILIARY BOOM HYDRAULICS REQUIRED	PART NUMBER	WEIGHT LB
POST PULLER P1200	87027537	900

MODEL COMPATIBILITY	L213 L215 L216	L218	L220 L221	L223	L225 L228	L230 L234		C227		C232 C234 C237 C238 C245	REQ'D EQUIPMENT					
	L150	L160 L170	L175	L180	L185	L190	C175		C185 C190		STD FLOW	HIGH FLOW	CASE DRAIN	MFH	DEMO DOOR	2ND AUX
POST PULLER	•	•	•	•	•	•	•	•	•	•	R					

FEATURES

- 17,000 Lb. pulling force
- Will pull up from 1" to 7-1/2" round posts, guardrail, T-posts, H-posts
- No dangerous chains
- Push bar prevents post from entering cab
- Includes interchangeable V-jaw and double cam jaw
- Unused jaw assembly stores on unit
- Allows one person to safely pull wood posts, steel posts and guardrail in seconds, with one smooth motion

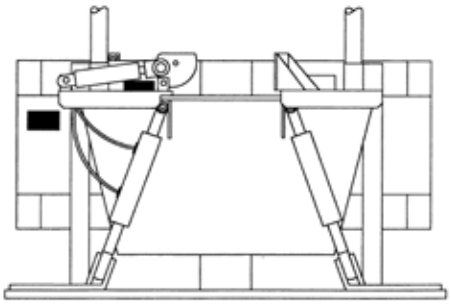

V-Jaw

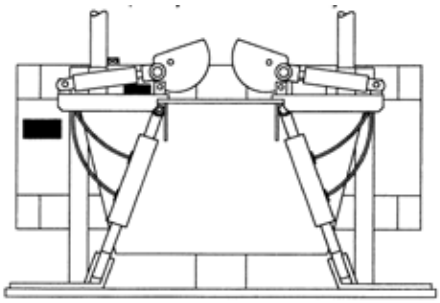

Double Cam Jaw

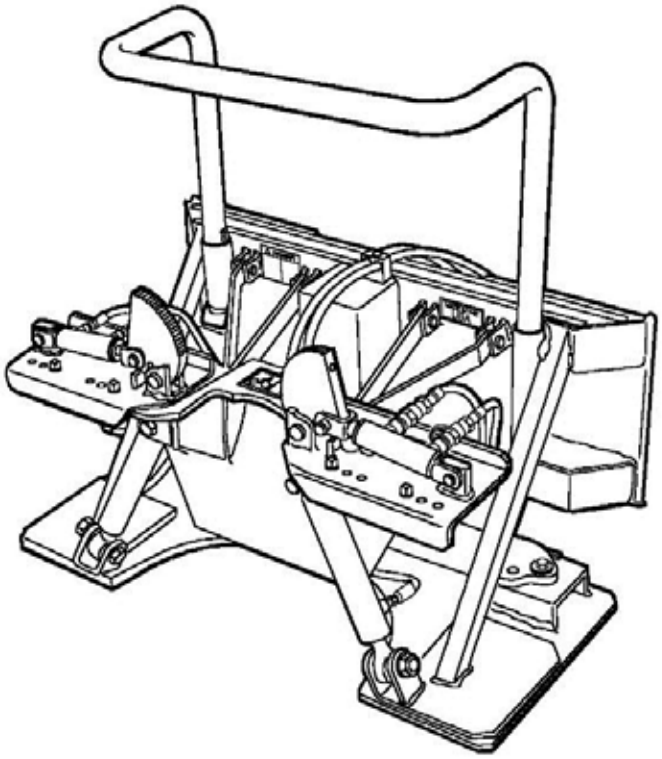

PREPARATOR® LANDSCAPE RAKE

SKID STEER LOADERS/COMPACT TRACK LOADERS

Package includes complete unit with mounting plate, hoses and quick couplers.

REQUIRES STANDARD AUXILIARY BOOM HYDRAULICS	PART NUMBER	WEIGHT LB
PREPARATOR® LANDSCAPER GRADER RAKE, 66"	9863807	1450
PREPARATOR® LANDSCAPER GRADER RAKE, 76"	9863808	1550

MODEL COMPATIBILITY	L213 L215 L216		L218	L220 L221	L223	L225 L228	L230 L234		C227		C232 C234 C237 C238 C245	REQ'D EQUIPMENT					
	L150	L160	L170	L175	L180	L185	L190	C175		C185 C190		STD FLOW	HIGH FLOW	CASE DRAIN	MFH	DEMO DOOR	2ND AUX
PREPARATOR - 66"	•	•	•	•	•			•	•			R					
PREPARATOR - 76"			•	•	•	•	•	•	•	•	•	R					

FEATURES

- Conditions the soil with scarifying action while picking up debris
- Picks up rocks from 3/4" to 6" diameter
- Ruggedly built to withstand constant use
- 1/2" flat face couplers on Preparator for current model skid-steer loaders

APPLICATIONS

- An all-in-one landscaping tool; levels out ridges and ruts; cuts out grass that needs reseeding; prepares soil for planting

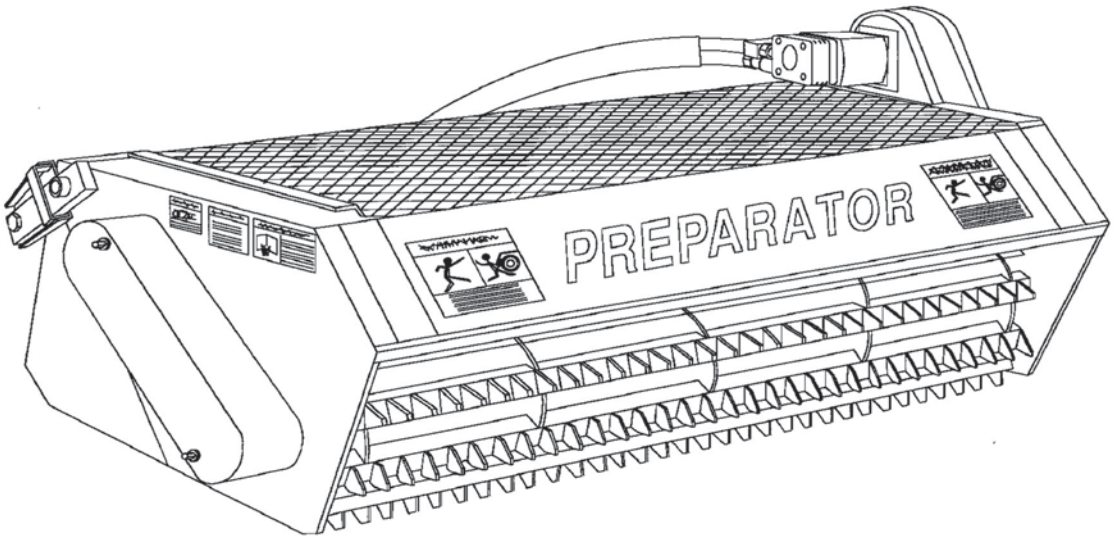

Preparator Landscape Grader Rake (Continued next page)

PREPARATOR® LANDSCAPE RAKE

SKID STEER LOADERS/COMPACT TRACK LOADERS

SPECIFICATIONS		
MODEL	**PREPARATOR 66"**	**PREPARATOR 76"**
BUCKET		
Capacity	10.32 ft^3 (0.29m^3)	12.50 ft^3 (0.35m^3)
Overall Width	74.75 in. (190 cm)	84.75 in. (215 cm)
Swath Width	66.0 in. (168 cm)	76.0 in. (193 cm)
Overall Height	25.53 in. (65 cm)	25.53 in. (65 cm)
Overall Length	60.13 in. (153 cm)	60.13 in. (153 cm)
DRUM		
RPM-r/min	0 - 86	0 - 86
Overall Diameter	12.5 in. (54.6 cm)	21.5 in. (54.6 cm)
Rake Bar (square steel tubing)	2 in. x 2 in. (50.8 x 50.8 mm)	2 in. x 2 in. (50.8 x 50.8 mm)
Teeth	T-1 Steel	T-1 Steel
Tooth Thickness	0.19 in. (4.82 mm)	0.19 in. (4.82 mm)
Tooth Length	2.19 in. (55.6 mm)	2.19 in. (55.6 mm)
Number of Teeth	310	350
HYDRAULIC MOTOR		
Operating RPM Range	10 - 18 gpm (38 - 61 L/min) @ 2300 psi (15 858 kPa)	10 - 18 gpm (38 - 61 L/min @ 2300 psi (15 858 kPA)
Horsepower	12 - 23 (8.9 - 17.1 kW)	12 - 23 (8.9 - 17.1 kW)
Torque	11,701 lb-in (1322 N-m)	11,701 lb-in (1322 N-m)
DRIVE CHAINS		
Rake Drive	#80H Roller Chain	#80H Roller Chain
Brush Drive	#50H Roller Chain	#50H Roller Chain
Overall Weight	1,270 lb (576 kg)	1,465 lb (664 kg)

REAR STABILIZER

SKID STEER LOADERS/COMPACT TRACK LOADERS

BASE STABILIZER PACKAGE includes rear stabilizers (less pads) and mounting brackets. Hydraulic kits required as indicated.

REQUIRES STANDARD AUXILIARY BOOM HYDRAULICS	PART NUMBER	WEIGHT LB
STABILIZER PKG, 100 Series (includes flat pads)	86619893	400
STABILIZER PKG, 200 Series	84518504	460
STABILIZER PKG, 200 Series	84518505	480

ADDITIONAL COMPONENTS FOR 100 SERIES LOADERS
(Must order mounting kit and hydraulic kit as indicated for complete unit.)

MOUNTING KIT LS160, LS170, L160, L170, L175, C175	86619894	110
MOUNTING KIT for LS180, LS190	86619895	110
MOUNTING KIT for LS180.B, LS185.B, LS190.B, LT185.B, LT190.B, L180, L185, L190, C185, C190	87053915	110
HYDRAULIC KIT (for use with rear aux. kits - see loader pages) Includes hoses and quick couplers.	86619896	15
HYDRAULIC KIT (for use with valve mounted on attachment, i.e tree spades) Includes hoses from stabilizers to attachment with quick couplers.	86619897	22
BACKHOE HYDRAULIC KIT (for use with backhoes 511, 609, 611) Includes hoses from stabilizers to backhoe, selector valve and quick couplers.	86619898	20
WEIGHT KIT BRACKETS allows up to four (27 kg) standard NH weights to be mounted to each stabilizer tower. Weights not included.	86619899	50

ADDITIONAL COMPONENTS FOR 200 SERIES LOADERS
(Must order hydraulic kit as indicated and pad kit for complete unit.)

HYDRAULIC KIT - FOR USE W/ATTACHMENT VALVE (L221, C227, C234)	84518506	20
HYDRAULIC KIT - FOR USE W/2ND AUXILIARY KIT (L221, C227, C234)	84546390	20
HYDRAULIC. KIT - FOR USE W/ATTACHMENT VALVE (L218, L220, L223, L225, L228, L230, L234, C232, C234, C237, C238, C245)	84518507	25
HYDRAULIC KIT - FOR USE W/2ND AUXILIARY KIT (L218, L220, L223, L225, L228, L230, L234, C232, C234, C237, C238, C245)	84546391	25
GROUSER PAD SET	87053914	45
FLAT PAD SET	86590028	39

Rear Stabilizer (Continued next page)

REAR STABILIZER

SKID STEER LOADERS/COMPACT TRACK LOADERS

MODEL COMPATIBILITY	L150	L160 L170 L175	LS180 LS190	LS180.B LS185.B L180, L185 L190	C175	LT185.B LT190.B C185, C190	L213 L215 L216	L218 L220	L221	L223 L225 L228	L230 L234	C227	C234	C232 C237 C238 C245	REQ'D EQUIP STD FLOW	REQ'D EQUIP 2ND AUX
REAR STABILIZER - 86619893		•	•	•	•	•									R	O
MOUNTING KIT - 86619894		•			•											
MOUNTING KIT - 86619895			•													
MOUNTING KIT - 87053915				•		•										
REAR STABILIZER - 84518504								•	•			•			R	O
REAR STABILIZER - 84518505										•	•		•	•	R	O
HYDRAULIC KIT - 84518506									•			•	•			
HYDRAULIC KIT - 84546390									•			•	•			R
HYDRAULIC KIT - 84518507								•		•	•			•		
HYDRAULIC KIT - 84546391								•		•	•			•		R

FEATURES

- Use with tree spades, backhoes, etc.

REQUIREMENTS FOR OPERATION

- 2nd auxiliary or attachment valve with extra auxiliary hydraulic function

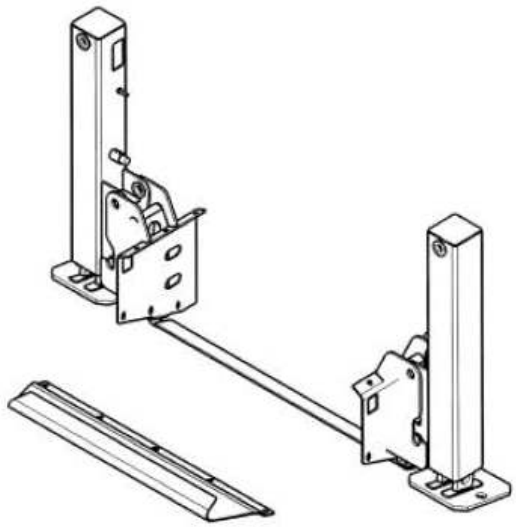

100 Series

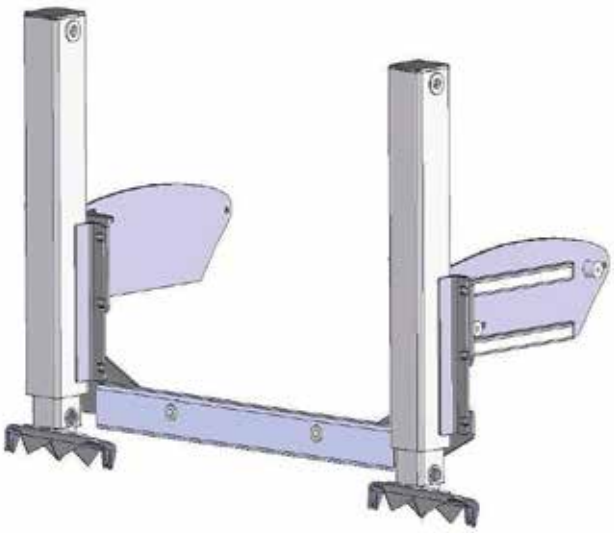

200 Series

ROCK BUCKET

SKID STEER LOADERS/COMPACT TRACK LOADERS

REQUIRES STANDARD AUXILIARY BOOM HYDRAULICS	PART NUMBER	WEIGHT LB
Rock Bucket 66" - 3" tine	86900289	555
Rock Bucket 66" - 2" tine	87027538	680
Rock Bucket 75" - 3" tine	86900290	625
Rock Bucket 75" - 2" tine	87027539	680
Rock Bucket 84" - 3" tine	87027540	692

OPTIONAL EQUIPMENT

Grapple attachment for 75" and 84" Rock Buckets Requires standard auxiliary boom hydraulics.	87389692	490

MODEL COMPATIBILITY	L213 L215 L216	L218	L220 L221	L223	L225 L228	L230 L234		C227		C232 C234 C237 C238 C245	REQ'D EQUIPMENT					
	L150	L160 L170	L175	L180	L185	L190	C175		C185 C190		STD FLOW	HIGH FLOW	CASE DRAIN	MFH	DEMO DOOR	2ND AUX
66" ROCK BUCKET	•	•	•					•								
75" ROCK BUCKET		•	•	•	•	•	•	•		•	O					
84" ROCK BUCKET				•	•	•			•	•	O					

FEATURES

- Designed to hold the collected rocks and debris while leaving the soil
- Tine spacing determines the size of rocks and debris that will be retained while allowing the soil to sift back to the ground
- 2" tine spacing keep bricks in the bucket for easier clean up around job sites
- The rake design is used to gather material away from buildings and obstructions, for faster clean up of debris, to level out clumps of dirt and pick-up pieces of sod

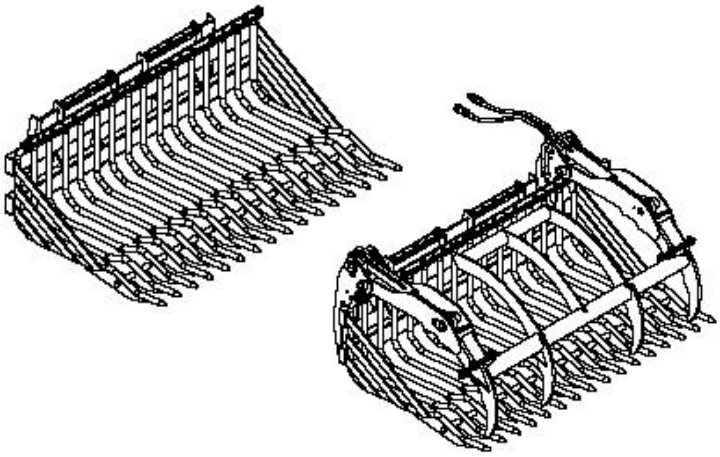

FEATURES

- Rake - Pile - Load debris from construction sites, pastures, fields, etc.

SPECIFICATIONS			
DESCRIPTION	66"	75"	84"
A. Overall Width	65.9"	74.4"	82.9"
B. Overall Depth	49.8"	49.8"	49.8"
C. Overall Height	21.8"	21.8"	21.8"
D. Tine Spacing	4.25"	4.25"	4.25"
(center to center)	or 3.15"	or 3.15"	or 3.15"
(between tines)	3.1" or 2"	3.1" or 2"	3.1"
Number of Tines	16 or 21	18 or 24	20
Tine Rod Diameter	1.1"	1.1"	1.1"

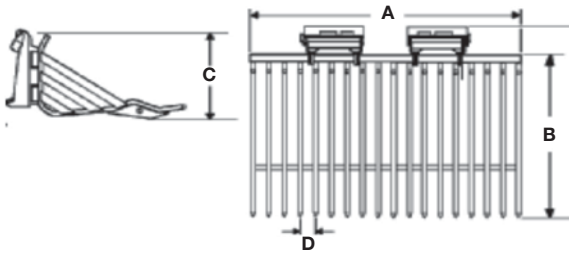

ROCK SAW

SKID STEER LOADERS/COMPACT TRACK LOADERS

Rock wheel package includes drum, hydraulic depth and sideshift, hoses and quick couplers. Must select drum pick kit for required width. LH Multi-function handle control kit is **required** (unless loader has been previously equipped). See loader pages.

HIGH FLOW AUXILIARY BOOM HYDRAULICS AND MULTIFUNCTION CONTROL HANDLE REQUIRED	PART NUMBER	WEIGHT LB
Rock Saw, RS18, 18"	87523114	1775
Rock Saw, RS 24, 24"	87523115	2095
EHF Rock Saw, RS18, 18"	84523781	1775
EHF Rock Saw, RS 24, 24"	84523783	2095

ADDITIONAL COMPONENTS (Must Select One for Complete Unit)

2.5" drum/pick kit for RS18	87523118	220
4" drum/pick kit for RS18	87523119	245
2.5" drum/pick kit for RS24	87523120	290
4" drum/pick kit for RS24	87523121	325

MODEL COMPATIBILITY	L213 L215 L216	L218 L220 L221	L223	L225 L228		L230 L234		C227		C232 C237	C234 C238 C245	REQ'D EQUIPMENT						
	L150 L160	L170 L175	L180	L185	L190		C175		C185 C190			STD FLOW	HIGH FLOW	EHF	CASE DRAIN	MFH	DEMO DOOR	2ND AUX
ROCK SAW, RS18, 18			•	•	•	•			•	•	•		R		R	R		
ROCK SAW, RS 24, 24				•	•	•			•	•	•		R		R	R		
EHF ROCK SAW, RS18, 18						•					•	R		R	R	R		
EHF ROCK SAW, RS24, 24						•					•	R		R	R	R		

FEATURES

- Planetary drive
- Convenient electro-hydraulic control for depth and sideshift
- Dual side discharge of material
- Pick removal tool included
- Available in 2.5" and 4" wheel widths
- 40-gallon Pressurized Water Kit available (See “Water Kits”)

APPLICATIONS

- Slot cutting
- Utility cuts for gas, water, sewer, electrical and cable TV installation and repair
- Asphalt patch cuts
- Cuts to create expansion joints in roadways

REQUIREMENTS FOR OPERATION

- High flow auxiliary hydraulics (EHF for specified units)
- Multi-function Control Kit
- Case Drain

Rock Saw (Continued next page)

ROCK SAW

SKID STEER LOADERS/COMPACT TRACK LOADERS

SPECIFICATIONS		
MODEL	**RS18**	**RS24**
Operating Weight - lb. (kg)	2020 (916)	2420 (1098)
Cutting Depth - in. (mm)	0-18 (0-457)	0-24 (0-610)
Cutting Width - in. (mm)	2.5 (64)/4 (102)	2.5 (64)/4 (102)
Drum Diameter - in. (mm)	48(1219)	60(1524)
Sideshift - in. (mm)	-3-22(-76-560) center to right	-3-22 (-76-560) center to right
Hydraulic requirement - gpm (l/m)	30-40 (114-151)	35-40 (132-151)
Hydraulic requirement - psi (bar)	2500-3500 (172-241)	2500-3500 (172-241)
EHF Units Hydraulic requirement - psi (bar)	4000 (275)	4000 (275)
Drive	Planetary	Planetary
Controls	Full hydraulic with in-cab controls	Full hydraulic with in-cab controls
No. of Carbide Picks	42	56

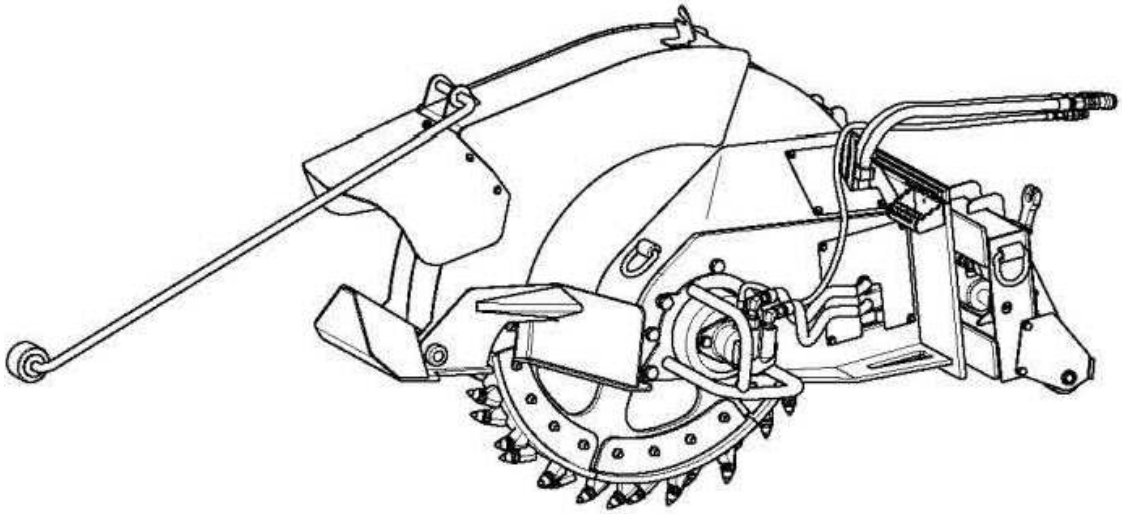

ROOT RAKE

SKID STEER LOADERS/COMPACT TRACK LOADERS

Unit includes skid steer mounting bracket, hoses and quick couplers.

REQUIRES STANDARD AUXILIARY BOOM HYDRAULICS	PART NUMBER	WEIGHT LB
72" Root Rake	87382370	1095
78" Root Rake	87389706	1140
84" Root Rake	87389707	1250

MODEL COMPATIBILITY	L213 L215 L216	L218	L220 L221	L223	L225 L228	L230 L234		C227		C232 C234 C237 C238 C245	REQ'D EQUIPMENT					
	L150	L160 L170	L175	L180	L185	L190	C175		C185 C190		STD FLOW	HIGH FLOW	CASE DRAIN	MFH	DEMO DOOR	2ND AUX
72" ROOT RAKE		•	•	•	•	•	•	•			R					
78" ROOT RAKE			•	•	•	•	•	•		•	R					
84" ROOT RAKE					•	•			•	•	R					

FEATURES

- Upper push-bar, aggressive profiles with H&L-230 style teeth work Together to neatly gather material into more manageable pile
- Zinc plated, greasable, pivot pins with protected grease zerks, and replaceable hardened steel bushings at all pivot locations
- Pilot operated check for positive lock clamping
- Weld-on D-ring for countless applications

APPLICATIONS

- Rake - Pile - Load debris from construction sites, pastures, fields, storm damage, etc.

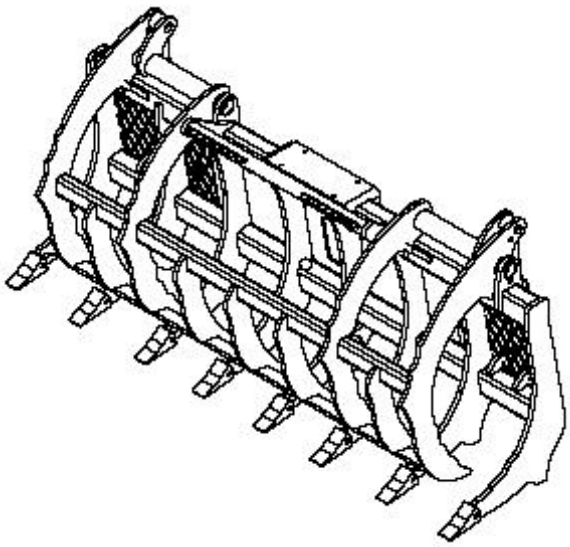

ROTARY CUTTER – AMMBUSHER

SKID STEER LOADERS/COMPACT TRACK LOADERS

Unit includes lift limit chain, hoses, quick disconnects, front safety chains and gauge wheel.

DEMOLITION SAFETY DOOR AND STANDARD FLOW AUXILIARY BOOM HYDRAULICS REQUIRED	PART NUMBER	WEIGHT LB
60" ROTARY CUTTER	9863736	1050
72" ROTARY CUTTER	9863737	1250

MODEL COMPATIBILITY	L213 L215 L216	L218	L220 L221	L223	L225 L228	L230 L234		C227		C232 C234 C237 C238 C245	REQ'D EQUIPMENT					
	L150	L160 L170	L175	L180	L185	L190	C175		C185 C190		STD FLOW	HIGH FLOW	CASE DRAIN	MFH	DEMO DOOR	2ND AUX
60" ROTARY CUTTER	•	•	•	•	•	•	•	•	•	•	R				R	
72" ROTARY CUTTER		•	•	•	•	•	•	•	•	•	R				R	

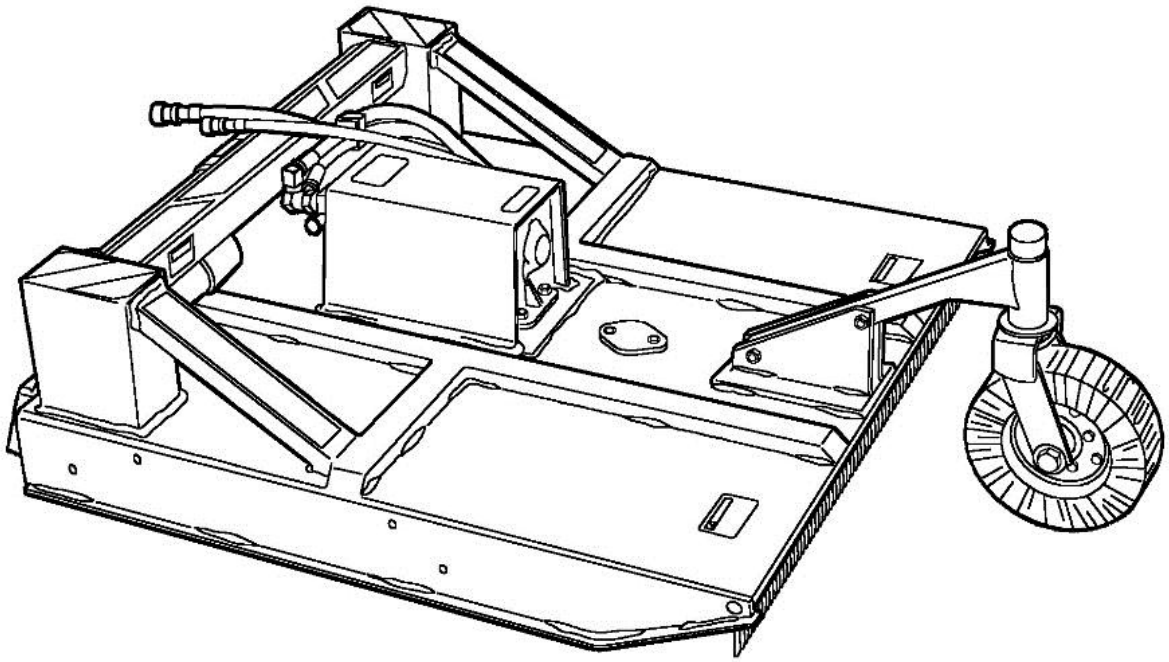

ROTARY CUTTER – EXTREME

SKID STEER LOADERS/COMPACT TRACK LOADERS

Unit includes base mower, mounting frame, safety chain, quick disconnects and hoses.

EXTREME DUTY GROUND SHARK ™ Brush Cutter	PART NUMBER	WEIGHT LB
ROTARY CUTTER, 72" High Flow (30 - 45 gpm)	47898420	2150

ADDITIONAL EQUIPMENT (Order as needed)

CARBIDE TOOTH KIT	47898425	10

REPLACEMENT BLADE SETS

REPLACEMENT BLADE KIT (4 blades with hardware)	47898427	103
WEAR SHOE REPLACEMENT KIT	47898429	30

MODEL COMPATIBILITY	L213 L215 L216			L218 L220	L221	L223 L225 L228	L230 L234		C227		C232 C234 C237 C238 C245	REQ'D EQUIPMENT					
	L150	L160	L170 L175			L180 L185	L190	C175		C185 C190		STD FLOW	HIGH FLOW	CASE DRAIN	MFH	DEMO DOOR	2ND AUX
ROTARY CUTTER, 72" High Flow (30 - 45 gpm)						•	•		•	•	•		R			R	

FEATURES

- Direct drive motor with options for 30 to 45 gpm with dual internal reliefs for drive system protection and fast, controlled shut down
- Pressure relief valve on the hydraulic motor protects against pressure spikes that could damage the drive system
- Four double bevel edge blades
- Capable of cutting heavy brush and sapling trees up to 7" in diameter
- Standard pressure gauge to help prevent excessive stalling and overheating
- Heavy-duty 1/4" high strength steel deck for added strength and rigidity
- Heavy duty push bar pushes trees away from the operator
- Optional 18 tooth carbide stump grinding kit increases mulching performance
- Retractable front shield to utilize more of the blade in heavy material
- Replaceable skid shoes
- Lift limiting safety chain
- Hoses and flat face hydraulic disconnects included

APPLICATIONS

- Roadside maintenance, right of way clearing, site preparation, fire control, fence line maintenance, and trail maintenance

REQUIREMENTS FOR OPERATION

- Demolition Door (must order separately from CNH Industrial Parts & Service)
- High flow auxiliary hydraulics

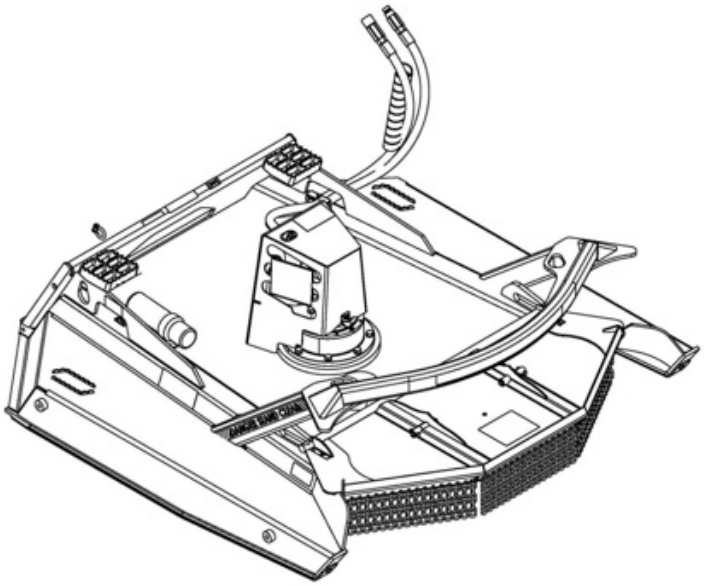

ROTARY CUTTER

SKID STEER LOADERS/COMPACT TRACK LOADERS

Unit includes base mower, mounting frame, safety chain, quick disconnects and hoses.

DEMOLITION SAFETY DOOR AND STANDARD FLOW AUXILIARY BOOM HYDRAULICS REQUIRED	PART NUMBER	WEIGHT LB
ROTARY CUTTER, 60" Std Flow (15 - 25 gpm)	47591779	1225
ROTARY CUTTER, 72" Std Flow (15 - 25 gpm)	47591780	1375
ROTARY CUTTER, 78" Std Flow (15 - 25 gpm)	47591781	1460
ROTARY CUTTER, 72" High Flow (26 - 32 gpm)	47591782	1375
ROTARY CUTTER, 72" High Flow (32 - 40 gpm)	47591783	1495
ROTARY CUTTER, 78" High Flow (26 - 32 gpm)	47591784	1460
ROTARY CUTTER, 78" High Flow (32 - 40 gpm)	47591785	1580

ADDITIONAL EQUIPMENT (Order as needed)

PRESSURE INDICATOR KIT - SF/26-32HF	47591794	10
PRESSURE INDICATOR KIT - 32-40HF	47591795	10
DUAL WHEEL KIT (UNDER DECK)	47591797	85
WEAR SHOE REPLACEMENT KIT	47591801	15

REPLACEMENT BLADE SETS

REPLACEMENT BLADES - 60"	47591798	45
REPLACEMENT BLADES - 72"	47591799	50
REPLACEMENT BLADES - 78"	47591800	55

MODEL COMPATIBILITY	L213	L215 L216		L218 L220 L221	L223		L225 L228 L230 L234		C227		C232 C234 C237 C238 C245	REQ'D EQUIPMENT					
		L150	L160	L170 L175		L180 L185	L190	C175		C185 C190		STD FLOW	HIGH FLOW	CASE DRAIN	MFH	DEMO DOOR	2ND AUX
60" ROTARY CUTTER (15-25) 47591779		•	•	•				•	•			R				R	
72" ROTARY CUTTER (15-25) 47591780				•	•	•	•	•	•	•	•	R				R	
78" ROTARY CUTTER (15-25) 47591781					•	•	•			•	•	R				R	
72" ROTARY CUTTER - HIGH FLOW (26-32) 47591782				•	•			•	•				R			R	
72" ROTARY CUTTER - HIGH FLOW (32-40) 47591783						•	•			•	•		R	R		R	
78" ROTARY CUTTER - HIGH FLOW (26-32) 47591784					•								R			R	
78" ROTARY CUTTER - HIGH FLOW (32-40) 47591785							•			•	•		R	R		R	

FEATURES

- Direct drive motor with options for 15 to 40 gpm with dual internal reliefs for drive system protection and fast, controlled shut down
- 3-blade carrier
- Double edged blades for bi-directional cutting
- Optional pressure gauge to help prevent excessive stalling and overheating
- Heavy-duty 1/4" high strength steel deck for added strength and rigidity
- Replaceable skid shoes
- Lift limiting safety chain
- Hoses and flat face hydraulic disconnects included

APPLICATIONS

- For small trees and brush up to 4" in diameter

REQUIREMENTS FOR OPERATION

- Demolition Door (must order separately from CNH Industrial Parts & Service)
- Standard auxiliary hydraulics (as indicated)
- High flow auxiliary/case drain (as indicated)

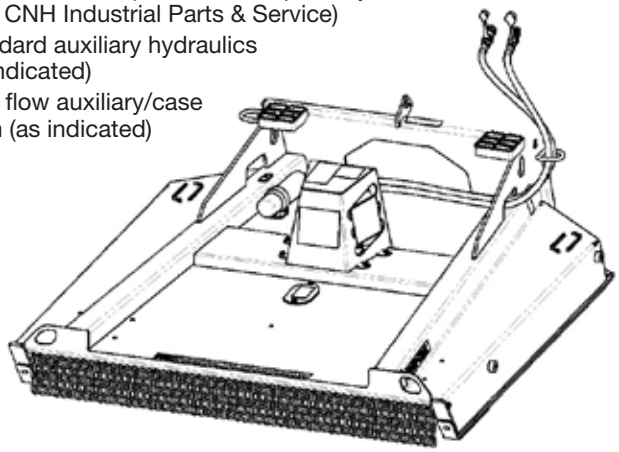

SILAGE DEFACER

SKID STEER LOADERS/COMPACT TRACK LOADERS

AUXILIARY BOOM HYDRAULICS REQUIRED – REAR COUNTERWEIGHTS RECOMMENDED	PART NUMBER	WEIGHT LB
SILAGE DEFACER	87045463	940

MODEL COMPATIBILITY	L213 L215 L216	L218	L220 L221	L223	L225 L228	L230 L234		C227		C232 C234 C237 C238 C245	REQ'D EQUIPMENT					
	L150	L160 L170	L175	L180	L185	L190	C175		C185 C190		STD FLOW	HIGH FLOW	CASE DRAIN	MFH	DEMO DOOR	2ND AUX
SILAGE DEFACER		•	•	•	•	•	•	•	•	•	R					

FEATURES

- 3-position, extendable frame
- Working heights up to 19 ft., depending on loader lift height, loader capacity and frame position
- Inverted auger style cutter loosens haylage and silage from tightly compacted bunker silos
- Maintains smooth compacted bunker face for reduced spoilage and improved palatability
- Does not reduce haylage stem length for optimum digestibility yielding higher milk production
- Open frame design allows the operator to see the bunker face
- 96" full width cut and inboard mounted drive motor allows defacer to operate closer to bunker walls
- Frame stands protect rotor when running or parked
- Cutter made from abrasion-resistant steel for long life
- Enclosed #80H chain drive with simple chain tension adjustment
- For skid-steers with 15-25 gpm hydraulic flow

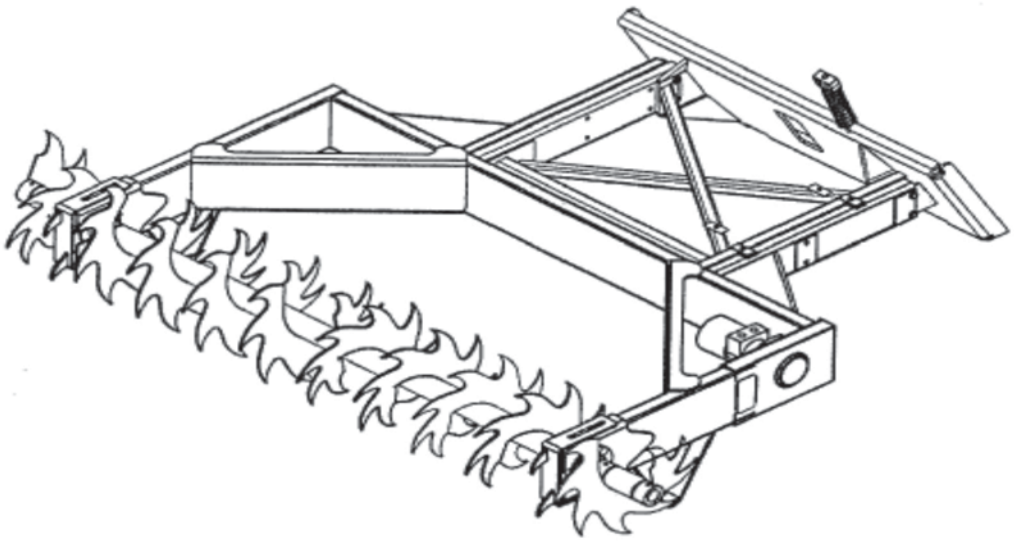

SILT FENCE INSTALLER

SKID STEER LOADERS/COMPACT TRACK LOADERS

	PART NUMBER	WEIGHT LB
Silt Fence Installer with integrated skid-steer	87596129	840
Silt Fence Installer with 3-point mount (must order 87596137 for skid-steer operation)	87596130	825
Silt Fence Installer with 3 point mount and 72" sliding offset hitch (must order 87596137 for skid-steer operation)	87596131	1260
Silt Fence Installer with 3 point mount and 84" sliding offset hitch (must order 87596137 for skid-steer operation)	87596132	1315

COMPLETING PACKAGES (Order as Needed)

Skid-steer adapter bracket for 3-point mount models used on skid-steers	87596137	255
Hydraulic top link kit for 3-point mount models used on tractors	87596138	35

MODEL COMPATIBILITY	L213	L215 L216	L218	L220 L221	L223	L225 L228	L230 L234		C227		C232 C234 C237 C238 C245	REQ'D EQUIPMENT					
		L150	L160 L170	L175	L180	L185	L190	C175		C185 C190		STD FLOW	HIGH FLOW	CASE DRAIN	MFH	DEMO DOOR	2ND AUX
SILT FENCE INSTALLER – SSL	•	•	•	•	•	•	•	•	•	•	•						
SILT FENCE INSTALLER – 3-PT HITCH		•	•	•	•	•	•	•	•	•	•						
SILT FENCE INSTALLER – 3-PT HITCH 72" OFFSET					•	•	•		•	•	•						
SILT FENCE INSTALLER – 3-PT HITCH 84" OFFSET					•	•	•		•	•	•						

FEATURES

- Simple, economical, efficient silt fence installation
- Install 36", 42" or 48" standard fence
- Place fence up to 20" depth
- Skid-steer or 3-point models (skid-steer adapter available for 3-point models)
- Spring-loaded coulter cuts through trash, roots and sod
- Static blade, no hydraulics required

APPLICATIONS

- Install silt fence around job sites

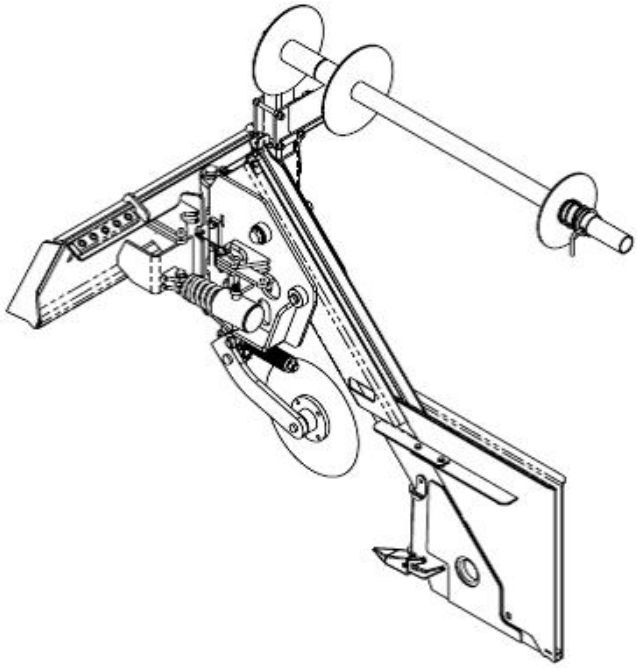

SKID HOE

SKID STEER LOADERS/COMPACT TRACK LOADERS

Unit includes mounting bracket, boom, cylinder, bucket linkage, hoses and quick disconnects. Must order bucket for complete unit.

AUXILIARY BOOM HYDRAULICS REQUIRED (See note below for additional requirements)	PART NUMBER	WEIGHT LB
SKID HOE	87487655	305

IMPORTANT:

This attachment requires base end bucket circuit port relief valve to be installed in loader control valve. Order seperately from NH parts. Order NH part no. 86529091 for all Eaton valve equipped units (Lx models plus LS140, LS150, LS160, LS170, LS180, LS190, L140, L150 and manual control L160, L170, L175). Order NH part no. 87445939 for Husco valve equipped units, (LS180.B, LS185.B, LS190.B and early production manual control L180, L185, L190). Later production L180, L185, L190 manual control machines have port relief valves included. All pilot controlled L160 and larger plus track models (LT and C) and all 200 series have had factory installed port relief valves since first production. Confirm port relief valve installation before operating this attachment.

ADDITIONAL EQUIPMENT (Must order bucket for complete unit)

	PART NUMBER	WEIGHT LB
10" Bucket (.9 ft³)	86547428	72
12" Bucket (1.2 ft³)	86547429	76
16" Bucket (1.9 ft³)	86547430	89
18" Bucket (2.1 ft³)	86547431	95
24" Bucket (3.1 ft³)	86547432	115

OPTIONAL EQUIPMENT

RIGID THUMB ATTACHMENT - factory installed	87487657	70
RIGID THUMB ATTACHMENT - field installed	87487658	90

MODEL COMPATIBILITY	L213 L215 L216	L218	L220 L221	L223	L225 L170 L175	L230 L234		C227		C232 C234 C237 C238 C245	REQ'D EQUIPMENT					
	L150	L160 L170	L175	L180	L185	L190	C175		C185 C190		STD FLOW	HIGH FLOW	CASE DRAIN	MFH	DEMO DOOR	2ND AUX
SKID HOE	•	•	•	•	•	•	•	•	•	•	R					

FEATURES

- Digs trenches up to 6 ft. deep with a skid steer
- Provides excellent mobility for digging footings
- Does not require stabilizers
- 2-1/4" x 18-1/4" cylinder provides up to 3,895 lb. breakout force
- Buckets common with 408/485 backhoes
- Thumb ready – factory or field installed

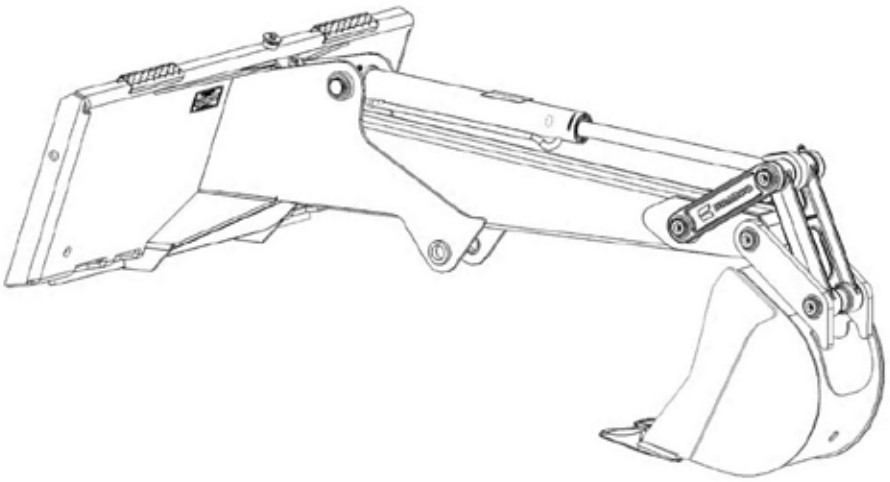

APPLICATIONS

- Excellent for digging trenches or footings

SNOW BLADE – STANDARD DUTY

SKID STEER LOADERS/COMPACT TRACK LOADERS

Unit includes mounting bracket, steel cutting edge, hydraulic angling, hoses and quick couplers.

STANDARD AUXILIARY BOOM HYDRAULICS REQUIRED	PART NUMBER	WEIGHT LB
SNOW BLADE, 60"	86635073	450
SNOW BLADE, 72"	86635074	475
SNOW BLADE, 84"	86635075	500

OPTIONAL COMPONENTS (Order as needed)

Replacement Steel Edge Kit, 60"	47937193	82
Replacement Steel Edge Kit, 72"	47937194	88
Replacement Steel Edge Kit, 84"	47937195	95
Rubber Edge Kit, 60"	47937196	92
Rubber Edge Kit, 72"	47937197	100
Rubber Edge Kit, 84"	47937198	109

MODEL COMPATIBILITY	L213 L215 L216		L218	L220 L221	L223	L225 L228	L230 L234		C227		C232 C234 C237 C238 C245	REQ'D EQUIPMENT					
	L150	L160 L170		L175	L180	L185	L190	C175		C185 C190		STD FLOW	HIGH FLOW	CASE DRAIN	MFH	DEMO DOOR	2ND AUX
60" SNOW BLADE	•	•										R					
72" SNOW BLADE	•	•	•	•	•							R					
84" SNOW BLADE		•	•	•	•			•				R					

FEATURES

- Adjustable skid shoes
- Spring loaded trip protection
- Blade angle 30° maximum
- Reversible, replaceable edge
- Flat face hydraulic quick disconnects included
- Hydraulic hoses included
- 21.5" blade height
- 7 gauge reinforced moldboard
- Optional rubber edge (1½" X 8")
- Locking bolts for light dozer applications

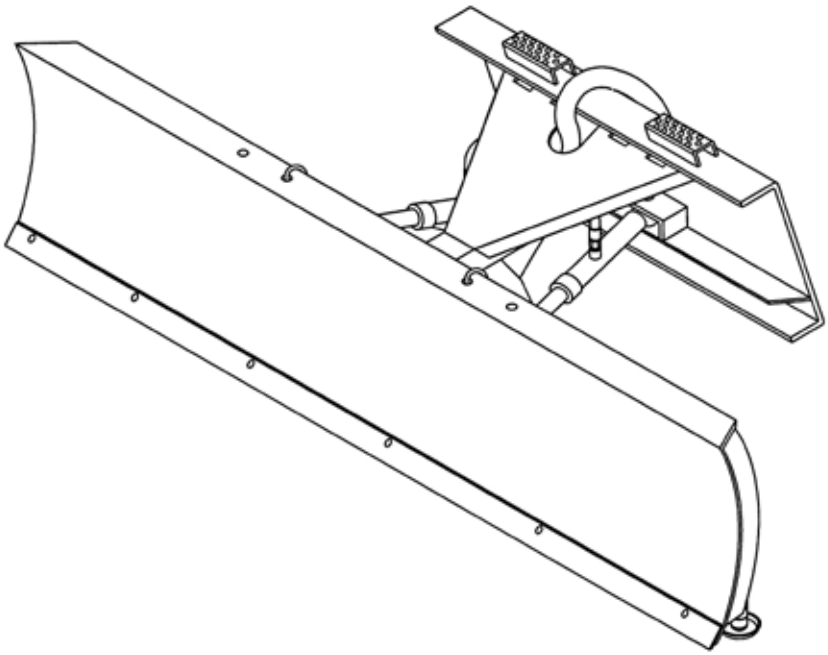

APPLICATIONS

- Snow removal
- Light dozing

REQUIREMENTS FOR OPERATION

- Standard auxiliary hydraulics

SNOW BLADE – HEAVY DUTY

SKID STEER LOADERS/COMPACT TRACK LOADERS

Unit includes mounting bracket, hydraulic angling, hoses and quick couplers.

	PART NUMBER	WEIGHT LB
SNOW BLADE, 84", w/steel cutting edge	86635076	1135
SNOW BLADE, 96", w/steel cutting edge	86635077	1172
SNOW BLADE, 108", w/steel cutting edge	86635078	1240
SNOW BLADE, 84", w/rubber cutting edge	86635079	1140
SNOW BLADE, 96", w/rubber cutting edge	86635080	1175
SNOW BLADE, 108", w/rubber cutting edge	86635081	1250

OPTIONAL COMPONENTS (Order as needed)

Steel Edge Kit, 84"	47937199	160
Steel Edge Kit, 96"	47937200	176
Steel Edge Kit, 108"	47937201	192
Rubber Edge Kit, 84"	47937204	123
Rubber Edge Kit, 96"	47937205	134
Rubber Edge Kit, 108"	47937206	145
Polyurethane Edge Kit, 84"	47937208	60
Polyurethane Edge Kit, 96"	47937209	65
Polyurethane Edge Kit, 108"	47937210	70
Top Deflector Kit, 84"	47531764	62
Top Deflector Kit, 96"	47531766	64
Top Deflector Kit, 108"	47531767	66
Hyd. Cushion Valve Kit (Protects against damage to angle cylinders)	47941457	10

MODEL COMPATIBILITY	L213 L215 L216	L218	L220 L221	L223	L225 L228	L230 L234		C227		C232 C234 C237 C238 C245	REQ'D EQUIPMENT					
	L150	L160 L170	L175	L180	L185	L190	C175		C185 C190		STD FLOW	HIGH FLOW	CASE DRAIN	MFH	DEMO DOOR	2ND AUX
84" SNOW BLADE		•	•	•	•	•	•	•		•	R					
96" SNOW BLADE		•	•	•	•	•	•	•	•	•	R					
108" SNOW BLADE				•	•	•		•	•	•	R					

FEATURES

- Adjustable skid shoes
- Spring loaded trip protection
- Flat face hydraulic quick disconnects included
- Hydraulic hoses included
- 35 degree hydraulic angle in either direction
- 31.75" blade height
- 10 gauge reinforced moldboard
- Available with factory-installed steel or rubber cutting edge
- Optional polyurethane edge (1" X 6")
- Optional 2-ply rubber snow deflector (.25 X 10")
- Optional hydraulic cushion valve

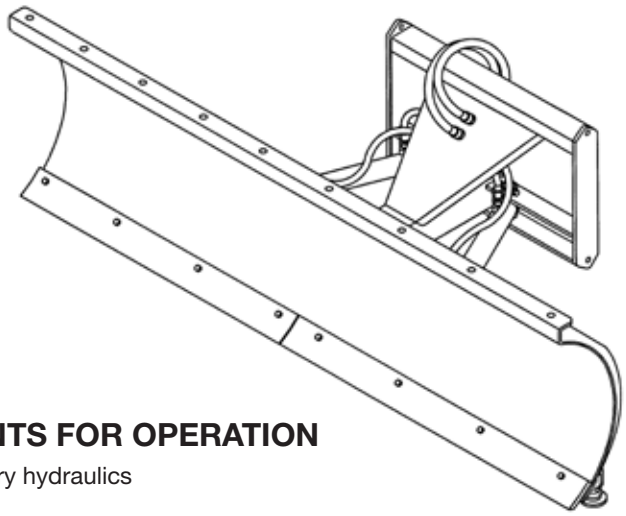

APPLICATIONS

- Snow removal

REQUIREMENTS FOR OPERATION

- Standard auxiliary hydraulics

SNOW BLADE/PUSHER (HYDRAULIC)

SKID STEER LOADERS/COMPACT TRACK LOADERS

Unit includes hoses and quick disconnects.

	PART NUMBER	WEIGHT LB
SNOW BLADE/PUSHER – 120"	51533043	1720
SNOW BLADE/PUSHER – 132"	51533045	1780
SNOW BLADE/PUSHER – 144"	51533046	1855
SNOW BLADE/PUSHER – 156"	51533047	1915

ELECTRIC CONTROL (Must select one for complete unit)

ELECTRIC CONTROL ADAPTER (Use with units equipped with Multi-Function control, 14-pin boom connector)	51533076	1
UNIVERSAL ELECTRIC CONTROL (Use with units not equipped with Multi-Function control kit)	51535628	3

MODEL COMPATIBILITY	L213 L215 L216	L218	L220 L221	L223 L225	L228 L230 L234	C227	C232 C234 C237 C238 C245	REQ'D EQUIPMENT					
	L150	L160 L170	L175	L180 L185	L190	C175	C185 C190	STD FLOW	HIGH FLOW	CASE DRAIN	MFH	DEMO DOOR	2ND AUX
SNOW BLADE/PUSHER – 120"		•	•	•	•	•	•	R			O		
SNOW BLADE/PUSHER – 132"			•	•	•	•	•	R			O		
SNOW BLADE/PUSHER – 144"				•	•		•	R			O		
SNOW BLADE/PUSHER – 156"					•		•	R			O		

FEATURES

- Independent angling of each wing allows for infinite wing/blade angle configurations
- Floating frame link maintains full blade contact when wings are angled, while also allowing down pressure when the wings are straight
- Side-to-side oscillation and adjustable cast skid shoes allows edge to follow uneven surfaces
- Hydraulic crossover relief valve absorbs shock to ensure longevity of attachment
- Trip edge design featuring four main edge compression springs with two additional compression springs on each wing
- 2" bore, 8-3/8" stroke cylinders with 1-1/4" rods and 1-1/4" cylinder pins
- 1-9/16" diameter pivot pins, 2-1/4" diameter oscillation pin
- Center section comes standard with 5/8" x 8" reversible, replaceable bolt-on edge designed for 5-1/2" total wear
- Replacement and wear parts supported in CNH depot
- 1-year standard product warranty through CNH Industrial

APPLICATIONS

- Variable pusher, straight and angled positions allow optimal snow removal

REQUIREMENTS FOR OPERATION

- Standard auxiliary hydraulics
- Multi-function control kit installed on loader or complete electrical control package

Snow Blade/Pusher – Hydraulic (Continued next page)

SNOW BLADE/PUSHER (HYDRAULIC)

SKID STEER LOADERS/COMPACT TRACK LOADERS

SPECIFICATIONS				
	120"	**132"**	**144"**	**156"**
Overall width	124-1/2" (3162 mm)	136-1/2" (3467 mm)	148-1/2" (3772 mm)	160-1/2" (4077 mm)
Moldboard width	62" (1575 mm)	74" (1880 mm)	86" (2184 mm)	98" (2489 mm)
Blade height	31" (787 mm)			
Blade angle	±30°			
Wing angle	+60° (forward only)			
Width at full angle, both wings open	110" (2794 mm)	120-1/2" (3061 mm)	131" (3327 mm)	141-1/2" (3594 mm)
Width at full angle, one wing open	86" (2184 mm)	96-1/2" (2451 mm)	107" (2718 mm)	117-1/2" (2985 mm)
Width at full scoop position	96-1/2" (2451 mm)	108-1/2" (2756 mm)	120-1/2" (3061 mm)	132-1/2" (3366 mm)
Moldboard thickness	0.19" (4.8 mm)			
Cutting edge	5/8" x 8" (16 mm x 203 mm) Bolt-on			
Wing cutting edges	1/2" x 7-3/4" (12.7 mm x 197 mm) High tensile steel, Bolt-on			
Blade oscillation	±4°			
Float oscillation	±5°			
Operating weight	1590 lbs. (721 kg)	1650 lbs. (748 kg)	1710 lbs. (776 kg)	1770 lbs. (803 kg)

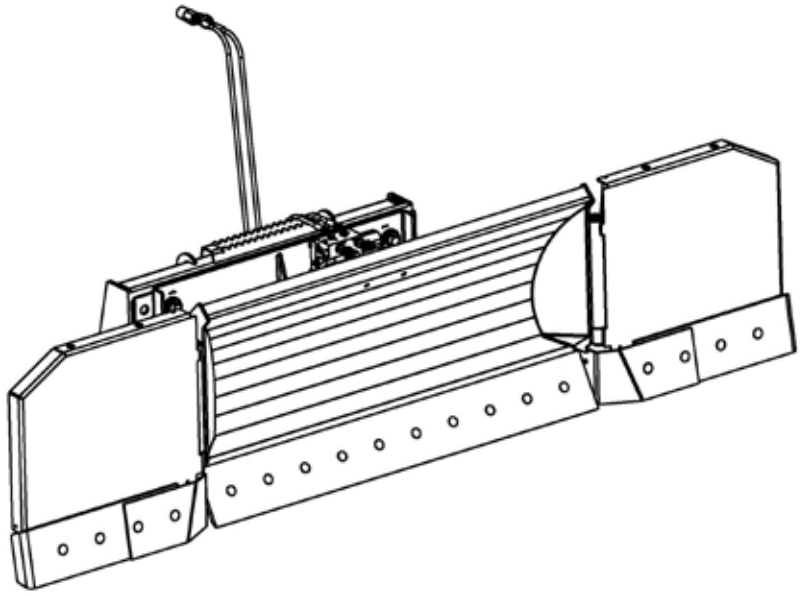

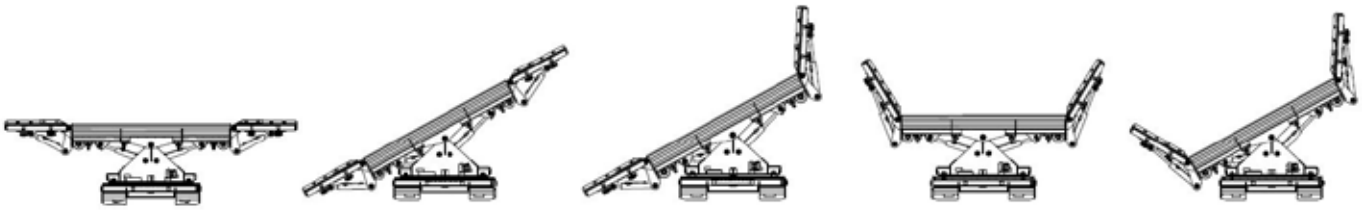

SNOW BLADE, TRIP EDGE

SKID STEER LOADERS/COMPACT TRACK LOADERS

Unit includes steel edge, hoses and quick disconnects.

STANDARD AUXILIARY BOOM HYDRAULICS REQUIRED	PART NUMBER	WEIGHT LB
TRIP EDGE SNOW BLADE, 84"	47531748	990
TRIP EDGE SNOW BLADE, 96"	47531749	1045
TRIP EDGE SNOW BLADE, 108"	47531750	1090

OPTIONAL EQUIPMENT (ORDER AS NEEDED)

RUBBER EDGE KIT, 84"	47531754	105
RUBBER EDGE KIT, 96"	47531755	115
RUBBER EDGE KIT, 108"	47531756	125
POLYURETHANE EDGE KIT, 84"	47937208	60
POLYURETHANE EDGE KIT, 96"	47937209	65
POLYURETHANE EDGE KIT, 108"	47937210	70
REPLACEMENT STEEL EDGE KIT, 84"	47531761	80
REPLACEMENT STEEL EDGE KIT, 96"	47531762	90
REPLACEMENT STEEL EDGE KIT, 108"	47531763	100
TOP DEFLECTOR KIT, 84"	47531764	62
TOP DEFLECTOR KIT, 96"	47531766	64
TOP DEFLECTOR KIT, 108"	47531767	66
MARKER KIT	84281638	5

MODEL COMPATIBILITY	L213 L215 L216	L218	L220 L221	L223	L225 L228	L230 L234		C227		C232 C234 C237 C238 C245	REQ'D EQUIPMENT					
	L150	L160 L170	L175	L180	L185	L190	C175		C185 C190		STD FLOW	HIGH FLOW	CASE DRAIN	MFH	DEMO DOOR	2ND AUX
84" SNOW BLADE	•	•	•	•	•	•	•	•			R					
96" SNOW BLADE		•	•	•	•	•	•	•	•	•	R					
108" SNOW BLADE				•	•	•		•	•	•	R					

FEATURES

- Standard 0.5" X 6" steel edge
- Hydraulic angle – 30° left and right
- Optional rubber edge (1.5" X 10")
- Optional polyurethane edge (1" X 6")
- Optional 2-ply rubber snow deflector (.25 X 10")
- High visibility yellow moldboard
- Cutting edge trip system
- Adjustable skid shoes

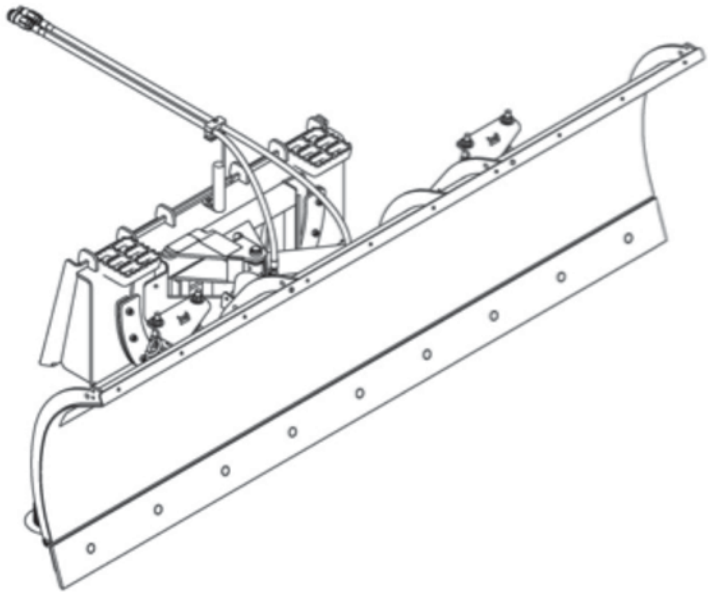

REQUIREMENTS FOR OPERATION

- Standard auxiliary hydraulics

SPECIFICATIONS			
Working Width (in.)	84	96	108
Operating Wt (lbs.)	940	990	1,030
Height (in.)	33.3	33.3	33.3
Depth (in.)	41.8	41.8	41.8
Max oscillation	±5°	±5°	±5°
Width @ 30° angle (in.)	72.6	83.0	93.4

SNOW BLOWER, HIGH FLOW

SKID STEER LOADERS/COMPACT TRACK LOADERS

Unit includes skid steer mounting bracket, wire harness to boom electrical connector, hoses and hydraulic couplers.

	PART NUMBER	WEIGHT LB
72" Snow Blower (F, 22-34 gpm)	84592481	1264
72" Snow Blower (G-Dual, 19-34 gpm)	84421421	1264
84" Snow Blower (F, 22-34 gpm)	84592483	1342
84" Snow Blower (G-Dual, 19-34 gpm)	84421422	1342
84" Snow Blower (H-Dual, 30-42 gpm)	84421423	1342
96" Snow Blower (G-Dual, 19-34 gpm)	84592484	1420
96" Snow Blower (H-Dual, 30 -42 gpm)	84421424	1420
84" SNOW BLOWER (G-Dual, EHF) Includes EHF harness. No optional wiring harness required.	47358360	1290
96" SNOW BLOWER (G-Dual, EHF) Includes EHF harness. No optional wiring harness required.	47358361	1370

OPTIONAL EQUIPMENT (Must order one electric kit for complete unit. Electric kit not required for EHF units.)

Electric Harness Adapter (14 pin round connector - all units with Multi-function Control Handle)	87023319	1
Universal Electrical Control Package. Controls chute rotation and deflector. Package includes magnetically mounted in-cab control box, boom wiring harness and wiring to battery. Connects to wiring harness supplied with blower. For machines without Multi-function Control kit.	87023320	5
Truck Loading Chute Kit	47981840	255

REPLACEMENT COMPONENTS (Order as needed.)

Replacement Steel Edge, 72"	47981833	36
Replacement Steel Edge, 84"	47981834	42
Replacement Steel Edge, 96"	47981836	48
Replacement Skid Shoe	47981838	15

MODEL COMPATIBILITY	L213 L215 L216	L218 L220 L221	L223		L225 L228			L230 L234		C227			C232 C237	C234 C238 C245	REQ'D EQUIPMENT						
	L150 L160	L170		L175		L180 L185	L190		C175		C185	C190			STD FLOW	HIGH FLOW	EHF	CASE DRAIN	MFH	DEMO DOOR	2ND AUX
72" Snow Blower (F, 22-34 gpm)		•	•	•	•				•	•						R			O		
72" Snow Blower (G-Dual, 19-34 gpm)		•	•	•	•	•		•	•	•						R			O		
84" Snow Blower (F, 22-34 gpm)		•	•	•	•				•	•						R			O		
84" Snow Blower (G-Dual, 19-34 gpm)		•	•	•	•	•		•	•	•	•		•	•		R			O		
84" Snow Blower (H-Dual, 30-42 gpm)			•		•	•	•	•		•	•	•	•	•		R			O		
96" Snow Blower (G-Dual, 19-34 gpm)						•		•			•		•	•		R			O		
96" Snow Blower (H-Dual, 30 -42 gpm)						•	•	•			•	•	•	•		R			O		
84" SNOW BLOWER (G-Dual, EHF)								•						•			R		R		
96" SNOW BLOWER (G-Dual, EHF)								•						•			R		R		

Snow Blowers, High Flow (Continued next page)

SNOW BLOWER, HIGH FLOW

SKID STEER LOADERS/COMPACT TRACK LOADERS

FEATURES

- Two-stage hydraulic blowers blow snow up to 45 ft.
- Direct drive motors eliminate moving parts and wear
- Electro-hydraulically controlled poly-lined chute and deflector
- Bolt-on replaceable wear edge, 1/2" x 4"
- 3/4" main drive hoses
- 5/8" supply hoses
- Adjustable skid shoes

REQUIREMENTS FOR OPERATION

- High flow hydraulics required.
  Enhanced High Flow (EHF) on specified units
- Multi-function Control kit installed on loader or complete electrical control package

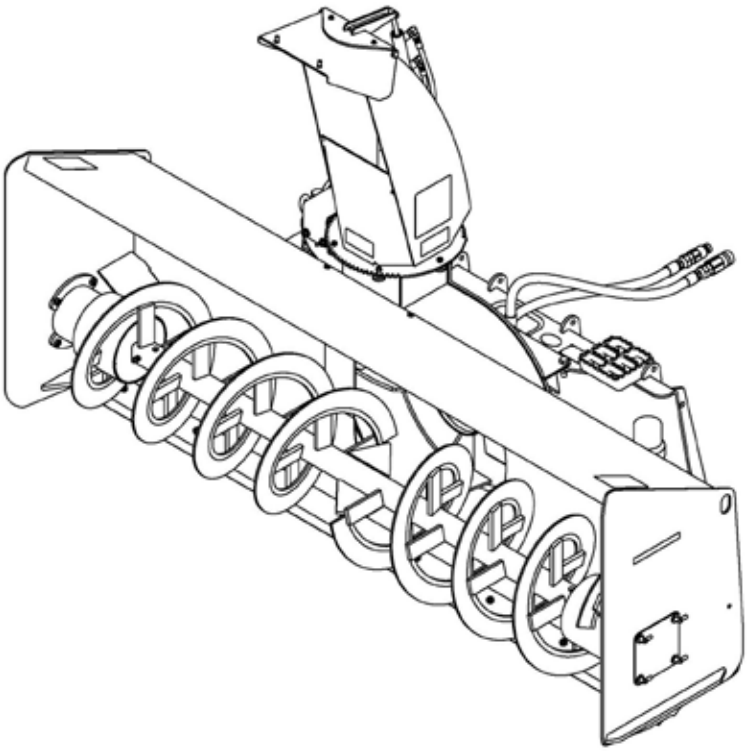

SPECIFICATIONS							
Model	**72F**	**72G**	**84F**	**84G**	**84H**	**96G**	**96H**
Cut Height (in.)	36	36	36	36	36	36	36
Flow Range (gpm)	22-34	19-34	22-34	19-34	30 - 42	19-34	30 - 42
Auger Drive	Single motor	Dual motor	Single motor	Dual motor	Dual motor	Dual motor	Dual motor
Auger Diameter (in.)	18	18	18	18	18	18	18
Fan Drive	Single motor	Single motor	Single motor	Single motor	Single motor	Single motor	Single motor
Fan Diameter (in.)	26	26	26	26	26	26	26
No. of fan blades	4	4	4	4	4	4	4

SNOW BLOWER, STANDARD FLOW

SKID STEER LOADERS/COMPACT TRACK LOADERS

Unit includes skid steer mounting bracket, wire harness to boom electrical connector, hoses and hydraulic couplers.

	PART NUMBER	WEIGHT LB
60" Snow Blower (C, 12-15 gpm)	84421425	866
60" Snow Blower (D, 14 - 21 gpm)	84421426	866
72" Snow Blower (D, 14 - 21 gpm)	84421427	924
72" Snow Blower (E, 18 - 27 gpm)	84421428	924
84" Snow Blower (E, 18 - 27 gpm)	84421429	985

COMPLETING PACKAGES (Must order one for complete unit)

Electric Harness Adapter (14 pin round connection)	87023319	1
Universal Electrical Control Package. Controls chute rotation and deflector. Package includes magnetically mounted in-cab control box, boom wiring harness and wiring to battery. Connects to wiring harness supplied with blower. For machines without Multi-function Electric Control Kit.	87023320	5
Conversion Harness - Required only to convert prior snow blowers to operate with new L200 MFH Control. For snow blowers (p/ns 87358172, 87358173, 87358175, 87358176) built prior to July 2009.	87326411	4

REPLACEMENT COMPONENTS (Order as needed.)

Replacement Steel Edge, 60"	47981829	17
Replacement Steel Edge, 72"	47981831	20
Replacement Steel Edge, 84"	47981832	23
Replacement Skid Shoe	47981838	15

MODEL COMPATIBILITY	L213 L215 L216	L150	L160 L170	L175	L218 L220	L221 L223	L180 L185	L225 L228 L230 L234	L190	C175	C227	C185 C190	C232 C234 C237 C238 C245	REQ'D EQUIPMENT					
														STD FLOW	HIGH FLOW	CASE DRAIN	MFH	DEMO DOOR	2ND AUX
60" Snow Blower (C, 12-15 gpm) - 84421425		•												R					
60" Snow Blower (D, 14 - 21 gpm) - 84421426	•		•											R			O		
72" Snow Blower (D, 14 - 21 gpm) - 84421427	•		•	•		•			•	•				R			O		
72" Snow Blower (E, 18 - 27 gpm) - 84421428					•		•				•			R			O		
84" Snow Blower (E, 18 - 27 gpm) - 84421429					•		•				•		•	R			O		

FEATURES

- Two-stage hydraulic blowers blow snow up to 35 ft.
- Excellent visibility
- Electro-hydraulically controlled poly-lined chute and deflector
- High volume 24-1/2" shroud opening with 14" diameter auger and 18" diameter fan
- Wear resistant steel edge 3/8" x 3"
- 12 gauge reinforced wrapper
- Adjustable skid shoes

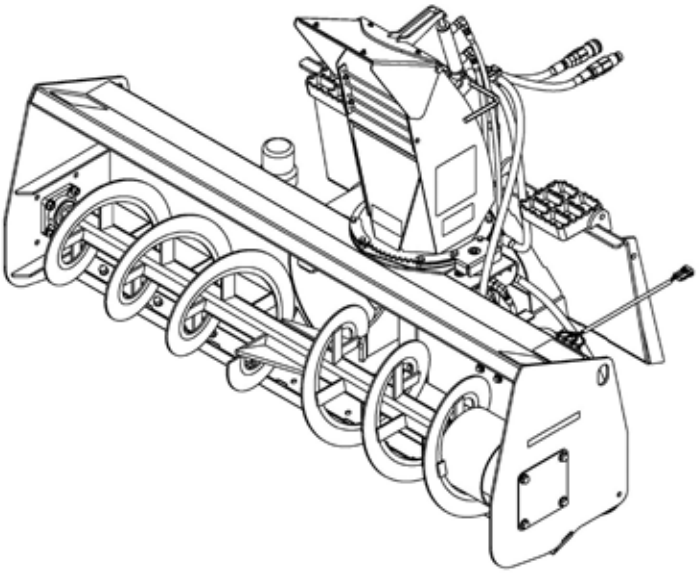

REQUIREMENTS FOR OPERATION

- Standard auxiliary hydraulics
- Multi-function Control Kit installed on loader or complete electrical control package

SNOW BUCKET

SKID STEER LOADERS/COMPACT TRACK LOADERS

	PART NUMBER	WEIGHT LB
84" Medium Duty Snow Bucket	87324175	725
96" Medium Duty Snow Bucket	87324176	775
96" Heavy Duty Snow Bucket	87324178	980
108" Heavy Duty Snow Bucket	87324179	1060

ADDITIONAL EQUIPMENT (Order as needed)

84" Bolt-on Cutting edge kit, (incl. reversible edge and hardware)	87324184	100
96" Bolt-on Cutting edge kit, reversible (incl. reversible edge and hardware)	87324185	110
108" Bolt-on cutting edge kit, reversible (incl. reversible edge and hardware)	87324186	125

MODEL COMPATIBILITY	L213 L215 L216	L218 L220	L221 L223	L225 L228	L230 L234		C227		C232 C234 C237 C238 C245	REQ'D EQUIPMENT					
	L150	L160 L170	L175	L180 L185	L190	C175		C185 C190		STD FLOW	HIGH FLOW	CASE DRAIN	MFH	DEMO DOOR	2ND AUX
84"Medium Duty Snow Bucket	•	•	•			•	•								
96" Medium Duty Snow Bucket		•	•			•	•								
96" Heavy Duty Snow Bucket			•	•	•	•	•	•	•						
108" Heavy Duty Snow Bucket				•	•			•	•						

FEATURES

- Move large volumes of snow or other loose material efficiently
- Cut out back plate for improved visibility
- Pre-drilled cutting edges for bolt on edge

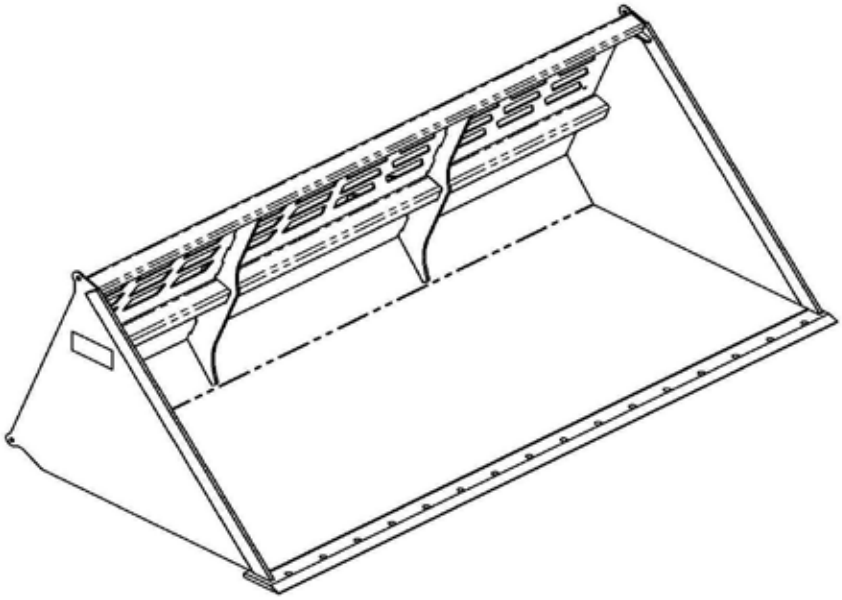

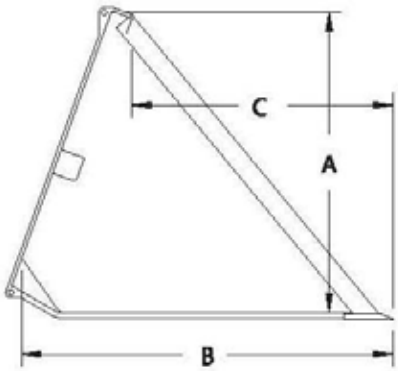

SPECIFICATIONS					
	Height A	Depth B	Leading Edge C	Struck Cap.	Heaped Cap.
84" Medium Duty	30"	42"	29.7"	1.14 yd^3	1.47 yd^3
96" Medium Duty	30"	42"	29.7"	1.31 yd^3	1.70 yd^3
96" Heavy Duty	38"	46"	32.5"	1.83 yd^3	2.36 yd^3
108" Heavy Duty	38"	46"	32.5"	2.07 yd^3	2.67 yd^3

SNOW PUSH

SKID STEER LOADERS/COMPACT TRACK LOADERS

	PART NUMBER	WEIGHT LB
SNOW PUSH - LOW PROFILE - 72"	47625937	605
SNOW PUSH - LOW PROFILE - 84"	47625938	670
SNOW PUSH - LOW PROFILE - 96"	47625939	735
SNOW PUSH - LOW PROFILE - 120"	47625940	865

OPTIONAL COMPONENTS – FACTORY INSTALLED (Order as needed)

PULL BACK KIT with rubber edge		
PULL BACK KIT - 72" LPP	47645845	185
PULL BACK KIT - 84" LP	47645846	215
PULL BACK KIT - 96" LP	47645847	245
PULL BACK KIT - 120" LP	47645848	300

OPTIONAL COMPONENTS – FIELD INSTALLED (Order as needed)

PULL BACK KIT without rubber edge		
PULL BACK KIT - 72" LP	47625945	155
PULL BACK KIT - 84" LP	47625946	175
PULL BACK KIT - 96" LP	47625947	200
PULL BACK KIT - 120" LP	47625948	250
RUBBER EDGE KIT (Use as replacement edge for base push or add-on for pullback kit)		
RUBBER EDGE KIT - 72" LP	47626032	90
RUBBER EDGE KIT - 84" LP	47626033	110
RUBBER EDGE KIT - 96" LP	47626034	125
RUBBER EDGE KIT - 120" LP	47626035	135

MODEL COMPATIBILITY	L213 L215 L216	L218	L220 L221	L223	L225 L228	L230 L234			C227		C232 C234 C237 C238 C245	REQ'D EQUIPMENT					
	L150	L160 L170	L175	L180		L185	L190	C175		C185 C190		STD FLOW	HIGH FLOW	CASE DRAIN	MFH	DEMO DOOR	2ND AUX
72" SNOW PUSH	•	•	•	•	•	•		•	•								
84" SNOW PUSH	•	•	•	•	•	•	•	•	•	•	•						
96" SNOW PUSH			•	•	•	•	•	•	•	•	•						
120" SNOW PUSH						•	•			•	•						

FEATURES

- Moves large volumes of snow efficiently
- Draws back snow from confined areas with optional pull back kit
- Reversible, 1" x 8" rubber edge on main blade
- Reversible, replaceable ¾" x 5" wear shoes of abrasion resistant AR400 steel

APPLICATIONS

- Snow, waste water, manure, feed lot and flood clean-up

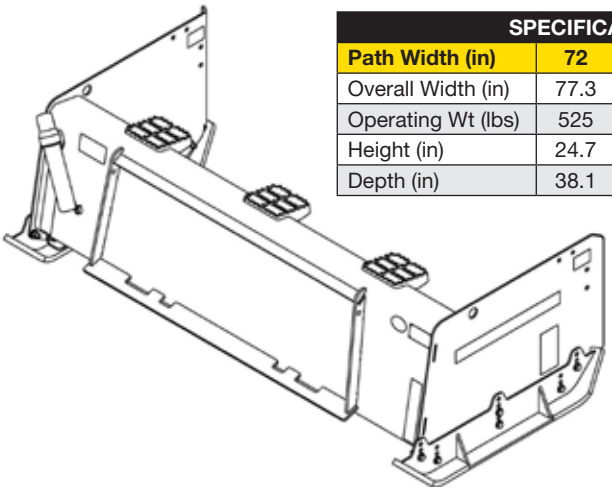

SPECIFICATIONS				
Path Width (in)	**72**	**84**	**96**	**120**
Overall Width (in)	77.3	89.3	101.3	125.3
Operating Wt (lbs)	525	570	610	705
Height (in)	24.7	24.7	24.7	24.7
Depth (in)	38.1	38.1	38.1	38.1

SNOW PUSH – SECTIONAL

SKID STEER LOADERS/COMPACT TRACK LOADERS

	PART NUMBER	WEIGHT LB
SECTIONAL SNOW PUSH – 8 FT.	48026410	1300
SECTIONAL SNOW PUSH – 10.5 FT.	48026411	1942

MODEL COMPATIBILITY	L213 L215 L216	L218 L220	L221 L223	L225 L228	L230 L234		C227	C232 C234 C237 C238 C245	REQ'D EQUIPMENT					
	L150	L160 L170 L175	L180	L185	L190	C175		C185 C190	STD FLOW	HIGH FLOW	CASE DRAIN	MFH	DEMO DOOR	2ND AUX
SECTIONAL SNOW PUSH – 8 FT.		•	•	•	•	•	•	•						
SECTIONAL SNOW PUSH – 10.5 FT.			•	•	•		•	•						

FEATURES

- Individual moldboard sections and articulating side panels move up and down independently to contour to the pavement, parking curbs and other obstacles, scraping cleanly down to the bare pavement on the first pass
- Interchangeable quick connect coupler mounting system
- Patented Slip-Hitch allows the entire pusher to move up and down independently of the machine pushing it, automatically self-leveling and perfectly adjusting the pusher to the pavement every time
- Individual moldboard sections and articulating side panels skip over curbs and other obstacles up to 9" in height to prevent operator injury and equipment damage
- Every part of the sectional pusher is removable, allowing just the damaged part or component to be replaced
- Hardox 450 hardened steel shoes and cutting edges

APPLICATIONS

- Snow and ice removal
- Moving waste water, manure and feed lot

SPECIFICATIONS		
Model	**LD-8**	**LD-10.5**
Overall Width – in (m)	96 (2.4)	126 (3.2)
Operating Wt – lbs (kg)	1,150 (522)	1,792 (813)
Height – in (mm)	32 (813)	
Depth – in (mm)	58 (1473)	
Number of sections	3	4

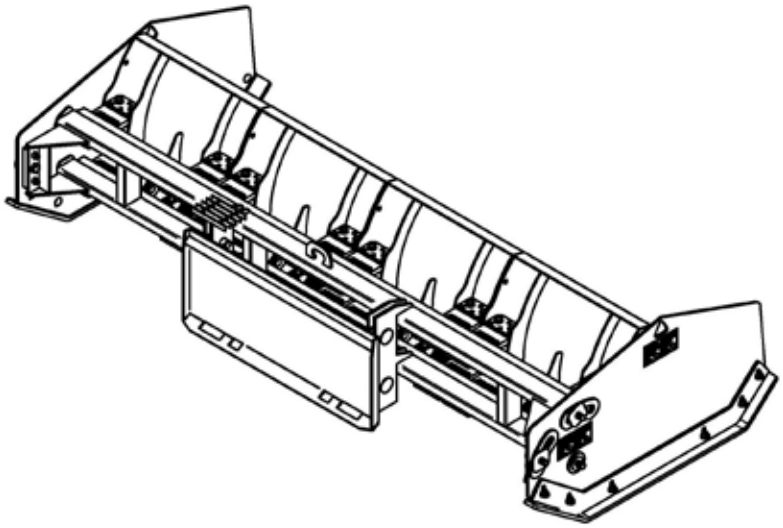

SNOW V-BLADE

SKID STEER LOADERS/COMPACT TRACK LOADERS

Unit includes hoses and quick disconnects.

	PART NUMBER	WEIGHT LB
SNOW V-BLADE – 72”	51556129	1220
SNOW V-BLADE – 84”	51556130	1280
SNOW V-BLADE – 96”	51556131	1350
SNOW V-BLADE – 108”	51556132	1425
SNOW V-BLADE – 120”	51556133	1485

OPTIONAL EQUIPMENT (Order as needed)

PIN-ON EXTENSION WING KIT - 12” wide wing extensions, angled 20° forward increase overall blade width by 21-3/4” (552mm)	51556166	145

MODEL COMPATIBILITY	L213 L215 L216	L218	L220 L221	L223 L225	L228 L230 L234	C227	C232 C234 C237 C238 C245	REQ’D EQUIPMENT					
	L150	L160 L170	L175	L180 L185	L190	C175	C185 C190	STD FLOW	HIGH FLOW	CASE DRAIN	MFH	DEMO DOOR	2ND AUX
SNOW V-BLADE – 72”	•	•						R					
SNOW V-BLADE – 84”	•	•	•	•	•	•		R					
SNOW V-BLADE – 96”		•	•	•	•	•	•	R					
SNOW V-BLADE – 108”			•	•	•	•	•	R					
SNOW V-BLADE – 120”				•	•		•	R					

FEATURES

- Variable V, scoop, straight and angled positions allow for optimal snow removal
- Floating frame link maintains full blade contact in scoop and V-positions while allowing full down pressure in straight and angled positions
- Oscillation and adjustable cast skid shoes allow edge to follow uneven surfaces
- Corrosion, dent, and flake resistant NitroSteel® cylinder rods made in the USA
- Trip edge containing four compression springs
- Reversible, replaceable bolt-on edges allow 5-1/2" (140mm) of total wear
- Optional pin-on wings kit includes two, 12" wide wings angled 20° forward from moldboard to increase the blade’s width by 21-3/4"
- Replacement and wear parts supported in CNH depot
- 1-year standard product warranty through CNH Industrial

APPLICATIONS

- Use the scoop position to push and pile snow, and the V-position to cut through the deepest piles and drifts

REQUIREMENTS FOR OPERATION

- Standard auxiliary hydraulics

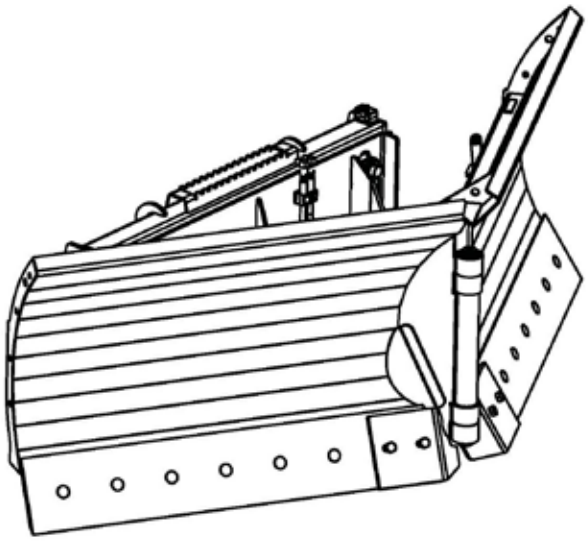

Snow V-Blade (Continued next page)

SNOW V-BLADE

SKID STEER LOADERS/COMPACT TRACK LOADERS

SPECIFICATIONS					
MODEL	**72" (1829 mm)**	**84" (2134 mm)**	**96" (2438 mm)**	**108" (2743 mm)**	**120" (3048 mm)**
Overall Blade Width	74" (1880 mm)	86" (2184 mm)	98" (2489 mm)	110" (2794 mm)	120" (3048 mm)
Blade Height	31" (787 mm)				
Blade Angle	±30°				
Width at Full Angle	64" (1626 mm)	74" (1880 mm)	84" (2134 mm)	95" (2413 mm)	104" (2642 mm)
Width at Full Scoop	60" (1524 mm)	70" (1778 mm)	81" (2057 mm)	92" (2337 mm)	101" (2565 mm)
Width at Full V	66" (1676 mm)	76" (1930 mm)	88" (2235 mm)	99" (2515 mm)	108" (2743 mm)
Moldboard Thickness	0.19" (4.8 mm)				
Cutting Edge	5/8" x 8" (16 mm x 203 mm) Bolt-on				
Center Edge	1/2" (12.7 mm) High Tensile Steel, Bolt-on				
Blade Oscillation	±4°				
Float Oscillation	±5°				
Operating Weight	1130 lbs (513 kg)	1190 lbs (540 kg)	1250 lbs (567 kg)	1310 lbs (594 kg)	1370 lbs (621 kg)

STUMP GRINDER

SKID STEER LOADERS/COMPACT TRACK LOADERS

Unit includes skid-steer mounting bracket, wire harness to boom electrical connector, hoses and hydraulic couplers.

ELECTRIC CONTROL KIT REQUIRED AND AUXILIARY HYDRAULICS AS NOTED	PART NUMBER	WEIGHT LB
STUMP GRINDER SG26 (requires standard flow boom hydraulics)	87050302	924
STUMP GRINDER SG30 (requires high flow boom hydraulics)	87050303	1029

Electrical control package (below) or Multi-function handle kit required (unless loader has been previously equipped)
See loader pages.

COMPLETING PACKAGES (Order as Needed)

Electrical control package, controls arm swing & depth. Package includes magnetically mounted, in-cab control box, boom wiring harness & wiring to battery. Connects to wiring harness supplied with stump grinder. For loaders not equipped with Multi-function Control kit.	87050304	15

MODEL COMPATIBILITY	L213	L215 L216	L218	L220 L221	L223	L225 L228	L230 L234		C227		C232 C234 C237 C238 C245	REQ'D EQUIPMENT					
	L150		L160 L170	L175	L180	L185	L190	C175		C185 C190		STD FLOW	HIGH FLOW	CASE DRAIN	MFH	DEMO DOOR	2ND AUX
STUMP GRINDER – STD FLOW (15-22)		•	•	•	•	•	•	•	•	•	•	R			O		
STUMP GRINDER – HIGH FLOW (25-42)			•	•	•	•	•	•	•	•	•		R	R	O		

SPECIFICATIONS	SG26 Standard Flow	SG30 High Flow
Overall Length	84 in.	84 in.
Overall Width	58 in.	58 in.
Overall Height	37 in.	37 in.
Weight (approx)	924 lb.	1,029 lb.
Wheel Diameter	26 in.	30 in.
Cutting Diameter	29 in.	33 in.
Number of Teeth	28	28
Flow Requirement	15-22 gpm	25-42 gpm
Max Pressure (continuous)	3000 psi	3000 psi
Wheel Speed	575-850 rpm	515-860 rpm
Lateral Sweep	60 degrees	60 degrees
Vertical Lift	43 degrees	43 degrees

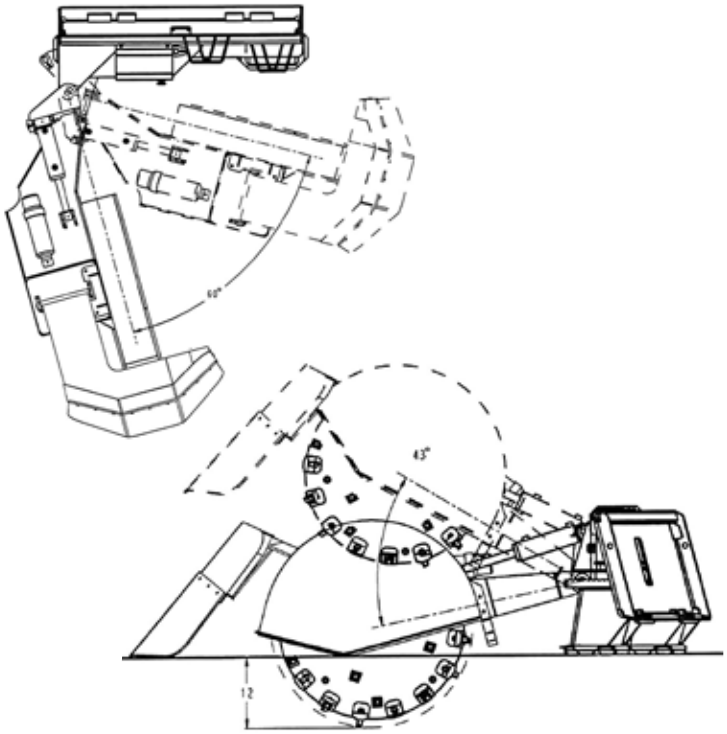

Stump Grinders (Continued next page)

STUMP GRINDER

SKID STEER LOADERS/COMPACT TRACK LOADERS

FEATURES

- Models available for standard flow and high flow skid-steers
- Grinds stumps up to 12 inches below ground level
- 60 degree range of motion covers 45 inches in a single sweep
- Chips thrown away from loader protects operator
- Floating guard contains chips and allows better control when grinding below grade
- Operation from inside loader with multi-function control kit
- Adjustable valve permits operator to fine tune control swing and lift speeds
- Hydraulic braking action on wheel for faster shut-down
- Offset mount swing arm provides excellent visibility of stump while grinding
- Frame-mounted grouser pads provide exceptional stability with minimal ground disturbance
- Greasable hardened steel pivot pins for low maintenance and long life
- Durable carbide-tipped tooth with single lock nut used in all locations on wheel for ease of maintenance
- Tooth arrangement permits cutting from side to side and vertical directions
- Long-lasting powder coat finish used throughout frame and structure
- Double wall construction on moveable front shield
- Proven heavy-duty gearbox drive with torque arm motor support for longer motor and drive system life
- Large wheel diameter for high cutting force
- Easy access to all drive system and moving components allows for quick maintenance

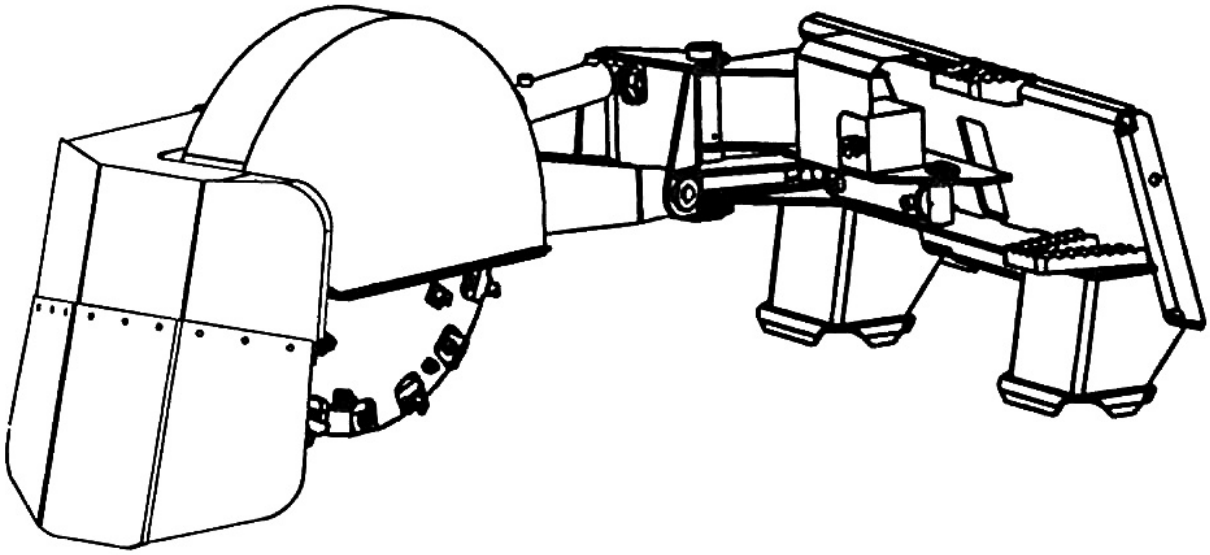

THREE-POINT HITCH

SKID STEER LOADERS/COMPACT TRACK LOADERS

	PART NUMBER	WEIGHT LB
Three Point Hitch Adapter	48145926	235

MODEL COMPATIBILITY	L213 L215 L216	L218 L220 L221	L223 L225 L228	L230 L234	C227	C232 C234 C237 C238 C245	REQ'D EQUIPMENT					
	L150	L160 L170 L175	L180 L185	L190	C175	C185 C190	STD FLOW	HIGH FLOW	CASE DRAIN	MFH	DEMO DOOR	2ND AUX
THREE POINT HITCH ADAPTER	•	•	•	•	•	•						

APPLICATIONS

- Attaches like regular bucket, allows hookup to Cat I or Cat II equipment
- Bottom two arms slide to allow quick and easy hookup and maximum versatility

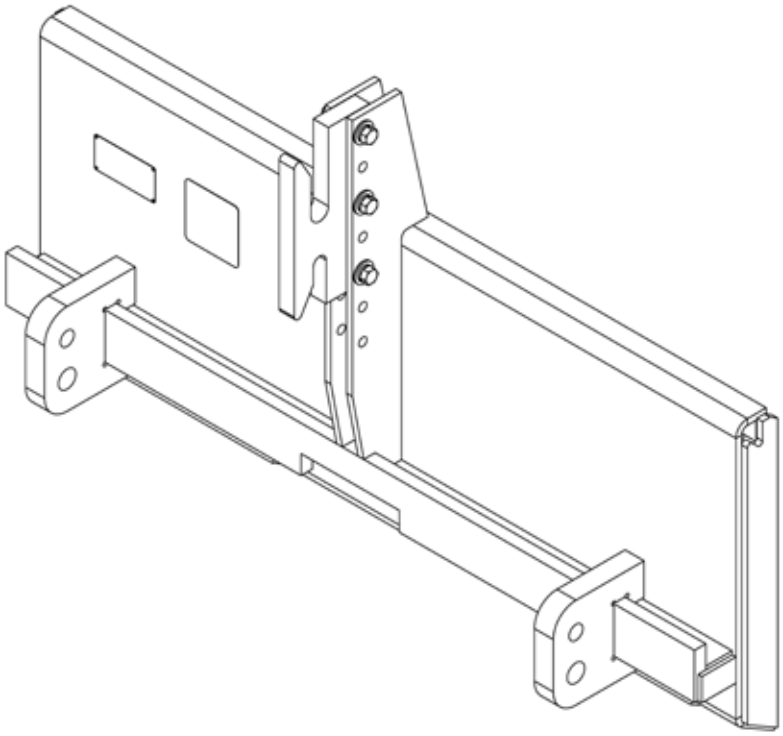

TILLER

SKID STEER LOADERS/COMPACT TRACK LOADERS

Unit includes hoses and quick disconnects.

	PART NUMBER	WEIGHT LB
HT52 - 52" Tiller (14-17 gpm)	84412543	880
HT52 - 52" Tiller (18-25 gpm)	87311521	880
HT66 - 66" Tiller (14-17 gpm)	84412544	1100
HT66 - 66" Tiller (18-25 gpm)	87311522	1100
HT66H - 66" Tiller HF (28-40 gpm)	87343214	1100
HT78H - 78" Tiller HF (28-40 gpm)	87343215	1370

ADDITIONAL COMPONENTS (Order as Needed)

Scarifier Kit for HT52	87311523	40
Scarifier Kit for HT66, HT66H	87311524	50
Scarifier Kit for HT78H	87343216	60

MODEL COMPATIBILITY	L213 L215 L216		L218 L220 L221	L223	L225 L228	L230 L234		C227		C232 C234 C237 C238 C245	REQ'D EQUIPMENT					
	L150	L160	L170 L175	L180	L185	L190	C175		C185 C190		STD FLOW	HIGH FLOW	CASE DRAIN	MFH	DEMO DOOR	2ND AUX
52" TILLER – STD FLOW (14-17)	•	•									R					
66" TILLER – STD FLOW (14-17)	•	•									R					
52" TILLER – STD FLOW (18-25)			•	•	•	•	•	•	•	•	R					
66" TILLER – STD FLOW (18-25)			•	•	•	•	•	•	•	•	R					
66" TILLER – HIGH FLOW (28-40)			•	•	•	•	•	•	•	•		R	R			
78" TILLER – HIGH FLOW (28-40)				•	•	•			•	•		R	R			

FEATURES

- Industry exclusive optional scarifiers pre-cut rough crust to improve tiller efficiency
- Front hood is heavily ribbed which levels till as a leveling blade
- Exclusive off-set hitch on 52" model allows tight cut next to obstacles
- Industry exclusive on 66" and 78" models with dual hitch both off-set and center mount
- Productivity is further improved with high torque efficient chain system and large frame to handle trash
- Easily adjusted chain tension with CAM lock
- Dual rotation with bi-directional tines standard
- Single wide skid-shoe protects drive and controls depth

SPECIFICATIONS				
	HT52	HT66	HT66H	HT78H
Working Width (in.)	52	66	66	78
Overall Width (inches)	67.8	81.8	81.8	94.8
Weight - approx. (lbs.)	730	950	950	1220
Cutting Depth (in.)	6	6	6	6
Number of Tines	24	32	32	40
Flow Requirement (gpm)	14-17 18 - 25	14-17 18 - 25	28-40	28-40

APPLICATIONS

- Use for jobsite leveling, soil mixing, seedbed preparation

REQUIREMENTS FOR OPERATION

- Standard auxiliary hydraulics (as indicated)
- High flow auxiliary hydraulics (as indicated)

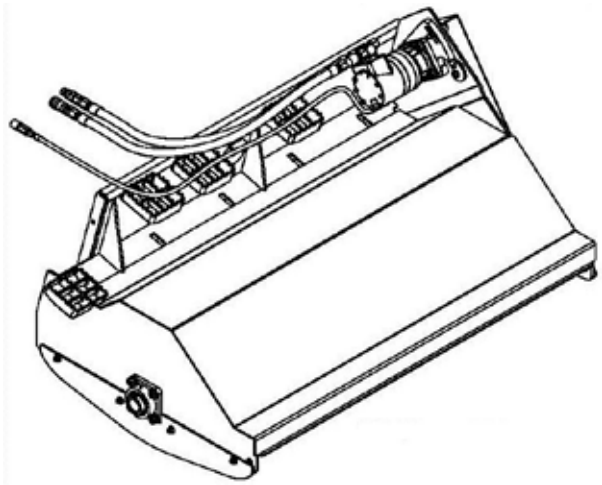

TILT-ATTACH

SKID STEER LOADERS/COMPACT TRACK LOADERS

Unit includes hoses and quick disconnects.

REQUIRES STANDARD AUXILIARY BOOM HYDRAULICS	PART NUMBER	WEIGHT LB
TILT-ATTACH - HEAVY DUTY Basic	87311559	400
TILT-ATTACH - HEAVY DUTY Diverter Valve	84257966	425

COMPLETING KITS (Must select one for Tilt-Attach with diverter valve)

UNIVERSAL CONTROL KIT - Includes wire harness, switchbox to be mounted in cab and connections for 12V power. For loaders not equipped with Multifunction Control Kit.	84257970	20
HARNESS ADAPTER - Includes adapter to connect to 14 pin boom harness. For loaders equipped with Multi-function Control Kit.	84257971	5

MODEL COMPATIBILITY	L213 L215 L216		L218 L220 L221	L223	L225 L228	L230 L234		C227		C232 C234 C237 C238 C245	REQ'D EQUIPMENT					
	L150	L160 L170	L175	L180	L185	L190	C175		C185 C190		STD FLOW	HIGH FLOW	CASE DRAIN	MFH	DEMO DOOR	2ND AUX
TILT-ATTACH - HD BASIC	•	•	•	•	•	•	•	•	•	•	R					O
HD TILT-ATTACH - DIVERTER VALVE			•	•	•	•	•	•	•	•	R			O		

FEATURES

- Independently control attachment angle relative to loader
- Excellent tool for precision grading and contouring
- Mounts between loader and attachment
- Basic model for use with attachments not requiring auxiliary hydraulics or loader must be equipped with 2nd auxiliary function
- Diverter valve model may be used with most standard flow hydraulic attachments

REQUIREMENTS FOR OPERATION

- Standard auxiliary hydraulics
- 2 auxiliary for Basic models if used with hydraulic attachments
- Multi-function Control Kit or Universal Control Kit for diverter valve model if used with hydraulic attachments

SPECIFICATIONS	
	Heavy Duty
Rotation	+/- 18°
Cylinder Bore	2.50"
Cylinder Rod Diameter	1.25"
Cylinder Stroke	3.0"
Attachment Offset	5.4"

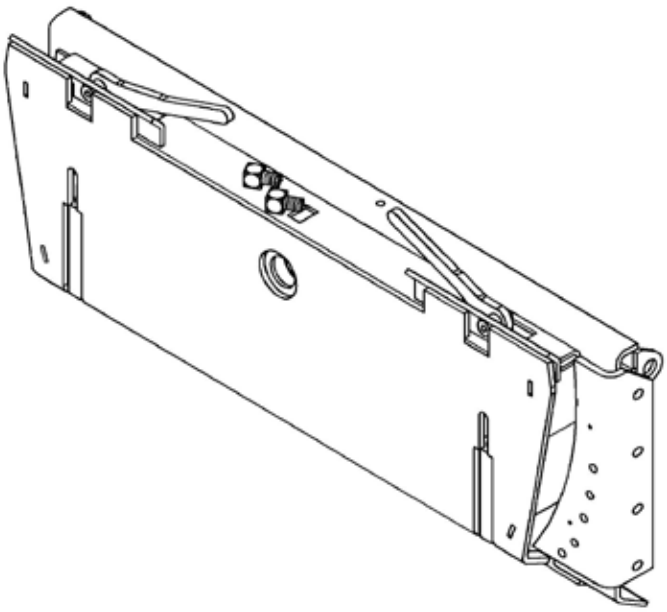

TRACKS, STEEL

SKID STEER LOADERS/COMPACT TRACK LOADERS

Track sets include tracks, hardware and ratchet/strap installation tool.
Order wheel spacer kits separately as specified.

	PART NUMBER	WEIGHT LB
F-Series Cast Tracks for 27/10.50 x 15 tires	84406432	840
F-Series Cast Tracks for 10.00 x 16.5 tires	87324790	818
F-Series Cast Tracks for 10.00 x 16.5 tires	87324799	969
F-Series Cast Tracks for 12.00 x 16.5 tires	87324800	1018
F-Series Cast Tracks for 12.00 x 16.5 tires	87324802	1072
F-Series Cast Tracks for 12.00 x 16.5 tires	87324792	1022
F-Series Cast Tracks for 12.00 x 16.5 tires	87324807	1125

Tracks are not compatible with semi-pneumatic, liquid filled, foam filled or any non-pneumatic tires.

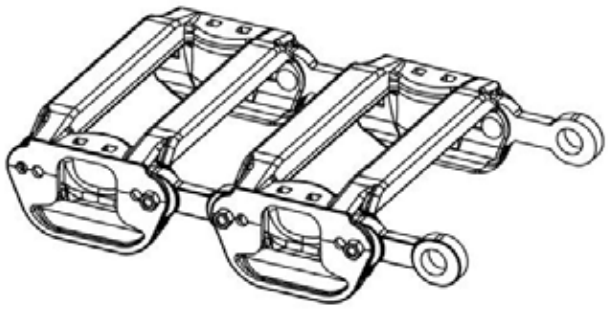

ADDITIONAL COMPONENTS (Order as Needed)

Wheel Spacer Kit - 1-1/2" (9/16-18) L150	9862462	45
Wheel Spacer Kit - 1-1/2" (9/16-18)	9862464	67
Wheel Spacer Kit - 2" (9/16-18)	86576810	84
Wheel Spacer Kit - 1-1/2" (M16)	84426158	70
Wheel Spacer Kit - 2" (M16)	84426159	84

MODEL COMPATIBILITY	L213 L215 L216			L218 L220 L221		L160 L170	L175		L223 L225 L228 L230 L234		L180 L185	L190	
			L150										
	10.00X16.5	27/10.50X15	10.00X16.5	10.00X16.5	12.00X16.5	10.00X16.5	10.00X16.5	12.00X16.5	12.00X16.5	14x17.5	12.00X16.5	12.00X16.5	14x17.5
84406432		•											
87324790			•										
87324799				•		•	•						
87324800					•								
87324792											•		
87324807									•			•	
WHEEL SPACERS													
9862462 – 1-1/2" (6X6 hub) 9/16-18			•										
9862464 – 1-1/2" 9/16-18						•	•						
86576810 – 2" 9/16-18											•	•	
84426158 – 1-1/2" Spacer kit - M16					•								
84426159 – 2" Spacer kit - M16				•					•*				

*Minimal clearance to boom with 50 mm stops.

TREE PULLER

SKID STEER LOADERS/COMPACT TRACK LOADERS

Unit includes hose and quick disconnects.

	PART NUMBER	WEIGHT LB
TREE PULLER	51495994	515

MODEL COMPATIBILITY	L213 L215 L216	L218	L220 L221	L223 L225 L228	L230 L234	C227		C232 C234 C237 C238 C245	REQ'D EQUIPMENT					
	L150	L16	L170 L175	L180 L185	L190	C175	C185 C190		STD FLOW	HIGH FLOW	CASE DRAIN	MFH	DEMO DOOR	2ND AUX
TREE PULLER	•	•	•	•	•	•	•	•	R					

FEATURES

- Serrated jaw teeth are made from 1/2" Grade 80 laser cut steel; additionally, every other tooth is gusseted to provide rigidity
- Hard stop at tip keeps small space between teeth when fully closed, allowing even small trees to be pulled without shearing them off
- 11-1/2" (292 mm) max. jaw opening
- Shake out excess dirt for refilling holes
- Single hydraulic cylinder guarded from debris and other objects
- Corrosion, dent and flake resistant NitroSteel® cylinder rod made in the USA
- Maximum size of tree that can be removed will vary greatly depending on the size of the loader, type of tree and ground conditions
- Replacement and wear parts supported in CNH depot
- 1-year standard product warranty through CNH Industrial

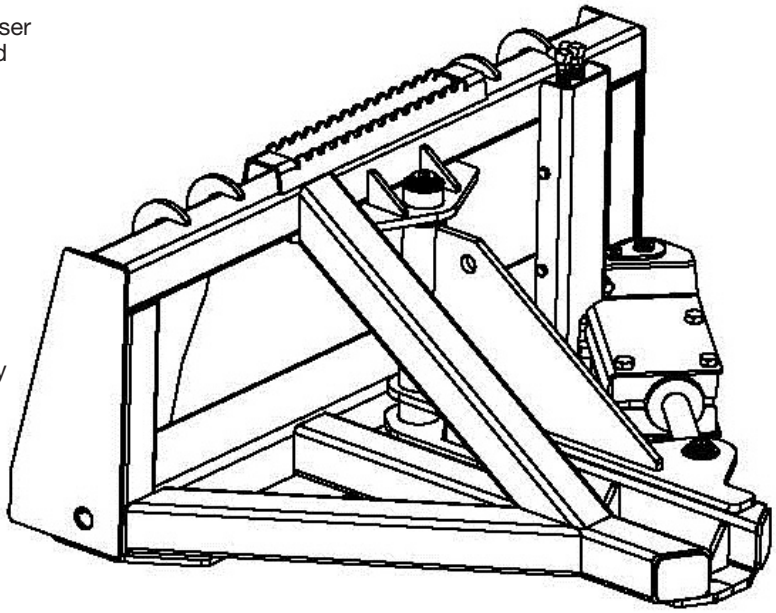

APPLICATIONS

- Pull out entire trees, wood and metal fence posts, stumps and roots

REQUIREMENTS FOR OPERATION

- Standard auxiliary hydraulics

TREE SHOVEL

SKID STEER LOADERS/COMPACT TRACK LOADERS

	PART NUMBER	WEIGHT LB
TREE SHOVEL, 36"	9863126	258
TREE SHOVEL, 42"	9863127	360
TREE SHOVEL, 48"	9863128	400

MODEL COMPATIBILITY	L213 L215 L216	L218	L220 L221	L223	L225 L228	L230 L234		C227		C232 C234 C237 C238 C245	REQ'D EQUIPMENT					
	L150	L160 L170	L175	L180	L185	L190	C175		C185 C190		STD FLOW	HIGH FLOW	CASE DRAIN	MFH	DEMO DOOR	2ND AUX
36" TREE SHOVEL	•	•	•	•	•	•	•	•	•	•						
42" TREE SHOVEL,	•	•	•	•	•	•	•	•	•	•						
48" TREE SHOVEL,	•	•	•	•	•	•	•	•	•	•						

FEATURES

- Dig holes for incoming trees
- Transplant trees and shrubbery
- Transport/load prepackaged trees
- Place large decorative stones easily
- Constructed of 3/8" plate with sharp tapered edge

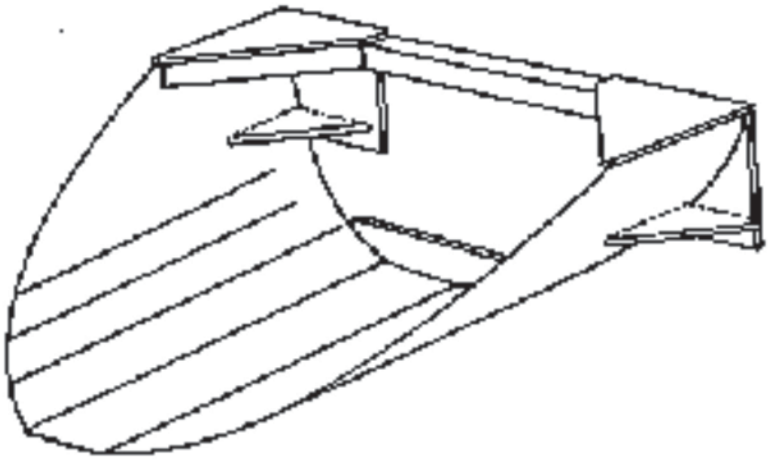

TREE SPADE

SKID STEER LOADERS/COMPACT TRACK LOADERS

For specified skid-steer loaders equipped with standard auxiliary boom hydraulics. Includes complete spade with standard control harness, hoses, fittings and quick couplers. Standard control harness requires multi-function control kit on skid-steer loader.

REAR STABILIZERS RECOMMENDED.*	PART NUMBER	WEIGHT LB
Internal Frame, 25° Blade Angle, Truncated Spades		
2625 Tree Spade	87050400	1150
3625 Tree Spade	87050401	1640
4425 Tree Spade	87050402	1875

*See "Rear Stabilizer" pages for rear stabilizer options.

OPTIONAL CONTROL PACKAGES

Complete Control Package - Includes magnetically mounted in-cab controls, wiring harnesses to tree spade connector and battery. Required for skid-steer loaders not equipped with Multi-function Control Kit.	87050392	15

MODEL COMPATIBILITY	L213 L215 L216		L218	L220 L221	L223	L225 L228		L230 L234		C227		C232 C234 C237 C238 C245	REQ'D EQUIPMENT					
	L150	L160	L170	L175			L180 L185	L190	C175		C185 C190		STD FLOW	HIGH FLOW	CASE DRAIN	MFH	DEMO DOOR	2ND AUX
2625 TREE SPADE		•	•	•	•	•	•	•	•	•	•	•	R			O		
3625 TREE SPADE						•	•	•			•	•	R			O		
4425 TREE SPADE							•	•			•	•	R			O		

SPECIFICATIONS			
DESCRIPTION	**2625**	**3625**	**4425**
Ball Diameter (inches)	18-26	24-36	36-44
Optional Ball Diameter (inches)	—	—	—
Tree Diameter (inches)	1.5 - 2.5	2.0 - 3.5	3.0 - 4.5
Ball weight (lbs.)	150 - 300	250 - 1,000	1,200 - 1,400
Spade weight (lbs.)	1,100	1,500	1,825
Blade Style & Angle	25° Mod. Truncated	25° Mod. Truncated	25° Mod. Truncated
Under Cutter	No	No	No
Frame Style	Internal	Internal	Internal
Number of Blades	3	3	4
DIMENSIONS			
Width (inches)	54	66	63
Width - Gate Open (inches)	67	89	107
Height (inches)	51	65	65
Length (inches)	63	68	70
Max. Opening (inches)	29	40	33
Max. Digging Depth (inches)	22	31	31

Tree Spades (Continued next page)

TREE SPADE

SKID STEER LOADERS/COMPACT TRACK LOADERS

FEATURES

- Interfaces with skid-steer auxiliary electric controls or optional electric control joystick to function the hydraulic valve
- Powder coated frame
- Low profile blade towers allow machine to fit between closely planted trees
- High strength “T1” steel blade material
- Two-year warranty
- Overlapping blades to clean cut roots
- Adjustable blade slides to maintain alignment
- Adjustable blade depth control legs
- Wide gate opening to clear trees easily
- Produces round balls that actually fit wire baskets available from many vendors
- Built for heavy use at production nurseries and rental centers
- Straight blade design has less resistance in penetrating soil
- 25° blade angle to adapt to soil conditions and customer preference
- Produce several uniform ball sizes with 1 set of blades
- Inside frame allows work in tight areas and allows a skid-steer to handle a bigger spade size
- Inside frame style allows compressing tree ball in the basket
- Blade towers use high-density plastic slides to eliminate greasing

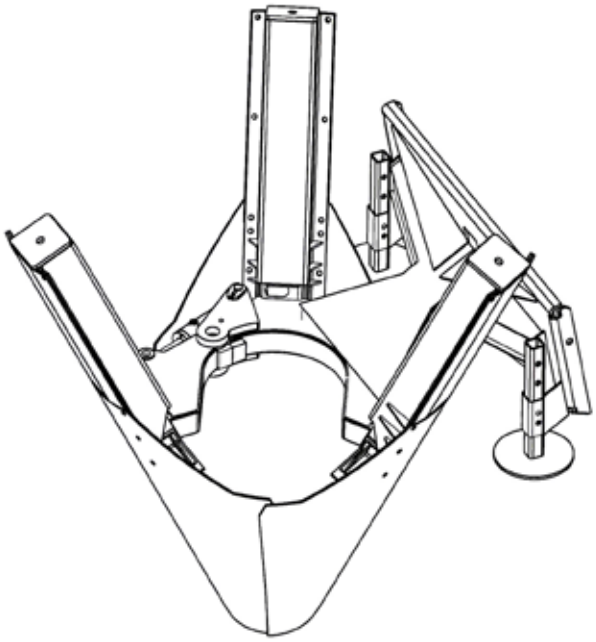

APPLICATIONS

- Designed for production tree harvesting, nursery applications and landscaping

Tree Spades (Continued next page)

TRENCHER

SKID STEER LOADERS/COMPACT TRACK LOADERS

PREPACKAGED COMPLETE TRENCHER includes drive head, boomer/crumber and chain as indicated. Also includes mounting brackets, manual side shift, hoses and quick couplers. Optional hydraulic side shift also available separately.

	PART NUMBER	WEIGHT LB
MODEL 625 TRENCHER-STD FLOW (14-22 gpm) with 36" Boom/crumber, 86620053 and 6x36 TES chain, 9862926.	47725415	1010
MODEL 625 TRENCHER-STD FLOW (14-22 gpm) with 48" Boom/crumber, 86620055 and 6x48 TES chain, 9862932.	47725416	1060
MODEL 625 TRENCHER-STD FLOW (14-22 gpm) with 36" Boom/crumber, 86620053 and 6x36 R&F chain, 86621858.	51519252	1240

CONFIGURABLE TRENCHERS. Basic trencher includes trencher head, mounting brackets, manual side shift, hoses and quick couplers. Must specify boom and chain options separately. Optional hydraulic side shift also available separately.

AUXLIARY BOOM HYDRAULICS REQUIRED AS NOTED	PART NUMBER	WEIGHT LB
Model 625 Trencher - Std Flow (14-22 gpm)	86620051	755
Model 640 Trencher - High Flow (25-28 gpm)	84421461	880
Model 640 Trencher - High Flow (29-35 gpm)	87554973	880
Model 640 Trencher - High Flow (36-44 gpm)	51450334	880

MODEL COMPATIBILITY	L213 L215 L216			L218 L220	L221 L223	L225 L230	L228 L234		C227	C232 C234 C237 C238 C245	REQ'D EQUIPMENT					
	L150	L160	L170 L175		L180	L185 L190		C175	C185 C190		STD FLOW	HIGH FLOW	CASE DRAIN	MFH	DEMO DOOR	2ND AUX
625 TRENCHER - STD FLOW (14-22 gpm)	•	•	•	•	•	•	•	•	•	•	R					O
MODEL 640 TRENCHER- HIGH FLOW (25-28gpm)			•	•				•				R	R			O
MODEL 640 TRENCHER - HIGH FLOW (29-35 gpm)				•	•	•			•			R	R			O
MODEL 640 TRENCHER - HIGH FLOW (36-44 gpm)							•			•		R	R			O

OPTIONAL COMPONENTS (Order as needed)

	PART NUMBER	WEIGHT LB
Hydraulic Side shift package - Requires 2nd aux. kit	86620056	52

COMPLETING PACKAGES BOOM AND CRUMBER OPTIONS
(Must order one for complete unit. Not required for prepackaged units)

30" Boom and crumber assembly	86620052	104
36" Boom and crumber assembly	86620053	115
42" Boom and crumber assembly	86620054	128
48" Boom and crumber assembly	86620055	140
60" Boom and crumber assembly (for model 640 only)	87554975	180

Trenchers (Continued next page)

CHAIN OPTIONS 50,000 lb, 2" pitch (Must match boom length. Order one to Complete Unit.)

	PART NUMBER	WEIGHT LB
For 30" Boom - Tooth Every Station (TES)		
6" wide chain	9862922	110
8" wide chain	9862923	118
10" wide chain	9862924	130
12" wide chain	9862925	145
For 30" Boom - Tooth Every Other Station (TEOS)		
6" wide chain	9862934	89
8" wide chain	9862935	94
10" wide chain	9862936	98
12" wide chain	9862937	108
For 30" Boom - Rock and Frost Chain		
6" wide chain (50% bullet teeth/ 50% cup teeth)	86621857	152
For 30" Boom - Shark tooth Chain		
6" wide chain (70% shark teeth/30% cup teeth)	87027549	118
6" wide chain (100% shark teeth)	87027550	121
For 36" Boom - Tooth Every Station (TES)		
6" wide chain	9862926	135
8" wide chain	9862927	142
10" wide chain	9862928	155
12" wide chain	87050858	190
For 36" Boom - Tooth Every Other Station (TEOS)		
6" wide chain	9862938	103
8" wide chain	9862939	108
10" wide chain	9862940	116
For 36" Boom - Rock and Frost Chain		
6" wide chain (50% bullet teeth/50% cup teeth)	86621858	182
For 36" Boom - Shark Tooth Chain		
6" wide chain (70% shark teeth/30% cup teeth)	87027551	133
6" wide chain (100% shark teeth)	87027552	137
For 42" Boom - Tooth Every Station (TES)		
6" wide chain	9862929	148
8" wide chain	9862930	156
10" wide chain	9862931	170

	PART NUMBER	WEIGHT LB
For 42" Boom - Tooth Every Other Station (TEOS)		
6" wide chain	9862941	117
8" wide chain	9862942	123
10" wide chain	9862943	132
For 42" Boom - Rock and Frost Chain		
6" wide chain (50% bullet teeth/50% cup teeth)	86621859	212
For 42" Boom - Shark Tooth Chain		
6" wide chain (70% shark teeth/30% cup teeth)	87027553	153
6" wide chain (100% shark teeth)	87027554	151
For 48" Boom - Tooth Every Station (TES)		
6" wide chain	9862932	160
8" wide chain	9862933	170
For 48" Boom - Tooth Every Other Station (TEOS)		
6" wide chain	9862944	130
8" wide chain	9862945	137
For 48" Boom - Rock and Frost Chain		
6" wide chain (50% bullet teeth/50% cup teeth)	86621860	242
For 48" Boom - Shark Tooth Chain		
6" wide chain (70% shark teeth/30% cup teeth)	87027555	168
6" wide chain (100% shark teeth)	87027556	172
For 60" Boom - Tooth Every Station (TES)		
6" wide chain	9862960	173
For 60" Boom - Tooth Every Other Station (TEOS)		
6" wide chain	9862970	149
For 60" Boom - Rock and Frost Chain		
6" wide chain (50% bullet teeth/50% cup teeth)	87050857	265
For 60" Boom - Shark Tooth Chain		
6" wide chain (70% shark teeth/30% cup teeth)	87027565	195

Trenchers (Continued next page)

TRENCHER

SKID STEER LOADERS/COMPACT TRACK LOADERS

FEATURES

- Side shift: Manual standard; Hydraulic optional
- 2" pitch, 50,000 lb, anti-back flex chain for maximum performance and life
- High torque hydraulic motor for maximum digging power
- Heavy duty chain (625) or planetary (640) reduction amplifies torque to cutting chain
- Sealed idler bearing is maintenance free (625)
- Low profile dirt shield for improved operator visibility
- Built-in skid shoe to provide positive depth control for auger
- Pivoting crumber shoe and bar to assist with loose soil removal from trench
- Bolt-on replaceable wear strips on boom extend boom life under rough conditions
- Drum scrapers included

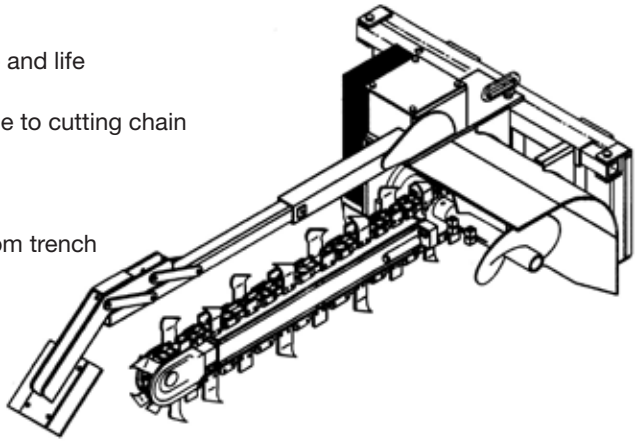

REQUIREMENTS FOR OPERATION

- Standard Auxiliary hydraulics (as indicated)
- High Flow Auxiliary hydraulics (as indicated)

SPECIFICATIONS					
DESCRIPTION	**30 in.**	**36 in.**	**42 in.**	**48 in.**	**60 in.**
Trench Depth with Auger @ 65° Digging Angle.	30"	36"	42"	48"	60"
Trench Widths Available:	6, 8, 10, 12"	6, 8, 10, 12"	6, 8, 10"	6, 8"	6"
Recommended Trenching Angle	65°	65°	65°	65°	65°
Head shaft Height	8"	8"	8"	8"	8"
Overall Trencher Length	66"	73"	80"	86"	86"
Overall Trencher Width	48"	48"	48"	48"	48"
Overall Trencher Height	32"	32"	32"	32"	32"
Spoil Discharge Reach	18"	18"	18"	18"	18"
Side Shift, Right of Corner	17"	17"	17"	17"	17"
Distance from Centerline Drive Sprocket to Back of Mounting Frame	16"	16"	16"	16"	16"

CHAIN SELECTION

TOOTH EVERY STATION (TES):
Designed for standard digging conditions in light to moderately compacted, sandy, loam soils and loosely packed gravelly soils. Typically good digging conditions.

TOOTH EVERY OTHER STATION(TEOS):
Designed to be the most productive in wet, sticky conditions such as wet clay, gumbo, etc. TEOS allows sticky soils to be discharged as it comes around the headshaft sprocket allowing the auger to pick it up and discharge spoil to the side of the trench.

ROCK AND FROST CHAIN 50/50 (50% R&F teeth/50% cup teeth):
Gives highest production in frozen ground, highly compacted or rocky soils. Bullet shaped rock teeth break tougher soils and rock allowing the cup teeth to pick it up and clean the trench. Aggressive in tough conditions but not as productive in lighter normal conditions.

SHARK TOOTH CHAIN 70/30 (70% Shark teeth/30% cup teeth):
The 70/30 chain should be used in compacted soils, light frozen ground, baked hard clay, shale or rocky soils. Shark teeth will slice, break and relieve the tough soils allowing cup teeth to follow and clean the trench. Not as productive as TES chain in normal digging conditions.

FULL SHARK TOOTH CHAIN (100% SHARK teeth):
Full shark tooth chain is recommended for fracturable rock, shale, caliche or conditions with little or no loose soil. Will not efficiently clean the trench in sand, silt, and high moisture clay conditions.

VIBRATORY ROLLER (PADFOOT DRUM)

SKID STEER LOADERS/COMPACT TRACK LOADERS

Unit includes mounting plate, hoses and quick couplers.

REQUIRES STANDARD AUXILIARY BOOM HYDRAULICS	PART NUMBER	WEIGHT LB
VRP48 48" Vibratory Roller	87373402	1630
VRP66 66" Vibratory Roller	87373403	2085
VRP73 73" Vibratory Roller	87373404	2230
VRP84 84" Vibratory Roller	87373405	2455

MODEL COMPATIBILITY	L213 L215 L216	L218	L220 L221	L223	L225 L228	L230 L234		C227		C232 C234 C237 C238 C245	REQ'D EQUIPMENT					
	L150	L160 L170	L175	L180	L185	L190	C175		C185 C190		STD FLOW	HIGH FLOW	CASE DRAIN	MFH	DEMO DOOR	2ND AUX
48" VIBRATORY ROLLER	•	•	•	•	•	•	•	•	•	•	R					
66" VIBRATORY ROLLER		•	•	•	•	•	•	•	•	•	R					
73" VIBRATORY ROLLER				•	•	•		•	•	•	R					
84" VIBRATORY ROLLER					•	•			•	•	R					

SPECIFICATIONS				
DESCRIPTION	VRP48	VRP66	VRP73	VRP84
Drum Width - in. (mm	48 (1219)	66 (1676)	73 (1854)	84 (2134)
Drum Diameter - in. (mm)	22 (559)	22 (559)	22 (559)	22 (559)
Dynamic Force - lb. (kn)	5750 (25.6)	7800 (34.7)	8550 (38.0)	9370 (41.7)
Frequency @ 20 gpm - vpm	2600	2600	2600	2600
Vibrating Wt. - lb. (kg	890 (404)	1130 (513)	1225 (556)	1370 (621)
Operating Wt. - lb. (kg)	1630 (739)	2085 (946)	2230 (1012)	2455 (1114)
Drum Oscillation	±15°	±15°	±15°	±15°
Max. Hyd. Flow - gpm (lpm)	25 (95)	25 (95)	25 (95)	25 (95)

FEATURES

- Compact sand, gravel or soil in preparation for concrete or asphalt surfacing
- Drum scrapers included
- ± 15° Drum oscillation
- Includes quick disconnects
- Can be center mounted or offset 12" to right

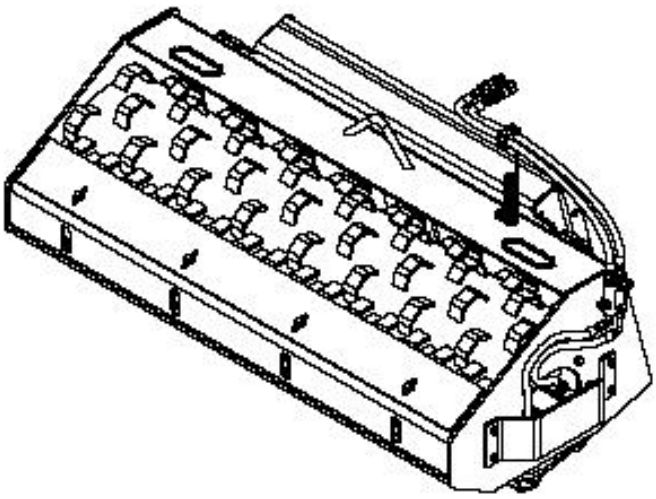

VIBRATORY ROLLER (SMOOTH DRUM)

SKID STEER LOADERS/COMPACT TRACK LOADERS

Unit includes mounting plate, hoses and quick couplers.

REQUIRES STANDARD AUXILIARY BOOM HYDRAULICS	PART NUMBER	WEIGHT LB
VRS48 48" Vibratory Roller	87373005	1680
VRS66 66" Vibratory Roller	87373006	2150
VRS73 73" Vibratory Roller	87373007	2300
VRS84 84" Vibratory Roller	87373008	2530

MODEL COMPATIBILITY	L213 L215 L216	L218	L220 L221	L223	L225 L228	L230 L234		C227		C232 C234 C237 C238 C245	REQ'D EQUIPMENT					
	L150	L160 L170	L175	L180	L185	L190	C175		C185 C190		STD FLOW	HIGH FLOW	CASE DRAIN	MFH	DEMO DOOR	2ND AUX
48" VIBRATORY ROLLER	•	•	•	•	•	•	•	•	•	•	R					
66" VIBRATORY ROLLER		•	•	•	•	•	•	•	•	•	R					
73" VIBRATORY ROLLER				•	•	•		•	•	•	R					
84" VIBRATORY ROLLER					•	•			•	•	R					

SPECIFICATIONS				
DESCRIPTION	VRP48	VRP66	VRP73	VRP84
Drum Width - in. (mm	48 (1219)	66 (1676)	73 (1854)	84 (2134)
Drum Diameter - in. (mm)	24 (610)	24 (610)	24 (610)	24 (610)
Dynamic Force - lb. (kn)	5750 (25.6)	7800 (34.7)	8550 (38.0)	9370 (41.7)
Frequency @ 20 gpm - vpm	2600	2600	2600	2600
Vibrating Wt. - lb. (kg	935 (424)	1190 (540)	1290 (585)	1440 (653)
Operating Wt. - lb. (kg)	1680 (762)	2150 (975)	2300 (1043)	2550 (1157)
Drum Oscillation	±15°	±15°	±15°	±15°
Max. Hyd. Flow - gpm (lpm)	25 (95)	25 (95)	25 (95)	25 (95)

FEATURES

- Compact sand, gravel or soil in preparation for concrete or asphalt surfacing
- Drum scrapers included
- ± 15° Drum oscillation
- Includes quick disconnects
- Can be center mounted or offset 12" to right

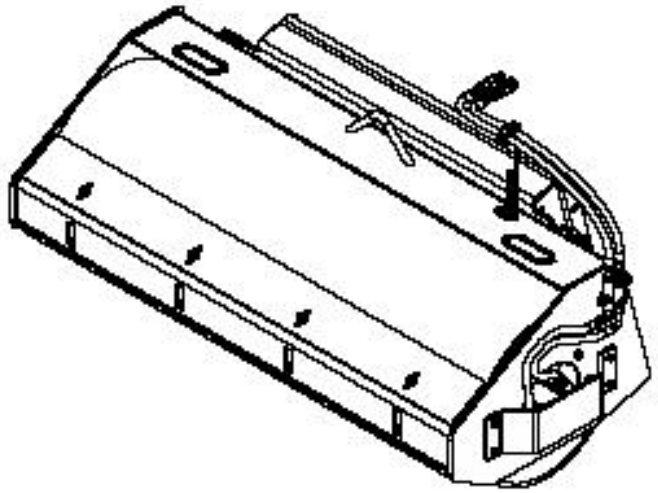

WATER KIT

SKID STEER LOADERS/COMPACT TRACK LOADERS

Water kit may be used with pick-up sweepers, angle brooms, cold planers, rock wheels, vibratory rollers and other attachments where dust control is important.

REQUIRES TUBING AND NOZZLE KIT FOR INDIVIDUAL ATTACHMENTS	PART NUMBER	WEIGHT LB
Water Kit, Rear Mount for L/C100 Series	86619370	300
Water Kit, Roof Mount for L/C200 Series	84399981	50

COMPLETING PACKAGES (Order as Needed)

Mounting Adapter Kit - Required for LS140, LS150, L140, L150 only	86619371	40
Water Nozzle Kit for brooms, other attachments - includes 4 nozzles, tubing, mounting brackets, hose and quick disconnect coupling	86619372	15
Water Nozzle Kit - includes 3 spray nozzles, tubing, and fitting to reach coupler on loader boom for SP12 - HP30 cold planers.	87045462	10
Water Nozzle Kit - includes 4 spray nozzles, tubing, and fitting to reach coupler on loader boom for HP40 cold planers.	87326406	12

MODEL COMPATIBILITY	L150	L160 L170	L175	L180 L185	L190	C175	C185 C190	L213 L215 L216	L218 L220 L221	L223 L225	L228 L230 L234	C227	C232 C234 C237 C238 C245	REQ'D EQUIP STD FLOW	REQ'D EQUIP MFH
Water Kit, Rear Mount for L/C100 Series - 86619370	•	•	•	•	•	•	•								O
Water Kit, Roof Mount for L/C200 Series - 84399981								•	•	•	•	•	•		O

FEATURES

REAR MOUNT

- 40 gallon capacity
- Rear-mounted, dual tanks
- Includes pump, tubing to end of loader boom, wiring harness, control box
- Water tanks mount to rear counterweight brackets on loader – order from CNH Industrial Parts & Service if required

ROOF MOUNT

- 30 gallon capacity
- Roof mounted, low-profile tank
- Includes mounting brackets, pump, tubing to end of loader boom, wiring harness, control box

APPLICATIONS

- Pick-up brooms, angle brooms, cold planers, rock saws, vibratory rollers and other attachments requiring dust control

REQUIREMENTS FOR OPERATION

- Nozzle kit for specific applications

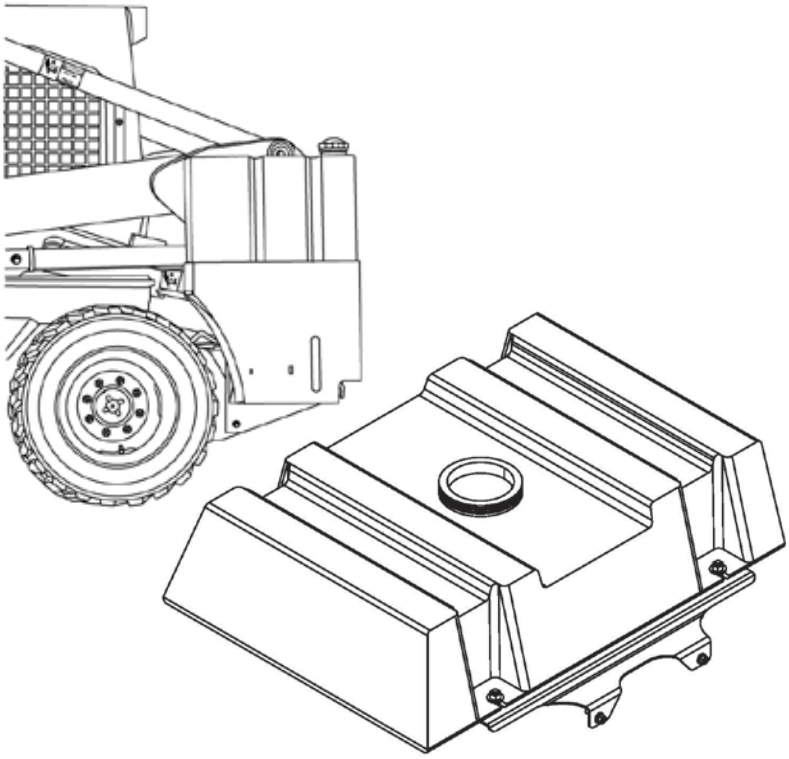

MANUFACTURER'S WARRANTIES

NEW HOLLAND AGRICULTURE

NEW HOLLAND CONSTRUCTION

CNH INDUSTRIAL | GENUINE PARTS

CNH INDUSTRIAL

Attachments: See table below

Attachments Covered by CNH Industrial Warranty

Attachment	Models	Warranty Period
• Laser Grading Box	• SSL/CTL	• Hydraulic components carry a 1-year warranty from the date of retail sale • Grading Box carries a 3-year warranty from the date of retail sale
• LT Series Grapples	• SSL/CTL	• 1-year warranty from the date of retail sale
• Farm Grapples	• SSL/CTL	• 1-year warranty from the date of retail sale
• Large Capacity Grapples	• SSL/CTL	• 1-year warranty from the date of retail sale
• 61" Mulcher (Fecon)	• SSL/CTL	• 1-year warranty from the date of retail sale
• Snow Blade/Pusher (Hydraulic)	• SSL/CTL	• 1-year warranty from the date of retail sale
• Snow V-Blade	• SSL/CTL	• 1-year warranty from the date of retail sale
• Tree Puller	• SSL/CTL	• 1-year warranty from the date of retail sale

Warranty Policy

CNH Industrial warranty covers workmanship and defect not related to wear. Warranty does not cover the following components:

- Non-defective replaced as a result of expected wear during the warranty period
- Failures due to incorrectly stored, installed, maintained or handled products
- Defects related to finishes, coatings and logos/decals, to the extent such defects are caused by normal wear and tear
- Failure as a result of having been incorrectly installed or maintained after delivery to a dealer or customer

Additional warranty claim requirements:

- Claims submitted for finishes, coatings and logos/decals require photos of the failure prior to repair
- If attachment is sold and invoiced with a wholegood, the attachment does not require eSettlement registration to receive warranty from the date of invoice in accordance with the chart in Section 4.7.1, Service Parts Warranty Coverage. Enter the claim using the wholegood serial number and hours of use.
- If attachment is sold and invoiced separately, the attachment does not require eSettlement registration to receive warranty from date of invoice in accordance with the chart in Section 4.7.1, Service Parts Warranty Coverage. Enter the claim using the correct generic serial number PARTSCAG or PARTSCE. Enter using Warranty Type "N" and generic standard repair times for labor.

MANUFACTURER'S WARRANTIES

AMMBUSHER , INC.

Attachments: Post Puller , Ammbusher Rotary Cutter

POST PULLER WARRANTY

AMMBUSHER, Inc. warrants each new product to be free from defects in material and workmanship. For 90 days from the date of purchase, when the attachment has been maintained and lubricated in accordance with the operating and maintenance instructions in the Owners Manual, AMMBUSHER replace free of charge, any defect in material or workmanship in this product.

This warranty does not cover:

This warranty excludes cam clamps and replaceable jaws on the V-brace, which are expendable and become worn during normal use.

Repairs on the POST PULLER because of alteration, an accident, or operator abuse or negligence, including the failure to maintain and operate the equipment according to instructions contained in the Owners Manual, or if repairs have been made with parts other than those obtainable through AMMBUSHER, Inc.

AMMBUSHER ROTARY CUTTER WARRANTY

AMMBUSHER, Inc. warrants each new product to be free from defects in material and workmanship. For 90 days from the date of purchase, when the attachment has been maintained and lubricated in accordance with the operating and maintenance instructions in the Owners Manual, AMMBUSHER replace free of charge, any defect in material or workmanship in this product.

This warranty does not cover:

This warranty excludes blades, which are expendable and become worn during normal use.

Repairs on the motor, gearbox or couplers because of alteration, an accident, or operator abuse or negligence, including the failure to maintain and operate the equipment according to instructions contained in the Owners Manual, or if repairs have been made with parts other than those obtainable through AMMBUSHER, Inc.

Disassembly of motor will void motor warranty.

Our obligation under this warranty shall be limited to repairing or replacing, free of charge to the original purchaser, any part that in our judgement shows evidence of a defect, provided the part is routed through the dealer and distributor from whom the purchase was made, transportation charges prepaid.

This warranty shall not be interpreted to render us liable for injury or damages of any kind. This warranty does not extend to any expense or loss incurred for labor supplies, substitute machinery rental or any other reason.

This warranty is subject to any existing condition of supply which may directly affect our ability to obtain materials or manufacture replacement parts.

AMMBUSHER, Inc. reserves the right to make improvements in design or changes in specifications at any time without incurring any obligations to owners of units previously sold.

No one is authorized to alter, modify or enlarge this warranty nor the exclusions, limitations and reservations.

Every AMMBUSHER product is the highest quality. If you wish to contact us regarding this product, please call toll free between 8:00 a.m. and 4:30 p.m. EST, Monday through Friday. 1-800-432-5955.

Due to our policy of continual improvement, all designs, specifications and prices are subject to change without notice

MANUFACTURER'S WARRANTIES

AMMBUSHER INC.

Phone:
- Parts: (800) 432-5955
- Service: (800) 432-5955
- Warranty: (800) 432-5955

LIMITED WARRANTY

AMMBUSHER, Inc. warrants each new product to be free from defects in material and workmanship. For 90 days from the date of purchase, when the attachment has been maintained and lubricated in accordance with the operating and maintenance instructions in the Owners Manual, AMMBUSHER replace free of charge, any defect in material or workmanship in this product.

This warranty does not cover:

This warranty excludes blades, which are expendable and become worn during normal use.

Repairs on the motor, gearbox or couplers because of alteration, an accident, or operator abuse or negligence, including the failure to maintain and operate the equipment according to instructions contained in the Owners Manual, or if repairs have been made with parts other than those obtainable through AMMBUSHER, Inc.

Disassembly of motor will void motor warranty.

Our obligation under this warranty shall be limited to repairing or replacing, free of charge to the original purchaser, any part that in our judgement shows evidence of a defect, provided the part is routed through the dealer and distributor from whom the purchase was made, transportation charges prepaid.

This warranty shall not be interpreted to render us liable for injury or damages of any kind. This warranty does not extend to any expense or loss incurred for labor supplies, substitute machinery rental or any other reason.

This warranty is subject to any existing condition of supply which may directly affect our ability to obtain materials or manufacture replacement parts.

AMMBUSHER, Inc. reserves the right to make improvements in design or changes in specifications at any time without incurring any obligations to owners of units previously sold.

No one is authorized to alter, modify or enlarge this warranty nor the exclusions, limitations and reservations.

Every AMMBUSHER product is the highest quality. If you wish to contact us regarding this product, please call toll free between 8:00 a.m. and 4:30 p.m. EST, Monday through Friday. 1-800-432-5955.

MANUFACTURER'S WARRANTIES

ARCTIC INC.

Bradley, IL 60915
Phone:
- Warranty: (800) 242-3766

Attachments: Sectional Snow Pusher

What's Covered At-A-Glance

Not Covered

- Failure resulting from abuse
- Improper service
- Misuse
- Negligence
- Accidental impact
- Improper operation
- Wear parts, including:
  - Wear shoes
  - Hardware
  - Cutting edges
  - Poly mounting blocks
- Injury
- Death
- Loss of revenue or profit

Covered

- Welds
- Defective workmanship

Warranty Policy

Manufacturer warrants the Sectional Sno-Plow™ to be free of defects of material and workmanship for a period of two (2) years from the date of delivery by the customer. During this period, the user is responsible for informing the manufacturer of any problems within 10 days of the problem(s). Dealer/Distributor must notify the manufacturer by phone, fax or e-mail. The original warranty card must be returned to the manufacturer. **(Failure to return a fully completed warranty registration card, with proof of purchase, within 30 days upon receiving a new Sectional Sno-Plow™ will void warranty.)**

The manufacturer will not warranty any wear parts such as wear shoes, poly mounting blocks, torsion springs, hardware and cutting edges. Warranty excludes failure resulting from abusive and improper service, misuse, negligence and accidental impact, including any non-factory repair or alteration. The manufacturer will void all warranties specific or implied.

All claims must be discussed with a representative of the manufacturer prior to any repairs, or warranty will be void. Recommended repairs and costs are to be discussed with and agreed upon by a manufacturer's representative. Repair or labor (at an agreed rate) will be performed by a manufacturer's specified dealer, and at a repair shop designated by the manufacturer. The repair or replaced product shall be guaranteed for the applicable warranty's remaining period. All shipping costs associated with any repairs are the customer's responsibility.

Due to our policy of continual improvement, all designs, specifications and prices are subject to change without notice

MANUFACTURER'S WARRANTIES

BEARCAT

Attachments: Chippers

West Fargo, ND 58078
Phone:
- Parts: (800) 237-7335
- Service: (800) 237-7335
- Warranty: (800) 237-7335

Limited Warranty

This warranty applies to all AG and Outdoor Power Equipment manufactured by Crary Industries.

Crary Industries warrants to the original owner each new Crary Industries product to be free from defects in material and workmanship, under normal use and service. The warranty shall extend 1 year from date of delivery for income producing (commercial) applications and 2 years from date of delivery for non-income producing (consumer) use of the product. The product is warranted to the original owner as evidenced by a completed warranty registration on file at Crary Industries. Replacement parts are warranted for (90) days from date of installation.

The warranty registration must be completed and returned to Crary Industries within 10 days of delivery of the product to the original owner or the warranty will be void.

In the event of a failure, return the product, at your cost, along with proof of purchase to the selling Crary Industries dealer. Crary Industries will, at its option, repair or replace any parts found to be defective in material or workmanship. Warranty on any repairs will not extend beyond the product warranty. Repair or attempted repair by anyone other than a Crary Industries dealer as well as subsequent failure or damage that may occur as a result of that work will not be paid under this warranty. Crary Industries does not warrant replacement components not manufactured or sold by Crary Industries.

- This warranty applies only to parts or components that are defective in material or workmanship.
- This warranty does not cover normal wear items including but not limited to bearings, belts, pulleys, filters and chipper knives.
- This warranty does not cover normal maintenance, service or adjustments.
- This warranty does not cover depreciation or damage due to misuse, negligence, accident or improper maintenance.
- This warranty does not cover damage due to improper setup, installation or adjustment.
- This warranty does not cover damage due to unauthorized modifications of the product.
- Engines are warranted by the respective engine manufacturer and are not covered by this warranty.

Crary Industries is not liable for any property damage, personal injury or death resulting from the unauthorized modification or alteration of a Crary product or from the owner's failure to assemble, install, maintain or operate the product in accordance with the provisions of the Owner's manual.

Crary Industries is not liable for indirect, incidental or consequential damages or injuries including but not limited to loss of crops, loss of profits, rental of substitute equipment or other commercial loss.

This warranty gives you specific legal rights. You may have other rights that may vary from area to area.

Crary Industries makes no warranties, representations or promises, expressed or implied as to the performance of its products other than those set forth in this warranty. Neither the dealer nor any other person has any authority to make any representations, warranties or promises on behalf of Crary Industries or to modify the terms or limitations of this warranty in any way. Crary Industries, at its discretion, may periodically offer limited, written enhancements to this warranty.

Crary Industries reserves the right to change the design and/or specifications of its products at any time without obligation to previous purchasers of its products.

MANUFACTURER'S WARRANTIES

BURCHLAND

Attachments: Silt Fence Installer

Gilman, IA 50106
Phone:
- Parts: (641) 498-2063
- Service: (641) 498-2063
- Warranty: (641) 498-2063

LIMITED WARRANTY FOR NEW BURCHLAND MFG. EQUIPMENT

The manufacturer warrants to the original retail purchaser that this product is free from defects in material and workmanship and agrees to repair or replace, at manufacturer's discretion, any defective product free of charge within 1 year from the date of purchase.

This warranty is not transferable and does not cover damage resulting from defects other than in material or workmanship, or damage caused by unreasonable use, including the failure to provide reasonable and necessary maintenance. Also, the warranty obligations do not apply to conditions resulting from misuse, alteration or accident. In addition, this warranty does not cover replacement of parts that may wear and need to be replaced with reasonable use within the warranty period or which may require replacement in connection with normal maintenance. This warranty terminates once the product has been altered or repaired by others without Burchland's express written consent.

SAVE YOUR SALES SLIP

Proof of purchase in the form of your dated sales receipt, cash register slip, etc. showing the serial number and the model of your product will be required before our dealers can perform warranty service on the product. You must at your own expense, arrange to deliver or ship the product for warranty repairs and arrange for pickup or return of the product after repairs have been made.

THIS LIMITED WARRANTY IS IN LIEU OF ALL OTHER EXPRESS WARRANTIES. ANY IMPLIED WARRANTY OF FITNESS FOR A PARTICULAR PURPOSE, MERCHANTABILITY OR OTHERWISE, SHALL BE EXCLUDED AND HEREBY DISCLAIMED. THE MANUFACTURER SHALL NOT BE LIABLE FOR ANY SPECIAL, INCIDENTAL OR CONSEQUENTIAL DAMAGES INCLUDING LOSS OF PROFITS LOSS OF PRODUCTION OR ANY DELAY ARISING IN CONNECTION WITH THE INABILITY TO USE THE PRODUCTS.

HOW TO OBTAIN WARRANTY SERVICE

Warranty service can be obtained from a Burchland dealer authorized to make warranty repairs. If you need warranty service, check first with the dealer from whom you purchased the product.

The manufacturer will not make any reimbursements for warranty service, except to Burchland dealers authorized to make warranty repairs. You must present your sales receipt when making any claim for warranty service.

This warranty gives you specific legal rights, and you may also have other rights which vary from state to state.

If you have any questions regarding your warranty rights and responsibilities, you should contact your Burchland dealer or Burchland Mfg. Inc. at 641-498-2063.

Due to our policy of continual improvement, all designs, specifications and prices are subject to change without notice

MANUFACTURER'S WARRANTIES

CASCADE

Attachments: Hydraulic Positioning Pallet Forks, Full-Back Pallet Fork Frame, Pallet Fork Tines

Findlay, OH 45840
Phone:
- Warranty: (800) 227-2233

WARRANTY POLICY

Cascade: warrants its products to conform to published specifications as found in its quotations, specification sheets, brochures and price lists.

Cascade New Products: consisting of attachments, forks, and genuine Cascade parts are warranted for 36 months following date of installation. Construction attachments are warranted for 12 months following date of installation.

What Cascade will do: Cascade will repair or replace, at its option, any part that a Cascade inspection reveals to be defective in materials or workmanship.

What Dealers and Customers must do: To preserve Cascade's Warranty, Dealers and Customers must carefully follow applicable Cascade Installation Instructions, Service Manuals and Operator Guides when maintaining and operating Cascade equipment. Customers must obtain written authorization for repairs or maintenance other than removal or replacement of defective parts. Unauthorized repairs, modifications, or alterations, use of parts not provided by Cascade, or failure to follow Cascade's Installation Instructions, Service Manuals and Operator Guides will result in loss of Warranty and Customers assumption of all liability resulting from the repair, maintenance, modification or alteration.

Exclusions: Cascade assumes no responsibility for loss, damage or injury to person or property, or for consequential damages, resulting from the possession or use of its products. Cascade's warranty does not cover wear, tear, abnormal applications, normal or scheduled maintenance. THERE ARE NO WARRANTIES EITHER EXPRESS OR IMPLIED INCLUDING ANY WARRANTY OF FITNESS FOR A PARTICULAR PURPOSE WHICH EXTEND BEYOND THOSE STATED IN THIS WARRANTY AND THE PRODUCT DESCRIPTION ON THE FACE OF CASCADE'S ORDER ACKNOWLEDGEMENT.

MANUFACTURER'S WARRANTIES

GROUSER PRODUCTS, INC.

West Fargo, ND 58078
Phone:
- Parts: (800) 747-6182
- Service: (800) 747-6182
- Warranty: (800) 747-6182

Attachments: Dozer Blades, Steel Tracks

Warranty

Grouser Products. Inc. warrants its Track and Dozers for one year against defective material or workmanship. The warranty is for repair or replacement of those parts that are deemed defective by Grouser Products. Any modification to the Dozer, Track or parts without proper authorization voids the warranty. Any product returned to Grouser Products for warranty inspection must be shipped freight prepaid and will be returned freight collect unless authorized otherwise. All costs for removal and installation are at customer's expense. Grouser Products warranty does not cover damages to loader, loader tires, or the environment resulting from use. Tire sizes can and do vary in width and height, which can cause tire damage or a clearance problem. It is the responsibility of the customer to determine that final fit up, including clearances and safety shielding is correct. There is no other warranty.

If you have any questions pertaining to this warranty or tire fit please call Grouser Products:

800-747-6182 or 701-282-7710

E-mail: grouser@grouser.com

Web: www.grouser.com

Due to our policy of continual improvement, all designs, specifications and prices are subject to change without notice

MANUFACTURER'S WARRANTIES

RDS TECHNOLOGY LTD./ LOUP ELECTRONICS

Attachments: Load Monitors, Onboard Scales

Lincoln, NE 68506
Phone:
- Parts: (402) 464-7131
- Service: (402) 464-7131
- Warranty: (402) 464-7131

LOUP ELECTRONICS WARRANTY & SERVICE AGREEMENT

Loup Electronics warrants to the original purchaser that, if any part of the product proves defective in material or workmanship within one (1) Year from the date of purchase, and is returned to Loup Electronics within 30 days after the defect is discovered, Loup Electronics will (at its option) repair or replace said part. Products shipped to Loup Electronics freight prepaid will be returned freight prepaid. Products shipped to Loup Electronics freight collect will be returned freight collect.

LIMITATIONS

Warranty does not apply to parts or products that are damaged as a result if misuse, neglect, accident or fire, or of lightning, flooding or other acts of God, or by improper installation or maintenance, of which Loup Electronics will be the sole judge. Warranty does not apply to parts or products that have been modified by unauthorized party that has in Loup Electronics' judgement affected their performance or reliability. Warranty does not apply if parts or product substantially fulfills the performance specifications.

EXCLUSION OF OTHER WARRANTIES AND REMEDIES

THIS WARRANTY IS IN LIEU OF AND EXCLUDES ALL OTHER WARRANTIES EITHER EXPRESS OR IMPLIED BY OPERATION OF LAW OR OTHERWISE. THE SOLE AND EXCLUSIVE REMEDY AGAINST LOUP ELECTRONICS SHALL BE FOR THE REPAIR OR REPLACEMENT OF DEFECTIVE PARTS AS PROVIDED, AND NO OTHER REMEDY (INCLUDING BUT NOT LIMITED TO INCIDENTAL, SPECIAL, INJURY TO PERSONS OR PROPERTY, OR ANY OTHER LOSS) SHALL BE AVAILABLE. Loup Electronics neither assumes nor authorizes anyone to assume for it any other obligation or liability in connection with said part or product.

SERVICE

In warranty and Out of warranty service is available through Loup Electronics or Loup Electronics authorized and trained warranty & service depots.

MANUFACTURER'S WARRANTIES

PALADIN

Dexter, MI
Phone:
- Parts (800) 922-2981 ext 21314
- Service (800) 922-2981 ext 21341
- Warranty: (800) 922-2981 ext 21341

Attachments: All other attachments

(excluding attachments provided by other manufacturers)

Light Construction Equipment

OEM Limited Warranty

All new Paladin Light Construction Equipment products are warranted to be free from defects in materials or workmanship which may cause failure under normal usage and service when used for the purpose intended.

In the event of failure within twelve (12) months from initial retail sale, lease or rental date (excluding cable, ground engaging parts such as sprockets, digging chain, bearings, teeth, tamping and demolition heads, blade cutting edges, pilot bits, auger teeth, auger heads & broom bristles), if after examination, Paladin determine failure was due to defective material and/or workmanship, parts will be repaired or replaced. Paladin may request defective part or parts be returned prepaid to them for inspection at their place of business.

Any claims under this warranty must be made within fifteen (15) days after the Buyer learns of the facts upon which such claim is based. All claims not made in writing and received by Paladin within the time period specified above shall be deemed waived.

THIS WARRANTY IS IN LIEU OF ALL OTHER WARRANTIES EXPRESSED OR IMPLIED AND THERE ARE NO WARRANTIES OF MERCHANTABILITY OR OF FITNESS FOR A PARTICULAR PURPOSE. IN NO EVENT SHALL PALADIN BE LIABLE FOR CONSEQUENTIAL OR SPECIAL DAMAGE.

PALADIN'S LIABILITY FOR ANY AND ALL LOSES AND DAMAGES TO BUYER, RESULTING FROM ANY CAUSE WHATSOEVER, INCLUDING PALADIN'S NEGLIGENCE, IRRESPECTIVE OF WHETHER SUCH DEFECTS ARE DISCOVERABLE OR LATENT, SHALL IN NO EVENT EXCEED THE PURCHASE PRICE OF THE PARTICULAR PRODUCTS WITH RESPECT TO WHICH LOSSES OR DAMAGES ARE CLAIMED, OR, AT THE ELECTION OF PALADIN, THE REPAIR OR REPLACEMENT OF DEFECTIVE OR DAMAGED PRODUCTS.

Due to our policy of continual improvement, all designs, specifications and prices are subject to change without notice

MANUFACTURER'S WARRANTIES

TOKU AMERICA

Attachments: Hydraulic Compactors, Hydraulic Hammers

Willoughby, Ohio 44094
Phone:
- Service, Warranty: (440) 954-9923
- Fax: (440)-954-9929

LIMITED THREE-YEAR WARRANTY FOR HYDRAULIC HAMMERS (TNB-08M – TNB-7E)

The manufacturer warrants its Products against defects in material and workmanship. Such ***LIMITED*** warranty shall apply to the initial Purchaser only. Components (including brackets) carry a ***THREE-YEAR LIMITED WARRANTY (except seals and exclusions listed below). Seals are warranted for a period of ONE (1) YEAR.*** All Warrantees begin from date of sale to the original retail end-user or the initial rental service of the hammer.

ITEMS EXCLUDED FROM THIS WARRANTY

Normal wear items such as tools (moil, chisel, blunt, tamper, frost wedge and asphalt cutter), tool bushings, retainer pins, hoses, hose adapters, fasteners and accessories are **excluded** from any and all warrantees.

LIMITED TWO-YEAR WARRANTY FOR HYDRAULIC COMPACTORS

The manufacturer warrants its Products against defects in material and workmanship. Such ***LIMITED*** warranty shall apply to the initial Purchaser only. Body and internal components carry a ***TWO-YEAR LIMITED WARRANTY.*** All Warrantees begin from date of sale to the original retail end-user or the initial rental service of the compactor.

ITEMS EXCLUDED FROM THIS WARRANTY

Normal wear items such as seals (seals are considered wear parts), tool bushings, retainer pins, hoses, hose adapters, fasteners and accessories are **excluded** from any and all warrantees.

WARRANTY LIMITATIONS

This warranty will be in effect only if:

1. The Purchaser or his agent has the product installed and operating in accordance with the published Manufacturers specifications and guidelines.
2. The Purchaser or his agent does not exceed the Products published design operating range for hydraulic flow, pressure or recommended carrier size.
3. The Purchaser or his agent complies with the maintenance schedule in the Operating and Service Manual supplied with each Product.
4. The Purchaser or his agent only uses replacement parts/products received from or approved by Toku America, Inc.

This warranty will not cover defects/failures caused by abuse, neglect, misuse, lack of maintenance, accident or use of Product beyond its published design capacity, specifications or recommended applications. The Manufacturer will, at its option, determine what, if any, defective/faulty components will be accepted for warranty coverage. The Manufacturer will, at its option, determine whether to repair or replace components deemed faulty because of defective material or workmanship. The manufacturer will not be accountable for mileage, travel time, travel costs, and/or any freight costs incurred to facilitate the needed replacement or repairs beyond those stated within the document (see next page) titled "Warranty Policy Statement". The Manufacturer shall not be liable for lost rental income, machine availability or failure of components not supplied or installed by Manufacturer.

WARRANTY DISCLAIMER

This Warranty is exclusive and in lieu of all other representations and warranties, expressed or implied. The Manufacturer expressly disclaims and excludes and implied warranty of merchantability or fitness for a particular purpose. In no event shall the Purchaser or his agent be entitled to any consequential damages of any kind, whether arising out of breach of contract, warranty (including negligence and strict liability) or other theories of law, with respect to products sold or services rendered by the Manufacturer, or any undertakings, acts or omissions relating thereto. The Manufacturer reserves the right to change these policies as conditions dictate.

Continued on next page

TOKU AMERICA

Attachments: Hydraulic Compactors, Hydraulic Hammers

WARRANTY POLICY STATEMENT

This document spells out Toku America, Inc. specific policies concerning submissions or warranty claims. This document is on addition to the Toku America, Inc. *Limited Warranty for Hydraulic Breakers* that accompanies all new products.

1. Warranty Registration Card

Each hydraulic breaker is shipped with a *Warranty Registration Card.* In order to properly process your claim, this card ***must*** be on file at Toku America, Inc. This card not only registers the product for warranty purposes, it keeps Toku America, Inc. informed so we can contact you concerning product updates, parts specials and service bulletins.

2. Ordering Warranty Replacement Parts

All parts ordered from Toku America, Inc. will, ***without exception,*** be invoiced and shipped freight collect or prepaid with freight on the invoice.

3. Filing a Claim

Every Toku America, Inc. product shipped includes an Owner's Manual and package containing a *Warranty Claim Form* and a *Hammer Checklist* for pre-delivery.

4. Using the Warranty Claim Form

Fill out all items as completely as possible. Take note of (5.) below. In the section titled "DESCRIPTION OF FAILURE" describe the failure as clearly as possible along with operating conditions of the breaker and carrier as best you can.

In order for Toku America, Inc. to consider "DEALER LABOR" and "DEALER MILEAGE" in your claim, your ***published*** labor and mileage rates must be on file with Toku America, Inc. or must accompany the claim form.

5. Warranty Submission Time Limit

No more than thirty (30) days should elapse between the "DATE OF FAILURE" and "DATE OF CLAIM". Claims submitted beyond thirty (30) days from the "DATE OF FAILURE" will be denied.

Toku America, Inc.'s purpose is to provide the best possible product reliability and customer service. Our best sources for product reliability information and failure analysis are used/failed parts form the field. A broken side rod bolt or piston that has been exposed to weeks of weather or knocking around your shop tells us little or nothing. It may have been a valid claim when the part failed. If we can't tell why or where the part failed because of rust or damage we can't warranty the part.

6. Requesting a Returned Goods Authorization (RGA)

Before returning a suspected warranty part, call Toku America, Inc. at (877) 954-9923 and our customer service representative will provide you with a RGA number. Please have the description of the part(s) at hand and the method by which you will be returning the part prepaid to Toku America, Inc. At that time it may be determined that you need not return the part and Toku America, Inc. may warrant the part without examination at its sole discretion. Do not scrap any parts under warranty consideration until authorized by Toku America, Inc. or until credit is received.

7. Returning a Warranted Part

All returned parts must be shipped prepaid (not collect) and include the RGA number prominently displayed on the shipping label. If a part is particularly heavy, we may be able to work out a more favorable freight rate for you from one of our regular carriers. Please contact us for further information.

8. Toku America, INC. Claims Processing

Toku America, Inc. will respond to the dealer submitting the claim within 30 days as follows"

- A credit for an approved claim which contains the required information or,
- A request for further information, for return of the parts for analysis (refer to 6. and 7. above) or,
- Notification of a denied claim with an explanation of why the claim was denied.

Due to our policy of continual improvement, all designs, specifications and prices are subject to change without notice

PART NUMBER	PART DESCRIPTION	LIST PRICE
9862462	WHEEL SPACER KIT	$ 346.00
9862464	WHEEL SPACER KIT	$ 399.00
9862922	CHAIN ASSY- 6 X 30 TES	$ 780.00
9862923	CHAIN ASSY- 8 X 30 TES	$ 860.00
9862924	CHAIN ASSY- 10 X 30 TES	$ 1,230.00
9862925	CHAIN ASSY- 12 X 30 TES	$ 1,230.00
9862926	CHAIN ASSY- 6 X 36 TES	$ 930.00
9862927	CHAIN ASSY- 8 X 36 TES	$ 960.00
9862928	CHAIN ASSY- 10 X 36 TES	$ 1,190.00
9862929	CHAIN ASSY- 6 X 42 TES	$ 990.00
9862930	CHAIN ASSY- 8 X 42 TES	$ 1,130.00
9862931	CHAIN ASSY- 10 X 42 TES	$ 1,320.00
9862932	CHAIN ASSY- 6 X 48 TES	$ 1,120.00
9862933	CHAIN ASSY- 8 X 48 TES	$ 1,240.00
9862934	CHAIN ASSY- 6 X 30 TEOS	$ 660.00
9862935	CHAIN ASSY- 8 X 30 TEOS WIDE	$ 850.00
9862936	CHAIN ASSY- 10 X 30 TEOS	$ 930.00
9862937	CHAIN ASSY- 12 X 30 TEOS	$ 900.00
9862938	CHAIN ASSY- 6 X 36 TEOS	$ 740.00
9862939	CHAIN ASSY- 8 X 36 TEOS	$ 780.00
9862940	CHAIN ASSY- 10 X 36 TEOS	$ 860.00
9862941	CHAIN ASSY- 6 X 42 TEOS	$ 850.00
9862942	CHAIN ASSY- 8 X 42 TEOS	$ 850.00
9862943	CHAIN ASSY- 10 X 42 TEOS	$ 950.00
9862944	CHAIN ASSY- 6 X 48 TEOS	$ 970.00
9862945	CHAIN ASSY- 8 X 48 TEOS	$ 960.00
9862960	CHAIN ASSY- 6 X 60 TES	$ 1,310.00
9862970	CHAIN ASSY- 6 X 60 TEOS	$ 1,180.00
9863126	TREE SHOVEL- LAF1836- 36"	$ 1,660.00
9863127	TREE SHOVEL- LAF1842- 42"	$ 1,770.00
9863128	TREE SHOVEL- LAF1846- 46"	$ 1,890.00
9863582	ATTACHMENT- LOG GRAPPLE - NH	$ 5,160.00
9863606	AUGER 6"X4' 256 RD- HDF	$ 270.00
9863607	AUGER 9"X4' 256 RD- HDF	$ 390.00
9863608	AUGER 12"X4' 256 RD- HDF	$ 460.00
9863609	AUGER 15"X4' 256 RD- HDF	$ 590.00
9863610	AUGER 18"X4' 256 RD- HDF	$ 750.00
9863611	AUGER 24"X4' 256 RD- HDF	$ 910.00
9863612	AUGER 30"X4' 256 RD- HDF	$ 1,210.00
9863613	AUGER 36"X4' 256 RD- HDF	$ 1,380.00
9863614	AUGER 6"X4' 256 RD- HDC	$ 400.00
9863615	AUGER 9"X4' 256 RD- HDC	$ 600.00
9863616	AUGER 12"X4' 256 RD- HDC	$ 640.00

9863617	AUGER 15"X4' 256 RD- HDC	$	810.00
9863618	AUGER 18"X4' 256 RD- HDC	$	940.00
9863619	AUGER 24"X4' 256 RD- HDC	$	1,380.00
9863620	AUGER 30"X4' 256 RD- HDC	$	1,700.00
9863621	AUGER 36"X4' 256 RD- HDC	$	1,840.00
9863622	AUGER 18"X4' 256 RD- HTF	$	650.00
9863623	AUGER 24"X4' 256 RD- HTF	$	680.00
9863624	AUGER 30"X4' 256 RD- HTF	$	980.00
9863625	AUGER 36"X4' 256 RD- HTF	$	1,220.00
9863626	AUGER 6"X4' 200 HEX- HDF	$	270.00
9863627	AUGER 9"X4' 200 HEX- HDF	$	390.00
9863628	AUGER 12"X4' 200 HEX- HDF	$	460.00
9863629	AUGER 15"X4' 200 HEX- HDF	$	590.00
9863630	AUGER 18"X4' 200 HEX- HDF	$	750.00
9863631	AUGER 24"X4' 200 HEX- HDF	$	910.00
9863632	AUGER 30"X4' 200 HEX- HDF	$	1,210.00
9863633	AUGER 36"X4' 200 HEX- HDF	$	1,380.00
9863634	AUGER 6"X4' 200 HEX- HDC	$	400.00
9863635	AUGER 9"X4' 200 HEX- HDC	$	600.00
9863636	AUGER 12"X4' 200 HEX- HDC	$	640.00
9863637	AUGER 15"X4' 200 HEX- HDC	$	810.00
9863638	AUGER 18"X4' 200 HEX- HDC	$	940.00
9863639	AUGER 24"X4' 200 HEX- HDC	$	1,380.00
9863640	AUGER 30"X4' 200 HEX- HDC	$	1,700.00
9863641	AUGER 36"X4' 200 HEX- HDC	$	1,840.00
9863642	AUGER 18"X4' 200 HEX- HTF	$	650.00
9863643	AUGER 24"X4' 200 HEX- HTF	$	680.00
9863644	AUGER 30"X4' 200 HEX- HTF	$	980.00
9863645	AUGER 36"X4' 200 HEX- HTF	$	1,220.00
9863646	ADAPTER- 2 HEX F TO 256 RD M	$	230.00
9863647	ADAPTER- 256 RD F TO 2 HEX M	$	150.00
9863668	CONCRETE BRKR ATTACH-HD-10	$	181.00
9863669	METAL POST ADAPTER-HD-10	$	77.00
9863736	ROTARY CUTTER- 60"- 2-BLADE	$	6,171.00
9863737	ROTARY CUTTER- 72"- 2-BLADE	$	7,121.00
9863807	PREPARATOR- 66"	$	10,210.00
9863808	PREPARATOR- 76"	$	10,960.00
47358360	SNOW BLOWER 84IN EHF - NH SSL	$	13,580.00
47358361	SNOW BLOWER 96IN EHF - NH SSL	$	13,940.00
47358362	SNOW BLOWER 84IN EHF-CASE SSL	$	13,580.00
47358363	SNOW BLOWER 84IN EHF-CASE SSL	$	13,940.00
47358394	BROOM- DUAL MOTOR- 96IN NH SSL	$	7,910.00
47358395	BROOM-DUAL MOTOR-96IN CASE SSL	$	7,910.00
47365338	BUCKET LM 97 IN CASE TLB	$	2,940.00
47403651	KIT ELECT CONTROL UNIVERSAL	$	1,100.00
47423913	ANGLE- ACS HITCH 96IN(W110B/C)	$	21,100.00
47423914	ANGLE-ACS HITCH 108IN(W130B/C)	$	21,750.00

47423916	ANGLE-ACS HITCH 120IN(W170B/C)	$ 23,640.00
47423918	ANGLE-ACS HITCH 120IN(W190B/C)	$ 26,610.00
47423920	ANGLE-ACS HITCH 96" CIH 521E/F	$ 21,100.00
47423923	ANGLE-ACS HITCH 108"CIH 621E/F	$ 21,750.00
47423925	ANGLE-ACS HITCH 120"CIH 721E/F	$ 23,640.00
47423927	ANGLE-ACS HITCH 120"CIH 821E/F	$ 26,610.00
47443885	SCRAP GRAPPLE 60IN UTILITY -NH	$ 4,490.00
47443886	SCRAP GRAPPLE 66IN UTILITY -NH	$ 4,500.00
47443887	SCRAP GRAPPLE 72IN UTILITY -NH	$ 4,830.00
47443888	SCRAPGRAPPLE 60IN UTILITY-CASE	$ 4,490.00
47443890	SCRAPGRAPPLE 66IN UTILITY-CASE	$ 4,500.00
47443892	SCRAPGRAPPLE 72IN UTILITY-CASE	$ 4,830.00
47443894	BRUSH GRAPPLE 66IN UTILITY -NH	$ 4,420.00
47443895	BRUSH GRAPPLE 72IN UTILITY -NH	$ 4,600.00
47443896	BRUSHGRAPPLE 66IN UTILITY-CASE	$ 4,420.00
47443897	BRUSHGRAPPLE 72IN UTILITY-CASE	$ 4,600.00
47450903	BRACKET HAMMER- HD 2 POS SSL	$ 1,750.00
47450982	HYDRAULIC HAMMER	$ 7,425.00
47450985	HYDRAULIC HAMMER	$ 7,615.00
47450986	HYDRAULIC HAMMER	$ 9,300.00
47450987	HYDRAULIC HAMMER	$ 9,490.00
47450988	HYDRAULIC HAMMER	$ 10,300.00
47450989	HYDRAULIC HAMMER	$ 10,490.00
47450990	HYDRAULIC HAMMER	$ 14,500.00
47450996	HYDRAULIC HAMMER	$ 7,425.00
47450997	HYDRAULIC HAMMER	$ 7,615.00
47450998	HYDRAULIC HAMMER	$ 9,300.00
47450999	HYDRAULIC HAMMER	$ 9,490.00
47451000	HYDRAULIC HAMMER	$ 10,300.00
47451002	HYDRAULIC HAMMER	$ 10,490.00
47451003	HYDRAULIC HAMMER	$ 14,500.00
47451007	WORKING STEEL	$ 195.00
47451008	TOOL- CHISEL POINT-2M	$ 195.00
47451009	TOOL- BLUNT POINT-2M	$ 195.00
47451010	TOOL- FROST WEDGE-2M	$ 900.00
47451011	TOOL- ASPHALT CUTTER-2M	$ 950.00
47451012	TOOL- TAMPING PAD-2M	$ 1,245.00
47451018	WORKING STEEL	$ 325.00
47451019	WORKING STEEL	$ 325.00
47451021	TOOL- BLUNT POINT-3M	$ 325.00
47451022	WORKING STEEL	$ 955.00
47451023	TOOL- ASPHALT CUTTER-3M	$ 980.00
47451024	TOOL- TAMPING PAD-3M	$ 1,759.00
47451026	WORKING STEEL	$ 400.00
47451027	WORKING STEEL	$ 400.00
47451028	TOOL- BLUNT POINT-4M	$ 400.00
47451029	TOOL- FROST WEDGE-4M	$ 1,000.00

47451030	WORKING STEEL	$ 1,040.00
47451031	WORKING STEEL	$ 1,759.00
47451037	WORKING STEEL	$ 450.00
47451039	WORKING STEEL	$ 450.00
47451040	TOOL- BLUNT POINT 5M-6M	$ 450.00
47451041	WORKING STEEL	$ 1,500.00
47451042	WORKING STEEL	$ 1,995.00
47451095	HYDRAULIC HAMMER	$ 12,100.00
47451096	HYDRAULIC HAMMER	$ 12,100.00
47451097	HYDRAULIC HAMMER	$ 15,700.00
47451098	HYDRAULIC HAMMER	$ 15,700.00
47451105	TLB PIN AND BUSHING KIT	$ 695.00
47451118	TLB PIN AND BUSHING KIT	$ 650.00
47451167	HYDRAULIC HAMMER	$ 5,775.00
47451168	HYDRAULIC HAMMER	$ 6,250.00
47451169	HYDRAULIC HAMMER	$ 8,400.00
47451170	HYDRAULIC HAMMER	$ 9,500.00
47451171	HYDRAULIC HAMMER	$ 12,750.00
47451172	MX PIN AND BUSHING KIT	$ 650.00
47451173	MX PIN AND BUSHING KIT	$ 650.00
47451174	MX PIN AND BUSHING KIT	$ 650.00
47451175	MX PIN AND BUSHING KIT	$ 650.00
47451178	TOOL- MOIL POINT-1M	$ 215.00
47451179	TOOL- CHISEL POINT-1M	$ 215.00
47451180	WORKING STEEL	$ 215.00
47451184	HYDRAULIC HAMMER	$ 5,775.00
47451185	HYDRAULIC HAMMER	$ 6,250.00
47451186	HYDRAULIC HAMMER	$ 8,400.00
47451187	HYDRAULIC HAMMER	$ 9,500.00
47451188	HYDRAULIC HAMMER	$ 12,750.00
47451195	KIT- ADAPTER- KLAC - CNH17.18	$ 727.00
47451196	KIT- ADAPTER- KLAC - CNH27	$ 805.00
47451197	ADAPTR KLAC-CNH31.35.36.50.55	$ 965.00
47451204	HYDRAULIC HAMMER	$ 6,776.00
47451205	HYDRAULIC HAMMER	$ 6,250.00
47451206	HYDRAULIC HAMMER	$ 8,400.00
47451207	HYDRAULIC HAMMER	$ 9,500.00
47451208	HYDRAULIC HAMMER	$ 12,750.00
47461171	DIPPER STICK QD DISCONNECT KIT	$ 238.00
47531748	SNOW BLADE- TRIP EDGE- 84"-NH	$ 5,040.00
47531749	SNOW BLADE-TRIP EDGE-96"-NH	$ 5,270.00
47531750	SNOW BLADE-TRIP EDGE-108"-NH	$ 5,400.00
47531751	SNOW BLADE-TRIP EDGE-84"-CASE	$ 5,040.00
47531752	SNOW BLADE-TRIP EDGE-96"-CASE	$ 5,270.00
47531753	SNOW BLADE-TRIP EDGE-108"-CASE	$ 5,400.00
47531754	KIT-RUBBER EDGE-84"?	$ 590.00
47531755	KIT-RUBBER EDGE-96"?	$ 680.00

47531756	KIT-RUBBER EDGE-108"	$ 760.00
47531757	KIT-POLYURETHANE EDGE-84"	$ 1,132.00
47531759	KIT-POLYURETHANE EDGE-96"	$ 1,294.00
47531760	KIT-POLYURETHANE EDGE-108"	$ 1,456.00
47531761	KIT-REPLACEMENT STEEL EDGE-84"	$ 280.00
47531762	KIT-REPLACEMENT STEEL EDGE-96"	$ 320.00
47531763	KIT-REPLACEMENT STEEL EDGE-108	$ 360.00
47531764	KIT-DEFLECTOR-84"	$ 200.00
47531766	KIT-DEFLECTOR-96"	$ 220.00
47531767	KIT-DEFLECTOR-108"	$ 250.00
47559995	60 IN KIT - BROOM	$ 170.00
47559997	72 IN KIT - BROOM	$ 180.00
47559999	84 IN KIT - BROOM	$ 220.00
47574095	FORKS-72" TINES- JRB CPLR	$ 7,939.00
47574096	FORKS-72" TINES- ACS CPLR	$ 8,421.00
47575652	HAMMER- HYD- CH-6E	$ 18,005.00
47575659	HAMMER- HYD- CH-7E	$ 29,255.00
47575660	HAMMER- HYD- CH-100	$ 41,380.00
47575667	HAMMER- HYD- CH-151	$ 53,795.00
47575671	HAMMER- HYD- CH-190	$ 61,445.00
47575675	HAMMER- HYD- CH-230	$ 77,765.00
47575676	HAMMER- HYD- CH-310	$ 108,410.00
47575722	BRACKET- HAMMER TOP CAP	$ 2,600.00
47575738	BRACKET- HAMMER TOP CAP	$ 3,100.00
47575739	BRACKET- HAMMER TOP CAP	$ 3,200.00
47575740	BRACKET- HAMMER TOP CAP	$ 3,105.00
47575741	BRACKET- HAMMER TOP CAP	$ 3,667.00
47575742	BRACKET- HAMMER TOP CAP	$ 3,667.00
47575743	BRACKET- HAMMER TOP CAP	$ 4,042.00
47575744	BRACKET- HAMMER TOP CAP	$ 4,042.00
47575745	BRACKET- HAMMER TOP CAP	$ 4,667.00
47575770	KIT- HOSE- 6E/7E	$ 395.00
47575779	KIT- HOSE- CH-100	$ 420.00
47575780	KIT- HOSE- CH-141/151/190	$ 678.00
47575781	KIT- HOSE- CH-230/310	$ 935.00
47575854	TOOL- MOIL POINT - 6E	$ 595.00
47575855	TOOL- CHISEL POINT - 6E	$ 595.00
47575856	TOOL- BLUNT POINT - 6E	$ 595.00
47575860	TOOL- MOIL POINT - 7E	$ 1,150.00
47575861	TOOL- CHISEL POINT - 7E	$ 1,150.00
47575863	TOOL- BLUNT POINT - 7E	$ 1,150.00
47575871	TOOL- MOIL POINT - CH-100	$ 1,350.00
47575872	TOOL- CHISEL POINT - CH-100	$ 1,350.00
47575873	TOOL- BLUNT POINT - CH-100	$ 1,350.00
47575876	TOOL- MOIL POINT - CH-141/151	$ 1,450.00
47575877	TOOL-CHISEL POINT - CH-141/151	$ 1,450.00
47575879	TOOL-BLUNT POINT - CH-141/151	$ 1,450.00

47575882	TOOL- MOIL POINT - CH-190	$ 1,825.00
47575883	TOOL- CHISEL POINT - CH-190	$ 1,825.00
47575884	TOOL- BLUNT POINT - CH-190	$ 1,825.00
47575885	TOOL- MOIL POINT - CH-230	$ 2,195.00
47575886	TOOL- CHISEL POINT - CH-230	$ 2,195.00
47575887	TOOL- BLUNT POINT - CH-230	$ 2,195.00
47575890	TOOL- MOIL POINT - CH-310	$ 2,625.00
47575891	TOOL- CHISEL POINT - CH-310	$ 2,625.00
47575893	TOOL- BLUNT POINT - CH-310	$ 2,625.00
47591779	ATTACHMENT ROT CUTTER 60IN SF	$ 6,960.00
47591780	ATTACHMENT ROT CUTTER 72IN SF	$ 7,180.00
47591781	ATTACHMENT ROT CUTTER 78IN SF	$ 7,690.00
47591782	ATTACHMENT ROT CUTTER 72IN HF	$ 8,130.00
47591783	ATTACHMENT ROT CUTTER 72IN HF	$ 8,130.00
47591784	ATTACHMENT ROT CUTTER 78IN HF	$ 8,820.00
47591785	ATTACHMENT ROT CUTTER 78IN HF	$ 8,820.00
47591786	ATTACHMENT ROT CUTTER 60IN SF	$ 6,960.00
47591787	ATTACHMENT ROT CUTTER 72IN SF	$ 7,180.00
47591788	ATTACHMENT ROT CUTTER 78IN SF	$ 7,690.00
47591789	ATTACHMENT ROT CUTTER 72IN HF	$ 8,130.00
47591790	ATTACHMENT ROT CUTTER 72IN HF	$ 8,130.00
47591791	ATTACHMENT ROT CUTTER 78IN HF	$ 8,820.00
47591792	ATTACHMENT ROT CUTTER 78IN HF	$ 8,820.00
47591794	KIT PRESSURE GA ROTARY CUTTER	$ 300.00
47591795	KIT PRESSURE GA ROTARY CUTTER	$ 300.00
47591797	KIT DUAL WHEEL ROTARY CUTTER	$ 900.00
47591798	SET REPLACEMENT BLADE 60IN	$ 240.00
47591799	SET REPLACEMENT BLADE 72IN	$ 270.00
47591800	SET REPLACEMENT BLADE 78IN	$ 290.00
47591801	KIT WEAR SHOE ROTARY CUTTER	$ 80.00
47600075	KIT- HOSE- CH-310	$ 1,417.00
47625937	ATTACHMENT SNOW PUSH 72IN-NH	$ 3,180.00
47625938	ATTACHMENT SNOW PUSH 84IN-NH	$ 3,590.00
47625939	ATTACHMENT SNOW PUSH 96IN-NH	$ 4,020.00
47625940	ATTACHMENT SNOW PUSH 120IN-NH	$ 4,090.00
47625941	ATTACHMENT SNOW PUSH72IN-CASE	$ 3,180.00
47625942	ATTACHMENT SNOW PUSH84IN-CASE	$ 3,590.00
47625943	ATTACHMENT SNOW PUSH96IN-CASE	$ 4,020.00
47625944	ATTACHMNT SNOW PUSH120IN-CASE	$ 4,090.00
47625945	KIT PULLBACK 72IN FLD INSTALL	$ 490.00
47625946	KIT PULLBACK 84IN FLD INSTALL	$ 530.00
47625947	KIT PULLBACK 96IN FLD INSTALL	$ 580.00
47625948	KIT PULLBACK 120IN FLD INSTALL	$ 640.00
47626032	RUBBER EDGE 72IN FLD INSTALL	$ 490.00
47626033	RUBBER EDGE 84IN FLD INSTALL	$ 550.00
47626034	RUBBER EDGE 96IN FLD INSTALL	$ 590.00
47626035	RUBBER EDGE 120IN FLD INSTALL	$ 670.00

47637615	AUGER- CRADLE CX14/17B E15/18B	$	538.00
47645845	KIT PULLBACK 72IN FAC INSTALL	$	840.00
47645846	KIT PULLBACK 84IN FAC INSTALL	$	920.00
47645847	KIT PULLBACK 96IN FAC INSTALL	$	1,000.00
47645848	KIT PULLBACK 120IN FAC INSTALL	$	940.00
47670748	BACKHOE 509B - NH	$	12,360.00
47670752	BACKHOE 511B - NH	$	13,060.00
47670754	BACKHOE 611B - NH	$	14,150.00
47670832	BACKHOE 509B - CASE	$	12,360.00
47670834	BACKHOE 511B - CASE	$	13,060.00
47670835	BACKHOE 611B - CASE	$	14,150.00
47670838	FLAT PADS FOR 509B- 511B FD	$	180.00
47670839	FLAT PADS FOR 611B? FOLD-DOWN	$	230.00
47670841	STNDRD DRT PDS FOR 611B FD	$	200.00
47670842	RBR ST PADS FOR 611B FOLD-DOWN	$	480.00
47670844	VERT STAB FOR 611B (FAC INS)	$	1,000.00
47670853	VERT STAB FOR 611B (FLD INS)	$	2,200.00
47670854	2WAY AUXHYD KIT FOR 509B- 511B	$	1,740.00
47670855	2WAY AUX HYD KIT FOR 611B FAC	$	1,790.00
47670859	BUCKET- 20IN- 509B- 511B- 611B	$	1,040.00
47670861	HAMMER ADAPTER BRACKET	$	540.00
47670869	STABILIZER CYLINDER GUARD KIT	$	220.00
47670874	HMR HYD KIT FOR 509B- 511B	$	3,570.00
47670875	HMR HYD KIT FOR 611B (FLD INS)	$	3,570.00
47670876	2WAY AUX HYD KIT- 509B- 511B	$	1,660.00
47670877	2WAY AUX HYD KIT FOR 611B FLD	$	1,700.00
47687596	HMR HYD KIT FOR 509B- 511B	$	3,830.00
47687597	HMR HYD KIT FOR 611B (FAC INS)	$	1,300.00
47687598	HAMMER ADAPTER BRACKET C&P 027	$	870.00
47692544	SNOW PUSH 96IN (SSL HITCH)	$	4,050.00
47692545	SNOW PUSH 120IN (SSL HITCH)	$	4,670.00
47692546	ATTACHMENT- SNOW PUSH 96IN	$	4,660.00
47692547	ATTACHMENT- SNOW PUSH 120IN	$	5,190.00
47692548	SNOW PUSH 96IN (SSL HITCH)	$	4,050.00
47692549	SNOW PUSH 120IN (SSL HITCH)	$	4,670.00
47692550	ATTACHMENT- SNOW PUSH 96IN	$	4,660.00
47692552	ATTACHMENT- SNOW PUSH 120IN	$	5,190.00
47693227	RUBBER EDGE- 96IN- BASE PUSH	$	850.00
47693228	RUBBER EDGE- 120IN- BASE PUSH	$	890.00
47725415	TRENCHER 625-36 INCH NH	$	5,850.00
47725416	ATTACHMENT- TRENCHER 625-48IN	$	6,090.00
47725417	ATTACHMENT- TRENCHER 625-36IN	$	5,850.00
47725418	ATTACHMENT- TRENCHER 625-48IN	$	6,090.00
47737899	BUCKET GP- 75IN X 1YD- ZL402	$	2,470.00
47737900	BUCKET GP- 75IN X 1YD- ZL602	$	2,470.00
47737901	BUCKET GP- 83IN X 1.1YD- ZL402	$	3,120.00
47737902	BUCKET GP-83IN X 1.1YD W/TEETH	$	3,510.00

47737903	BUCKET GP-83IN X 1.1YD - ZL602	$ 3,120.00
47737904	BUCKET GP-83IN X 1.1YD W/TEETH	$ 3,510.00
47737905	BUCKET GP- 83IN X 1.25YD-ZL602	$ 2,750.00
47737906	BUCKET GP-83IN X1.25YD W/TEETH	$ 3,510.00
47737907	BUCKET GP- 83IN X 1.6YD -ZL602	$ 2,770.00
47737908	BUCKET GP-83IN X1.6YD W/TEETH	$ 3,510.00
47737910	BUCKET-LM- 96IN X 1.5YD- ZL402	$ 3,490.00
47737911	BUCKET-LM- 96IN X 1.5YD- ZL602	$ 3,490.00
47737912	BUCKET- LM- 96IN X 2YD- ZL602	$ 2,940.00
47737923	PALLET FORK 48IN CL II RAIL	$ 2,730.00
47737924	PALLET FORK 48IN CL II RAIL	$ 2,730.00
47737925	PALLET FORK- 48IN FL SHAFT	$ 3,230.00
47737926	PALLET FORK- 48IN FL SHAFT	$ 3,230.00
47737927	PALLET FORK- 60IN CL III RAIL	$ 2,670.00
47737928	PALLET FORK 60IN FL SHAFT	$ 2,490.00
47738546	HITCH ADAPTER- ZL402 TO SSL	$ 1,510.00
47738547	HITCH ADAPTER- ZL602 TO SSL	$ 1,510.00
47738567	BUCKET 4X1- 78IN- ZL402- NH	$ 5,740.00
47738568	BUCKET 4X1- 78IN- ZL602- NH	$ 5,500.00
47738569	BUCKET 4X1- 82IN HD- ZL602- NH	$ 5,740.00
47738570	BUCKET 4X1- 78IN- ZL402- CASE	$ 5,740.00
47738571	BUCKET 4X1- 78IN- ZL602- CASE	$ 5,500.00
47738572	BUCKET 4X1-82IN HD-ZL602- CASE	$ 5,740.00
47738577	GRAPPLE- BRUSH 78IN- ZL402 NH	$ 5,530.00
47738578	GRAPPLE- BRUSH 78IN- ZL602 NH	$ 5,530.00
47738579	GRAPPLE- BRUSH 84IN- ZL602 NH	$ 10,940.00
47738580	GRAPPLE- BRUSH 78IN-ZL402 CASE	$ 5,530.00
47738581	GRAPPLE- BRUSH 78IN-ZL602 CASE	$ 5,530.00
47738582	GRAPPLE- BRUSH 84IN-ZL602 CASE	$ 10,940.00
47738584	GRAPPLE- SCRAP 78IN- ZL402- NH	$ 7,140.00
47738585	GRAPPLE- SCRAP 78IN- ZL602- NH	$ 7,140.00
47738586	GRAPPLE- SCRAP 82IN- ZL602- NH	$ 7,290.00
47738587	GRAPPLE-SCRAP 78IN-ZL402- CASE	$ 7,140.00
47738588	GRAPPLE-SCRAP 78IN-ZL602- CASE	$ 7,140.00
47738589	GRAPPLE-SCRAP 82IN-ZL602- CASE	$ 7,290.00
47738591	BROOM- ANGLE- 96IN- ZL402- NH	$ 15,010.00
47738593	BROOM- ANGLE- 96IN- ZL602- NH	$ 15,130.00
47738594	BROOM- ANGLE- 108IN- ZL402- NH	$ 15,650.00
47738595	BROOM- ANGLE- 108IN- ZL602- NH	$ 15,770.00
47738596	BROOM- ANGLE- 96IN- ZL402-CASE	$ 15,010.00
47738597	BROOM- ANGLE- 96IN- ZL602-CASE	$ 15,130.00
47738598	BROOM- ANGLE- 108IN-ZL402-CASE	$ 15,650.00
47738599	HYD ANGLE KIT FOR 14 PIN CONN	$ 15,770.00
47766709	AUTO LUBE- 1M-6M HAMMER	$ 1,525.00
47766712	KIT- AUTO LUBE- 6E-310 HAMMER	$ 2,650.00
47766713	SHEILD KIT-AUTO LUBE-6E-310HAM	$ 650.00
47808120	PIN/BUSHING KIT	$ 650.00

47808591	COMPACTOR- SC30T - NH MHEX	$ 5,790.00
47808593	COMPACTOR- SC30T - CC MHEX	$ 5,790.00
47808595	COMPACTOR- SC60T - NH TLB	$ 7,390.00
47808600	COMPACTOR - CASE TLB	$ 7,090.00
47808607	COMPACTOR- SC60 - CASE CX75-80	$ 6,450.00
47808614	COMPACTOR SC80-CHEX CX130-160	$ 6,450.00
47808615	COMPACTOR SC110-CHEX CX210-250	$ 9,050.00
47808620	TOP CAP - SC60 (CX75-80)	$ 1,695.00
47808621	TOP CAP - SC80 (CX130-145)	$ 2,800.00
47808622	TOP CAP - SC80 (CX160)	$ 2,800.00
47808624	TOP CAP - SC110 (CX210-235)	$ 3,400.00
47808625	TOP CAP - SC110 (CX250)	$ 3,400.00
47808629	TOP CAP - SC220 (CX300)	$ 3,900.00
47808631	TOP CAP - SC220 (CX350)	$ 3,900.00
47817039	PALLET FORK- 48IN SSL HITCH	$ 2,730.00
47817040	PALLET FORK- 48IN SSL HITCH	$ 3,230.00
47817041	PALLET FORK-60IN SSL HITCH	$ 4,210.00
47817043	PALLET FORK-60IN SSL HITCH	$ 4,030.00
47898420	ROTARY CUTTER EXT DUTY 72IN	$ 14,460.00
47898424	ROTARY CUTTER EXT DUTY 72IN	$ 14,460.00
47898425	CARBIDE TEETH EXTREME CUTTER	$ 450.00
47898429	KIT- WEAR SHOE- EXTREME CUTTER	$ 140.00
47898506	PALLET FORK- 48IN	$ 3,180.00
47898507	PALLET FORK- 60IN	$ 3,180.00
47898510	PALLET FORK- 48IN	$ 2,730.00
47898512	PALLET FORK- 48 IN	$ 3,230.00
47898514	PALLET FORK- 60IN	$ 2,780.00
47898516	PALLET FORK- 60IN	$ 2,490.00
47898619	ATTACHMENT- AUGER DRIVE- X2475	$ 3,190.00
47898620	AUGER DRIVE- X2475H200- CASE	$ 3,190.00
47904378	BIT- AUGER- 6IN SRR ROCK H200	$ 1,050.00
47904381	BIT- AUGER- 9IN SRR ROCK H200	$ 1,050.00
47904382	BIT- AUGER- 12IN SRR ROCK H200	$ 1,170.00
47904383	BIT- AUGER- 16IN SRR ROCK H200	$ 1,890.00
47904384	BIT- AUGER- 18IN SRR ROCK H200	$ 2,170.00
47904385	BIT- AUGER- 20IN SRR ROCK H200	$ 2,370.00
47904386	BIT- AUGER- 24IN SRR ROCK H200	$ 2,670.00
47904387	BIT- AUGER- 30IN SRR ROCK H200	$ 2,880.00
47904388	BIT- AUGER- 36IN SRR ROCK H200	$ 3,570.00
47909707	PALLET FORK ASSY-HYD POS- 42IN	$ 2,275.00
47909708	PALLET FORK ASSY-HYD POS- 48IN	$ 2,320.00
47909711	PLLT FRK ASSY-HYD POS-W/O TNES	$ 2,015.00
47920217	WEIGH LOG 3030 SCALE KIT	$ 4,445.00
47920218	WEIGHLOG 3030 SCALE KIT	$ 4,895.00
47922307	HAMMER- CH-7J - CASE CHEX	$ 29,255.00
47922308	TOP CAP - CH-7J	$ 3,100.00
47922309	TOOL- MOIL CH-7J	$ 1,150.00

47922310	TOOL- CHISEL CH-7J	$ 1,150.00
47922311	TOOL- BLUNT CH-7J (HYD HAMMER)	$ 1,150.00
47923056	WEIGHLOG VUE SCALE KIT	$ 7,545.00
47923311	TOOL- BLUNT CH-7J	$ 1,150.00
47937193	STEEL EDGE- 60IN	$ 190.00
47937194	STEEL EDGE- 72IN	$ 200.00
47937195	STEEL EDGE- 84IN	$ 230.00
47937196	RUBBER EDGE- 60IN	$ 570.00
47937197	RUBBER EDGE- 72IN	$ 550.00
47937198	RUBBER EDGE- 84IN	$ 710.00
47937199	STEEL EDGE- 84IN	$ 560.00
47937200	STEEL EDGE- 96IN	$ 590.00
47937201	STEEL EDGE- 108IN	$ 620.00
47937202	KIT- STEEL EDGE FOR 115 SNOW B	$ 640.00
47937204	RUBBER EDGE- 84IN	$ 630.00
47937205	RUBBER EDGE- 96IN	$ 720.00
47937206	RUBBER EDGE- 108IN	$ 800.00
47937207	KIT- RUBBER EDGE FOR 115 SNOW	$ 870.00
47937208	POLYURETHANE EDGE- 84IN	$ 1,190.00
47937209	POLYURETHANE EDGE- 96IN	$ 1,360.00
47937212	KIT- POLY EDGE FOR 115 SNOW BL	$ 1,700.00
47937216	KIT- DEFLECTOR FOR 115 SNOW BL	$ 270.00
47981840	KIT- CHUTE TRUCK LOADING	$ 1,590.00
47999864	CH-6E CMPLTE PKG FOR CX75C SR	$ 21,000.00
47999871	CH-7J CMPLETE PKG FOR CX130C/D	$ 32,750.00
47999873	CH-100 CMPLTE PKG FOR CX160C/D	$ 45,000.00
47999874	CH-151 CMPLTE PKG FOR CX210C/D	$ 58,000.00
47999875	CH-190 CMPLT PKG FOR CX235C-CP	$ 66,500.00
47999876	CH-190 CMPLT PKG FOR CX250C-CP	$ 66,500.00
47999877	CH-230 CMPLTE PKG FOR CX300C/D	$ 83,000.00
47999878	CH-230 CMPLTE PKG FOR CX350C/D	$ 83,000.00
47999879	CH-310 CMPLETE PKG FOR CX470C	$ 115,000.00
48015733	HAMMER, HYD, CH-5M, TOP MT, CASE TLB	$ 11,750.00
48015734	HAMMER, HYD, CH-5M, OFFSET MT, CASE TLB	$ 11,750.00
48015736	HAMMER, HYD, CH-6M, TOP MT, CASE TLB	$ 14,250.00
48015737	HAMMER, HYD, CH-6M, OFFSET MT, CASE TLB	$ 15,350.00
48015738	KIT, HOSE, CASE 580	$ 350.00
48015740	KIT, HOSE, CASE 590	$ 395.00
48022262	CHUTE 90DEG- CONCRETE BKT	$ 448.00
48026410	SNOW PUSH 8 FT, SSL MT, NH	$ 8,645.00
48026411	SNOW PUSH 10.5FT, SSL MT, NH	$ 9,315.00
48026412	SNOW PUSH 13FT, SSL MT, NH	$ 9,980.00
48026413	SNOW PUSH 8 FT, SSL MT, CASE	$ 8,645.00
48026414	SNOW PUSH 10.5FT, SSL MT, CASE	$ 9,315.00
48026415	SNW PUSH, 13 FT, SSL MT, CASE	$ 9,980.00

48026416	SNW PUSH, 11.5 FT BSE UNT CASE	$ 11,796.00
48026417	SNOW PUSH, 14FT BASE UNIT CASE	$ 12,464.00
48026418	SNOW PUSH, 17 FT BASE UNT CASE	$ 13,688.00
48026419	KIT, BUCKET MOUNT, WL	$ 725.00
48026420	KIT, COUPLER MOUNT, JRB 416	$ 725.00
48026421	KIT, COUPLER MOUNT, JRB 418	$ 1,020.00
48032851	SNOW PUSH, 13FT, FFC MT, NH	$ 10,475.00
48032852	SNOW PUSH, 13FT, FFC MT, CASE	$ 10,475.00
48033938	TOP CAP - TLB - 6E	$ 2,245.00
48035217	COLD PLANNER- 12IN SF - NH	$ 11,920.00
48035218	COLD PLANNER- 16IN SF - NH	$ 12,670.00
48035219	COLD PLANNER- 16IN HF - NH	$ 19,480.00
48035220	COLD PLANNER- 18IN HF - NH	$ 20,410.00
48035221	COLD PLANNER- 24IN HF - NH	$ 22,670.00
48035222	COLD PLANNER- 30IN HF - NH	$ 26,720.00
48035223	COLD PLANNER- 36IN HF - NH	$ 31,050.00
48035234	COLD PLANNER- 16IN SF - CASE	$ 11,920.00
48035235	COLD PLANNER- 16IN SF - CASE	$ 12,670.00
48035236	COLD PLANNER- 16IN HF - CASE	$ 19,480.00
48035237	COLD PLANNER- 18IN HF - CASE	$ 20,410.00
48035238	COLD PLANNER- 24IN HF - CASE	$ 22,670.00
48035239	COLD PLANNER- 30IN HF - CASE	$ 26,720.00
48035240	COLD PLANNER- 36IN HF - CASE	$ 31,050.00
48035330	WATER- KIT	$ 440.00
48038648	UNIVERSAL- COLD PLANNER	$ 350.00
48058049	KIT- PIN/BUSHING/INSERT	$ 650.00
48058050	PIN/BUSHING KIT	$ 650.00
48058051	IT- PIN/BUSHING/INSERT	$ 650.00
48058052	KIT- MOUNT ADAPTER	$ 1,788.00
48080864	KIT- AUGER MT- CRADLE	$ 650.00
48080865	KIT- AUGER MT- CRADLE - UNIVER	$ 650.00
48114556	WR HARN CONN- UNITS W 14-PIN	$ 295.00
48114557	UNVELC CTRL KIT-UNTS W/O 14-PN	$ 270.00
48119587	DUAL GUTTER BRUSH KIT ALL POLY	$ 2,977.00
48124313	HYD POS FORK W/NURSERY SLEEVES	$ 4,245.00
48124315	KIT- TINES AND NURSERY SLEEVES	$ 2,430.00
48145926	ATTACHMENT- 3 PT ADAPTER	$ 850.00
48159717	ATT- BRM- ANGLE HYD- 72IN NH	$ 7,434.00
48159718	ATT- BRM- ANGLE HYD- 84IN NH	$ 8,410.00
48159719	ATT BRM ANGLE HYD- 72IN CASE	$ 8,190.00
48159720	ATT BRM ANGLE HYD- 84IN CASE	$ 8,410.00
48175181	72IN LASER BOX GRADER-SINGLE	$ 12,495.00
48175182	84IN LASER BOX GRADER- SINGLE	$ 12,675.00
48175183	96IN LASER BOX GRADER- SINGLE	$ 12,880.00
48175184	72IN LASER BOX GRADER- DUAL	$ 18,075.00
48175185	84IN LASER BOX GRADER- DUAL	$ 18,450.00
48175186	96IN LASER BOX GRADER- DUAL	$ 18,850.00

48175187	72IN LASER BOX GRADER- SINGLE	$ 12,495.00
48175188	84IN LASER BOX GRADER- SINGLE	$ 12,675.00
48175189	96IN LASER BOX GRADER- SINGLE	$ 12,880.00
48175190	72IN LASER BOX GRADER- DUAL	$ 18,075.00
48175191	84IN LASER BOX GRADER- DUAL	$ 18,450.00
48175192	96IN LASER BOX GRADER- DUAL	$ 18,850.00
48175206	KIT- SINGLE MAST- HARNESS	$ 740.00
48175207	KIT- DUAL MAST- HARNESS	$ 740.00
48184477	KIT- SPRING CHAIN- HD	$ 123.00
48188358	PALLET FORK FRAME ONLY	$ 840.00
48188360	PALLET FORK ASSY 42IN-2500LB	$ 1,090.00
48188361	PALLET FORK ASSY 48IN-2500LB	$ 1,100.00
48188362	PALLET FORK ASSY 42IN-4000LB	$ 1,140.00
48188363	PALLET FORK ASSY 48IN-4000LB	$ 1,170.00
48188365	PALLET FORK ASSY 42IN-5500LB	$ 1,195.00
48188366	PALLET FORK ASSY 48IN-5500LB	$ 1,215.00
48188367	SET PLT FORK TINES 42IN-2500LB	$ 270.00
48188368	SET PLT FORK TINES 48IN-2500LB	$ 275.00
51416970	ALL PLY BRSH SET 72 BROOM	$ 408.00
51416971	ALL PLY BRSH SET 84 BROOM	$ 417.00
51416972	ALL PLY BRSH SET 96 BROOM	$ 462.00
51422143	78" SCRAP GRAPPLE (LT SERIES)	$ 4,510.00
51422144	72" UTLY BRSH GRAPPLE LT-NH	$ 3,250.00
51422145	72" CNST BRSH GRAPPLE LT-NH	$ 3,745.00
51422146	78" CNST BRSH GRAPPLE LT-NH	$ 4,300.00
51422147	84" CNST BRSH GRAPPLE LT-NH	$ 4,550.00
51422157	78" SCRAP GRAPPLE LT-CASE	$ 4,510.00
51422158	72" UTLY BRSH GRAPPL LT-CASE	$ 3,250.00
51422159	72" CNST BRSH GRAPPLE LT-CASE	$ 3,745.00
51422160	78" CNST BRSH GRAPPLE LT-CASE	$ 4,300.00
51422161	84" CNST BRSH GRAPPLE LT-CASE	$ 4,550.00
51422413	60 VS VC PK-UP BRM W PLY WR BR	$ 11,130.00
51422414	72 VS VC PK-UP BRM W PLY WR BR	$ 12,140.00
51422415	84 VS VC PK-UP BRM W PLY WR BR	$ 13,020.00
51422416	60 VS VC PK-UP BRM W PLY WR BR	$ 11,130.00
51422417	72 VS VC PK-UP BRM W PLY WR BR	$ 12,140.00
51422418	84 VS VC PK-UP BRM W PLY WR BR	$ 11,988.00
51426760	BKT GP 75IN 1.0YD W/O TEETHCWL	$ 2,292.00
51426761	BKT GP 83IN 1.1YD W/O TEETHCWL	$ 2,428.00
51426763	BKT GP 83IN 1.1YD W/TEETH CWL	$ 2,730.00
51426764	BKT GP 83IN 1.25YD W/OTEETHCWL	$ 3,148.00
51426765	BKT GP 83IN 1.25YD W/TEETH CWL	$ 3,410.00
51426766	BKT GP 83IN 1.6YD W/OTEETH CWL	$ 3,262.00
51426769	BUCKET LM 96IN 1.5YD CWL	$ 2,791.00
51426770	BUCKET LM 96IN 2.0YD CWL	$ 2,800.00
51427322	KIT- FRT WINDOW GRD STEEL MESH	$ 2,082.00
51427323	KIT- FRT WINDOW GRD- LEXAN	$ 3,111.00

51427324	KIT- FRT WINDOW GRD STEEL MESH	$ 2,082.00
51427325	KIT- FRT WINDOW GRD- LEXAN	$ 3,111.00
51429129	KIT- HOSE- 85IN	$ 300.00
51453848	KIT- CYLINDER GUARD	$ 116.00
51469709	BRM PICKUP 215 HOPPR 60IN-NH	$ 5,008.00
51469710	BRM PICKUP 215 HOPPR 72IN-NH	$ 5,444.00
51469713	BRM PICKUP 215 HOPPR 84IN-NH	$ 5,881.00
51469714	BRM PICKUP 215 HOPPR 60IN-CASE	$ 5,008.00
51469715	BRM PICKUP 215 HOPPR 72IN-CASE	$ 5,444.00
51469717	BRM PICKUP 215 HOPPR 84IN-CASE	$ 5,881.00
51472130	MULCHER HEAD - EHF/HF - NH	$ 31,331.00
51472131	MULCHER HEAD - EHF/HF - CASE	$ 31,331.00
51472133	KIT- DEFLECTOR DOOR- EHF- HYD	$ 3,179.00
51472134	KIT DFLCTR DOOR HF 14-PIN ELEC	$ 4,203.00
51498693	72" LARGE CAP GRAPPLE - NH	$ 4,600.00
51498694	84" LARGE CAP GRAPPLE - NH	$ 4,800.00
51498695	72" LARGE CAP GRAPPLE-CASE	$ 4,600.00
51498696	84" LARGE CAP GRAPPLE-CASE	$ 4,800.00
51498697	72" LARGE CAP BUCKET GRP-NH	$ 4,900.00
51498698	84" LARGE CAP BUCKET GRP-NH	$ 5,150.00
51498699	72" LARGE CAP BUCKET GRP-CIH	$ 4,900.00
51498700	84" LARGE CAP BUCKET GRP-CIH	$ 5,150.00
51498734	72" LARGE CAP GRAPPLE-NH	$ 5,900.00
51498735	84" LARGE CAP GRAPPLE-NH	$ 6,200.00
51498737	72" LARGE CAP GRAPPLE-CIH	$ 5,900.00
51498738	84" LARGE CAP GRAPPLE-CIH	$ 6,200.00
51499028	CH-190 COMPLETE PKG FOR CX300C	$ 66,680.00
51519252	TRENCHER 625-36IN R&F - NH	$ 6,294.00
51519264	TRENCHER 625-36IN R&F - CASE	$ 6,294.00
51571342	TOP CAP - CH-310/CX500D ME	$ 5,995.00
51571343	CH-310 COMPLETE PKG FOR CX500D ME	$ 115,000.00
73343737	CH310 HAMMER- INCLUDES EXTRA T	$ 94,382.00
73343738	CH6E HAMMER- INCLUDES EXTRA TO	$ 23,345.00
73343739	CH5M HAMMER- INCLUDES EXTRA TO	$ 14,726.00
73343740	CH151 HAMMER- INCLUDES EXTRA T	$ 65,842.00
73343744	CH230 HAMMER INCLUDES HOSE KIT	$ 95,810.00
73343745	CH190 HAMMER- INCLUDES: TOP CA	$ 78,450.00
84124630	SINGLE GUTTER BRUSH KIT- VRS	$ 1,620.00
84124631	DUAL GUTTER BRUSH KIT- VRS	$ 3,130.00
84139146	JIB BOOM EXTENDABLE 4'-7'	$ 5,140.00
84139147	JIB BOOM EXTENDABLE 8'-12'	$ 6,486.00
84139937	FORKS- 48" ADJUSTABLE	$ 6,150.00
84139938	FORKS- 60" ADJUSTABLE	$ 6,368.00
84142925	SNOW PUSHER- 120"	$ 4,621.00
84142926	SNOW PUSHER- 96"	$ 4,079.00
84143724	J-HOOK- SPECIAL ATTACH TO QC	$ 1,120.00
84143734	BUCKET- PIN-ON- 4X1- 90"	$ 8,000.00

84149584	BOX SCRAPER- 88" NH	$ 5,800.00
84149585	BOX SCRAPER- 88" CASE	$ 5,800.00
84150222	BACKHOE- 509	$ 10,676.00
84150223	RUBBER PADS- 485	$ 150.00
84150225	STABILIZERS- VERT. 6100- 6120	$ 1,670.00
84150226	STABILIZERS- VERT. 6100- 6120	$ 2,362.00
84150228	BUCKET- 12"	$ 920.00
84150229	BUCKET- 16"	$ 1,000.00
84150230	BUCKET- 18"	$ 1,030.00
84150231	BUCKET- 24"	$ 1,080.00
84150232	BUCKET- 34"	$ 1,320.00
84150233	BUCKET- 36"	$ 1,350.00
84150234	BUCKET- 38"	$ 1,440.00
84150409	BUCKET QC- C&P	$ 1,260.00
84150410	BUCKET QC- C&P- 6100- 6120	$ 1,320.00
84150411	HYDR KIT- 2 WAY- 6100	$ 1,500.00
84150412	HYDR KIT- 2 WAY- FIELD- 6100	$ 1,210.00
84150413	HYDR KIT- 2 WAY- 6120	$ 1,650.00
84150414	HYDR KIT- 2 WAY- FIELD- 6120	$ 1,340.00
84150419	THUMB- KNUCKLE ARM- 6100- 6120	$ 1,450.00
84150420	THUMB- KNUCKLE ARM- 6100- 6120	$ 1,300.00
84150422	THUMB- HYDRAULIC- 6100- 6120	$ 1,700.00
84150423	THUMB- HYDRAULIC- 6100- 6120	$ 1,740.00
84160162	POWER BOX RAKE- M6 MANUAL	$ 10,310.00
84160163	POWER BOX RAKE- M6 HYDR	$ 11,530.00
84160164	POWER BOX RAKE- MX7 MANUAL	$ 10,880.00
84160165	POWER BOX RAKE- MX7 HYDR	$ 12,190.00
84160166	POWER BOX RAKE- MX8 MANUAL	$ 11,790.00
84160167	POWER BOX RAKE- MX8 HYDR	$ 12,880.00
84160168	CONTROL HARNESS- PWR BOX RAKE	$ 370.00
84160170	POWER BOX RAKE- M6 MANUAL	$ 10,310.00
84160171	POWER BOX RAKE- M6 HYDR	$ 11,530.00
84160172	POWER BOX RAKE- MX7 MANUAL	$ 10,880.00
84160173	POWER BOX RAKE- MX7 HYDR	$ 12,190.00
84160175	POWER BOX RAKE- MX8 HYDR	$ 12,880.00
84161855	ONBOARD SCALE PKG- LL800I	$ 6,037.00
84161856	ONBOARD SCALE PKG- LL8000I	$ 7,486.00
84161857	ONBOARD SCALE PKG- LL800I	$ 6,037.00
84161858	ONBOARD SCALE PKG- LL8000I	$ 7,486.00
84161859	ONBOARD SCALE PRINTER PKG	$ 1,069.00
84176115	KIT- HYD QUICK COUPLER	$ 4,190.00
84188884	BROOM. SB HOPPER- 60 IN.	$ 5,260.00
84188885	BROOM. SB HOPPER- 72 IN.	$ 5,720.00
84188886	BROOM. SB HOPPER- 84 IN.	$ 6,180.00
84188887	BROOM. SB HOPPER- 60 IN.	$ 5,260.00
84188888	BROOM. SB HOPPER- 72 IN.	$ 5,720.00
84188889	BROOM. SB HOPPER- 84 IN.	$ 6,180.00

84188890	SINGLE GUTTER BRUSH KIT- SB	$ 1,620.00
84192909	SEGMENT KIT-100"W/BOLTON TEETH	$ 620.00
84192910	SEGMENT KIT-102"W/BOLTON TEETH	$ 570.00
84192911	SEGMENT KIT-106"W/BOLTON TEETH	$ 975.00
84192912	SEGMENT KIT-119"W/BOLTON TEETH	$ 1,605.00
84192913	SEGMENT KIT-126"W/BOLTON TEETH	$ 1,150.00
84195956	BKT- S DISCH SAND 60" NH	$ 6,180.00
84195957	BKT- S DISCH SAND 72" NH	$ 8,260.00
84195958	BKT- S DISCH SAWDUST 72" NH	$ 8,720.00
84195959	BKT- S DISCH SAWDUST 84" NH	$ 10,960.00
84195960	BKT- S DISCH SAND 60" CASE	$ 6,180.00
84195961	BKT- S DISCH SAND 72" CASE	$ 8,260.00
84195962	BKT- S DISCH SAWDUST 72" CASE	$ 8,720.00
84195963	BKT- S DISCH SAWDUST 84" CASE	$ 10,960.00
84211231	KIT- MANUAL QUICK COUPLER	$ 2,770.00
84211232	KIT- AUX HOSE/QD	$ 870.00
84215691	BROOM- ANGLE 72" NH SSL	$ 6,610.00
84215692	BROOM- ANGLE 84" NH SSL	$ 6,830.00
84215693	BROOM- ANGLE 96" NH SSL	$ 7,050.00
84215694	BROOM- ANGLE 72" CASE SSL	$ 6,610.00
84215695	BROOM- ANGLE 84" CASE SSL	$ 6,830.00
84215696	BROOM- ANGLE 96" CASE SSL	$ 7,050.00
84215697	KIT- HYD ANGLE SSL UNIVERSAL	$ 1,420.00
84215698	KIT- HYD ANGLE SSL 14 PIN	$ 1,600.00
84215699	KIT- HYD ANGLE SSL 2ND AUX	$ 550.00
84215700	BROOM- ANGLE 96" NH MECH TLB	$ 15,350.00
84215701	BROOM- ANGLE 96" NH PILOT TLB	$ 15,620.00
84215702	BROOM- ANGLE 96" CASE TLB	$ 15,620.00
84215703	BROOM- ANGLE 96" NH CWL	$ 15,350.00
84215704	BROOM- ANGLE 108" NH CWL	$ 15,990.00
84215705	BROOM- ANGLE 96" CASE CWL	$ 15,350.00
84215706	BROOM- ANGLE 108" CASE CWL	$ 15,990.00
84215707	KIT- MANUAL ANGLE	$ 340.00
84215708	KIT HYD ANGLE	$ 2,020.00
84215709	BROOM- ANGLE- 96" NH WL	$ 17,480.00
84215710	BROOM- ANGLE- 108" NH WL	$ 18,120.00
84215711	BROOM- ANGLE- 108" NH TLH	$ 15,320.00
84215713	BROOM- ANGLE 108" CASE TLH	$ 15,320.00
84218737	FARM FORK- 60" NH	$ 1,800.00
84218738	FARM FORK- 66" NH	$ 1,930.00
84218739	FARM FORK- 72" NH	$ 2,020.00
84218740	FARM FORK- 84" NH	$ 3,240.00
84218741	FARM FORK- 60" CASE	$ 1,800.00
84218742	FARM FORK- 66" CASE	$ 1,930.00
84218743	FARM FORK- 72" CASE	$ 2,020.00
84218744	FARM FORK- 84" CASE	$ 3,240.00
84218745	GRAPPLE- FARM FORK- CASE	$ 2,010.00

84225454	GRAPPLE- FARM FORK- NH	$	2,010.00
84225455	MANURE SCRAPER- 60" NH	$	1,500.00
84225456	MANURE SCRAPER- 72" NH	$	1,550.00
84225457	MANURE SCRAPER- 84" NH	$	1,330.00
84225458	MANURE SCRAPER- 96" NH	$	1,720.00
84225459	MANURE SCRAPER- 60" CASE	$	1,460.00
84225460	MANURE SCRAPER- 72" CASE	$	1,550.00
84225461	MANURE SCRAPER- 84" CASE	$	1,330.00
84225462	MANURE SCRAPER- 96" CASE	$	1,670.00
84257966	TILT ATTACH HD W/DIVERTER NH	$	4,970.00
84257968	TILT ATTACH HD W/DIVERTER CASE	$	4,970.00
84257970	UNIVERSAL CNTRL TILT ATTACH	$	550.00
84257971	ADAPTER 14 PIN TILT ATTACH	$	370.00
84258059	POST DRIVER MODEL PD4800 NH	$	7,580.00
84258061	POST DRIVER MODEL PD4800 CASE	$	7,580.00
84258062	SQ COLLAR STRIKER PLATE 3.5"	$	870.00
84258063	SQ COLLAR STRIKER PLATE 6"	$	840.00
84258064	SQ COLLAR STRIKER PLATE 8"	$	1,010.00
84258065	COLLAR STRIKER PLATE 6"X8"	$	840.00
84258066	ROUND COLLAR 3"	$	380.00
84258067	SQUARE COLLAR 3.5"	$	380.00
84258068	ROUND COLLAR 4"	$	380.00
84258070	H BEAM COLLAR 4"X6"	$	380.00
84258071	ROUND COLLAR 6"	$	380.00
84258073	SQUARE COLLAR 6"	$	380.00
84258074	SQUARE COLLAR 8"	$	380.00
84258076	COLLAR 6"X8"	$	390.00
84258078	T POST ADAPTER	$	180.00
84258173	COUPLER- MANUAL N SERIES	$	2,490.00
84258175	AUXILIARY HYD QD HOSE KIT	$	630.00
84270393	SIDESHIFT CARRIAGE 48" NH TLH	$	6,190.00
84270394	SIDESHIFT CARRIAGE 60" NH TLH	$	6,370.00
84271094	TILT CARRIAGE- 72" NH TLH	$	5,470.00
84274989	BROOM COLLECTOR 84" SINGLE NH	$	12,880.00
84274990	BROOM COLLECTOR 84" DUAL NH	$	14,350.00
84274991	BROOM COLLECTOR 96" SINGLE NH	$	14,830.00
84274992	BROOM COLLECTOR 96" DUAL NH	$	15,990.00
84274993	BROOM COLLECTOR 84" CASE	$	14,350.00
84274994	BROOM COLLECTOR 96" CASE	$	15,990.00
84274995	GUTTER BRUSH KIT WIRE SINGLE	$	2,170.00
84274997	GUTTER BRUSH KIT POLY SINGLE	$	2,170.00
84274998	DUST CONTROL KIT 25 GAL	$	1,230.00
84281638	MARKER KIT	$	120.00
84300700	CUTTING EDGE- BOLT-ON 90"	$	630.00
84315258	KIT- THUMB- STD DIPPER- HD BU	$	5,360.00
84315259	KIT- THUMB- STD DIPPER- HI-CA	$	5,360.00
84315261	KIT- THUMB- E-HOE- HD BUCKETS	$	5,230.00

84315262	KIT- THUMB- E-HOE- HI-CAP BUC	$	5,230.00
84316806	WEIGHLOG 200 NH SS	$	3,686.00
84316807	WEIGHLOG 100 CASE SS	$	2,652.00
84316808	WEIGHLOG 200 CASE SS	$	3,686.00
84316809	WEIGHLOG 200 CASE/NH CWL	$	3,686.00
84316810	PRINTER KIT WEIGHLOG 200	$	1,069.00
84324905	BKT 2.75YD GP BO EDGES	$	5,668.00
84324906	BKT 2.75YD GP BO TEETH	$	7,014.00
84332178	PALLET FORK ASSY- 42" TINES NH	$	1,080.00
84332180	PALLET FORK ASSY- 42? TINES CA	$	1,080.00
84332181	PALLET FORK ASSY- 48" TINES	$	1,130.00
84332182	FRAME- PALLET FORK	$	649.00
84332183	42" TINE SET	$	375.00
84332184	48" TINE SET	$	400.00
84343747	BROOM- ANGLE 96" CASE WL	$	17,480.00
84343748	BROOM- ANGLE 108" CASE WL	$	18,120.00
84343749	BROOM- ANGLE 120" CASE WL 721E	$	20,020.00
84343750	BROOM- ANGLE 120" CASE WL 821E	$	20,080.00
84348692	FRAME- PALLET FORK	$	632.00
84348693	FRAME- PALLET FORK	$	632.00
84354434	PLT FRK ASSY STD 42? NH	$	1,025.00
84354436	PLT FRK ASSY STD 48"NH	$	1,060.00
84354438	PLT FRK ASSY STD 42" CASE	$	1,025.00
84354439	PLT FRK ASSY STD 48" CASE	$	1,060.00
84354440	42" STD TINE SET	$	350.00
84354441	48" STD TINE SET	$	375.00
84366809	PEDULUM MOUNT	$	1,010.00
84367232	CRADLE MOUNT	$	550.00
84371006	BUCKET- 4X1- 82" CASE	$	7,980.00
84371007	BUCKET- 4X1- 93" CASE	$	6,376.00
84372934	ELECTRIC CONTROL KIT	$	250.00
84375436	SET- POLY/WIRE BRUSHES 60IN	$	450.00
84375437	SET- POLY/WIRE BRUSHES 72IN	$	530.00
84375438	SET- POLY/WIRE BRUSHES 84IN	$	630.00
84376837	POLYWIRE- CS BROOM 96IN	$	690.00
84376838	SET- POLY/WIRE BRUSHES 96IN	$	410.00
84376839	POLY/WIRE BRUSH 84 IN	$	480.00
84376840	POLY/WIRE BRUSH 96 IN	$	540.00
84376841	POLYWIRE ANGLE BROOM 108IN	$	630.00
84376842	POLYWIRE ANGLE BROOM 120IN	$	940.00
84397477	ADAPTER- SSL ATTACHMENT- BLANK	$	240.00
84397478	HEAVY DUTY ADAPTER- SSL ATTACH	$	310.00
84399981	KIT WATER TANK ROOF MOUNT	$	1,580.00
84406432	STEEL TRACKS- F-SERIES	$	2,607.00
84412543	TILLER HT52 - 52" 14-17 GPM N	$	5,980.00
84412544	TILLER HT66 - 66" 14-17 GPM NH	$	6,570.00
84412545	TILLER HT52- 14-17 GPM - CASE	$	5,980.00

84412546	TILLER HT66- 14-17 GPM - CASE	$	6,570.00
84415882	HYDRAULIC COUPLER	$	4,190.00
84415883	HYDRAULIC COUPLER	$	4,320.00
84420962	BACKHOE MOUNTING KIT	$	2,320.00
84420963	BACKHOE MOUNTING KIT	$	2,720.00
84420965	BACKHOE MOUNTING KIT	$	2,560.00
84420966	BACKHOE MOUNTING BRACKET	$	420.00
84420967	BACKHOE MOUNTING BRACKET	$	450.00
84421421	SNOWBLOWER- 72" DUAL 19-34 NH	$	13,150.00
84421422	SNOWBLOWER- 84" DUAL 19-34 NH	$	13,820.00
84421423	SNOWBLOWER- 84" DUAL 30-42 NH	$	14,690.00
84421424	SNOWBLOWER- 96" DUAL 30-42 NH	$	14,950.00
84421425	SNOWBLOWER- 60" 12 - 15 GPM NH	$	7,650.00
84421426	SNOWBLOWER- 60" 14 - 21 GPM NH	$	7,780.00
84421427	SNOWBLOWER- 72" 14 - 21 GPM NH	$	7,970.00
84421428	SNOWBLOWER- 72" 18 - 27 GPM NH	$	8,410.00
84421429	SNOWBLOWER- 84" 18 - 27 GPM NH	$	8,640.00
84421455	SNOWBLOWER- 72" HI FLOW CASE	$	13,150.00
84421456	SNOWBLOWER- 84" HI FLOW CASE	$	13,820.00
84421457	SNOWBLOWER- 60" STD FLOW CASE	$	7,780.00
84421458	SNOWBLOWER- 72" STD FLOW CASE	$	7,970.00
84421459	SNOWBLOWER-- 72" STD FLOW CASE	$	8,410.00
84421460	SNOWBLOWER- 84" STD FLOW CASE	$	8,640.00
84421461	TRENCHER- 640 HI FLOW 29-35 NH	$	5,500.00
84421969	TRENCHER 640 HF 25-28 CASE	$	5,500.00
84424994	COLD PLANER HP40 40" 31-35 NH	$	31,150.00
84426158	WHEEL SPACER KIT 1.5"	$	451.00
84426159	WHEEL SPACER KIT 2"	$	504.00
84466100	BACKHOE MOUNTING BRACKET	$	440.00
84512810	WEIGHLOG 100 SCALE-SSL	$	2,768.00
84512811	WEIGHLOG 200 SCALE-SSL	$	3,807.00
84514060	EXTENSION- AUGER H200 X 48"	$	270.00
84518504	KIT REAR STABILIZER MID FRAME	$	2,880.00
84518505	KIT REAR STABILIZER LARGE FRAM	$	2,660.00
84518506	KIT HYD REAR STABILIZER RADIAL	$	450.00
84518507	KIT HYD REAR STABILIZER VERTIC	$	510.00
84523770	MULCHER EHF DBL CARBIDE TEETH	$	37,380.00
84523771	MULCHER EHF DBL CARBIDE TEETH	$	37,380.00
84523773	EHF PLANER HP24-24"(31-35 GPM)	$	25,740.00
84523774	EHF PLANER HP30-30"(31-35 GPM)	$	26,740.00
84523775	EHF PLANER HP40-40"(31-35 GPM)	$	32,810.00
84523776	EHF PLANER HP24-24"(31-35 GPM)	$	25,740.00
84523778	EHFPLANER HP30-30" (31-35 GPM)	$	26,740.00
84523780	EHF PLANER HP40-40"(31-35 GPM)	$	32,810.00
84523781	EHF ROCK SAW- RS18- 18"	$	21,550.00
84523783	EHF ROCK SAW- RS24- 24"	$	26,190.00
84523784	EHF ROCK SAW- RS18- 18"	$	21,550.00

84523785	EHF ROCK SAW- RS24- 24"	$ 26,190.00
84539370	PLANER HP16 - 16" (22-28 GPM)	$ 20,350.00
84539371	PLANER HP18 - 18" (22-28GPM)	$ 21,090.00
84539372	PLANER HP16 - 16" (31-35 GPM)	$ 20,410.00
84539373	PLANER HP18 - 18" (31-35 GPM)	$ 20,780.00
84539374	PLANER HP24 - 24" (31-35 GPM)	$ 24,460.00
84539375	PLANER HP30 - 30" (31-35 GPM)	$ 25,010.00
84539376	PLANER HP40 - 40" (31-35 GPM)	$ 31,480.00
84539377	PLANER HP16 - 16" (22-28 GPM)	$ 20,350.00
84539378	PLANER HP18 - 18" (22-28GPM)	$ 21,090.00
84539379	PLANER HP16 - 16" (31-35 GPM)	$ 20,410.00
84539380	PLANER HP18 - 18" (31-35 GPM)	$ 20,780.00
84539381	PLANER HP24 - 24" (31-35 GPM)	$ 24,460.00
84539382	PLANER HP30 - 30" (31-35 GPM)	$ 25,010.00
84539383	PLANER HP40 - 40" (31-35 GPM)	$ 31,480.00
84546390	HYD-REAR STABLILIZER- RAD	$ 260.00
84546391	HYD-REAR STABILIZER-VERT	$ 560.00
84553733	SET- TEETH DOUBLE CARBIDE MM60	$ 6,170.00
84553734	SET- TEETH DOUBLE CLAW MM60	$ 2,430.00
84554133	MULCHER EHF DBL CLAW TEETH NH	$ 33,530.00
84554134	MULCHER EHF DBL CLAW TEETH CAS	$ 33,530.00
84586157	HEX HUB	$ 50.00
84586158	HEX RECEIVER	$ 50.00
84586159	BEARINGS	$ 30.00
84586160	BEARING	$ 50.00
84586161	HYDRAULIC MANIFOLD	$ 870.00
84586162	DEFECTOR CYLINDER	$ 250.00
84586169	CYLINDER SEAL	$ 40.00
84586170	TENSION SPRING	$ 30.00
84586173	STEEL EDGE KIT	$ 190.00
84586176	PLANETARY GEARBOX SEAL KIT	$ 20.00
84586178	GASKET	$ 10.00
84586179	WISDOM TOOTH	$ 10.00
84586180	GAGE TOOTH	$ 10.00
84586181	FISH TAIL POINT	$ 50.00
84586194	SINGLE BEVEL EDGE	$ 530.00
84592481	SNOW BLOWER 72IN HF - NH	$ 11,410.00
84592483	SNOW BLOWER 84IN HF - NH	$ 11,940.00
84592484	SNOW BLOWER 96IN HF - NH	$ 13,940.00
84592485	SNOW BLOWER 72IN HF- CASE SSL	$ 11,410.00
84592487	SNOW BLOWER 72IN HF- CASE SSL	$ 14,460.00
84592489	SNOW BLOWER 84IN HF- CASE SSL	$ 11,940.00
84592491	SNOW BLOWER 84IN HF- CASE SSL	$ 14,690.00
84592493	SNOW BLOWER 96IN HF- CASE SSL	$ 14,950.00
84604114	JIB BOOM - 7'- 11'	$ 6,397.00
84604180	JIB BOOM - 8'- 12'	$ 7,013.00
84604286	102" - 2.75 YD W/CUTTING EDGE	$ 6,898.00

84604287	102"-2.75YD GP BUCKET W/TEETH	$	7,103.00
84604379	JIB BOOM - 8'- 12'	$	6,943.00
85819301	QUICK-COUPLING- HYD- MAL	$	2,500.00
85819302	QUICK-COUPLING- HYD- MAL	$	450.00
85819306	108" SNOW BLADE	$	5,700.00
85819307	120" SNOW BLADE	$	5,770.00
85819308	BUCKET- COUPLER- 4X1- 90"	$	8,000.00
85819309	LIFT BOOM	$	2,060.00
85819317	BUCKET- COUPLER- GP- 88"	$	2,950.00
85819323	COUPLER, HYDRAULIC (LB/B/BB/BC Series Loader-Backhoes, except TC and 115)	$	4,200.00
85819330	SCAP GRAPPLE- COUPLER- HD-83"	$	8,680.00
86547400	BACKING CENTRE	$	180.00
86547423	PADS- RUBBER STREET	$	650.00
86547424	PADS- FLIP OVER	$	830.00
86547428	BUCKET- POWER DIG- 10"	$	540.00
86547429	BUCKET- POWER DIG- 12"	$	590.00
86547430	BUCKET- POWER DIG- 16"	$	630.00
86547431	BUCKET- POWER DIG- 18"	$	660.00
86547432	BUCKET- POWER DIG- 24"	$	680.00
86563455	AUTO RAKE- 63.5"	$	11,330.00
86563456	AUTO RAKE- 73.5"	$	12,530.00
86568601	BUCKET- POWER DIG- 12"	$	940.00
86568602	BUCKET- POWER DIG- 16"	$	970.00
86568603	BUCKET- POWER DIG- 18"	$	1,000.00
86568604	BUCKET- POWER DIG- 24"	$	1,050.00
86576176	CONCRETE BRKR ATTACH-HD-12	$	236.00
86576177	METAL POST HOLDER-HD-12	$	86.00
86576810	WHEEL SPACER KIT	$	451.00
86590026	PADS- STANDARD DIRT	$	230.00
86590027	PADS- RUBBER STREET	$	470.00
86590028	PAD SET- FLAT	$	260.00
86602638	WIRING ADAPTER KIT	$	103.00
86619370	WATER KIT PACKAGE	$	2,590.00
86619371	MOUNTING ADAPTER KIT	$	420.00
86619372	NOZZLE KIT	$	210.00
86619893	REAR STABIIZER PKG	$	2,860.00
86619894	MOUNTING KIT	$	660.00
86619895	MOUNTING KIT	$	880.00
86619896	HOSE KIT	$	260.00
86619897	HOSE KIT	$	840.00
86619898	HOSE & VALVE KIT	$	1,110.00
86619899	BRACKETS- WEIGHT KIT	$	300.00
86619967	RIPPER TOOTH	$	600.00
86620002	LIFT BOOM	$	1,510.00
86620051	TRENCHER- 625	$	4,180.00

86620052	BOOM & CRUMBER- 30"	$	640.00
86620053	BOOM & CRUMBER- 36"	$	680.00
86620054	BOOM & CRUMBER- 42"	$	710.00
86620055	BOOM & CRUMBER- 48"	$	740.00
86620056	HYDRAULIC SIDESHIFT	$	840.00
86621857	CHAIN ASSY- 6 X 30- R&F	$	1,910.00
86621858	CHAIN ASSY- 6 X 36- R&F	$	2,000.00
86621859	CHAIN ASSY- 6 X 42- R&F	$	2,240.00
86621860	CHAIN ASSY- 6 X 48- R&F	$	2,410.00
86627301	SNOW PUSH- 96"	$	-
86627302	SNOW PUSH- 120"	$	4,621.00
86635073	BLADE- SNOW- HYD ANGLE 5'	$	3,580.00
86635074	BLADE- SNOW- HYD ANGLE 6'	$	3,670.00
86635075	BLADE- SNOW- HYD ANGLE 7'	$	3,760.00
86635076	BLADE- SNOW- HD HYD ANGLE 7'	$	4,780.00
86635077	BLADE- SNOW- HD HYD ANGLE 8'	$	4,980.00
86635078	BLADE- SNOW- HD HYD ANGLE 9'	$	5,100.00
86635079	BLADE- SNOW- HD HYD ANGLE 7'	$	5,190.00
86635080	BLADE- SNOW- HD HYD ANGLE 8'	$	5,470.00
86635081	BLADE- SNOW- HD HYD ANGLE 9'	$	5,760.00
86637837	POWER BOX RAKE- M6- 72"8	$	8,152.00
86640923	GRAPPLE FORK- 43"	$	2,670.00
86837653	ELECTRICAL CONTROL PKG	$	310.00
86900289	ROCK BUCKET- 66" 3 TINE	$	1,960.00
86900290	ROCK BUCKET- 75"- 3" SPACING	$	2,130.00
86977896	AUGER DRIVE- GEAR- X1475R256	$	2,770.00
86977897	AUGER DRIVE- GEAR- X1475H200	$	2,770.00
86977899	AUGER DRIVE- GEAR- X1975R256	$	2,950.00
86977900	DEFLECTOR CANE R.H.	$	2,950.00
86982389	BOX SCRAPER- 84"	$	5,410.00
86982428	HOSE AND QD KIT	$	630.00
86985126	HARNESS- ELECTRIC CNTRL	$	470.00
86985127	HARNESS- ELECTRIC 8 PIN	$	304.00
86985128	ELECTRIC CONTROL KIT	$	490.00
87013919	RT OR LT GUTTER BRUSH FOR BDC	$	2,990.00
87015253	DOZER BLADE- PL1300- 72"	$	5,530.00
87015254	DOZER BLADE- PL1300- 84"	$	5,620.00
87015255	DOZER BLADE- PL1300- 96"	$	5,715.00
87015256	UNIVERSAL WIRING KIT	$	78.00
87023319	WIRE HARNESS ADAPTER	$	190.00
87023320	UNIVERSAL ELECT. CNTRL PKG	$	190.00
87026357	ONBOARD SCALE PKG- WL100	$	2,652.00
87027534	CONCRETE CHUTER(0.5YD)	$	2,750.00
87027535	CONCRETE CHUTER(0.75YD)	$	2,980.00
87027537	POST PULLER- P1200	$	6,000.00
87027538	ROCK BUCKET- 66" 2 TINE	$	2,170.00
87027539	ROCK BUCKET- 75"- 2" SPACING	$	2,250.00

87027540	ROCK BUCKET- 84"- 3" SPACING	$	2,250.00
87027549	CHAIN ASSY- 6 X 30 SHARK/CUP	$	1,020.00
87027550	CHAIN ASSY- 6 X 30 FULL SHARK	$	1,150.00
87027551	CHAIN ASSY- 6 X 36 SHARK/CUP	$	1,320.00
87027552	CHAIN ASSY- 6 X 36 FULL SHARK	$	1,350.00
87027553	CHAIN ASSY- 6 X 42 SHARK/CUP	$	1,330.00
87027554	CHAIN ASSY- 6 X 42 FULL SHARK	$	1,540.00
87027555	CHAIN ASSY- 6 X 48 SHARK/CUP	$	1,400.00
87027556	CHAIN ASSY- 6 X 48 FULL SHARK	$	1,660.00
87027565	CHAIN ASSY- 6 X 60 SHARK/CUP	$	1,780.00
87028450	POST DRIVER- HD-10SC	$	11,200.00
87028451	POST DRIVER- HD-12SC	$	12,901.00
87032746	SPRAY BAR KIT	$	190.00
87034072	BACKHOE- 511	$	-
87034086	STABILIZERS- VERTICAL	$	950.00
87034088	BUCKET ADAPTER- C&P	$	1,370.00
87034089	THUMB- KNUCKLE ARM	$	1,460.00
87034090	THUMB- HYDRAULIC	$	1,810.00
87034091	AUXILIARY HYDRAULIC KIT- 2-WAY	$	2,110.00
87034107	BUCKET- POWER DIG- 20"	$	1,040.00
87034108	BUCKET- POWER DIG- 36"	$	1,350.00
87034109	HAMMER BRACKET ADAPTER	$	430.00
87034110	BUCKET- HEAVY DUTY- 12"- C&P	$	1,090.00
87034112	BUCKET- HEAVY DUTY- 18"- C&P	$	700.00
87034115	BUCKET- HEAVY DUTY- 24"- C&P	$	820.00
87034116	BUCKET- HEAVY DUTY- 20"- C&P	$	900.00
87034117	BUCKET- HEAVY DUTY- 36"- C&P	$	1,030.00
87034118	BUCKET- DITCH CLEANING- 30"	$	1,030.00
87034119	BUCKET- DITCH CLEANING- 36"	$	1,140.00
87034120	RIPPER TOOTH- C&P 027	$	660.00
87034121	HAMMER BRACKET ADAPTER- C&P	$	591.00
87034122	AUGER ADAPTER- C&P 027	$	760.00
87034123	BUCKET ADAPTER- C&P	$	1,195.00
87034124	KNUCKLE ARM THUMB- RIGID	$	1,031.00
87034125	KNUCKLE ARM THUMB- RIGID	$	1,310.00
87034126	HYDRAULIC THUMB	$	1,245.00
87034127	THUMB- HYDRAULIC	$	1,660.00
87034128	AUXILIARY HYDRAULIC KIT- 2-WAY	$	1,600.00
87034129	VERTICAL STABILIZER PKG- FIELD	$	2,080.00
87041240	BUCKET- LM- 50"	$	1,110.00
87041241	SNOW BLADE- 60"	$	3,806.00
87041242	BUCKET- 4X1- 42"	$	2,390.00
87041244	PALLET FORK	$	860.00
87041245	FORK- NURSERY	$	1,330.00
87041257	LEVELER/CARRIER	$	700.00
87041258	MULTI-TASK TOOL	$	595.00
87041260	DOZER BLADE- 48"	$	1,790.00

87041261	AUGER DRIVE- 2.00 HEX	$ 2,550.00
87041262	AUGER DRIVE- 256 RD	$ 2,550.00
87042591	AUGER DRIVE- GEAR- X1475R256	$ 2,770.00
87042592	AUGER DRIVE- GEAR- X1475H200	$ 2,770.00
87042593	AUGER DRIVE- GEAR- X1975R256	$ 2,950.00
87042594	AUGER DRIVE- GEAR- X1975H200	$ 2,950.00
87042596	ADAPTER- 2 HEX F TO 2 RD M	$ 240.00
87042597	ADAPTER- 256 RD F TO 2 RD M	$ 140.00
87042598	AUGER EXTENSION- 12X256 RD	$ 150.00
87042600	AUGER EXTENSION- 24X256 RD	$ 200.00
87042601	AUGER EXTENSION- 12X2 HEX	$ 190.00
87042602	AUGER EXTENSION- 24X2 HEX	$ 220.00
87043683	60" PICKUP BROOM SINGLE MOTOR	$ 6,730.00
87043685	72" PICKUP BROOM SINGLE MOTOR	$ 9,440.00
87045452	COLD PLANER- SP12MC	$ 10,910.00
87045453	COLD PLANER- SP12HC	$ 13,430.00
87045454	COLD PLANER- HP16HC	$ 19,634.00
87045455	COLD PLANER- HP18HC	$ 20,302.00
87045456	COLD PLANER- HP24HC	$ 22,936.00
87045457	COLD PLANER- HP30HC	$ 24,193.00
87045458	DRUM- 2.5" FOR SP12	$ 1,460.00
87045459	DRUM- 2.5"	$ 1,940.00
87045460	DRUM- 4"	$ 1,970.00
87045461	DRUM- 6"	$ 2,340.00
87045462	WATER NOZZLE KIT	$ 300.00
87045463	SILAGE DEFACER	$ 6,510.00
87045464	SCRAP GRAPPLE- 42"	$ 2,370.00
87045465	ROCK BUCKET- 42"	$ 1,190.00
87045466	CONCRETE CLAW	$ 2,590.00
87045489	CONCRETE CLAW	$ 2,590.00
87045796	SILAGE DEFACER	$ 6,510.00
87046035	POWER BOX RAKE- MX7- 84"	$ 8,642.00
87046036	POWER BOX RAKE- MX8- 90"	$ 9,501.00
87046039	POWER BOX RAKE- MX7- 84"	$ 8,642.00
87046040	POWER BOX RAKE- MX8- 90"	$ 9,501.00
87048529	WIRE HARNESS ADAPTER	$ 180.00
87048530	COLD PLANER- SP12M	$ 10,910.00
87048531	COLD PLANER- SP12H	$ 13,430.00
87048532	COLD PLANER- HP16	$ 20,620.00
87048533	COLD PLANER- HP18	$ 21,320.00
87048534	COLD PLANER- HP24	$ 24,470.00
87048535	COLD PLANER- HP30	$ 25,410.00
87050300	STUMP GRINDER- SG26	$ 9,300.00
87050301	STUMP GRINDER- SG30	$ 10,970.00
87050302	STUMP GRINDER- SG26	$ 9,300.00
87050303	STUMP GRINDER- SG30	$ 10,970.00
87050304	ELECTRICAL CONTROL PKG	$ 800.00

87050389	TREE SPADE- 2625	$ 13,440.00
87050390	TREE SPADE- 3625	$ 14,890.00
87050391	TREE SPADE- 4425	$ 18,850.00
87050392	CONTROL PKG- TREE SPADE	$ 1,630.00
87050400	TREE SPADE- 2625	$ 13,440.00
87050401	TREE SPADE- 3625	$ 14,890.00
87050402	TREE SPADE- 4425	$ 18,850.00
87050857	CHAIN ASSY- 6 X 60- R&F	$ 2,720.00
87050858	CHAIN ASSY- 12 X 36 TES	$ 1,360.00
87050942	TRENCHER- 625	$ 4,180.00
87050963	AUGER DRIVE- X975H200	$ 2,180.00
87050964	AUGER DRIVE- X975R256	$ 2,230.00
87050965	AUGER DRIVE- X1475H200	$ 2,060.00
87050966	AUGER DRIVE- X1475R256	$ 2,060.00
87050967	QD KIT- DIPPER	$ 147.00
87050968	PENDULUM MOUNT	$ 610.00
87050969	PENDULUM MOUNT	$ 610.00
87050970	PENDULUM MOUNT	$ 390.00
87050971	PENDULUM MOUNT	$ 460.00
87053287	AUGER DRIVE- X975H200	$ 2,180.00
87053288	AUGER DRIVE- X975R256	$ 2,180.00
87053289	AUGER DRIVE- X1475H200	$ 2,100.00
87053290	AUGER DRIVE- X1475R256	$ 2,100.00
87053912	REAR STABILZER PKG	$ 2,770.00
87053913	REAR STABILZER PKG	$ 2,870.00
87053914	GROUSER PAD SET	$ 200.00
87053915	MOUNTING KIT	$ 600.00
87311519	ADAPTER	$ 750.00
87311520	BRACKET- ATTACHMT MT CONV.	$ 740.00
87311521	TILLER- HT52- 52"	$ 5,980.00
87311522	TILLER- HT66- 66"	$ 6,570.00
87311523	SCARIFIER KIT- HT52	$ 250.00
87311524	SCARIFIER KIT- HT66- HT66H	$ 290.00
87311526	TILLER- HT52H- 52"	$ 5,980.00
87311527	TILLER- HT66H- 66"	$ 6,570.00
87311559	TILT ATTACH	$ 3,400.00
87313148	MOUNTING KIT- BACKHOE	$ 1,730.00
87313149	MOUNTING KIT- BACKHOE	$ 1,730.00
87313150	MOUNTING KIT- BACKHOE	$ 1,730.00
87313151	MOUNTING KIT- BACKHOE	$ 1,730.00
87313154	MOUNTING BRACKET	$ 270.00
87313155	MOUNTING BRACKET	$ 270.00
87313156	MOUNTING BRACKET	$ 270.00
87313157	MOUNTING BRACKET	$ 270.00
87318189	BACKHOE- 511	$ 11,280.00
87318192	MOUNTING KIT	$ 2,100.00
87318193	MOUNTING KIT	$ 2,100.00

87324175	BUCKET- SNOW- 84"	$ 1,960.00
87324176	BUCKET- SNOW- 96"	$ 2,090.00
87324178	BUCKET- SNOW- HD- 96"	$ 2,590.00
87324179	BUCKET- SNOW- HD- 108"	$ 2,860.00
87324180	BUCKET- SNOW- 84"	$ 1,960.00
87324181	BUCKET- SNOW- 96"	$ 2,090.00
87324182	BUCKET- SNOW- HD- 96"	$ 2,590.00
87324183	BUCKET- SNOW- HD- 108"	$ 2,860.00
87324184	CUTTING EDGE KIT- 84"	$ 520.00
87324185	CUTTING EDGE KIT- 96"	$ 600.00
87324186	CUTTING EDGE KIT- 108"	$ 720.00
87324790	TRACKS- F-SERIES- 10.00X16.5	$ 2,781.00
87324792	TRACKS- F-SERIES- 12.00X16.5	$ 3,362.00
87324797	TRACKS- F-SERIES- 10.00X16.5	$ 2,956.00
87324798	TRACKS- F-SERIES- 31.5X16.5	$ 3,675.00
87324799	TRACKS- F-SERIES- 10.00X16.5	$ 3,126.00
87324800	TRACKS- F-SERIES- 12.00X16.5	$ 3,179.00
87324801	TRACKS- F-SERIES-33/15.50X16.5	$ 3,877.00
87324802	TRACKS- F-SERIES- 12.00X16.5	$ 3,362.00
87324804	TRACKS- F-SERIES-33/15.50X16.5	$ 4,100.00
87324805	TRACKS- F-SERIES- 12.00X16.5	$ 3,362.00
87324806	TRACKS- F-SERIES-33/15.50X16.5	$ 4,100.00
87324807	TRACKS- F-SERIES- 12.00X16.5	$ 3,538.00
87324808	TRACKS- F-SERIES-33/15.50X16.5	$ 4,321.00
87326260	COLD PLANER- HP40	$ 31,150.00
87326406	WATER NOZZLE KIT	$ 380.00
87326408	TREE SHOVEL- COUPLER- 48"	$ 2,470.00
87326409	SNOW PUSHER- COUPLER-120"	$ 4,621.00
87326411	HARNESS- ELECTRIC CNTRL	$ 500.00
87330077	CHIPPER- 74500 STD FLOW	$ 9,814.00
87330078	CHIPPER- 74800 HIGH FLOW	$ 13,249.00
87330079	CHIPPER- 74500 STD FLOW	$ 9,814.00
87330080	CHIPPER- 74800 HIGH FLOW	$ 13,278.00
87334961	PALLET FORKS- CL III	$ 3,900.00
87334962	FORK- PALLET	$ 4,020.00
87335024	BUCKET- COUPLER- GP- 82"	$ 2,670.00
87338935	WATER KIT- ROOF MOUNT	$ 1,550.00
87338937	BUCKET- COUPLER- 4X1- 82"	$ 7,380.00
87343214	TILLER- HT66- 66"	$ 7,350.00
87343215	TILLER- HT78- 78"	$ 7,850.00
87343216	SCARIFIER KIT- HT78H	$ 370.00
87343219	TILLER- HT66H- 66"	$ 7,350.00
87343220	TILLER- HT78H- 78"	$ 7,850.00
87355589	COUPLER- MANUAL	$ 2,630.00
87358182	SNOW BLOWER- 60"	$ 6,400.00
87373001	VIBRATORY ROLLER- VRS48- 48"	$ 9,680.00
87373002	VIBRATORY ROLLER- VRS66- 66"	$ 10,610.00

87373003	VIBRATORY ROLLER- VRS73- 73"	$ 11,060.00
87373004	VIBRATORY ROLLER- VRS84- 84"	$ 11,550.00
87373005	VIBRATORY ROLLER- VRS48- 48"	$ 9,680.00
87373006	VIBRATORY ROLLER- VRS66- 66"	$ 10,610.00
87373007	VIBRATORY ROLLER- VRS73- 73"	$ 11,060.00
87373008	VIBRATORY ROLLER- VRS84- 84"	$ 11,550.00
87373393	REAR STABILZER PKG	$ 3,230.00
87373395	VIBRATORY ROLLER- VRP48- 48"	$ 10,200.00
87373396	VIBRATORY ROLLER- VRP66- 66"	$ 11,330.00
87373397	VIBRATORY ROLLER- VRP73- 73"	$ 11,800.00
87373398	VIBRATORY ROLLER- VRP84- 84"	$ 12,480.00
87373402	VIBRATORY ROLLER- VRP48- 48"	$ 10,200.00
87373403	VIBRATORY ROLLER- VRP66- 66"	$ 11,330.00
87373404	VIBRATORY ROLLER- VRP73- 73"	$ 11,800.00
87373405	VIBRATORY ROLLER- VRP84- 84"	$ 12,480.00
87381816	BALE HANDLER	$ 3,170.00
87381817	BALE HANDLER	$ 3,170.00
87381819	LIFT BOOM- 6'	$ 1,510.00
87381820	BOOM- TRUSS	$ 4,560.00
87381834	BOOM- TRUSS	$ 4,560.00
87381893	GRAPPLE- BRUSH- HD- 84"	$ 11,870.00
87381898	PALLET FORK SET- 2X4X48 IN	$ 1,480.00
87381900	GRAPPLE- SCRAP- HD- 84"	$ 11,870.00
87381908	BUCKET- 4X1- 82"	$ 7,400.00
87381909	BUCKET- 4X1- 90"	$ 7,860.00
87381910	BUCKET- 4X1- HD- 82"	$ 7,400.00
87381911	BUCKET- 4X1- HD- 90"	$ 7,630.00
87381971	ROCK BUCKET- HD- 84"- 3" SPAC	$ 7,660.00
87381974	ROCK BUCKET- 84"- HD- 3" SPAC	$ 7,660.00
87381975	ROCK BUCKET- 66" 3 TINE	$ 1,960.00
87381976	ROCK BUCKET- 66" 2 TINE	$ 2,170.00
87381977	ROCK BUCKET- 75" 3 TINE	$ 2,130.00
87381978	ROCK BUCKET- 75" 2 TINE	$ 2,250.00
87381979	ROCK BUCKET- 84" 3 TINE	$ 2,250.00
87382017	GRAPPLE- HD- SCRAP 83"	$ 8,680.00
87382018	GRAPPLE- SCRAP HD 83"	$ 8,440.00
87382021	CONCRETE CLAW- HD	$ 3,150.00
87382022	CONCRETE CLAW- HD- W80TC	$ 3,150.00
87382066	ATTACHMENT- LOG GRAPPLE - CASE	$ 5,160.00
87382368	ROOT RAKE- 72" W/GRAPPLECING	$ 5,900.00
87382369	ROOT RAKE- HD- 84" W/GRAPPLE	$ 6,750.00
87382370	ROOT RAKE- 72" W/GRAPPLE	$ 5,900.00
87382371	ROOT RAKE- 84"- HD- W/GRAPPLE	$ 6,750.00
87382376	BLADE- SNOW- HD- 108" W/STEEL	$ 5,190.00
87382377	BLADE- SNOW- HD- 120" W/STEEL	$ 6,280.00
87382378	SNOW BLADE- 108"	$ 5,190.00
87382379	SNOW BLADE- 120"	$ 6,280.00

87382385	CONTROL PKG- TREE SPADE	$ 1,740.00
87383455	TREE SHOVEL- 36"	$ 1,660.00
87383456	TREE SHOVEL- 42"	$ 1,770.00
87383457	TREE SHOVEL- 48"	$ 1,890.00
87383458	WIRE HARNESS ADAPTER	$ 140.00
87383459	TILT ATTACH- HD	$ 3,490.00
87387403	DOZER BLADE- PL1300- 72"	$ 5,530.00
87387404	DOZER BLADE- PL1300- 84"	$ 5,620.00
87387405	DOZER BLADE- PL1300- 96"	$ 5,715.00
87389689	SNOW PUSH- 120" CASE	$ 4,625.00
87389692	GRAPPLE OPTION- 75" AND 84"	$ 2,700.00
87389704	ROOT RAKE- 78" W/GRAPPLE	$ 6,380.00
87389705	ROOT RAKE- 84" W/GRAPPLE	$ 6,750.00
87389706	ROOT RAKE- 78" W/GRAPPLE	$ 6,380.00
87389707	ROOT RAKE- 84" W/GRAPPLE	$ 6,750.00
87389730	AUGER DRIVE- QC- X1975H200- LM	$ 3,680.00
87389733	BRACKET- CRADLE MOUNT	$ 770.00
87389736	BRACKET- PENDULUM MOUNT	$ 620.00
87389737	CRADLE MOUNT	$ 1,470.00
87389801	BLADE- SNOW- HD- 108" W/SOFT	$ 7,020.00
87389802	BLADE- SNOW- HD- 120" W/SOFT	$ 7,020.00
87389803	SNOW BLADE- 108"	$ 6,483.00
87389804	SNOW BLADE- 120"	$ 7,020.00
87398932	BUCKET- CONCRETE- 0.5 YD	$ 2,750.00
87398933	BUCKET- CONCRETE- 0.75 YD	$ 2,980.00
87423971	COUPLER- HYDRAULIC QA	$ 4,010.00
87441569	J-HOOK- 93" GP BUCKET TO QC CA	$ 970.00
87441570	J-HOOK- 93" 4X1 BUCKET TO QC C	$ 1,250.00
87441572	BUCKET- QUICK ATT- HD- 93"	$ 3,068.00
87441573	BUCKET- 4X1- Q/A 93"	$ 6,375.00
87473539	BALE SPEAR- DUAL QCP7000	$ 960.00
87473623	BALE SPEAR - HD SINGLE - NH	$ 960.00
87473624	BALE SPEAR - HD DUAL - NH	$ 960.00
87473625	BALE SPEAR - SQ. 27IN - NH	$ 920.00
87473626	BALE SPEAR - SQ. 44IN - NH	$ 1,110.00
87473627	BALE SPEAR- HD SINGLE 96"	$ 960.00
87473628	BALE SPEAR- HD DUAL	$ 960.00
87473629	BALE SPEAR- 3 X 27"	$ 920.00
87473630	BALE SPEAR- 3 X 44"	$ 1,110.00
87473631	BALE SPEAR- HD DUAL	$ 960.00
87473632	3 PT HITCH ADAPTOR - NH	$ 1,330.00
87487655	SKID HOE - NH	$ 2,710.00
87487656	SKID HOE	$ 2,710.00
87487657	THUMB ATCHMT FACT. INSTALLED	$ 860.00
87487658	THUMB ATCHMT FIELD INSTALLED	$ 650.00
87488568	FORK- 43"- L120 - L125	$ 850.00
87488569	TREE SHOVEL- L120 - L125	$ 710.00

87488570	BRUSH GRAPPLE 42"- L120 - L125	$ 2,650.00
87488579	AUGER DRIVE- X1225H200	$ 2,283.00
87488580	AUGER DRIVE- X1425R256	$ 2,194.00
87488582	AUGER DRIVE- X5075- H200	$ 5,520.00
87488583	AUGER PKG X5075H200 TLB QCP MT	$ 6,160.00
87488584	AUGER PKG X5075H200 TLB DPR MT	$ 5,190.00
87488593	AUGER DRIVE- X5075H200	$ 5,520.00
87488594	AUGER DRIVE- X5075H200- LDR MT	$ 6,020.00
87488595	AUGER DRIVE- X5075H200- BH MT	$ 5,190.00
87498436	THUMB- STIFF ARM- STD DIPPER	$ 2,830.00
87498437	THUMB-STIFF ARM- HED DIPPER	$ 2,830.00
87498438	HYDRAULIC THUMB- STD DIPPER	$ 3,610.00
87498439	THUMB- HYDRAULIC- HED DIPPER	$ 3,350.00
87498440	THUMB- MECH- STD DIPPER/ HED	$ 3,690.00
87498441	BACKHOE- 485	$ 9,400.00
87498442	BACKHOE- 6100	$ 11,180.00
87498443	BACKHOE- 6120	$ 11,497.00
87498474	BACKHOE- 485	$ 9,400.00
87498475	BACKHOE- 6100	$ 11,180.00
87498476	BACKHOE- 6120	$ 11,497.00
87498477	RUBBER PADS- 6100- 6120	$ 460.00
87523114	ROCK SAW- 18"	$ 20,860.00
87523115	ROCK SAW- 24"	$ 22,320.00
87523116	ROCK SAW- RS18- 18"	$ 20,860.00
87523117	ROCK SAW- RS24- 24"	$ 22,320.00
87523118	DRUM/PICK KIT- RS18- 2.5"	$ 2,160.00
87523119	DRUM/PICK KIT- RS18- 4"	$ 2,210.00
87523120	DRUM/PICK KIT- RS24- 2.5"	$ 2,880.00
87523121	DRUM/PICK KIT- RS24- 4"	$ 3,020.00
87542212	SNOW BLADE- 120" CASE	$ 5,770.00
87553104	BROOM- PICK-UP- 60"	$ 6,940.00
87553105	BROOM- PICK-UP- 72"	$ 7,640.00
87553106	BROOM- PICK-UP- 84"	$ 8,880.00
87553107	BROOM- PICK-UP- 60"	$ 6,940.00
87553108	BROOM- PICK-UP- 72"	$ 7,640.00
87553109	BROOM- PICK-UP- 84"	$ 8,880.00
87554973	TRENCHER- 640	$ 6,610.00
87554974	TRENCHER- 640	$ 6,610.00
87554975	BOOM AND CRUMBER ASSY- 60"	$ 930.00
87596129	SILT FENCE INSTALLER- INT MT	$ 6,233.00
87596130	SILT FENCE INSTALLER- 3 PT MT	$ 6,489.00
87596131	SILT FENCE INSTALLER- 3 PT MT	$ 7,811.00
87596132	SILT FENCE INSTALLER- 3 PT MT	$ 7,939.00
87596133	SILT FENCE INSTALLER- INT MT	$ 6,489.00
87596134	SILT FENCE INSTALLER 3 PT MT	$ 6,489.00
87596135	SILT FENCE INSTALLER 3 PT MT	$ 7,811.00
87596136	SILT FENCE INSTALLER 3 PT MT	$ 7,811.00

87596137	ADAPTER BRACKET- 3 PT MT	$	746.00
87596138	HYDR. TOP-LINK KIT- 3 PT MT	$	355.00
87606942	BROOM- ANGLE- LW/W- 120"	$	20,020.00
87606943	BROOM- ANGLE- LW/W- 120"	$	20,080.00
87606944	DUST CONTROL KIT	$	2,190.00
87620132	FORK CARRIAGE 48"-NH	$	2,930.00
87620133	FORK CARRIAGE 60"-NH	$	3,050.00
87620134	FORK CARRIAGE 72"-NH	$	3,390.00
87620135	FORK TILL-CARRIAGE 48"-NH	$	4,990.00
87620136	FORK TILL-CARRIAGE 60"-NH	$	5,190.00
87620137	FORK SWING CARRIAGE 72"-NH	$	10,280.00
87620138	SET PALLET FORKS 2X2X48	$	1,560.00
87620139	Lumber Fork Set (2) - 1-3/4"x7"x60"(10,000# capacity)	$	2,810.00
87620140	BLOCK FORK SET 2 X 2 X 48	$	3,580.00
87620141	BUCKET LM 1.25 CU YD.	$	3,200.00
87620142	BUCKET, LIGHT MATERIAL, 96" (2.5 yd^3)	$	5,060.00
87620144	ATTACHMENT BRAM COLLECTOR 96IN	$	14,150.00
87620145	AUGER ASM X 1475-NH	$	3,350.00
87637921	TRUSS BOOM 12FT NH	$	2,330.00
87648131	BUCKET- 4X1- UTILITY- 66"	$	3,920.00
87648132	BUCKET- 4X1- UTILITY- 72"	$	4,190.00
87648133	BUCKET- 4X1- UTILITY- 66"	$	3,920.00
87648134	BUCKET- 4X1- UTILITY- 72"	$	4,190.00
87648135	SPILL GUARD- 4X1- 66"	$	160.00
87648136	SPILL GUARD- 4X1- 72"	$	160.00
87648137	BRACKET- HAMMER ADAPTER IPC	$	464.00
87648158	BUCKET- 4X1- CONST- 72"	$	4,780.00
87648159	BUCKET- 4X1- CONST- 78"	$	4,920.00
87648160	BUCKET- 4X1- CONST- 84"	$	5,080.00
87648161	BUCKET- 4X1- CONSTRUCTION 72"	$	4,780.00
87648162	BUCKET- 4X1- CONSTRUCTION 78"	$	4,920.00
87648163	BUCKET- 4X1- CONSTRUCTION 84"	$	5,080.00
87648164	BRACKET- AUGER ADAPTER	$	440.00
87648165	SPILL GUARD- 4X1- 78"	$	190.00
87648166	SPILL GUARD- 4X1- 84"	$	200.00
87648167	BALE SPEAR - STD SINGLE - NH	$	650.00
87648168	BALE SPEAR- STD SINGLE	$	650.00
87651654	BUCKET- 1.75 CU YD- LM430	$	4,220.00
87651656	BLANK- Q-FIT ADAPTER - LM430	$	700.00
87651657	GRAPPLE LG SQ BALE - LM430	$	9,770.00
87651658	BALE SPIKE- DUAL RD - LM430	$	2,190.00
87651659	COMPLETE VERSATTACH - LM430	$	4,770.00
87677264	GRAPPLE- SCRAP UT- 72"	$	4,158.00
87677285	GRAPPLE- SCRAP CONSTR. 76"	$	4,960.00
87677286	GRAPPLE- SCRAP CONSTR. 82"	$	5,290.00
87677287	GRAPPLE- SCRAP CONSTR. 88"	$	5,530.00

87677288	GRAPPLE- SCRAP CONSTR. 76"	$ 4,960.00
87677289	GRAPPLE- SCRAP CONSTR. 82"	$ 5,290.00
87677290	GRAPPLE- SCRAP CONSTR. 88"	$ 5,530.00
87678031	GRAPPLE- BRUSH- UTILITY- 72"	$ 4,096.00
87678033	GRAPPLE- BRUSH- UTILITY- 72"	$ 4,096.00
87678203	GRAPPLE- BRUSH- CONSTR.- 72"	$ 4,740.00
87678204	GRAPPLE- BRUSH- CONSTR.- 78"	$ 5,020.00
87678205	GRAPPLE- CONST. BRUSH-84"	$ 5,290.00
87678206	GRAPPLE- BRUSH- CONSTR.- 90"	$ 5,330.00
87678207	GRAPPLE- BRUSH- CONSTR.- 72"	$ 4,740.00
87678208	GRAPPLE- BRUSH- CONSTR.- 78"	$ 5,020.00
87678209	GRAPPLE- BRUSH- CONSTR.- 84"	$ 5,290.00
87678210	GRAPPLE- BRUSH- CONSTR.- 90"	$ 5,330.00
87709856	PALLET FORK SET	$ 1,900.00
87710673	PALLET FORKS- 48"- STD CARR.	$ 2,930.00
87710674	PALLET FORKS- 60"- STD CARR.	$ 3,050.00
87710675	PALLET FORKS- 72"- STD CARR.	$ 3,390.00
87710676	PALLET FORKS- 48"- TILT CARR.	$ 4,990.00
87710677	PALLET FORKS- 60"- TILT CARR.	$ 5,190.00
87710678	PALLET FORKS- 72"- SS CARR.	$ 10,280.00
87710679	BOOM- TRUSS- 12'	$ 2,330.00
87716389	PALLET FORKS- 72"- TILT CARR.	$ 5,470.00
87716390	PALLET FORKS- 48"- SS CARR.	$ 6,190.00
87716391	PALLET FORKS- 60"- SS CARR.	$ 6,370.00
87716394	PALLET FORK SET	$ 1,830.00
87716395	PALLET FORK SET	$ 1,930.00
87716398	BOOM- TRUSS- 15'	$ 2,830.00
87716405	BUCKET- LM- 96"	$ 3,550.00
87716406	BUCKET- LM- 96"	$ 3,870.00
87716407	BUCKET- LM- 96"	$ 4,120.00
87716408	BUCKET- SCRAP GRAPPLE- 96"	$ 8,850.00
87716409	GRAPPLE- BRUSH- 84"	$ 11,740.00
87716420	BROOM- COLLECTOR- 96"	$ 14,150.00
87716748	AUGER DRIVE- X1475H200	$ 3,350.00
87719488	COUPLER- HYDRAULIC- QA	$ 4,210.00
470403639	PALLET (CDE) W/42" STD. TINES	$ 1,025.00
196042A1	BUCKET- QUICK ATT- 82"	$ 2,760.00
196044A1	BUCKET- 4X1- QUICK ATT- 82"	$ 7,980.00
196802A1	QD/HOSE KIT	$ 750.00
234326A1	BOX SCRAPER- 38.4 FT (4X4)	$ 5,410.00
251018A1	BLADE- SNOW/DOZING 108"	$ 5,700.00
251357A1	76" AUTO-RAKE	$ 12,530.00
279530A1	AUTO RAKE- 66"	$ 11,330.00
295686A1	BUCKET- QUICK ATT- HD- 82"	$ 2,255.00
301093A1	LANDSCAPE RAKE	$ 5,281.00
301094A1	GRAPPLE- SCRAP 82"	$ 8,680.00
311053A1	COUPLER- Q/D- W/RESTRICTOR	$ 2,630.00

318637A1	J-HOOK- 82" GP BUCKET TO QC CA	$ 960.00
318638A1	J-HOOK- 82" 4X1 BUCKET TO QC C	$ 1,160.00
442932A1	POWER BOX RAKE- M6- 72"	$ 8,152.00
442935A1	MOUNTING FRAME- M6	$ 2,385.00
442936A1	MOUNTING FRAME- M6-MX7- MX8	$ 1,500.00
442937A1	MOUNTING FRAME- M6-MX7- MX8	$ 683.00
442938A1	WIRE HARNESS- 14 PIN	$ 260.00
442939A1	CONTROL HARNESS	$ 180.00
442972A1	BLADE- SNOW- HYD ANGLE 5'	$ 3,580.00
442973A1	BLADE- SNOW- HD HYD ANGLE 7'	$ 4,780.00
442974A1	BLADE- SNOW- HD HYD ANGLE 8'	$ 4,980.00
442975A1	BLADE- SNOW- HD HYD ANGLE 9'	$ 5,100.00
442977A1	BLADE- SNOW- HD HYD ANGLE 7'	$ 5,190.00
442978A1	BLADE- SNOW- HD HYD ANGLE 8'	$ 5,470.00
442979A1	BLADE- SNOW- HD HYD ANGLE 9'	$ 5,760.00
444900A1	SNOW PUSHER- 120"	$ 5,800.00
444902A1	SNOW PUSHER- 120"	$ 4,621.00
444903A1	SNOW PUSHER- 96"	$ 4,079.00
445994A1	60" HOPPER BROOM	$ 4,445.00
445995A1	72" HOPPER BROOM	$ 4,830.00
445996A1	84" HOPPER BROOM	$ 5,220.00
445999A1	WATER KIT W/ TANK	$ 1,630.00
446005A1	FARM FORK- 78"	$ 2,026.00
446009A1	96" SNOW PUSH	$ 4,080.00
446010A1	120" SNOW PUSH	$ 4,621.00
446013A1	96" PULL BACK KIT	$ 1,060.00
446014A1	120" PULL BACK KIT	$ 1,190.00
446017A1	96" PULL BACK RUBBER EDGE	$ 610.00
446018A1	PULL BACK RUBBER EDGE 120"	$ 840.00
446019A1	66" PREPARATOR	$ 10,210.00
446020A1	76" PREPARATOR	$ 10,960.00
48188358ET	ETCHED PALLET FORK FRAME ONLY	$ 840.00
48188360ET	ETCHD PLLTFRK ASSY 42IN-2500LB	$ 1,090.00
48188361ET	ETCHD PLLTFRK ASSY 48IN-2500LB	$ 1,100.00
48188362ET	ETCHD PLLTFRK ASSY 42IN-4000LB	$ 1,140.00
48188363ET	ETCHD PLLTFRK ASSY 48IN-4000LB	$ 1,170.00
48188365ET	ETCHD PLLTFRK ASSY 42IN-5500LB	$ 1,195.00
48188366ET	ETCHD PLLTFRK ASSY 48IN-5500LB	$ 1,215.00
H673869	BLADE- SNOW- HYD ANGLE 7'	$ 3,760.00
H673881	BLADE- SNOW- HYD ANGLE 6'	$ 3,670.00
H674390	THREE POINT HITCH	$ 1,330.00

T-631
Tractors: Skid Steers Attachments
 # 727-1019

Skid Steer / Compact Track Loaders

FIXED PRICING
(BASE UNIT INFORMATION)
Specification 3.0

October, 2019

Vendor Name:	**Ziegler Inc.**
Contact Person:	**Cory Dalbec, Chris Rice**
Street Address:	**901 West 94th Street**
P.O. Box:	
City, State, Zip	**Bloomington, MN 55420**
Phone #:	**952.888.4121**
Toll Free #:	**800.352.2812**
Email Address:	**cory.dalbec@zieglercat.com, chris.rice@zieglercat.com**
Website:	www.zieglercat.com

Spec #	Information Requested	Answer
3.1	**MAKE AND MODEL**	Caterpillar 226D3
	Engine Type and SAE net HP	Cat C2.2 (turbo) 65.8 HP
	Tier	Tier 4 Final
	Length w/o attachments	99.4"
	Height with operator cab	79.8"
	Ground clearance	6.9"
	Maximum height to bucket hinge pin	110.9"
	Breakout force	3,927 lb
	Reach at maximum height	21"
	Dump angle at maximum height	46.7 Degrees
	Dump height with standard bucket	81.8"
	Front clearance circle with standard bucket	77.8"
	Rear clearance circle	59.6"
	Tipping load - SAE rated	3,100 lb
	Rated operating capacity - SAE	1,650 lb
	Standard bucket capacity - SAE heaped rating	.52 CYD
	Operating weight - SAE rated	5,849 lb
	Travel speed	11.1 MPH (Two Speed)
	Fuel tank capacity	15.1 gal
	Cold weather starting assist	Yes
	Battery CCA	850 CCA
	Alternator size - amps	80 Amps
	Transmission type	Hydrostatic
	Tire / Track size / width	TIRES, 10X16.5 GA 8PR CAT- 60" WIDTH
	Final drive chains and drive method	#100 pre-stressed chain Direct sprocket to chain drive
	Final drive chain adjustment / maintenance	500 Hours
	Gauges / instrumentation	Gauges: fuel level, hour meter Instrumentation: Engine coolant temperature, engine oil pressure, hydraulic oil temperature
	Pump type - GPM and PSI	Gear Pump - 18 gal/min and 3,336 psi
	Control valves	Hydraulic 3 section
	Hydraulic oil cooler	Included - air to oil
	Drive controls	Electro/Hydraulic - hand controls
	Lift and tilt controls	Electro/Hydraulic - hand controls
	Engine speed control	Both foot and hand control
	Work lights - front	Included 2 each
	Work lights - rear	Included 2 each
	Warranty	2 year Unlimited hour parts/labor
	BASE UNIT PRICE:	$ 37,040.00

SKID / COMPACT TRACK LOADER
OPTIONS - FIXED PRICING
SPECIFICATION 4.0

Spec #	Description	Price
	Price for base unit:	$ 37,040.00
4.1	**Skid/Compact Track Loader Options:** Use this section to offer additional skid/track loader options such as hand controls, gauges, heater, enclosed cab etc.. These options should be for skid steer power unit and not attachments.	
4.1.1	PRESSURIZED CAB, HEATER/DEFROSTER & DOOR	$ (1,390.00)
4.1.2	PRESSURIZED CAB, HEATER/DEFROSTER, AIR CONDITIONING & DOOR	INCLUDED
4.1.3	OPEN ROPS	$ (3,020.00)
4.1.4	AIR SUSPENSION SEAT-CLOTH	INCLUDED
4.1.5	PROPORTIONAL WORK TOOL CONTROL	INCLUDED
4.1.6	TWO SPEED CONTROL	INCLUDED
4.1.7	HYDRAULIC COUPLER	INCLUDED
4.1.8	FAN, COOLING, DEMAND	INCLUDED
4.1.9	HIGH FLOW HYDRAULICS	$ 2,080.00
4.1.10	DOOR, CAB, POLYCARBONATE	$ 150.00
4.1.11	DOOR, CAB, GLASS	INCLUDED
4.1.12	RADIO AM-FM, CD, BLUETOOTH	INCLUDED
4.1.13	ADVANCED DISPLAY WITH BACKUP CAMERA	INCLUDED
4.1.14	DUAL SELF-LEVELING	INCLUDED
4.1.15	HEAVY DUTY BATTERY W/DISCONNECT	$ 90.00
4.1.16	HALOGEN LIGHTS	INCLUDED
4.1.17	BEACON LIGHT	$ 150.00
4.1.18	REAR LIGHTS	INCLUDED
4.1.19	REAR LIGHTS, STOP/TAIL/TURN	$ 540.00
4.1.20	ROADING LIGHTS	$ 680.00
4.1.21	SEAT BELT, 2"	INCLUDED
4.1.22	SEAT BELT, 3"	$ 200.00
4.1.23	RETURN TO DIG/ WORKTOOL POSITIONER	INCLUDED
4.1.24	COUNTERWEIGHT, MACHINE EXTERNAL	$ 350.00
4.1.25	MOUNTING, FIRE EXTINGUISHER	$ 290.00
4.1.26	SINGLE EYE LIFTING POINT	$ 1,200.00
4.1.27	LIFTING EYE 4 POINT	$ 130.00
4.1.28	FOPS, LEVEL 2	$ 2,700.00
4.1.29	HEATER, ENGINE COOLANT, 120V	$ 140.00
4.1.30	PRODUCT LINK, CELLULAR, PL243	INCLUDED
4.1.31	PRODUCT LINK, CELLULAR, PL641	$ 320.00
4.1.32	OIL, HYDRAULIC, COLD OPERATION	$ 450.00
4.1.33	PATTERN CHANGER	$ 750.00
4.1.34	CASE DEDICATED CONTROLS	$ 100.00
4.1.35	PAINT, CUSTOM	$ 1,460.00
4.1.36	CORRISION INHIBITOR - EquipCoat Spray / Clear Coat	$ 2,500.00
4.1.37	TIRES, 10X16.5 GA 8PR CAT- 60" WIDTH	INCLUDED
4.1.38	TIRES, 10X16.5 GA 8PR CAT- 66" WIDTH	$ 550.00
4.2	**Bucket Options:** Use this section to offer bucket options such as standard, snow or combination buckets, etc..	
4.2.1	BUCKET-GENERAL PURPOSE, BOLT ON CUTTING EDGE 62"	$ 1,130.00
4.2.2	BUCKET-GENERAL PURPOSE, BOLT ON CUTTING EDGE 68"	$ 1,230.00
4.2.3	BUCKET-GENERAL PURPOSE, BOLT ON CUTTING EDGE 74"	$ 1,360.00
4.2.4	BUCKET-GENERAL PURPOSE, BOLT ON CUTTING EDGE 80"	$ 1,440.00
4.2.5	BUCKET-GENERAL PURPOSE, BOLT ON CUTTING EDGE 86"	$ 1,540.00
4.2.6	BUCKET-LIGHT MATERIAL, BOLT ON CUTTING EDGE 74"	$ 1,390.00
4.2.7	BUCKET-LIGHT MATERIAL, BOLT ON CUTTING EDGE 80"	$ 1,490.00
4.2.8	BUCKET-LIGHT MATERIAL, BOLT ON CUTTING EDGE 86" (1.1 CU. YD.)	$ 1,600.00
4.2.9	BUCKET-LIGHT MATERIAL, BOLT ON CUTTING EDGE 86" (1.4 CU. YD.)	$ 1,780.00
4.2.10	BUCKET-LIGHT MATERIAL, BOLT ON CUTTING EDGE 98"	$ 1,800.00
4.2.11	BUCKET-LIGHT MATERIAL, BOLT ON CUTTING EDGE 104"	$ 1,870.00
4.2.12	BUCKET-LOW PROFILE, BOLT ON CUTTING EDGE 56"	$ 740.00
4.2.13	BUCKET-LOW PROFILE, BOLT ON CUTTING EDGE 62"	$ 850.00
4.2.14	BUCKET-LOW PROFILE, BOLT ON CUTTING EDGE 68"	$ 950.00
4.2.15	BUCKET-LOW PROFILE, BOLT ON CUTTING EDGE 74"	$ 1,050.00
4.2.16	BUCKET-LOW PROFILE, BOLT ON CUTTING EDGE 80"	$ 1,160.00
4.2.17	BUCKET-MULTI-PURPOSE, BOLT ON CUTTING EDGE W/SG, 62"	$ 3,030.00
4.2.18	BUCKET-MULTI-PURPOSE, BOLT ON TEETH W/SG 62"	$ 3,030.00
4.2.19	BUCKET-MULTI-PURPOSE, W/BO EDGE 68" W/SG	$ 3,290.00
4.2.20	BUCKET-MULTI-PURPOSE, BOLT ON TEETH 68" W/SG	$ 3,290.00
4.2.21	BUCKET-MULTI-PURPOSE, BOLT ON CUTTING EDGE 74" W/SG	$ 3,540.00
4.2.22	BUCKET-MULTI-PURPOSE, BOLT ON TEETH 74" W/SG	$ 3,540.00
4.2.23	BUCKET-MULTI-PURPOSE, BOLT ON CUTTING EDGE 80" W/SG	$ 3,800.00
4.2.24	BUCKET-MULTI-PURPOSE, BOLT ON TEETH 80" W/SG	$ 3,800.00
4.2.25	BUCKET-MULTI-PURPOSE, BOLT ON CUTTING EDGE 86" W/SG	$ 4,050.00
4.2.26	BUCKET-MULTI-PURPOSE, BOLT ON TEETH 86" W/SG	$ 4,050.00
4.2.27	BUCKET-TOOTH, BOLT ON TEETH 62"	$ 1,180.00
4.2.28	BUCKET-TOOTH, BOLT ON TEETH 68"	$ 1,270.00
4.2.29	BUCKET-TOOTH, BOLT ON TEETH 74"	$ 1,360.00
4.2.30	BUCKET-TOOTH, BOLT ON TEETH 80"	$ 1,470.00
4.2.31	BUCKET-TOOTH, BOLT ON TEETH 86"	$ 1,560.00
4.2.32	BUCKET-UTILITY, BOLT ON CUTTING EDGE 62"	$ 1,030.00
4.2.33	BUCKET-UTILITY, BOLT ON CUTTING EDGE 68"	$ 1,130.00
4.2.34	BUCKET-UTILITY, BOLT ON CUTTING EDGE 74"	$ 1,230.00

SKID / COMPACT TRACK LOADER
OPTIONS - FIXED PRICING
SPECIFICATION 4.0

Spec #	Description		Price
4.3	**Overtire tracks:**		
	Use this section to offer overtire tracks.		
4.4	**Forks:**		
	Use this section to offer fork options, such as pallet forks, bale handler, etc..		
4.4.1	FORKS, 48" PALLET W/ CARRIAGE	$	710.00
4.4.2	FORKS, 66" INDUSTRIAL GRAPPLE	$	4,640.00
4.4.3	FORKS, 72" INDUSTRIAL GRAPPLE	$	5,540.00
4.5	**Adaptor Plate:**		
	Use this section to offer adaptor plate options.		
	Universal Adapter Plate	$	220.00
4.6	**Snowblower:**		
	Use this section to offer snowblower options.		
4.6.1	SR115 SNOW BLOWER, 60" WORKING WIDTH, 20-23 GPM HYDRAULIC FLOW	$	6,990.00
4.6.2	SR118 SNOW BLOWER, 72" WORKING WIDTH, 20-23 GPM HYDRAULIC FLOW	$	7,100.00
4.6.3	SR121 SNOW BLOWER, 85" WORKING WIDTH, 20-23 GPM HYDRAULIC FLOW	$	7,200.00
4.6.4	SR318 SNOW BLOWER, 72" WORKING WIDTH, 31-33 GPM HYDRAULIC FLOW	$	7,470.00
4.6.5	SR321 SNOW BLOWER, 85" WORKING WIDTH, 31-33 GPM HYDRAULIC FLOW	$	7,950.00
4.7	**Sweeper:**		
	Use this section to offer sweeper options.		
4.7.1	BA118C, MANUAL ANGLE, 83" WIDTH	$	5,970.00
4.7.2	BA118C, HYDRAULIC ANGLE, 83" WIDTH	$	7,120.00
4.7.3	BP115C, PICKUP BROOM	$	5,530.00
4.7.4	BP118C, PICKUP BROOM	$	5,940.00
4.7.5	BU115, UTILITY BROOM	$	3,770.00
4.7.6	BU118, UTILITY BROOM	$	4,100.00
4.8	**Backhoe:**		
	Use this section to offer backhoe options.		
4.8.1	BACKHOE, BH150 (INCLUDES D SERIES MOUNTING BRACKET AND 24" BUCKET).	$	14,830.00
4.8.2	BACKHOE, BH160 W/ AUXILIARY (INCLUDES D SERIES MOUNTING BRACKET AND 24" BUCKET).	$	15,280.00
4.9	**Planer:**		
	Use this section to offer planer options.		
4.9.1	COLD PLANER, PC104B, 14" WORKING WIDTH, 16-21 GPM REQUIRED HYDRAULIC FLOW	$	10,000.00
4.9.2	COLD PLANER, PC205B, 18" WORKING WIDTH, 21-31 GPM REQUIRED HYDRAULIC FLOW	$	12,550.00
4.9.3	COLD PLANER, PC305B, 18" WORKING WIDTH, 26-33 GPM REQUIRED HYDRAULIC FLOW	$	15,400.00
4.9.4	COLD PLANER, PC306B, 24" WORKING WIDTH, 26-33 GPM REQUIRED HYDRAULIC FLOW	$	16,510.00
4.9.5	COLD PLANER, PC408B, 30" WORKING WIDTH, 40 GPM REQUIRED HYDRAULIC FLOW	$	19,490.00
4.9.6	COLD PLANER, PC310B, 39" WORKING WIDTH, 33 GPM REQUIRED HYDRAULIC FLOW	$	23,010.00
4.9.7	COLD PLANER, PC412, 47" WORKING WIDTH, 40 GPM REQUIRED HYDRAULIC FLOW	$	25,560.00
4.10	**Snow Plow:**		
	Use this section to offer snow plow options.		
4.10.1	SNOW PLOW, 72"	$	3,580.00
4.10.2	SNOW PLOW, 84"	$	3,780.00
4.10.3	SNOW PLOW, 96"	$	3,980.00
4.10.4	SNOW PLOW, 108"	$	4,240.00
4.10.5	SNOW PLOW, 120"	$	4,780.00
4.10.6	SNOW PUSH, SSL, STD DTY 8'	$	2,520.00
4.10.7	SNOW PUSH, SSL, STD DTY 10'	$	2,970.00
4.10.8	SNOW PUSH, SSL, STD DTY 12'	$	3,530.00
4.11	**Hydraulic breaker:**		
	Use this section to offer hydraulic breaker options.		
4.11.1	H55S HAMMER WITH SSL MOUNTS	$	7,850.00
4.11.2	H65S HAMMER WITH SSL MOUNTS	$	9,230.00
4.11.3	B4 HAMMER, NON-SILENCED WITH SSL MOUNTS	$	4,390.00
4.11.4	B4S HAMMER, SILENCED WITH SSL MOUNTS	$	4,880.00
4.11.5	B6S HAMMER, SILENCED WITH SSL MOUNTS	$	7,100.00
4.11.6	B6S HAMMER, NON-SILENCED WITH SSL MOUNTS	$	6,390.00
4.11.7	B8S HAMMER, SILENCED WITH SSL MOUNTS	$	9,430.00
4.11.8	B8 HAMMER, NON-SILENCED WITH SSL MOUNTS	$	8,490.00
4.12	**Grapple:**		
	Use this section to offer grapple options.		
4.12.1	BUCKET, UTILITY GRAPPLE 68"	$	2,430.00
4.12.2	BUCKET, UTILITY GRAPPLE 74"	$	2,530.00
4.12.3	BUCKET, INDUSTRIAL GRAPPLE 62"	$	3,590.00
4.12.4	BUCKET, INDUSTRIAL GRAPPLE 68"	$	3,760.00
4.12.5	BUCKET, INDUSTRIAL GRAPPLE 74"	$	4,210.00
4.12.6	BUCKET, INDUSTRIAL GRAPPLE 80"	$	4,640.00
4.12.7	GRAPPLE RAKE 72"	$	3,140.00
4.12.8	GRAPPLE RAKE 84"	$	3,510.00

SKID / COMPACT TRACK LOADER
OPTIONS - FIXED PRICING
SPECIFICATION 4.0

Spec #	Description		Price
4.13	**Landscape:**		
	Use this section to offer landscape options.		
4.13.1	BRUSHCUTTER, BR160, 60"	$	4,700.00
4.13.2	BRUSHCUTTER, BR166, 66"	$	4,910.00
4.13.3	BRUSHCUTTER, BR172, 72"	$	5,130.00
4.13.4	BRUSHCUTTER, BR272, 72" HF	$	5,350.00
4.13.5	BRUSHCUTTER, BR378, 78" HF,XPS	$	6,440.00
4.13.6	BRUSHCUTTER, BRX118 72"	$	11,850.00
4.13.7	BRUSHCUTTER, BRX318 72", HF, XPS	$	12,170.00
4.13.8	BRUSHCUTTER, BRX418	$	12,170.00
4.13.9	LANDSCAPE RAKE, LR15B	$	5,910.00
4.13.10	LANDSCAPE RAKE, LR18B	$	6,330.00
4.13.11	LANDSCAPE TILLER, LT13B	$	4,180.00
4.13.12	LANDSCAPE TILLER, LT18B	$	4,740.00
4.13.13	MULCHER, HM112C, 49", 16-18 GPM REQUIRED HYDRAULIC FLOW	$	19,330.00
4.13.14	MULCHER, HM115C, 58", 20-23 GPM REQUIRED HYDRAULIC FLOW	$	20,330.00
4.13.15	MULCHER, HM215C, 58", 25-31 GPM REQUIRED HYDRAULIC FLOW	$	21,080.00
4.13.16	MULCHER, HM315C, 58", 31-33 GPM REQUIRED HYDRAULIC FLOW	$	27,830.00
4.13.17	MULCHER, HM415C, 58.6", 36-41 GPM REQUIRED HYDRAULIC FLOW	$	30,300.00
4.13.18	MULCHER, HM418C, 67.2", 40-41 GPM REQUIRED HYDRAULIC FLOW	$	32,230.00
4.13.19	POWER BOX RAKE-HYDRAULIC,PR172	$	8,620.00
4.13.20	POWER BOX RAKE-HYDRAULIC,PR184	$	9,120.00
4.13.21	POWER BOX RAKE-HYDRAULIC,PR190	$	9,830.00
4.13.22	POWER BOX RAKE-MANUAL, PR172	$	7,910.00
4.13.23	POWER BOX RAKE-MANUAL, PR184	$	8,190.00
4.13.24	STUMP GRINDER, SG16B	$	6,370.00
4.13.25	STUMP GRINDER, SG18B	$	7,370.00
4.13.26	TRENCHER, T6B, 36" BOOM LENGTH	$	4,610.00
4.13.27	TRENCHER, T9B, 48" BOOM LENGTH	$	4,880.00
4.13.28	TRENCHER, T15B 6", 60" BOOM LENGTH	$	6,250.00
4.14	**Grader:**		
	Use this section to offer grader options.		
4.14.1	BB121, 84", GRADING BOX, INCLUDES TECHNOLOGY AND INSTALLATION.	$	15,890.00
4.14.2	BB124, 96", GRADING BOX, INCLUDES TECHNOLOGY AND INSTALLATION.	$	16,200.00
4.14.3	BLADE, DOZER, 6-WAY, 79"	$	5,070.00
4.14.4	BLADE, DOZER, 6-WAY, 92"	$	5,570.00
4.15	**Auger:**		
	Use this section to offer auger options.		
4.15.1	AUGER, A14B	$	1,900.00
4.15.2	AUGER, A19B	$	2,250.00
4.15.3	AUGER, A26B, HF	$	3,620.00
4.15.4	BIT, AUGER 6"	$	290.00
4.15.5	BIT, AUGER 9"	$	380.00
4.15.6	BIT, AUGER 12"	$	480.00
4.15.7	BIT, AUGER 15" STANDARD	$	580.00
4.15.8	BIT, AUGER 18"	$	670.00
4.15.9	BIT, AUGER 24"	$	860.00
4.15.10	BIT, AUGER 30"	$	1,050.00
4.15.11	BIT, AUGER 36"	$	1,230.00
4.15.12	BIT, AUGER 6" INDUSTRIAL	$	400.00
4.15.13	BIT, AUGER 9" INDUSTRIAL	$	490.00
4.15.14	BIT, AUGER 12" INDUSTRIAL	$	580.00
4.15.15	BIT, AUGER 16" INDUSTRIAL	$	700.00
4.15.16	BIT, AUGER 18" INDUSTRIAL	$	770.00
4.15.17	BIT, AUGER 24" INDUSTRIAL	$	1,130.00
4.15.18	TREE BIT, AUGER 24"	$	760.00
4.15.19	TREE BIT, AUGER 36"	$	1,190.00
4.15.20	ADAPTER, AUGER - HEX TO ROUND	$	140.00
4.15.21	ADAPTER, AUGER - ROUND TO HEX	$	120.00
4.15.22	EXTENSION, TELESCOPING 3'	$	280.00
4.15.23	EXTENSION, TELESCOPING 6'	$	470.00
4.15.24	EXTENSION, AUGER 12"	$	120.00
4.15.25	EXTENSION, AUGER 24"	$	170.00
4.16	**Wheel saw:**		
	Use this section to offer wheel saw options.		
4.16.1	WHEEL SAW, SW345B, 3"	$	19,340.00
4.16.2	WHEEL SAW, SW360B, 3"	$	21,910.00
4.16.3	WHEEL SAW, SW360B, 6"	$	22,270.00
4.16.4	WHEEL SAW, SW360B, 8"	$	23,320.00
4.16.5	WHEEL SAW, SW460B, 3"	$	22,270.00
4.16.6	WHEEL SAW, SW460, 6"	$	22,940.00
4.16.7	WHEEL SAW, SW460, 8"	$	23,320.00
4.16.8	WHEEL SAW, SW380B, 10"	$	30,810.00

SKID / COMPACT TRACK LOADER
OPTIONS - FIXED PRICING
SPECIFICATION 4.0

Spec #	Description		Price
4.17	**Vibratory roller:**		
	Use this section to offer vibratory roller options.		
4.17.1	CV16B, VIBRATORY COMPACTOR	$	9,470.00
4.17.2	CV18B, VIBRATORY COMPACTOR	$	10,150.00
4.18	**Other:**		
	Use this section to offer any other option not already covered.		
4.18.1	S305, SSL SHEARS - 9.4" JAW OPENING	$	23,510.00
4.18.2	MATERIAL HANDLING ARM, 84", 2,000 LB. CAPACITY	$	1,320.00
4.18.3	MB200, MIXING BUCKET	$	5,510.00
4.18.4	MB250, MIXING BUCKET	$	5,770.00
4.19	**EXTENDED WARRANTY OPTIONS**		
	Use this section to offer performance/warranty options, number these items starting with 20.1, 20.2, 20.3, etc. **(Specify years, miles or hours extended term covers.)**		
4.19.1	3 Year / 3,000 Hour Powertrain Warranty	$	380.00
4.19.2	3 Year / 4,000 Hour Powertrain Warranty	$	490.00
4.19.3	3 Year / 5,000 Hour Powertrain Warranty	$	550.00
4.19.4	3 Year / 3,000 Hour Powertrain + Hydraulics + Technology Warranty	$	650.00
4.19.5	3 Year / 4,000 Hour Powertrain + Hydraulics + Technology Warranty	$	840.00
4.19.6	3 Year / 5,000 Hour Powertrain + Hydraulics + Technology Warranty	$	960.00
4.19.7	3 Year - 3,000 Hour Premier Warranty	$	1,050.00
4.19.8	3 Year - 4,000 Hour Premier Warranty	$	1,350.00
4.19.9	3 Year - 5,000 Hour Premier Warranty	$	1,560.00
4.19.10	4 Year / 3,000 Hour Powertrain Warranty	$	430.00
4.19.11	4 Year / 4,000 Hour Powertrain Warranty	$	800.00
4.19.12	4 Year / 5,000 Hour Powertrain Warranty	$	910.00
4.19.13	4 Year / 3,000 Hour Powertrain + Hydraulics + Technology Warranty	$	750.00
4.19.14	4 Year / 4,000 Hour Powertrain + Hydraulics + Technology Warranty	$	1,390.00
4.19.15	4 Year / 5,000 Hour Powertrain + Hydraulics + Technology Warranty	$	1,580.00
4.19.16	4 Year - 3,000 Hour Premier Warranty	$	1,210.00
4.19.17	4 Year - 4,000 Hour Premier Warranty	$	2,230.00
4.19.18	4 Year - 5,000 Hour Premier Warranty	$	2,530.00
4.19.19	5 Year / 3,000 Hour Powertrain Warranty	$	500.00
4.19.20	5 Year / 4,000 Hour Powertrain Warranty	$	910.00
4.19.21	5 Year / 5,000 Hour Powertrain Warranty	$	1,410.00
4.19.22	5 Year / 3,000 Hour Powertrain + Hydraulics + Technology Warranty	$	870.00
4.19.23	5 Year / 4,000 Hour Powertrain + Hydraulics + Technology Warranty	$	1,570.00
4.19.24	5Year / 5,000 Hour Powertrain + Hydraulics + Technology Warranty	$	2,450.00
4.19.25	5 Year - 3,000 Hour Premier Warranty	$	1,400.00
4.19.26	5 Year - 4,000 Hour Premier Warranty	$	2,520.00
4.19.27	5 Year - 5,000 Hour Premier Warranty	$	3,930.00
4.19.28	6 Year / 3,000 Hour Powertrain Warranty	$	580.00
4.19.29	6 Year / 4,000 Hour Powertrain Warranty	$	1,020.00
4.19.30	6 Year / 5,000 Hour Powertrain Warranty	$	1,580.00
4.19.31	6 Year / 3,000 Hour Powertrain + Hydraulics + Technology Warranty	$	990.00
4.19.32	6 Year / 4,000 Hour Powertrain + Hydraulics + Technology Warranty	$	1,760.00
4.19.33	6Year / 5,000 Hour Powertrain + Hydraulics + Technology Warranty	$	2,730.00
4.19.34	6 Year - 3,000 Hour Premier Warranty	$	1,600.00
4.19.35	6 Year - 4,000 Hour Premier Warranty	$	2,840.00
4.19.36	6 Year - 5,000 Hour Premier Warranty	$	4,390.00
4.19.37	7 Year / 3,000 Hour Powertrain Warranty	$	650.00
4.19.38	7 Year / 4,000 Hour Powertrain Warranty	$	1,150.00
4.19.39	7 Year / 5,000 Hour Powertrain Warranty	$	1,750.00
4.19.40	7 Year / 3,000 Hour Powertrain + Hydraulics + Technology Warranty	$	1,140.00
4.19.41	7 Year / 4,000 Hour Powertrain + Hydraulics + Technology Warranty	$	1,980.00
4.19.42	7Year / 5,000 Hour Powertrain + Hydraulics + Technology Warranty	$	3,050.00
4.19.43	7 Year - 3,000 Hour Premier Warranty	$	1,830.00
4.19.44	7 Year - 4,000 Hour Premier Warranty	$	3,190.00
4.19.45	7 Year - 5,000 Hour Premier Warranty	$	4,910.00
4.19.46	*does not include travel charges		
4.19.47	*see attached warranty statement		
4.20	**NEW EQUIPMENT RENTAL PROGRAM**		
	If rental programs are available on the new equipment offered, with the option to purchase, list the hourly/weekly/monthly rental rate. Indicate the percent of rental fee paid by the purchaser that will be applied to the purchase price. See Solicitation Special Terms & Conditions.		
	Hourly Rental Rate:		$20.00
	Weekly Rental Rate:		$330.00
	Monthly Rental Rate:		$990.00
	Percent (%) of Rental Fee applied to purchase price:		100%

If the new rental equipment is purchased and finance
Charges are applicable for the actual rental term only.
State the actual interest rate here: _____Prime + 3%_____

SKID / COMPACT TRACK LOADER
OPTIONS - FIXED PRICING
SPECIFICATION 4.0

Spec #	Description		Price
4.21	**VENDOR OWNED RENTAL RETURN OR DEMO EQUIPMENT PROGRAM**		
	(See Solicitation Special Terms and Conditions.)		
	DEDUCT cost per Used Hour from the original Contract Price		$9.00
4.22	**DELIVERY STARTING POINT - City, State, Zip**		Nearest Ziegler Location
	(See Special Terms and Conditions - no flat rate allowed.)	**Price Per Loaded Mile:**	$3.00
4.23	**INSTALLATION - PER HOUR (Hourly Shop Rate):**		
	Installation services may be requested on an "as needed" basis - see special terms and conditions.)		$138.00
4.24	**PRICE FOR ADDITIONAL MANUALS** (1 of each included at no cost, per specs)		
	ADDITIONAL SERVICE MANUAL		
		Digital	$ 50.00
		Paper	$ 950.00
	ADDITIONAL PARTS MANUAL		
		Digital	$ 50.00
		Paper	$ 50.00
	PRICE FOR ADDITIONAL OPERATIONS MANUAL		
		Digital	$ 50.00
		Paper	$ 50.00
4.25	**DISCOUNT OFF LIST PRICE FOR RELATED PARTS & ACCESSORIES**		%
	(See Special Terms and Conditions)		

T-631
Tractors: Skid Steers Attachments
 # 727-1019

Skid Steer / Compact Track Loaders

FIXED PRICING
(BASE UNIT INFORMATION)
Specification 3.0

October, 2019

Vendor Name:	**Ziegler Inc.**
Contact Person:	**Cory Dalbec, Chris Rice**
Street Address:	**901 West 94th Street**
P.O. Box:	
City, State, Zip	**Bloomington, MN 55420**
Phone #:	**952.888.4121**
Toll Free #:	**800.352.2812**
Email Address:	**cory.dalbec@zieglercat.com, chris.rice@zieglercat.com**
Website:	www.zieglercat.com

Spec #	Information Requested	Answer
3.1	**MAKE AND MODEL**	Caterpillar 232D3
	Engine Type and SAE net HP	Cat C2.2 (turbo) 65.8 HP
	Tier	Tier 4 Final
	Length w/o attachments	99.3"
	Height with operator cab	79.9"
	Ground clearance	6.7"
	Maximum height to bucket hinge pin	118.1"
	Breakout force	3,928 lb
	Reach at maximum height	25.7"
	Dump angle at maximum height	47.4 Degrees
	Dump height with standard bucket	88.7"
	Front clearance circle with standard bucket	77.8"
	Rear clearance circle	59.6"
	Tipping load - SAE rated	3,800 lb
	Rated operating capacity - SAE	1,900 lb
	Standard bucket capacity - SAE heaped rating	.52 CYD
	Operating weight - SAE rated	6,514 lb
	Travel speed	11.1 MPH (Two Speed)
	Fuel tank capacity	15.1 gal
	Cold weather starting assist	Yes
	Battery CCA	850 CCA
	Alternator size - amps	80 Amps
	Transmission type	Hydrostatic
	Tire / Track size / width	TIRES, 10X16.5 GA 8PR CAT- 60" WIDTH
	Final drive chains and drive method	#100 pre-stressed chain Direct sprocket to chain drive
	Final drive chain adjustment / maintenance	500 Hours
	Gauges / instrumentation	Gauges: fuel level, hour meter Instrumentation: Engine coolant temperature, engine oil pressure, hydraulic oil temperature
	Pump type - GPM and PSI	Gear Pump - 18 gal/min and 3,336 psi
	Control valves	Hydraulic 3 section
	Hydraulic oil cooler	Included - air to oil
	Drive controls	Electro/Hydraulic - hand controls
	Lift and tilt controls	Electro/Hydraulic - hand controls
	Engine speed control	Both foot and hand control
	Work lights - front	Included 2 each
	Work lights - rear	Included 2 each
	Warranty	2 year Unlimited hour parts/labor
	BASE UNIT PRICE:	$ 38,430.00

SKID / COMPACT TRACK LOADER
OPTIONS - FIXED PRICING
SPECIFICATION 4.0

Spec #	Description	Price
	Price for base unit:	$ 38,430.00
4.1	**Skid/Compact Track Loader Options:** Use this section to offer additional skid/track loader options such as hand controls, gauges, heater, enclosed cab etc.. These options should be for skid steer power unit and not attachments.	
4.1.1	PRESSURIZED CAB, HEATER/DEFROSTER & DOOR	$ (1,390.00)
4.1.2	PRESSURIZED CAB, HEATER/DEFROSTER, AIR CONDITIONING & DOOR	INCLUDED
4.1.3	OPEN ROPS	$ (3,020.00)
4.1.4	AIR SUSPENSION SEAT-CLOTH	INCLUDED
4.1.5	PROPORTIONAL WORK TOOL CONTROL	INCLUDED
4.1.6	TWO SPEED CONTROL	INCLUDED
4.1.7	HYDRAULIC COUPLER	INCLUDED
4.1.8	FAN, COOLING, DEMAND	INCLUDED
4.1.9	HIGH FLOW HYDRAULICS	$ 2,080.00
4.1.10	DOOR, CAB, POLYCARBONATE	$ 150.00
4.1.11	DOOR, CAB, GLASS	INCLUDED
4.1.12	RADIO AM-FM, CD, BLUETOOTH	INCLUDED
4.1.13	ADVANCED DISPLAY WITH BACKUP CAMERA	INCLUDED
4.1.14	DUAL SELF-LEVELING	INCLUDED
4.1.15	HEAVY DUTY BATTERY W/DISCONNECT	$ 90.00
4.1.16	HALOGEN LIGHTS	INCLUDED
4.1.17	BEACON LIGHT	$ 150.00
4.1.18	REAR LIGHTS	INCLUDED
4.1.19	REAR LIGHTS, STOP/TAIL/TURN	$ 540.00
4.1.20	ROADING LIGHTS	$ 680.00
4.1.21	SEAT BELT, 2"	INCLUDED
4.1.22	SEAT BELT, 3"	$ 200.00
4.1.23	RETURN TO DIG/ WORKTOOL POSITIONER	INCLUDED
4.1.24	COUNTERWEIGHT, MACHINE EXTERNAL	$ 350.00
4.1.25	MOUNTING, FIRE EXTINGUISHER	$ 290.00
4.1.26	SINGLE EYE LIFTING POINT	$ 1,200.00
4.1.27	LIFTING EYE 4 POINT	$ 130.00
4.1.28	FOPS, LEVEL 2	$ 2,700.00
4.1.29	HEATER, ENGINE COOLANT, 120V	$ 140.00
4.1.30	PRODUCT LINK, CELLULAR, PL243	INCLUDED
4.1.31	PRODUCT LINK, CELLULAR, PL641	$ 320.00
4.1.32	OIL, HYDRAULIC, COLD OPERATION	$ 450.00
4.1.33	PATTERN CHANGER	$ 750.00
4.1.34	CASE DEDICATED CONTROLS	$ 100.00
4.1.35	PAINT, CUSTOM	$ 1,460.00
4.1.36	CORRISION INHIBITOR - EquipCoat Spray / Clear Coat	$ 2,500.00
4.1.37	TIRES, 10X16.5 GA 8PR CAT- 60" WIDTH	INCLUDED
4.1.38	TIRES, 10X16.5 GA 8PR CAT- 66" WIDTH	$ 550.00
4.2	**Bucket Options:** Use this section to offer bucket options such as standard, snow or combination buckets, etc..	
4.2.1	BUCKET-GENERAL PURPOSE, BOLT ON CUTTING EDGE 62"	$ 1,130.00
4.2.2	BUCKET-GENERAL PURPOSE, BOLT ON CUTTING EDGE 68"	$ 1,230.00
4.2.3	BUCKET-GENERAL PURPOSE, BOLT ON CUTTING EDGE 74"	$ 1,360.00
4.2.4	BUCKET-GENERAL PURPOSE, BOLT ON CUTTING EDGE 80"	$ 1,440.00
4.2.5	BUCKET-GENERAL PURPOSE, BOLT ON CUTTING EDGE 86"	$ 1,540.00
4.2.6	BUCKET-LIGHT MATERIAL, BOLT ON CUTTING EDGE 74"	$ 1,390.00
4.2.7	BUCKET-LIGHT MATERIAL, BOLT ON CUTTING EDGE 80"	$ 1,490.00
4.2.8	BUCKET-LIGHT MATERIAL, BOLT ON CUTTING EDGE 86" (1.1 CU. YD.)	$ 1,600.00
4.2.9	BUCKET-LIGHT MATERIAL, BOLT ON CUTTING EDGE 86" (1.4 CU. YD.)	$ 1,780.00
4.2.10	BUCKET-LIGHT MATERIAL, BOLT ON CUTTING EDGE 98"	$ 1,800.00
4.2.11	BUCKET-LIGHT MATERIAL, BOLT ON CUTTING EDGE 104"	$ 1,870.00
4.2.12	BUCKET-LOW PROFILE, BOLT ON CUTTING EDGE 56"	$ 740.00
4.2.13	BUCKET-LOW PROFILE, BOLT ON CUTTING EDGE 62"	$ 850.00
4.2.14	BUCKET-LOW PROFILE, BOLT ON CUTTING EDGE 68"	$ 950.00
4.2.15	BUCKET-LOW PROFILE, BOLT ON CUTTING EDGE 74"	$ 1,050.00
4.2.16	BUCKET-LOW PROFILE, BOLT ON CUTTING EDGE 80"	$ 1,160.00
4.2.17	BUCKET-MULTI-PURPOSE, BOLT ON CUTTING EDGE W/SG, 62"	$ 3,030.00
4.2.18	BUCKET-MULTI-PURPOSE, BOLT ON TEETH W/SG 62"	$ 3,030.00
4.2.19	BUCKET-MULTI-PURPOSE, W/BO EDGE 68" W/SG	$ 3,290.00
4.2.20	BUCKET-MULTI-PURPOSE, BOLT ON TEETH 68" W/SG	$ 3,290.00
4.2.21	BUCKET-MULTI-PURPOSE, BOLT ON CUTTING EDGE 74" W/SG	$ 3,540.00
4.2.22	BUCKET-MULTI-PURPOSE, BOLT ON TEETH 74" W/SG	$ 3,540.00
4.2.23	BUCKET-MULTI-PURPOSE, BOLT ON CUTTING EDGE 80" W/SG	$ 3,800.00
4.2.24	BUCKET-MULTI-PURPOSE, BOLT ON TEETH 80" W/SG	$ 3,800.00
4.2.25	BUCKET-MULTI-PURPOSE, BOLT ON CUTTING EDGE 86" W/SG	$ 4,050.00
4.2.26	BUCKET-MULTI-PURPOSE, BOLT ON TEETH 86" W/SG	$ 4,050.00
4.2.27	BUCKET-TOOTH, BOLT ON TEETH 62"	$ 1,180.00
4.2.28	BUCKET-TOOTH, BOLT ON TEETH 68"	$ 1,270.00
4.2.29	BUCKET-TOOTH, BOLT ON TEETH 74"	$ 1,360.00
4.2.30	BUCKET-TOOTH, BOLT ON TEETH 80"	$ 1,470.00
4.2.31	BUCKET-TOOTH, BOLT ON TEETH 86"	$ 1,560.00
4.2.32	BUCKET-UTILITY, BOLT ON CUTTING EDGE 62"	$ 1,030.00
4.2.33	BUCKET-UTILITY, BOLT ON CUTTING EDGE 68"	$ 1,130.00
4.2.34	BUCKET-UTILITY, BOLT ON CUTTING EDGE 74"	$ 1,230.00

SKID / COMPACT TRACK LOADER
OPTIONS - FIXED PRICING
SPECIFICATION 4.0

Spec #	Description		Price
4.3	**Overtire tracks:**		
	Use this section to offer overtire tracks.		
4.4	**Forks:**		
	Use this section to offer fork options, such as pallet forks, bale handler, etc..		
4.4.1	FORKS, 48" PALLET W/ CARRIAGE	$	710.00
4.4.2	FORKS, 66" INDUSTRIAL GRAPPLE	$	4,640.00
4.4.3	FORKS, 72" INDUSTRIAL GRAPPLE	$	5,540.00
4.5	**Adaptor Plate:**		
	Use this section to offer adaptor plate options.		
	Universal Adapter Plate	$	220.00
4.6	**Snowblower:**		
	Use this section to offer snowblower options.		
4.6.1	SR115 SNOW BLOWER, 60" WORKING WIDTH, 20-23 GPM HYDRAULIC FLOW	$	6,990.00
4.6.2	SR118 SNOW BLOWER, 72" WORKING WIDTH, 20-23 GPM HYDRAULIC FLOW	$	7,100.00
4.6.3	SR121 SNOW BLOWER, 85" WORKING WIDTH, 20-23 GPM HYDRAULIC FLOW	$	7,200.00
4.6.4	SR318 SNOW BLOWER, 72" WORKING WIDTH, 31-33 GPM HYDRAULIC FLOW	$	7,470.00
4.6.5	SR321 SNOW BLOWER, 85" WORKING WIDTH, 31-33 GPM HYDRAULIC FLOW	$	7,950.00
4.7	**Sweeper:**		
	Use this section to offer sweeper options.		
4.7.1	BA118C, MANUAL ANGLE, 83" WIDTH	$	5,970.00
4.7.2	BA118C, HYDRAULIC ANGLE, 83" WIDTH	$	7,120.00
4.7.3	BP115C, PICKUP BROOM	$	5,530.00
4.7.4	BP118C, PICKUP BROOM	$	5,940.00
4.7.5	BU115, UTILITY BROOM	$	3,770.00
4.7.6	BU118, UTILITY BROOM	$	4,100.00
4.8	**Backhoe:**		
	Use this section to offer backhoe options.		
4.8.1	BACKHOE, BH150 (INCLUDES D SERIES MOUNTING BRACKET AND 24" BUCKET).	$	14,830.00
4.8.2	BACKHOE, BH160 W/ AUXILIARY (INCLUDES D SERIES MOUNTING BRACKET AND 24" BUCKET).	$	15,280.00
4.9	**Planer:**		
	Use this section to offer planer options.		
4.9.1	COLD PLANER, PC104B, 14" WORKING WIDTH, 16-21 GPM REQUIRED HYDRAULIC FLOW	$	10,000.00
4.9.2	COLD PLANER, PC205B, 18" WORKING WIDTH, 21-31 GPM REQUIRED HYDRAULIC FLOW	$	12,550.00
4.9.3	COLD PLANER, PC305B, 18" WORKING WIDTH, 26-33 GPM REQUIRED HYDRAULIC FLOW	$	15,400.00
4.9.4	COLD PLANER, PC306B, 24" WORKING WIDTH, 26-33 GPM REQUIRED HYDRAULIC FLOW	$	16,510.00
4.9.5	COLD PLANER, PC408B, 30" WORKING WIDTH, 40 GPM REQUIRED HYDRAULIC FLOW	$	19,490.00
4.9.6	COLD PLANER, PC310B, 39" WORKING WIDTH, 33 GPM REQUIRED HYDRAULIC FLOW	$	23,010.00
4.9.7	COLD PLANER, PC412, 47" WORKING WIDTH, 40 GPM REQUIRED HYDRAULIC FLOW	$	25,560.00
4.10	**Snow Plow:**		
	Use this section to offer snow plow options.		
4.10.1	SNOW PLOW, 72"	$	3,580.00
4.10.2	SNOW PLOW, 84"	$	3,780.00
4.10.3	SNOW PLOW, 96"	$	3,980.00
4.10.4	SNOW PLOW, 108"	$	4,240.00
4.10.5	SNOW PLOW, 120"	$	4,780.00
4.10.6	SNOW PUSH, SSL, STD DTY 8'	$	2,520.00
4.10.7	SNOW PUSH, SSL, STD DTY 10'	$	2,970.00
4.10.8	SNOW PUSH, SSL, STD DTY 12'	$	3,530.00
4.11	**Hydraulic breaker:**		
	Use this section to offer hydraulic breaker options.		
4.11.1	H55S HAMMER WITH SSL MOUNTS	$	7,850.00
4.11.2	H65S HAMMER WITH SSL MOUNTS	$	9,230.00
4.11.3	B4 HAMMER, NON-SILENCED WITH SSL MOUNTS	$	4,390.00
4.11.4	B4S HAMMER, SILENCED WITH SSL MOUNTS	$	4,880.00
4.11.5	B6S HAMMER, SILENCED WITH SSL MOUNTS	$	7,100.00
4.11.6	B6S HAMMER, NON-SILENCED WITH SSL MOUNTS	$	6,390.00
4.11.7	B8S HAMMER, SILENCED WITH SSL MOUNTS	$	9,430.00
4.11.8	B8 HAMMER, NON-SILENCED WITH SSL MOUNTS	$	8,490.00
4.12	**Grapple:**		
	Use this section to offer grapple options.		
4.12.1	BUCKET, UTILITY GRAPPLE 68"	$	2,430.00
4.12.2	BUCKET, UTILITY GRAPPLE 74"	$	2,530.00
4.12.3	BUCKET, INDUSTRIAL GRAPPLE 62"	$	3,590.00
4.12.4	BUCKET, INDUSTRIAL GRAPPLE 68"	$	3,760.00
4.12.5	BUCKET, INDUSTRIAL GRAPPLE 74"	$	4,210.00
4.12.6	BUCKET, INDUSTRIAL GRAPPLE 80"	$	4,640.00
4.12.7	GRAPPLE RAKE 72"	$	3,140.00
4.12.8	GRAPPLE RAKE 84"	$	3,510.00

SKID / COMPACT TRACK LOADER
OPTIONS - FIXED PRICING
SPECIFICATION 4.0

Spec #	Description	Price
4.13	**Landscape:**	
	Use this section to offer landscape options.	
4.13.1	BRUSHCUTTER, BR160, 60"	$ 4,700.00
4.13.2	BRUSHCUTTER, BR166, 66"	$ 4,910.00
4.13.3	BRUSHCUTTER, BR172, 72"	$ 5,130.00
4.13.4	BRUSHCUTTER, BR272, 72" HF	$ 5,350.00
4.13.5	BRUSHCUTTER, BR378, 78" HF,XPS	$ 6,440.00
4.13.6	BRUSHCUTTER, BRX118 72"	$ 11,850.00
4.13.7	BRUSHCUTTER, BRX318 72", HF, XPS	$ 12,170.00
4.13.8	BRUSHCUTTER, BRX418	$ 12,170.00
4.13.9	LANDSCAPE RAKE, LR15B	$ 5,910.00
4.13.10	LANDSCAPE RAKE, LR18B	$ 6,330.00
4.13.11	LANDSCAPE TILLER, LT13B	$ 4,180.00
4.13.12	LANDSCAPE TILLER, LT18B	$ 4,740.00
4.13.13	MULCHER, HM112C, 49", 16-18 GPM REQUIRED HYDRAULIC FLOW	$ 19,330.00
4.13.14	MULCHER, HM115C, 58", 20-23 GPM REQUIRED HYDRAULIC FLOW	$ 20,330.00
4.13.15	MULCHER, HM215C, 58", 25-31 GPM REQUIRED HYDRAULIC FLOW	$ 21,080.00
4.13.16	MULCHER, HM315C, 58", 31-33 GPM REQUIRED HYDRAULIC FLOW	$ 27,830.00
4.13.17	MULCHER, HM415C, 58.6", 36-41 GPM REQUIRED HYDRAULIC FLOW	$ 30,300.00
4.13.18	MULCHER, HM418C, 67.2", 40-41 GPM REQUIRED HYDRAULIC FLOW	$ 32,230.00
4.13.19	POWER BOX RAKE-HYDRAULIC,PR172	$ 8,620.00
4.13.20	POWER BOX RAKE-HYDRAULIC,PR184	$ 9,120.00
4.13.21	POWER BOX RAKE-HYDRAULIC,PR190	$ 9,830.00
4.13.22	POWER BOX RAKE-MANUAL, PR172	$ 7,910.00
4.13.23	POWER BOX RAKE-MANUAL, PR184	$ 8,190.00
4.13.24	STUMP GRINDER, SG16B	$ 6,370.00
4.13.25	STUMP GRINDER, SG18B	$ 7,370.00
4.13.26	TRENCHER, T6B, 36" BOOM LENGTH	$ 4,610.00
4.13.27	TRENCHER, T9B, 48" BOOM LENGTH	$ 4,880.00
4.13.28	TRENCHER, T15B 6", 60" BOOM LENGTH	$ 6,250.00
4.14	**Grader:**	
	Use this section to offer grader options.	
4.14.1	BB121, 84", GRADING BOX, INCLUDES TECHNOLOGY AND INSTALLATION.	$ 15,890.00
4.14.2	BB124, 96", GRADING BOX, INCLUDES TECHNOLOGY AND INSTALLATION.	$ 16,200.00
4.14.3	BLADE, DOZER, 6-WAY, 79"	$ 5,070.00
4.14.4	BLADE, DOZER, 6-WAY, 92"	$ 5,570.00
4.15	**Auger:**	
	Use this section to offer auger options.	
4.15.1	AUGER, A14B	$ 1,900.00
4.15.2	AUGER, A19B	$ 2,250.00
4.15.3	AUGER, A26B, HF	$ 3,620.00
4.15.4	BIT, AUGER 6"	$ 290.00
4.15.5	BIT, AUGER 9"	$ 380.00
4.15.6	BIT, AUGER 12"	$ 480.00
4.15.7	BIT, AUGER 15" STANDARD	$ 580.00
4.15.8	BIT, AUGER 18"	$ 670.00
4.15.9	BIT, AUGER 24"	$ 860.00
4.15.10	BIT, AUGER 30"	$ 1,050.00
4.15.11	BIT, AUGER 36"	$ 1,230.00
4.15.12	BIT, AUGER 6" INDUSTRIAL	$ 400.00
4.15.13	BIT, AUGER 9" INDUSTRIAL	$ 490.00
4.15.14	BIT, AUGER 12" INDUSTRIAL	$ 580.00
4.15.15	BIT, AUGER 16" INDUSTRIAL	$ 700.00
4.15.16	BIT, AUGER 18" INDUSTRIAL	$ 770.00
4.15.17	BIT, AUGER 24" INDUSTRIAL	$ 1,130.00
4.15.18	TREE BIT, AUGER 24"	$ 760.00
4.15.19	TREE BIT, AUGER 36"	$ 1,190.00
4.15.20	ADAPTER, AUGER - HEX TO ROUND	$ 140.00
4.15.21	ADAPTER, AUGER - ROUND TO HEX	$ 120.00
4.15.22	EXTENSION, TELESCOPING 3'	$ 280.00
4.15.23	EXTENSION, TELESCOPING 6'	$ 470.00
4.15.24	EXTENSION, AUGER 12"	$ 120.00
4.15.25	EXTENSION, AUGER 24"	$ 170.00

SKID / COMPACT TRACK LOADER
OPTIONS - FIXED PRICING
SPECIFICATION 4.0

Spec #	Description	Price
4.16	**Wheel saw:**	
	Use this section to offer wheel saw options.	
4.16.1	WHEEL SAW, SW345B, 3"	$ 19,340.00
4.16.2	WHEEL SAW, SW360B, 3"	$ 21,910.00
4.16.3	WHEEL SAW, SW360B, 6"	$ 22,270.00
4.16.4	WHEEL SAW, SW360B, 8"	$ 23,320.00
4.16.5	WHEEL SAW, SW460B, 3"	$ 22,270.00
4.16.6	WHEEL SAW, SW460, 6"	$ 22,940.00
4.16.7	WHEEL SAW, SW460, 8"	$ 23,320.00
4.16.8	WHEEL SAW, SW380B, 10"	$ 30,810.00
4.17	**Vibratory roller:**	
	Use this section to offer vibratory roller options.	
4.17.1	CV16B, VIBRATORY COMPACTOR	$ 9,470.00
4.17.2	CV18B, VIBRATORY COMPACTOR	$ 10,150.00
4.18	**Other:**	
	Use this section to offer any other option not already covered.	
4.18.1	S305, SSL SHEARS - 9.4" JAW OPENING	$ 23,510.00
4.18.2	MATERIAL HANDLING ARM, 84", 2,000 LB. CAPACITY	$ 1,320.00
4.18.3	MB200, MIXING BUCKET	$ 5,510.00
4.18.4	MB250, MIXING BUCKET	$ 5,770.00
4.19	**EXTENDED WARRANTY OPTIONS**	
	Use this section to offer performance/warranty options, number these items starting with 20.1, 20.2, 20.3, etc. **(Specify years, miles or hours extended term covers.)**	
4.19.1	3 Year / 3,000 Hour Powertrain Warranty	$ 360.00
4.19.2	3 Year / 4,000 Hour Powertrain Warranty	$ 460.00
4.19.3	3 Year / 5,000 Hour Powertrain Warranty	$ 520.00
4.19.4	3 Year / 3,000 Hour Powertrain + Hydraulics + Technology Warranty	$ 630.00
4.19.5	3 Year / 4,000 Hour Powertrain + Hydraulics + Technology Warranty	$ 810.00
4.19.6	3 Year / 5,000 Hour Powertrain + Hydraulics + Technology Warranty	$ 930.00
4.19.7	3 Year - 3,000 Hour Premier Warranty	$ 990.00
4.19.8	3 Year - 4,000 Hour Premier Warranty	$ 1,270.00
4.19.9	3 Year - 5,000 Hour Premier Warranty	$ 1,470.00
4.19.10	4 Year / 3,000 Hour Powertrain Warranty	$ 410.00
4.19.11	4 Year / 4,000 Hour Powertrain Warranty	$ 750.00
4.19.12	4 Year / 5,000 Hour Powertrain Warranty	$ 850.00
4.19.13	4 Year / 3,000 Hour Powertrain + Hydraulics + Technology Warranty	$ 730.00
4.19.14	4 Year / 4,000 Hour Powertrain + Hydraulics + Technology Warranty	$ 1,340.00
4.19.15	4 Year / 5,000 Hour Powertrain + Hydraulics + Technology Warranty	$ 1,520.00
4.19.16	4 Year - 3,000 Hour Premier Warranty	$ 1,150.00
4.19.17	4 Year - 4,000 Hour Premier Warranty	$ 1,340.00
4.19.18	4 Year - 5,000 Hour Premier Warranty	$ 2,390.00
4.19.19	5 Year / 3,000 Hour Powertrain Warranty	$ 480.00
4.19.20	5 Year / 4,000 Hour Powertrain Warranty	$ 850.00
4.19.21	5 Year / 5,000 Hour Powertrain Warranty	$ 1,320.00
4.19.22	5 Year / 3,000 Hour Powertrain + Hydraulics + Technology Warranty	$ 840.00
4.19.23	5 Year / 4,000 Hour Powertrain + Hydraulics + Technology Warranty	$ 1,510.00
4.19.24	5Year / 5,000 Hour Powertrain + Hydraulics + Technology Warranty	$ 2,360.00
4.19.25	5 Year - 3,000 Hour Premier Warranty	$ 1,320.00
4.19.26	5 Year - 4,000 Hour Premier Warranty	$ 2,390.00
4.19.27	5 Year - 5,000 Hour Premier Warranty	$ 3,730.00
4.19.28	6 Year / 3,000 Hour Powertrain Warranty	$ 540.00
4.19.29	6 Year / 4,000 Hour Powertrain Warranty	$ 960.00
4.19.30	6 Year / 5,000 Hour Powertrain Warranty	$ 1,490.00
4.19.31	6 Year / 3,000 Hour Powertrain + Hydraulics + Technology Warranty	$ 960.00
4.19.32	6 Year / 4,000 Hour Powertrain + Hydraulics + Technology Warranty	$ 1,710.00
4.19.33	6Year / 5,000 Hour Powertrain + Hydraulics + Technology Warranty	$ 2,640.00
4.19.34	6 Year - 3,000 Hour Premier Warranty	$ 1,520.00
4.19.35	6 Year - 4,000 Hour Premier Warranty	$ 2,690.00
4.19.36	6 Year - 5,000 Hour Premier Warranty	$ 4,160.00
4.19.37	7 Year / 3,000 Hour Powertrain Warranty	$ 620.00
4.19.38	7 Year / 4,000 Hour Powertrain Warranty	$ 1,080.00
4.19.39	7 Year / 5,000 Hour Powertrain Warranty	$ 1,650.00
4.19.40	7 Year / 3,000 Hour Powertrain + Hydraulics + Technology Warranty	$ 1,090.00
4.19.41	7 Year / 4,000 Hour Powertrain + Hydraulics + Technology Warranty	$ 1,920.00
4.19.42	7Year / 5,000 Hour Powertrain + Hydraulics + Technology Warranty	$ 2,940.00
4.19.43	7 Year - 3,000 Hour Premier Warranty	$ 1,730.00
4.19.44	7 Year - 4,000 Hour Premier Warranty	$ 3,030.00
4.19.45	7 Year - 5,000 Hour Premier Warranty	$ 4,650.00
4.19.46	*does not include travel charges	
4.19.47	*see attached warranty statement	

SKID / COMPACT TRACK LOADER
OPTIONS - FIXED PRICING
SPECIFICATION 4.0

Spec #	Description	Price
4.20	**NEW EQUIPMENT RENTAL PROGRAM**	
	If rental programs are available on the new equipment offered, with the option to purchase, list the hourly/weekly/monthly rental rate. Indicate the percent of rental fee paid by the purchaser that will be applied to the purchase price. See Solicitation Special Terms & Conditions.	
	Hourly Rental Rate:	$20.00
	Weekly Rental Rate:	$330.00
	Monthly Rental Rate:	$990.00
	Percent (%) of Rental Fee applied to purchase price:	100%
	If the new rental equipment is purchased and finance	
	Charges are applicable for the actual rental term only.	
	State the actual interest rate here: _____Prime + 3%_____	
4.21	**VENDOR OWNED RENTAL RETURN OR DEMO EQUIPMENT PROGRAM**	
	(See Solicitation Special Terms and Conditions.)	
	DEDUCT cost per Used Hour from the original Contract Price	$9.00
4.22	**DELIVERY STARTING POINT - City, State, Zip**	Nearest Ziegler Location
	(See Special Terms and Conditions - no flat rate allowed.) **Price Per Loaded Mile:**	$3.00
4.23	**INSTALLATION - PER HOUR (Hourly Shop Rate):**	
	Installation services may be requested on an "as needed" basis - see special terms and conditions.)	$138.00
4.24	**PRICE FOR ADDITIONAL MANUALS** (1 of each included at no cost, per specs)	
	ADDITIONAL SERVICE MANUAL	
	Digital	$ 50.00
	Paper	$ 950.00
	ADDITIONAL PARTS MANUAL	
	Digital	$ 50.00
	Paper	$ 50.00
	PRICE FOR ADDITIONAL OPERATIONS MANUAL	
	Digital	$ 50.00
	Paper	$ 50.00
4.25	**DISCOUNT OFF LIST PRICE FOR RELATED PARTS & ACCESSORIES**	%
	(See Special Terms and Conditions)	

T-631
Tractors: Skid Steers Attachments
 # 727-1019

Skid Steer / Compact Track Loaders

FIXED PRICING
(BASE UNIT INFORMATION)
Specification 3.0

October, 2019

Vendor Name:	**Ziegler Inc.**
Contact Person:	**Cory Dalbec, Chris Rice**
Street Address:	**901 West 94th Street**
P.O. Box:	
City, State, Zip	**Bloomington, MN 55420**
Phone #:	**952.888.4121**
Toll Free #:	**800.352.2812**
Email Address:	**cory.dalbec@zieglercat.com, chris.rice@zieglercat.com**
Website:	www.zieglercat.com

Spec #	Information Requested	Answer
3.1	**MAKE AND MODEL**	Caterpillar 236D3
	Engine Type and SAE net HP	Cat 3.3B DIT (turbo) 73.2 HP
	Tier	Tier 4 Final
	Length w/o attachments	108.9"
	Height with operator cab	82.0"
	Ground clearance	7.7"
	Maximum height to bucket hinge pin	122.9"
	Breakout force	5,003 lb
	Reach at maximum height	16.0"
	Dump angle at maximum height	48.0 Degrees
	Dump height with standard bucket	92.9"
	Front clearance circle with standard bucket	83.0"
	Rear clearance circle	64.5"
	Tipping load - SAE rated	3,600 lb
	Rated operating capacity - SAE	2,000 lb
	Standard bucket capacity - SAE heaped rating	.52 CYD
	Operating weight - SAE rated	6,567 lb
	Travel speed	10.6 MPH (Two Speed)
	Fuel tank capacity	24.8 gal
	Cold weather starting assist	Yes
	Battery CCA	850 CCA
	Alternator size - amps	80 Amps
	Transmission type	Hydrostatic
	Tire / Track size / width	TIRES, 12/16.5 CAT 10PR
	Final drive chains and drive method	#100 pre-stressed chain Direct sprocket to chain drive
	Final drive chain adjustment / maintenance	500 Hours
	Gauges / instrumentation	Gauges: fuel level, hour meter Instrumentation: Engine coolant temperature, engine oil pressure, hydraulic oil temperature
	Pump type - GPM and PSI	Gear Pump - 30 gal/min and 3,335 psi
	Control valves	Hydraulic 3 section
	Hydraulic oil cooler	Included - air to oil
	Drive controls	Electro/Hydraulic - hand controls
	Lift and tilt controls	Electro/Hydraulic - hand controls
	Engine speed control	Both foot and hand control
	Work lights - front	Included 2 each
	Work lights - rear	Included 2 each
	Warranty	2 year Unlimited hour parts/labor
	BASE UNIT PRICE:	$ 40,480.00

SKID / COMPACT TRACK LOADER
OPTIONS - FIXED PRICING
SPECIFICATION 4.0

Spec #	Description	Price
	Price for base unit:	$ 40,480.00
4.1	**Skid/Compact Track Loader Options:** Use this section to offer additional skid/track loader options such as hand controls, gauges, heater, enclosed cab etc.. These options should be for skid steer power unit and not attachments.	
4.1.1	PRESSURIZED CAB, HEATER/DEFROSTER & DOOR	$ (1,390.00)
4.1.2	PRESSURIZED CAB, HEATER/DEFROSTER, AIR CONDITIONING & DOOR	INCLUDED
4.1.3	OPEN ROPS	$ (3,020.00)
4.1.4	AIR SUSPENSION SEAT-VINYL	$ (10.00)
4.1.5	AIR SUSPENSION SEAT-CLOTH	INCLUDED
4.1.6	PROPORTIONAL WORK TOOL CONTROL	INCLUDED
4.1.7	HAND & FOOT CONTROLS	$ 290.00
4.1.8	TWO SPEED CONTROL	INCLUDED
4.1.9	HYDRAULIC COUPLER	INCLUDED
4.1.10	FAN, COOLING, DEMAND	INCLUDED
4.1.11	FAN, COOLING, DEMAND, REVERSING	$ 570.00
4.1.12	RIDE CONTROL	$ 710.00
4.1.13	HIGH FLOW HYDRAULICS	$ 2,080.00
4.1.14	DOOR, CAB, POLYCARBONATE	$ 150.00
4.1.15	DOOR, CAB, GLASS	INCLUDED
4.1.16	RADIO AM-FM, CD, BLUETOOTH	INCLUDED
4.1.17	ADVANCED DISPLAY WITH BACKUP CAMERA	INCLUDED
4.1.18	PROPORTIONAL HYDRAULICS	$ (280.00)
4.1.19	DUAL SELF-LEVELING	INCLUDED
4.1.20	HEAVY DUTY BATTERY W/DISCONNECT	$ 90.00
4.1.21	LIGHTS LED	INCLUDED
4.1.22	HALOGEN LIGHTS	$ (190.00)
4.1.23	BEACON LIGHT	$ 150.00
4.1.24	REAR LIGHTS	INCLUDED
4.1.25	REAR LIGHTS, STOP/TAIL/TURN	$ 540.00
4.1.26	ROADING LIGHTS	$ 680.00
4.1.27	SEAT BELT, 2"	INCLUDED
4.1.28	SEAT BELT, 3"	$ 200.00
4.1.29	RETURN TO DIG/ WORKTOOL POSITIONER	INCLUDED
4.1.30	COUNTERWEIGHT, MACHINE EXTERNAL	$ 700.00
4.1.31	MOUNTING, FIRE EXTINGUISHER	$ 290.00
4.1.32	SINGLE EYE LIFTING POINT	$ 1,200.00
4.1.33	LIFTING EYE 4 POINT	$ 130.00
4.1.34	FOPS, LEVEL 2	$ 2,700.00
4.1.35	HEATER, ENGINE COOLANT, 120V	$ 140.00
4.1.36	PRODUCT LINK, CELLULAR, PL243	INCLUDED
4.1.37	PRODUCT LINK, CELLULAR, PL641	$ 320.00
4.1.38	OIL, HYDRAULIC, COLD OPERATION	$ 450.00
4.1.39	PATTERN CHANGER	$ 750.00
4.1.40	CASE DEDICATED CONTROLS	$ 100.00
4.1.41	PAINT, CUSTOM	$ 1,460.00
4.1.42	CORRISION INHIBITOR - EquipCoat Spray / Clear Coat	$ 2,500.00
4.1.43	TIRES, 12/16.5 CAT 10PR	INCLUDED
4.1.44	TIRES, 31 X 6 X 10 CAT, FLXPRT- 60" WIDTH	$ 2,200.00
4.1.45	TIRES, 10 X 16.5 10PR CAT, XD- 60" WIDTH	$ 760.00
4.1.46	TIRES, 10X16.5 8PR CAT- 60" WIDTH	$ 260.00
4.1.47	TIRES, 31 X 6 X 10 CAT, FLXPRT- 66" WIDTH	$ 2,200.00
4.1.48	TIRES, 10 X 16.5 10PR CAT, XD- 66" WIDTH	$ 760.00
4.1.49	TIRES, 10X16.5 10PR CAT- 66" WIDTH	$ 260.00
4.2	**Bucket Options:** Use this section to offer bucket options such as standard, snow or combination buckets, etc..	
4.2.1	BUCKET-GENERAL PURPOSE, BOLT ON CUTTING EDGE 62"	$ 1,130.00
4.2.2	BUCKET-GENERAL PURPOSE, BOLT ON CUTTING EDGE 68"	$ 1,230.00
4.2.3	BUCKET-GENERAL PURPOSE, BOLT ON CUTTING EDGE 74"	$ 1,360.00
4.2.4	BUCKET-GENERAL PURPOSE, BOLT ON CUTTING EDGE 80"	$ 1,440.00
4.2.5	BUCKET-GENERAL PURPOSE, BOLT ON CUTTING EDGE 86"	$ 1,540.00
4.2.6	BUCKET-LIGHT MATERIAL, BOLT ON CUTTING EDGE 74"	$ 1,390.00
4.2.7	BUCKET-LIGHT MATERIAL, BOLT ON CUTTING EDGE 80"	$ 1,490.00
4.2.8	BUCKET-LIGHT MATERIAL, BOLT ON CUTTING EDGE 86" (1.1 CU. YD.)	$ 1,600.00
4.2.9	BUCKET-LIGHT MATERIAL, BOLT ON CUTTING EDGE 86" (1.4 CU. YD.)	$ 1,780.00
4.2.10	BUCKET-LIGHT MATERIAL, BOLT ON CUTTING EDGE 98"	$ 1,800.00
4.2.11	BUCKET-LIGHT MATERIAL, BOLT ON CUTTING EDGE 104"	$ 1,870.00
4.2.12	BUCKET-LOW PROFILE, BOLT ON CUTTING EDGE 56"	$ 740.00
4.2.13	BUCKET-LOW PROFILE, BOLT ON CUTTING EDGE 62"	$ 850.00
4.2.14	BUCKET-LOW PROFILE, BOLT ON CUTTING EDGE 68"	$ 950.00
4.2.15	BUCKET-LOW PROFILE, BOLT ON CUTTING EDGE 74"	$ 1,050.00
4.2.16	BUCKET-LOW PROFILE, BOLT ON CUTTING EDGE 80"	$ 1,160.00
4.2.17	BUCKET-MULTI-PURPOSE, BOLT ON CUTTING EDGE W/SG, 62"	$ 3,030.00
4.2.18	BUCKET-MULTI-PURPOSE, BOLT ON TEETH W/SG 62"	$ 3,030.00
4.2.19	BUCKET-MULTI-PURPOSE, W/BO EDGE 68" W/SG	$ 3,290.00
4.2.20	BUCKET-MULTI-PURPOSE, BOLT ON TEETH 68" W/SG	$ 3,290.00
4.2.21	BUCKET-MULTI-PURPOSE, BOLT ON CUTTING EDGE 74" W/SG	$ 3,540.00
4.2.22	BUCKET-MULTI-PURPOSE, BOLT ON TEETH 74" W/SG	$ 3,540.00
4.2.23	BUCKET-MULTI-PURPOSE, BOLT ON CUTTING EDGE 80" W/SG	$ 3,800.00
4.2.24	BUCKET-MULTI-PURPOSE, BOLT ON TEETH 80" W/SG	$ 3,800.00
4.2.25	BUCKET-MULTI-PURPOSE, BOLT ON CUTTING EDGE 86" W/SG	$ 4,050.00
4.2.26	BUCKET-MULTI-PURPOSE, BOLT ON TEETH 86" W/SG	$ 4,050.00
4.2.27	BUCKET-TOOTH, BOLT ON TEETH 62"	$ 1,180.00
4.2.28	BUCKET-TOOTH, BOLT ON TEETH 68"	$ 1,270.00
4.2.29	BUCKET-TOOTH, BOLT ON TEETH 74"	$ 1,360.00
4.2.30	BUCKET-TOOTH, BOLT ON TEETH 80"	$ 1,470.00
4.2.31	BUCKET-TOOTH, BOLT ON TEETH 86"	$ 1,560.00
4.2.32	BUCKET-UTILITY, BOLT ON CUTTING EDGE 62"	$ 1,030.00
4.2.33	BUCKET-UTILITY, BOLT ON CUTTING EDGE 68"	$ 1,130.00
4.2.34	BUCKET-UTILITY, BOLT ON CUTTING EDGE 74"	$ 1,230.00

SKID / COMPACT TRACK LOADER
OPTIONS - FIXED PRICING
SPECIFICATION 4.0

Spec #	Description	Price
4.3	**Overtire tracks:**	
	Use this section to offer overtire tracks.	
4.4	**Forks:**	
	Use this section to offer fork options, such as pallet forks, bale handler, etc..	
4.4.1	FORKS, 48" PALLET W/ CARRIAGE	$ 710.00
4.4.2	FORKS, 66" INDUSTRIAL GRAPPLE	$ 4,640.00
4.4.3	FORKS, 72" INDUSTRIAL GRAPPLE	$ 5,540.00
4.5	**Adaptor Plate:**	
	Use this section to offer adaptor plate options.	
	Universal Adapter Plate	$ 220.00
4.6	**Snowblower:**	
	Use this section to offer snowblower options.	
4.6.1	SR115 SNOW BLOWER, 60" WORKING WIDTH, 20-23 GPM HYDRAULIC FLOW	$ 6,990.00
4.6.2	SR118 SNOW BLOWER, 72" WORKING WIDTH, 20-23 GPM HYDRAULIC FLOW	$ 7,100.00
4.6.3	SR121 SNOW BLOWER, 85" WORKING WIDTH, 20-23 GPM HYDRAULIC FLOW	$ 7,200.00
4.6.4	SR318 SNOW BLOWER, 72" WORKING WIDTH, 31-33 GPM HYDRAULIC FLOW	$ 7,470.00
4.6.5	SR321 SNOW BLOWER, 85" WORKING WIDTH, 31-33 GPM HYDRAULIC FLOW	$ 7,950.00
4.7	**Sweeper:**	
	Use this section to offer sweeper options.	
4.7.1	BA118C, MANUAL ANGLE, 83" WIDTH	$ 5,970.00
4.7.2	BA118C, HYDRAULIC ANGLE, 83" WIDTH	$ 7,120.00
4.7.3	BP115C, PICKUP BROOM	$ 5,530.00
4.7.4	BP118C, PICKUP BROOM	$ 5,940.00
4.7.5	BU115, UTILITY BROOM	$ 3,770.00
4.7.6	BU118, UTILITY BROOM	$ 4,100.00
4.8	**Backhoe:**	
	Use this section to offer backhoe options.	
4.8.1	BACKHOE, BH150 (INCLUDES D SERIES MOUNTING BRACKET AND 24" BUCKET).	$ 14,830.00
4.8.2	BACKHOE, BH160 W/ AUXILIARY (INCLUDES D SERIES MOUNTING BRACKET AND 24" BUCKET).	$ 15,280.00
4.9	**Planer:**	
	Use this section to offer planer options.	
4.9.1	COLD PLANER, PC104B, 14" WORKING WIDTH, 16-21 GPM REQUIRED HYDRAULIC FLOW	$ 10,000.00
4.9.2	COLD PLANER, PC205B, 18" WORKING WIDTH, 21-31 GPM REQUIRED HYDRAULIC FLOW	$ 12,550.00
4.9.3	COLD PLANER, PC305B, 18" WORKING WIDTH, 26-33 GPM REQUIRED HYDRAULIC FLOW	$ 15,400.00
4.9.4	COLD PLANER, PC306B, 24" WORKING WIDTH, 26-33 GPM REQUIRED HYDRAULIC FLOW	$ 16,510.00
4.9.5	COLD PLANER, PC408B, 30" WORKING WIDTH, 40 GPM REQUIRED HYDRAULIC FLOW	$ 19,490.00
4.9.6	COLD PLANER, PC310B, 39" WORKING WIDTH, 33 GPM REQUIRED HYDRAULIC FLOW	$ 23,010.00
4.9.7	COLD PLANER, PC412, 47" WORKING WIDTH, 40 GPM REQUIRED HYDRAULIC FLOW	$ 25,560.00
4.10	**Snow Plow:**	
	Use this section to offer snow plow options.	
4.10.1	SNOW PLOW, 72"	$ 3,580.00
4.10.2	SNOW PLOW, 84"	$ 3,780.00
4.10.3	SNOW PLOW, 96"	$ 3,980.00
4.10.4	SNOW PLOW, 108"	$ 4,240.00
4.10.5	SNOW PLOW, 120"	$ 4,780.00
4.10.6	SNOW PUSH, SSL, STD DTY 8'	$ 2,520.00
4.10.7	SNOW PUSH, SSL, STD DTY 10'	$ 2,970.00
4.10.8	SNOW PUSH, SSL, STD DTY 12'	$ 3,530.00
4.11	**Hydraulic breaker:**	
	Use this section to offer hydraulic breaker options.	
4.11.1	H55S HAMMER WITH SSL MOUNTS	$ 7,850.00
4.11.2	H65S HAMMER WITH SSL MOUNTS	$ 9,230.00
4.11.3	B4 HAMMER, NON-SILENCED WITH SSL MOUNTS	$ 4,390.00
4.11.4	B4S HAMMER, SILENCED WITH SSL MOUNTS	$ 4,880.00
4.11.5	B6S HAMMER, SILENCED WITH SSL MOUNTS	$ 7,100.00
4.11.6	B6S HAMMER, NON-SILENCED WITH SSL MOUNTS	$ 6,390.00
4.11.7	B8S HAMMER, SILENCED WITH SSL MOUNTS	$ 9,430.00
4.11.8	B8 HAMMER, NON-SILENCED WITH SSL MOUNTS	$ 8,490.00

SKID / COMPACT TRACK LOADER
OPTIONS - FIXED PRICING
SPECIFICATION 4.0

Spec #	Description	Price
4.12	**Grapple:**	
	Use this section to offer grapple options.	
4.12.1	BUCKET, UTILITY GRAPPLE 68"	$ 2,430.00
4.12.2	BUCKET, UTILITY GRAPPLE 74"	$ 2,530.00
4.12.3	BUCKET, INDUSTRIAL GRAPPLE 62"	$ 3,590.00
4.12.4	BUCKET, INDUSTRIAL GRAPPLE 68"	$ 3,760.00
4.12.5	BUCKET, INDUSTRIAL GRAPPLE 74"	$ 4,210.00
4.12.6	BUCKET, INDUSTRIAL GRAPPLE 80"	$ 4,640.00
4.12.7	GRAPPLE RAKE 72"	$ 3,140.00
4.12.8	GRAPPLE RAKE 84"	$ 3,510.00
4.13	**Landscape:**	
	Use this section to offer landscape options.	
4.13.1	BRUSHCUTTER, BR160, 60"	$ 4,700.00
4.13.2	BRUSHCUTTER, BR166, 66"	$ 4,910.00
4.13.3	BRUSHCUTTER, BR172, 72"	$ 5,130.00
4.13.4	BRUSHCUTTER, BR272, 72" HF	$ 5,350.00
4.13.5	BRUSHCUTTER, BR378, 78" HF,XPS	$ 6,440.00
4.13.6	BRUSHCUTTER, BRX118 72"	$ 11,850.00
4.13.7	BRUSHCUTTER, BRX318 72", HF, XPS	$ 12,170.00
4.13.8	BRUSHCUTTER, BRX418	$ 12,170.00
4.13.9	LANDSCAPE RAKE, LR15B	$ 5,910.00
4.13.10	LANDSCAPE RAKE, LR18B	$ 6,330.00
4.13.11	LANDSCAPE TILLER, LT13B	$ 4,180.00
4.13.12	LANDSCAPE TILLER, LT18B	$ 4,740.00
4.13.13	MULCHER, HM112C, 49", 16-18 GPM REQUIRED HYDRAULIC FLOW	$ 19,330.00
4.13.14	MULCHER, HM115C, 58", 20-23 GPM REQUIRED HYDRAULIC FLOW	$ 20,330.00
4.13.15	MULCHER, HM215C, 58", 25-31 GPM REQUIRED HYDRAULIC FLOW	$ 21,080.00
4.13.16	MULCHER, HM315C, 58", 31-33 GPM REQUIRED HYDRAULIC FLOW	$ 27,830.00
4.13.17	MULCHER, HM415C, 58.6", 36-41 GPM REQUIRED HYDRAULIC FLOW	$ 30,300.00
4.13.18	MULCHER, HM418C, 67.2", 40-41 GPM REQUIRED HYDRAULIC FLOW	$ 32,230.00
4.13.19	POWER BOX RAKE-HYDRAULIC,PR172	$ 8,620.00
4.13.20	POWER BOX RAKE-HYDRAULIC,PR184	$ 9,120.00
4.13.21	POWER BOX RAKE-HYDRAULIC,PR190	$ 9,830.00
4.13.22	POWER BOX RAKE-MANUAL, PR172	$ 7,910.00
4.13.23	POWER BOX RAKE-MANUAL, PR184	$ 8,190.00
4.13.24	STUMP GRINDER, SG16B	$ 6,370.00
4.13.25	STUMP GRINDER, SG18B	$ 7,370.00
4.13.26	TRENCHER, T6B, 36" BOOM LENGTH	$ 4,610.00
4.13.27	TRENCHER, T9B, 48" BOOM LENGTH	$ 4,880.00
4.13.28	TRENCHER, T15B 6", 60" BOOM LENGTH	$ 6,250.00
4.14	**Grader:**	
	Use this section to offer grader options.	
4.14.1	BB121, 84", GRADING BOX, INCLUDES TECHNOLOGY AND INSTALLATION.	$ 15,890.00
4.14.2	BB124, 96", GRADING BOX, INCLUDES TECHNOLOGY AND INSTALLATION.	$ 16,200.00
4.14.3	BLADE, DOZER, 6-WAY, 79"	$ 5,070.00
4.14.4	BLADE, DOZER, 6-WAY, 92"	$ 5,570.00
4.15	**Auger:**	
	Use this section to offer auger options.	
4.15.1	AUGER, A14B	$ 1,900.00
4.15.2	AUGER, A19B	$ 2,250.00
4.15.3	AUGER, A26B, HF	$ 3,620.00
4.15.4	BIT, AUGER 6"	$ 290.00
4.15.5	BIT, AUGER 9"	$ 380.00
4.15.6	BIT, AUGER 12"	$ 480.00
4.15.7	BIT, AUGER 15" STANDARD	$ 580.00
4.15.8	BIT, AUGER 18"	$ 670.00
4.15.9	BIT, AUGER 24"	$ 860.00
4.15.10	BIT, AUGER 30"	$ 1,050.00
4.15.11	BIT, AUGER 36"	$ 1,230.00
4.15.12	BIT, AUGER 6" INDUSTRIAL	$ 400.00
4.15.13	BIT, AUGER 9" INDUSTRIAL	$ 490.00
4.15.14	BIT, AUGER 12" INDUSTRIAL	$ 580.00
4.15.15	BIT, AUGER 16" INDUSTRIAL	$ 700.00
4.15.16	BIT, AUGER 18" INDUSTRIAL	$ 770.00
4.15.17	BIT, AUGER 24" INDUSTRIAL	$ 1,130.00
4.15.18	TREE BIT, AUGER 24"	$ 760.00
4.15.19	TREE BIT, AUGER 36"	$ 1,190.00
4.15.20	ADAPTER, AUGER - HEX TO ROUND	$ 140.00
4.15.21	ADAPTER, AUGER - ROUND TO HEX	$ 120.00
4.15.22	EXTENSION, TELESCOPING 3'	$ 280.00
4.15.23	EXTENSION, TELESCOPING 6'	$ 470.00
4.15.24	EXTENSION, AUGER 12"	$ 120.00
4.15.25	EXTENSION, AUGER 24"	$ 170.00

SKID / COMPACT TRACK LOADER
OPTIONS - FIXED PRICING
SPECIFICATION 4.0

Spec #	Description		Price
4.16	**Wheel saw:**		
	Use this section to offer wheel saw options.		
4.16.1	WHEEL SAW, SW345B, 3"	$	19,340.00
4.16.2	WHEEL SAW, SW360B, 3"	$	21,910.00
4.16.3	WHEEL SAW, SW360B, 6"	$	22,270.00
4.16.4	WHEEL SAW, SW360B, 8"	$	23,320.00
4.16.5	WHEEL SAW, SW460B, 3"	$	22,270.00
4.16.6	WHEEL SAW, SW460, 6"	$	22,940.00
4.16.7	WHEEL SAW, SW460, 8"	$	23,320.00
4.16.8	WHEEL SAW, SW380B, 10"	$	30,810.00
4.17	**Vibratory roller:**		
	Use this section to offer vibratory roller options.		
4.17.1	CV16B, VIBRATORY COMPACTOR	$	9,470.00
4.17.2	CV18B, VIBRATORY COMPACTOR	$	10,150.00
4.18	**Other:**		
	Use this section to offer any other option not already covered.		
4.18.1	S305, SSL SHEARS - 9.4" JAW OPENING	$	23,510.00
4.18.2	MATERIAL HANDLING ARM, 84", 2,000 LB. CAPACITY	$	1,320.00
4.18.3	MB200, MIXING BUCKET	$	5,510.00
4.18.4	MB250, MIXING BUCKET	$	5,770.00
4.19	**EXTENDED WARRANTY OPTIONS**		
	Use this section to offer performance/warranty options, number these items starting with 20.1, 20.2, 20.3, etc. **(Specify years, miles or hours extended term covers.)**		
4.19.1	3 Year / 3,000 Hour Powertrain Warranty	$	410.00
4.19.2	3 Year / 4,000 Hour Powertrain Warranty	$	520.00
4.19.3	3 Year / 5,000 Hour Powertrain Warranty	$	610.00
4.19.4	3 Year / 3,000 Hour Powertrain + Hydraulics + Technology Warranty	$	720.00
4.19.5	3 Year / 4,000 Hour Powertrain + Hydraulics + Technology Warranty	$	920.00
4.19.6	3 Year / 5,000 Hour Powertrain + Hydraulics + Technology Warranty	$	1,060.00
4.19.7	3 Year - 3,000 Hour Premier Warranty	$	1,150.00
4.19.8	3 Year - 4,000 Hour Premier Warranty	$	1,470.00
4.19.9	3 Year - 5,000 Hour Premier Warranty	$	1,700.00
4.19.10	4 Year / 3,000 Hour Powertrain Warranty	$	480.00
4.19.11	4 Year / 4,000 Hour Powertrain Warranty	$	870.00
4.19.12	4 Year / 5,000 Hour Powertrain Warranty	$	980.00
4.19.13	4 Year / 3,000 Hour Powertrain + Hydraulics + Technology Warranty	$	830.00
4.19.14	4 Year / 4,000 Hour Powertrain + Hydraulics + Technology Warranty	$	1,520.00
4.19.15	4 Year / 5,000 Hour Powertrain + Hydraulics + Technology Warranty	$	1,730.00
4.19.16	4 Year - 3,000 Hour Premier Warranty	$	1,340.00
4.19.17	4 Year - 4,000 Hour Premier Warranty	$	2,450.00
4.19.18	4 Year - 5,000 Hour Premier Warranty	$	2,770.00
4.19.19	5 Year / 3,000 Hour Powertrain Warranty	$	540.00
4.19.20	5 Year / 4,000 Hour Powertrain Warranty	$	980.00
4.19.21	5 Year / 5,000 Hour Powertrain Warranty	$	1,530.00
4.19.22	5 Year / 3,000 Hour Powertrain + Hydraulics + Technology Warranty	$	960.00
4.19.23	5 Year / 4,000 Hour Powertrain + Hydraulics + Technology Warranty	$	1,730.00
4.19.24	5Year / 5,000 Hour Powertrain + Hydraulics + Technology Warranty	$	2,690.00
4.19.25	5 Year - 3,000 Hour Premier Warranty	$	1,530.00
4.19.26	5 Year - 4,000 Hour Premier Warranty	$	2,770.00
4.19.27	5 Year - 5,000 Hour Premier Warranty	$	4,310.00
4.19.28	6 Year / 3,000 Hour Powertrain Warranty	$	630.00
4.19.29	6 Year / 4,000 Hour Powertrain Warranty	$	1,120.00
4.19.30	6 Year / 5,000 Hour Powertrain Warranty	$	1,720.00
4.19.31	6 Year / 3,000 Hour Powertrain + Hydraulics + Technology Warranty	$	1,090.00
4.19.32	6 Year / 4,000 Hour Powertrain + Hydraulics + Technology Warranty	$	1,950.00
4.19.33	6Year / 5,000 Hour Powertrain + Hydraulics + Technology Warranty	$	3,010.00
4.19.34	6 Year - 3,000 Hour Premier Warranty	$	1,750.00
4.19.35	6 Year - 4,000 Hour Premier Warranty	$	3,120.00
4.19.36	6 Year - 5,000 Hour Premier Warranty	$	4,810.00
4.19.37	7 Year / 3,000 Hour Powertrain Warranty	$	720.00
4.19.38	7 Year / 4,000 Hour Powertrain Warranty	$	1,250.00
4.19.39	7 Year / 5,000 Hour Powertrain Warranty	$	1,920.00
4.19.40	7 Year / 3,000 Hour Powertrain + Hydraulics + Technology Warranty	$	1,250.00
4.19.41	7 Year / 4,000 Hour Powertrain + Hydraulics + Technology Warranty	$	2,190.00
4.19.42	7Year / 5,000 Hour Powertrain + Hydraulics + Technology Warranty	$	3,360.00
4.19.43	7 Year - 3,000 Hour Premier Warranty	$	2,000.00
4.19.44	7 Year - 4,000 Hour Premier Warranty	$	3,500.00
4.19.45	7 Year - 5,000 Hour Premier Warranty	$	5,370.00
4.19.46	*does not include travel charges		
4.19.47	*see attached warranty statement		

SKID / COMPACT TRACK LOADER
OPTIONS - FIXED PRICING
SPECIFICATION 4.0

Spec #	Description	Price
4.20	**NEW EQUIPMENT RENTAL PROGRAM** If rental programs are available on the new equipment offered, with the option to purchase, list the hourly/weekly/monthly rental rate. Indicate the percent of rental fee paid by the purchaser that will be applied to the purchase price. See Solicitation Special Terms & Conditions.	
	Hourly Rental Rate:	$20.00
	Weekly Rental Rate:	$330.00
	Monthly Rental Rate:	$990.00
	Percent (%) of Rental Fee applied to purchase price:	100%
	If the new rental equipment is purchased and finance Charges are applicable for the actual rental term only. State the actual interest rate here: _____Prime + 3%_____	
4.21	**VENDOR OWNED RENTAL RETURN OR DEMO EQUIPMENT PROGRAM** (See Solicitation Special Terms and Conditions.)	
	DEDUCT cost per Used Hour from the original Contract Price	$9.00
4.22	**DELIVERY STARTING POINT - City, State, Zip**	Nearest Ziegler Location
	(See Special Terms and Conditions - no flat rate allowed.) **Price Per Loaded Mile:**	$3.00
4.23	**INSTALLATION - PER HOUR (Hourly Shop Rate):** Installation services may be requested on an "as needed" basis - see special terms and conditions.)	$138.00
4.24	**PRICE FOR ADDITIONAL MANUALS** (1 of each included at no cost, per specs)	
	ADDITIONAL SERVICE MANUAL	
	Digital	$ 50.00
	Paper	$ 950.00
	ADDITIONAL PARTS MANUAL	
	Digital	$ 50.00
	Paper	$ 50.00
	PRICE FOR ADDITIONAL OPERATIONS MANUAL	
	Digital	$ 50.00
	Paper	$ 50.00
4.25	**DISCOUNT OFF LIST PRICE FOR RELATED PARTS & ACCESSORIES** (See Special Terms and Conditions)	%

T-631
Tractors: Skid Steers Attachments
 # 727-1019

Skid Steer / Compact Track Loaders

FIXED PRICING
(BASE UNIT INFORMATION)
Specification 3.0

October, 2019

Vendor Name:	**Ziegler Inc.**
Contact Person:	**Cory Dalbec, Chris Rice**
Street Address:	**901 West 94th Street**
P.O. Box:	
City, State, Zip	**Bloomington, MN 55420**
Phone #:	**952.888.4121**
Toll Free #:	**800.352.2812**
Email Address:	**cory.dalbec@zieglercat.com, chris.rice@zieglercat.com**
Website:	www.zieglercat.com

Spec #	Information Requested	Answer
3.1	**MAKE AND MODEL**	Caterpillar 239D3
	Engine Type and SAE net HP	Cat C2.2 CRDI 65.8 HP
	Tier	Tier 4 Final
	Length w/o attachments	99.3 in
	Height with operator cab	80.1 in
	Ground clearance	7.7 in
	Maximum height to bucket hinge pin	111.2 in
	Breakout force	3,913 lbs.
	Reach at maximum height	22.2 in
	Dump angle at maximum height	50.3 degrees
	Dump height with standard bucket	81.0 in.
	Front clearance circle with standard bucket	81.5 in
	Rear clearance circle	57.4 in
	Tipping load - SAE rated	4,370 lbs
	Rated operating capacity - SAE	2,400 lbs
	Standard bucket capacity - SAE heaped rating	.57 cu yd
	Operating weight - SAE rated	7,434 lbs
	Travel speed	1 speed - 5.0 mph/2 speed- 7.6 mph
	Fuel tank capacity	15.1 gallons
	Cold weather starting assist	Glow Plugs
	Battery CCA	850
	Alternator size - amps	80
	Transmission type	Hydrostatic Transmission
	Tire / Track size / width	TRACK, RUBBER, 15.7 IN (400MM) BAR TREAD
	Final drive chains and drive method	Direct sprocket to track drive
	Final drive chain adjustment / maintenance	Not required
	Gauges / instrumentation	Gauges: fuel level, hour meter Instrumentation: Engine coolant temperature, engine oil pressure, hydraulic oil temperature
	Pump type - GPM and PSI	Piston/18.0 GPM/3336 PSI
	Control valves	Hydraulic 3 section
	Hydraulic oil cooler	Included - air to oil
	Drive controls	Electro/Hydraulic - hand controls
	Lift and tilt controls	Electro/Hydraulic - hand controls
	Engine speed control	Both foot and hand control
	Work lights - front	Included 2 each
	Work lights - rear	Included 2 each
	Warranty	2 years / unlimited hours full machine
	BASE UNIT PRICE:	$ 46,090.00

SKID / COMPACT TRACK LOADER
OPTIONS - FIXED PRICING
SPECIFICATION 4.0

Spec #	Description	Price
	Price for base unit:	$ 46,090.00
4.1	**Skid/Compact Track Loader Options:** Use this section to offer additional skid/track loader options such as hand controls, gauges, heater, enclosed cab etc.. These options should be for skid steer power unit and not attachments.	
4.1.1	PRESSURIZED CAB, HEATER/DEFROSTER & DOOR	$ (1,430.00)
4.1.2	PRESSURIZED CAB, HEATER/DEFROSTER, AIR CONDITIONING & DOOR	INCLUDED
4.1.3	OPEN ROPS	$ (3,110.00)
4.1.4	AIR SUSPENSION SEAT-VINYL	$ (20.00)
4.1.5	AIR SUSPENSION SEAT-CLOTH	INCLUDED
4.1.6	PROPORTIONAL WORK TOOL CONTROL	INCLUDED
4.1.7	DUAL/SINGLE IDLER	INCLUDED
4.1.8	12.6" BLOCK RUBBER TRACKS	INCLUDED
4.1.9	15.7" BAR RUBBER TRACKS	$ 360.00
4.1.10	HAND & FOOT CONTROLS	$ 290.00
4.1.11	TWO SPEED CONTROL	INCLUDED
4.1.12	HYDRAULIC COUPLER	INCLUDED
4.1.13	FAN, COOLING, DEMAND	INCLUDED
4.1.14	FAN, COOLING, DEMAND, REVERSING	$ 590.00
4.1.15	RIDE CONTROL	$ 730.00
4.1.16	HIGH FLOW HYDRAULICS	$ 1,800.00
4.1.17	DOOR, CAB, POLYCARBONATE	$ 150.00
4.1.18	DOOR, CAB, GLASS	
4.1.19	RADIO AM-FM, CD, BLUETOOTH	INCLUDED
4.1.20	ADVANCED DISPLAY WITH BACKUP CAMERA	INCLUDED
4.1.21	PROPORTIONAL HYDRAULICS	$ (280.00)
4.1.22	DUAL SELF-LEVELING	INCLUDED
4.1.23	HEAVY DUTY BATTERY W/DISCONNECT	$ 90.00
4.1.24	LIGHTS LED	INCLUDED
4.1.25	HALOGEN LIGHTS	$ (200.00)
4.1.26	BEACON LIGHT	$ 160.00
4.1.27	REAR LIGHTS	$ -
4.1.28	REAR LIGHTS, STOP/TAIL/TURN	$ 550.00
4.1.29	ROADING LIGHTS	$ 690.00
4.1.30	SEAT BELT, 2"	INCLUDED
4.1.31	SEAT BELT, 3"	$ 200.00
4.1.32	RETURN TO DIG/ WORKTOOL POSITIONER	INCLUDED
4.1.33	COUNTERWEIGHT, MACHINE EXTERNAL	$ 720.00
4.1.34	MOUNTING, FIRE EXTINGUISHER	$ 290.00
4.1.35	SINGLE EYE LIFTING POINT	$ 1,200.00
4.1.36	LIFTING EYE 4 POINT	$ 140.00
4.1.37	FOPS, LEVEL 2	$ 2,700.00
4.1.38	HEATER, ENGINE COOLANT, 120V	$ 140.00
4.1.39	PRODUCT LINK, CELLULAR, PL243	INCLUDED
4.1.40	PRODUCT LINK, CELLULAR, PL641	$ 330.00
4.1.41	OIL, HYDRAULIC, COLD OPERATION	$ 470.00
4.1.42	PATTERN CHANGER	$ 750.00
4.1.43	CASE DEDICATED CONTROLS	$ 100.00
4.1.44	PAINT, CUSTOM	$ 1,460.00
4.1.45	CORRISION INHIBITOR - EquipCoat Spray / Clear Coat	$ 2,500.00
4.2	**Bucket Options:** Use this section to offer bucket options such as standard, snow or combination buckets, etc..	
4.2.1	BUCKET-GENERAL PURPOSE, BOLT ON CUTTING EDGE 62"	$ 1,130.00
4.2.2	BUCKET-GENERAL PURPOSE, BOLT ON CUTTING EDGE 68"	$ 1,230.00
4.2.3	BUCKET-GENERAL PURPOSE, BOLT ON CUTTING EDGE 74"	$ 1,360.00
4.2.4	BUCKET-GENERAL PURPOSE, BOLT ON CUTTING EDGE 80"	$ 1,440.00
4.2.5	BUCKET-GENERAL PURPOSE, BOLT ON CUTTING EDGE 86"	$ 1,540.00
4.2.6	BUCKET-LIGHT MATERIAL, BOLT ON CUTTING EDGE 74"	$ 1,390.00
4.2.7	BUCKET-LIGHT MATERIAL, BOLT ON CUTTING EDGE 80"	$ 1,490.00
4.2.8	BUCKET-LIGHT MATERIAL, BOLT ON CUTTING EDGE 86" (1.1 CU. YD.)	$ 1,600.00
4.2.9	BUCKET-LIGHT MATERIAL, BOLT ON CUTTING EDGE 86" (1.4 CU. YD.)	$ 1,780.00
4.2.10	BUCKET-LIGHT MATERIAL, BOLT ON CUTTING EDGE 98"	$ 1,800.00
4.2.11	BUCKET-LIGHT MATERIAL, BOLT ON CUTTING EDGE 104"	$ 1,870.00
4.2.12	BUCKET-LOW PROFILE, BOLT ON CUTTING EDGE 56"	$ 740.00
4.2.13	BUCKET-LOW PROFILE, BOLT ON CUTTING EDGE 62"	$ 850.00
4.2.14	BUCKET-LOW PROFILE, BOLT ON CUTTING EDGE 68"	$ 950.00
4.2.15	BUCKET-LOW PROFILE, BOLT ON CUTTING EDGE 74"	$ 1,050.00
4.2.16	BUCKET-LOW PROFILE, BOLT ON CUTTING EDGE 80"	$ 1,160.00
4.2.17	BUCKET-MULTI-PURPOSE, BOLT ON CUTTING EDGE W/SG, 62"	$ 3,030.00
4.2.18	BUCKET-MULTI-PURPOSE, BOLT ON TEETH W/SG 62"	$ 3,030.00
4.2.19	BUCKET-MULTI-PURPOSE, W/BO EDGE 68" W/SG	$ 3,290.00
4.2.20	BUCKET-MULTI-PURPOSE, BOLT ON TEETH 68" W/SG	$ 3,290.00
4.2.21	BUCKET-MULTI-PURPOSE, BOLT ON CUTTING EDGE 74" W/SG	$ 3,540.00
4.2.22	BUCKET-MULTI-PURPOSE, BOLT ON TEETH 74" W/SG	$ 3,540.00
4.2.23	BUCKET-MULTI-PURPOSE, BOLT ON CUTTING EDGE 80" W/SG	$ 3,800.00
4.2.24	BUCKET-MULTI-PURPOSE, BOLT ON TEETH 80" W/SG	$ 3,800.00
4.2.25	BUCKET-MULTI-PURPOSE, BOLT ON CUTTING EDGE 86" W/SG	$ 4,050.00
4.2.26	BUCKET-MULTI-PURPOSE, BOLT ON TEETH 86" W/SG	$ 4,050.00
4.2.27	BUCKET-TOOTH, BOLT ON TEETH 62"	$ 1,180.00
4.2.28	BUCKET-TOOTH, BOLT ON TEETH 68"	$ 1,270.00
4.2.29	BUCKET-TOOTH, BOLT ON TEETH 74"	$ 1,360.00
4.2.30	BUCKET-TOOTH, BOLT ON TEETH 80"	$ 1,470.00
4.2.31	BUCKET-TOOTH, BOLT ON TEETH 86"	$ 1,560.00
4.2.32	BUCKET-UTILITY, BOLT ON CUTTING EDGE 62"	$ 1,030.00
4.2.33	BUCKET-UTILITY, BOLT ON CUTTING EDGE 68"	$ 1,130.00
4.2.34	BUCKET-UTILITY, BOLT ON CUTTING EDGE 74"	$ 1,230.00

SKID / COMPACT TRACK LOADER
OPTIONS - FIXED PRICING
SPECIFICATION 4.0

Spec #	Description	Price
4.3	**Overtire tracks:**	
	Use this section to offer overtire tracks.	
4.4	**Forks:**	
	Use this section to offer fork options, such as pallet forks, bale handler, etc..	
4.4.1	FORKS, 48" PALLET W/ CARRIAGE	$ 710.00
4.4.2	FORKS, 66" INDUSTRIAL GRAPPLE	$ 4,640.00
4.4.3	FORKS, 72" INDUSTRIAL GRAPPLE	$ 5,540.00
4.5	**Adaptor Plate:**	
	Use this section to offer adaptor plate options.	
	Universal Adapter Plate	$ 220.00
4.6	**Snowblower:**	
	Use this section to offer snowblower options.	
4.6.1	SR115 SNOW BLOWER, 60" WORKING WIDTH, 20-23 GPM HYDRAULIC FLOW	$ 6,990.00
4.6.2	SR118 SNOW BLOWER, 72" WORKING WIDTH, 20-23 GPM HYDRAULIC FLOW	$ 7,100.00
4.6.3	SR121 SNOW BLOWER, 85" WORKING WIDTH, 20-23 GPM HYDRAULIC FLOW	$ 7,200.00
4.6.4	SR318 SNOW BLOWER, 72" WORKING WIDTH, 31-33 GPM HYDRAULIC FLOW	$ 7,470.00
4.6.5	SR321 SNOW BLOWER, 85" WORKING WIDTH, 31-33 GPM HYDRAULIC FLOW	$ 7,950.00
4.7	**Sweeper:**	
	Use this section to offer sweeper options.	
4.7.1	BA118C, MANUAL ANGLE, 83" WIDTH	$ 5,970.00
4.7.2	BA118C, HYDRAULIC ANGLE, 83" WIDTH	$ 7,120.00
4.7.3	BP115C, PICKUP BROOM	$ 5,530.00
4.7.4	BP118C, PICKUP BROOM	$ 5,940.00
4.7.5	BU115, UTILITY BROOM	$ 3,770.00
4.7.6	BU118, UTILITY BROOM	$ 4,100.00
4.8	**Backhoe:**	
	Use this section to offer backhoe options.	
4.8.1	BACKHOE, BH150 (INCLUDES D SERIES MOUNTING BRACKET AND 24" BUCKET).	$ 14,830.00
4.8.2	BACKHOE, BH160 W/ AUXILIARY (INCLUDES D SERIES MOUNTING BRACKET AND 24" BUCKET).	$ 15,280.00
4.9	**Planer:**	
	Use this section to offer planer options.	
4.9.1	COLD PLANER, PC104B, 14" WORKING WIDTH, 16-21 GPM REQUIRED HYDRAULIC FLOW	$ 10,000.00
4.9.2	COLD PLANER, PC205B, 18" WORKING WIDTH, 21-31 GPM REQUIRED HYDRAULIC FLOW	$ 12,550.00
4.9.3	COLD PLANER, PC305B, 18" WORKING WIDTH, 26-33 GPM REQUIRED HYDRAULIC FLOW	$ 15,400.00
4.9.4	COLD PLANER, PC306B, 24" WORKING WIDTH, 26-33 GPM REQUIRED HYDRAULIC FLOW	$ 16,510.00
4.9.5	COLD PLANER, PC408B, 30" WORKING WIDTH, 40 GPM REQUIRED HYDRAULIC FLOW	$ 19,490.00
4.9.6	COLD PLANER, PC310B, 39" WORKING WIDTH, 33 GPM REQUIRED HYDRAULIC FLOW	$ 23,010.00
4.9.7	COLD PLANER, PC412, 47" WORKING WIDTH, 40 GPM REQUIRED HYDRAULIC FLOW	$ 25,560.00
4.10	**Snow Plow:**	
	Use this section to offer snow plow options.	
4.10.1	SNOW PLOW, 72"	$ 3,580.00
4.10.2	SNOW PLOW, 84"	$ 3,780.00
4.10.3	SNOW PLOW, 96"	$ 3,980.00
4.10.4	SNOW PLOW, 108"	$ 4,240.00
4.10.5	SNOW PLOW, 120"	$ 4,780.00
4.10.6	SNOW PUSH, SSL, STD DTY 8'	$ 2,520.00
4.10.7	SNOW PUSH, SSL, STD DTY 10'	$ 2,970.00
4.10.8	SNOW PUSH, SSL, STD DTY 12'	$ 3,530.00
4.11	**Hydraulic breaker:**	
	Use this section to offer hydraulic breaker options.	
4.11.1	H55S HAMMER WITH SSL MOUNTS	$ 7,850.00
4.11.2	H65S HAMMER WITH SSL MOUNTS	$ 9,230.00
4.11.3	B4 HAMMER, NON-SILENCED WITH SSL MOUNTS	$ 4,390.00
4.11.4	B4S HAMMER, SILENCED WITH SSL MOUNTS	$ 4,880.00
4.11.5	B6S HAMMER, SILENCED WITH SSL MOUNTS	$ 7,100.00
4.11.6	B6S HAMMER, NON-SILENCED WITH SSL MOUNTS	$ 6,390.00
4.11.7	B8S HAMMER, SILENCED WITH SSL MOUNTS	$ 9,430.00
4.11.8	B8 HAMMER, NON-SILENCED WITH SSL MOUNTS	$ 8,490.00
4.12	**Grapple:**	
	Use this section to offer grapple options.	
4.12.1	BUCKET, UTILITY GRAPPLE 68"	$ 2,430.00
4.12.2	BUCKET, UTILITY GRAPPLE 74"	$ 2,530.00
4.12.3	BUCKET, INDUSTRIAL GRAPPLE 62"	$ 3,590.00
4.12.4	BUCKET, INDUSTRIAL GRAPPLE 68"	$ 3,760.00
4.12.5	BUCKET, INDUSTRIAL GRAPPLE 74"	$ 4,210.00
4.12.6	BUCKET, INDUSTRIAL GRAPPLE 80"	$ 4,640.00
4.12.7	GRAPPLE RAKE 72"	$ 3,140.00
4.12.8	GRAPPLE RAKE 84"	$ 3,510.00
4.13	**Landscape:**	
	Use this section to offer landscape options.	
4.13.1	BRUSHCUTTER, BR160, 60"	$ 4,700.00
4.13.2	BRUSHCUTTER, BR166, 66"	$ 4,910.00
4.13.3	BRUSHCUTTER, BR172, 72"	$ 5,130.00
4.13.4	BRUSHCUTTER, BR272, 72" HF	$ 5,350.00
4.13.5	BRUSHCUTTER, BR378, 78" HF,XPS	$ 6,440.00
4.13.6	BRUSHCUTTER, BRX118 72"	$ 11,850.00
4.13.7	BRUSHCUTTER, BRX318 72", HF, XPS	$ 12,170.00
4.13.8	BRUSHCUTTER, BRX418	$ 12,170.00
4.13.9	LANDSCAPE RAKE, LR15B	$ 5,910.00
4.13.10	LANDSCAPE RAKE, LR18B	$ 6,330.00
4.13.11	LANDSCAPE TILLER, LT13B	$ 4,180.00
4.13.12	LANDSCAPE TILLER, LT18B	$ 4,740.00
4.13.13	MULCHER, HM112C, 49", 16-18 GPM REQUIRED HYDRAULIC FLOW	$ 19,330.00
4.13.14	MULCHER, HM115C, 58", 20-23 GPM REQUIRED HYDRAULIC FLOW	$ 20,330.00
4.13.15	MULCHER, HM215C, 58", 25-31 GPM REQUIRED HYDRAULIC FLOW	$ 21,080.00
4.13.16	MULCHER, HM315C, 58", 31-33 GPM REQUIRED HYDRAULIC FLOW	$ 27,830.00
4.13.17	MULCHER, HM415C, 58.6", 36-41 GPM REQUIRED HYDRAULIC FLOW	$ 30,300.00
4.13.18	MULCHER, HM418C, 67.2", 40-41 GPM REQUIRED HYDRAULIC FLOW	$ 32,230.00
4.13.19	POWER BOX RAKE-HYDRAULIC,PR172	$ 8,620.00
4.13.20	POWER BOX RAKE-HYDRAULIC,PR184	$ 9,120.00
4.13.21	POWER BOX RAKE-HYDRAULIC,PR190	$ 9,830.00
4.13.22	POWER BOX RAKE-MANUAL, PR172	$ 7,910.00
4.13.23	POWER BOX RAKE-MANUAL, PR184	$ 8,190.00
4.13.24	STUMP GRINDER, SG16B	$ 6,370.00
4.13.25	STUMP GRINDER, SG18B	$ 7,370.00
4.13.26	TRENCHER, T6B, 36" BOOM LENGTH	$ 4,610.00
4.13.27	TRENCHER, T9B, 48" BOOM LENGTH	$ 4,880.00
4.13.28	TRENCHER, T15B 6", 60" BOOM LENGTH	$ 6,250.00

SKID / COMPACT TRACK LOADER
OPTIONS - FIXED PRICING
SPECIFICATION 4.0

Spec #	Description	Price
4.14	**Grader:**	
	Use this section to offer grader options.	
4.14.1	BB121, 84", GRADING BOX, INCLUDES TECHNOLOGY AND INSTALLATION.	$ 15,890.00
4.14.2	BB124, 96", GRADING BOX, INCLUDES TECHNOLOGY AND INSTALLATION.	$ 16,200.00
4.14.3	BLADE, DOZER, 6-WAY, 79"	$ 5,070.00
4.14.4	BLADE, DOZER, 6-WAY, 92"	$ 5,570.00
4.15	**Auger:**	
	Use this section to offer auger options.	
4.15.1	AUGER, A14B	$ 1,900.00
4.15.2	AUGER, A19B	$ 2,250.00
4.15.3	AUGER, A26B, HF	$ 3,620.00
4.15.4	BIT, AUGER 6"	$ 290.00
4.15.5	BIT, AUGER 9"	$ 380.00
4.15.6	BIT, AUGER 12"	$ 480.00
4.15.7	BIT, AUGER 15" STANDARD	$ 580.00
4.15.8	BIT, AUGER 18"	$ 670.00
4.15.9	BIT, AUGER 24"	$ 860.00
4.15.10	BIT, AUGER 30"	$ 1,050.00
4.15.11	BIT, AUGER 36"	$ 1,230.00
4.15.12	BIT, AUGER 6" INDUSTRIAL	$ 400.00
4.15.13	BIT, AUGER 9" INDUSTRIAL	$ 490.00
4.15.14	BIT, AUGER 12" INDUSTRIAL	$ 580.00
4.15.15	BIT, AUGER 16" INDUSTRIAL	$ 700.00
4.15.16	BIT, AUGER 18" INDUSTRIAL	$ 770.00
4.15.17	BIT, AUGER 24" INDUSTRIAL	$ 1,130.00
4.15.18	TREE BIT, AUGER 24"	$ 760.00
4.15.19	TREE BIT, AUGER 36"	$ 1,190.00
4.15.20	ADAPTER, AUGER - HEX TO ROUND	$ 140.00
4.15.21	ADAPTER, AUGER - ROUND TO HEX	$ 120.00
4.15.22	EXTENSION, TELESCOPING 3'	$ 280.00
4.15.23	EXTENSION, TELESCOPING 6'	$ 470.00
4.15.24	EXTENSION, AUGER 12"	$ 120.00
4.15.25	EXTENSION, AUGER 24"	$ 170.00
4.16	**Wheel saw:**	
	Use this section to offer wheel saw options.	
4.16.1	WHEEL SAW, SW345B, 3"	$ 19,340.00
4.16.2	WHEEL SAW, SW360B, 3"	$ 21,910.00
4.16.3	WHEEL SAW, SW360B, 6"	$ 22,270.00
4.16.4	WHEEL SAW, SW360B, 8"	$ 23,320.00
4.16.5	WHEEL SAW, SW460B, 3"	$ 22,270.00
4.16.6	WHEEL SAW, SW460, 6"	$ 22,940.00
4.16.7	WHEEL SAW, SW460, 8"	$ 23,320.00
4.16.8	WHEEL SAW, SW380B, 10"	$ 30,810.00
4.17	**Vibratory roller:**	
	Use this section to offer vibratory roller options.	
4.17.1	CV16B, VIBRATORY COMPACTOR	$ 9,470.00
4.17.2	CV18B, VIBRATORY COMPACTOR	$ 10,150.00
4.18	**Other:**	
	Use this section to offer any other option not already covered.	
4.18.1	S305, SSL SHEARS - 9.4" JAW OPENING	$ 23,510.00
4.18.2	MATERIAL HANDLING ARM, 84", 2,000 LB. CAPACITY	$ 1,320.00
4.18.3	MB200, MIXING BUCKET	$ 5,510.00
4.18.4	MB250, MIXING BUCKET	$ 5,770.00

SKID / COMPACT TRACK LOADER
OPTIONS - FIXED PRICING
SPECIFICATION 4.0

Spec #	Description	Price
4.19	**EXTENDED WARRANTY OPTIONS**	
	Use this section to offer performance/warranty options, number these items starting with 20.1, 20.2, 20.3, etc. **(Specify years, miles or hours extended term covers.)**	
4.19.1	3 Year / 3,000 Hour Powertrain Warranty	$ 700.00
4.19.2	3 Year / 4,000 Hour Powertrain Warranty	$ 810.00
4.19.3	3 Year / 5,000 Hour Powertrain Warranty	$ 940.00
4.19.4	3 Year / 3,000 Hour Powertrain + Hydraulics + Technology Warranty	$ 1,230.00
4.19.5	3 Year / 4,000 Hour Powertrain + Hydraulics + Technology Warranty	$ 1,420.00
4.19.6	3 Year / 5,000 Hour Powertrain + Hydraulics + Technology Warranty	$ 1,640.00
4.19.7	3 Year - 3,000 Hour Premier Warranty	$ 2,370.00
4.19.8	3 Year - 4,000 Hour Premier Warranty	$ 2,750.00
4.19.9	3 Year - 5,000 Hour Premier Warranty	$ 3,180.00
4.19.10	4 Year / 3,000 Hour Powertrain Warranty	$ 810.00
4.19.11	4 Year / 4,000 Hour Powertrain Warranty	$ 1,350.00
4.19.12	4 Year / 5,000 Hour Powertrain Warranty	$ 1,520.00
4.19.13	4 Year / 3,000 Hour Powertrain + Hydraulics + Technology Warranty	$ 1,420.00
4.19.14	4 Year / 4,000 Hour Powertrain + Hydraulics + Technology Warranty	$ 2,370.00
4.19.15	4 Year / 5,000 Hour Powertrain + Hydraulics + Technology Warranty	$ 2,690.00
4.19.16	4 Year - 3,000 Hour Premier Warranty	$ 2,740.00
4.19.17	4 Year - 4,000 Hour Premier Warranty	$ 4,580.00
4.19.18	4 Year - 5,000 Hour Premier Warranty	$ 5,200.00
4.19.19	5 Year / 3,000 Hour Powertrain Warranty	$ 930.00
4.19.20	5 Year / 4,000 Hour Powertrain Warranty	$ 1,520.00
4.19.21	5 Year / 5,000 Hour Powertrain Warranty	$ 2,370.00
4.19.22	5 Year / 3,000 Hour Powertrain + Hydraulics + Technology Warranty	$ 1,630.00
4.19.23	5 Year / 4,000 Hour Powertrain + Hydraulics + Technology Warranty	$ 2,680.00
4.19.24	5Year / 5,000 Hour Powertrain + Hydraulics + Technology Warranty	$ 4,180.00
4.19.25	5 Year - 3,000 Hour Premier Warranty	$ 3,160.00
4.19.26	5 Year - 4,000 Hour Premier Warranty	$ 5,190.00
4.19.27	5 Year - 5,000 Hour Premier Warranty	$ 8,090.00
4.19.46	*does not include travel charges	
4.19.47	*see attached warranty statement	

4.20 NEW EQUIPMENT RENTAL PROGRAM

If rental programs are available on the new equipment offered, with the option to purchase, list the hourly/weekly/monthly rental rate. Indicate the percent of rental fee paid by the purchaser that will be applied to the purchase price. See Solicitation Special Terms & Conditions.

Hourly Rental Rate:	$20.00
Weekly Rental Rate:	$330.00
Monthly Rental Rate:	$990.00
Percent (%) of Rental Fee applied to purchase price:	100%

If the new rental equipment is purchased and finance
Charges are applicable for the actual rental term only.
State the actual interest rate here: _____Prime + 3%_____

4.21 VENDOR OWNED RENTAL RETURN OR DEMO EQUIPMENT PROGRAM

(See Solicitation Special Terms and Conditions.)
DEDUCT cost per Used Hour from the original Contract Price: $9.00

4.22 DELIVERY STARTING POINT - City, State, Zip: Nearest Ziegler Location
(See Special Terms and Conditions - no flat rate allowed.) **Price Per Loaded Mile:** $3.00

4.23 INSTALLATION - PER HOUR (Hourly Shop Rate):
Installation services may be requested on an "as needed" basis - see special terms and conditions.) $138.00

4.24 PRICE FOR ADDITIONAL MANUALS (1 of each included at no cost, per specs)

ADDITIONAL SERVICE MANUAL		
	Digital	$ 50.00
	Paper	$ 950.00
ADDITIONAL PARTS MANUAL		
	Digital	$ 50.00
	Paper	$ 50.00
PRICE FOR ADDITIONAL OPERATIONS MANUAL		
	Digital	$ 50.00
	Paper	$ 50.00

4.25 DISCOUNT OFF LIST PRICE FOR RELATED PARTS & ACCESSORIES %
(See Special Terms and Conditions)

T-631
Tractors: Skid Steers Attachments
 # 727-1019

Skid Steer / Compact Track Loaders

FIXED PRICING
(BASE UNIT INFORMATION)
Specification 3.0

October, 2019

Vendor Name:	**Ziegler Inc.**
Contact Person:	**Cory Dalbec, Chris Rice**
Street Address:	**901 West 94th Street**
P.O. Box:	
City, State, Zip	**Bloomington, MN 55420**
Phone #:	**952.888.4121**
Toll Free #:	**800.352.2812**
Email Address:	**cory.dalbec@zieglercat.com, chris.rice@zieglercat.com**
Website:	www.zieglercat.com

Spec #	Information Requested	Answer
3.1	**MAKE AND MODEL**	Caterpillar 242D3
	Engine Type and SAE net HP	Cat 3.3B DIT (Turbo) 73.2 HP
	Tier	Tier 4 Final
	Length w/o attachments	108.9"
	Height with operator cab	83.1"
	Ground clearance	8.7"
	Maximum height to bucket hinge pin	121.1"
	Breakout force	4,963 lbs.
	Reach at maximum height	21.7"
	Dump angle at maximum height	52 degrees
	Dump height with standard bucket	90"
	Front clearance circle with standard bucket	83"
	Rear clearance circle	64.5"
	Tipping load - SAE rated	4,400 lbs.
	Rated operating capacity - SAE	2,200 lbs.
	Standard bucket capacity - SAE heaped rating	.57 cu yd
	Operating weight - SAE rated	7,138 lbs.
	Travel speed	1 speed -7.5 mph 2-speed 11.5 mph
	Fuel tank capacity	24.8 gallons
	Cold weather starting assist	Glow Plugs
	Battery CCA	850 CCA
	Alternator size - amps	80 amps
	Transmission type	Hydrostatic
	Tire / Track size / width	TIRES, 12/16.5 CAT 10PR
	Final drive chains and drive method	#100 pre-stressed chain Direct sprocket to chain drive
	Final drive chain adjustment / maintenance	500 Hours
	Gauges / instrumentation	Gauges: fuel level, hour meter Instrumentation: Engine coolant temperature, engine oil pressure, hydraulic oil temperature
	Pump type - GPM and PSI	Piston/20 GPM/3335 PSI
	Control valves	Hydraulic 3 section
	Hydraulic oil cooler	Included - air to oil
	Drive controls	Electro/Hydraulic - hand controls
	Lift and tilt controls	Electro/Hydraulic - hand controls
	Engine speed control	Both foot and hand control
	Work lights - front	Included 2 each
	Work lights - rear	Included 2 each
	Warranty	2 years / unlimited hours full machine
	BASE UNIT PRICE:	$ 41,520.00

SKID / COMPACT TRACK LOADER
OPTIONS - FIXED PRICING
SPECIFICATION 4.0

Spec #	Description	Price
	Price for base unit:	$ 41,520.00
4.1	**Skid/Compact Track Loader Options:** Use this section to offer additional skid/track loader options such as hand controls, gauges, heater, enclosed cab etc.. These options should be for skid steer power unit and not attachments.	
4.1.1	PRESSURIZED CAB, HEATER/DEFROSTER & DOOR	$ (1,390.00)
4.1.2	PRESSURIZED CAB, HEATER/DEFROSTER, AIR CONDITIONING & DOOR	INCLUDED
4.1.3	OPEN ROPS	$ (3,020.00)
4.1.4	AIR SUSPENSION SEAT-VINYL	$ (10.00)
4.1.5	AIR SUSPENSION SEAT-CLOTH	INCLUDED
4.1.6	PROPORTIONAL WORK TOOL CONTROL	INCLUDED
4.1.7	HAND & FOOT CONTROLS	$ 290.00
4.1.8	TWO SPEED CONTROL	INCLUDED
4.1.9	HYDRAULIC COUPLER	INCLUDED
4.1.10	FAN, COOLING, DEMAND	INCLUDED
4.1.11	FAN, COOLING, DEMAND, REVERSING	$ 570.00
4.1.12	RIDE CONTROL	$ 710.00
4.1.13	HIGH FLOW HYDRAULICS	$ 2,080.00
4.1.14	DOOR, CAB, POLYCARBONATE	$ 150.00
4.1.15	DOOR, CAB, GLASS	INCLUDED
4.1.16	RADIO AM-FM, CD, BLUETOOTH	INCLUDED
4.1.17	ADVANCED DISPLAY WITH BACKUP CAMERA	INCLUDED
4.1.18	PROPORTIONAL HYDRAULICS	$ (280.00)
4.1.19	DUAL SELF-LEVELING	INCLUDED
4.1.20	HEAVY DUTY BATTERY W/DISCONNECT	$ 90.00
4.1.21	LIGHTS LED	INCLUDED
4.1.22	HALOGEN LIGHTS	$ (190.00)
4.1.23	BEACON LIGHT	$ 150.00
4.1.24	REAR LIGHTS	INCLUDED
4.1.25	REAR LIGHTS, STOP/TAIL/TURN	$ 540.00
4.1.26	ROADING LIGHTS	$ 680.00
4.1.27	SEAT BELT, 2"	INCLUDED
4.1.28	SEAT BELT, 3"	$ 200.00
4.1.29	RETURN TO DIG/ WORKTOOL POSITIONER	INCLUDED
4.1.30	COUNTERWEIGHT, MACHINE EXTERNAL	$ 700.00
4.1.31	MOUNTING, FIRE EXTINGUISHER	$ 290.00
4.1.32	SINGLE EYE LIFTING POINT	$ 1,200.00
4.1.33	LIFTING EYE 4 POINT	$ 130.00
4.1.34	FOPS, LEVEL 2	$ 2,700.00
4.1.35	HEATER, ENGINE COOLANT, 120V	$ 140.00
4.1.36	PRODUCT LINK, CELLULAR, PL243	INCLUDED
4.1.37	PRODUCT LINK, CELLULAR, PL641	$ 320.00
4.1.38	OIL, HYDRAULIC, COLD OPERATION	$ 450.00
4.1.39	PATTERN CHANGER	$ 750.00
4.1.40	CASE DEDICATED CONTROLS	$ 100.00
4.1.41	PAINT, CUSTOM	$ 1,460.00
4.1.42	CORRISION INHIBITOR - EquipCoat Spray / Clear Coat	$ 2,500.00
4.1.43	TIRES, 12/16.5 CAT 10PR	INCLUDED
4.1.44	TIRES, 31 X 6 X 10 CAT, FLXPRT- 60" WIDTH	$ 2,200.00
4.1.45	TIRES, 10 X 16.5 10PR CAT, XD- 60" WIDTH	$ 760.00
4.1.46	TIRES, 10X16.5 8PR CAT- 60" WIDTH	$ 260.00
4.1.47	TIRES, 31 X 6 X 10 CAT, FLXPRT- 66" WIDTH	$ 2,200.00
4.1.48	TIRES, 10 X 16.5 10PR CAT, XD- 66" WIDTH	$ 760.00
4.1.49	TIRES, 10X16.5 10PR CAT- 66" WIDTH	$ 260.00
4.2	**Bucket Options:** Use this section to offer bucket options such as standard, snow or combination buckets, etc..	
4.2.1	BUCKET-GENERAL PURPOSE, BOLT ON CUTTING EDGE 62"	$ 1,130.00
4.2.2	BUCKET-GENERAL PURPOSE, BOLT ON CUTTING EDGE 68"	$ 1,230.00
4.2.3	BUCKET-GENERAL PURPOSE, BOLT ON CUTTING EDGE 74"	$ 1,360.00
4.2.4	BUCKET-GENERAL PURPOSE, BOLT ON CUTTING EDGE 80"	$ 1,440.00
4.2.5	BUCKET-GENERAL PURPOSE, BOLT ON CUTTING EDGE 86"	$ 1,540.00
4.2.6	BUCKET-LIGHT MATERIAL, BOLT ON CUTTING EDGE 74"	$ 1,390.00
4.2.7	BUCKET-LIGHT MATERIAL, BOLT ON CUTTING EDGE 80"	$ 1,490.00
4.2.8	BUCKET-LIGHT MATERIAL, BOLT ON CUTTING EDGE 86" (1.1 CU. YD.)	$ 1,600.00
4.2.9	BUCKET-LIGHT MATERIAL, BOLT ON CUTTING EDGE 86" (1.4 CU. YD.)	$ 1,780.00
4.2.10	BUCKET-LIGHT MATERIAL, BOLT ON CUTTING EDGE 98"	$ 1,800.00
4.2.11	BUCKET-LIGHT MATERIAL, BOLT ON CUTTING EDGE 104"	$ 1,870.00
4.2.12	BUCKET-LOW PROFILE, BOLT ON CUTTING EDGE 56"	$ 740.00
4.2.13	BUCKET-LOW PROFILE, BOLT ON CUTTING EDGE 62"	$ 850.00
4.2.14	BUCKET-LOW PROFILE, BOLT ON CUTTING EDGE 68"	$ 950.00
4.2.15	BUCKET-LOW PROFILE, BOLT ON CUTTING EDGE 74"	$ 1,050.00
4.2.16	BUCKET-LOW PROFILE, BOLT ON CUTTING EDGE 80"	$ 1,160.00
4.2.17	BUCKET-MULTI-PURPOSE, BOLT ON CUTTING EDGE W/SG, 62"	$ 3,030.00
4.2.18	BUCKET-MULTI-PURPOSE, BOLT ON TEETH W/SG 62"	$ 3,030.00
4.2.19	BUCKET-MULTI-PURPOSE, W/BO EDGE 68" W/SG	$ 3,290.00
4.2.20	BUCKET-MULTI-PURPOSE, BOLT ON TEETH 68" W/SG	$ 3,290.00
4.2.21	BUCKET-MULTI-PURPOSE, BOLT ON CUTTING EDGE 74" W/SG	$ 3,540.00
4.2.22	BUCKET-MULTI-PURPOSE, BOLT ON TEETH 74" W/SG	$ 3,540.00
4.2.23	BUCKET-MULTI-PURPOSE, BOLT ON CUTTING EDGE 80" W/SG	$ 3,800.00
4.2.24	BUCKET-MULTI-PURPOSE, BOLT ON TEETH 80" W/SG	$ 3,800.00
4.2.25	BUCKET-MULTI-PURPOSE, BOLT ON CUTTING EDGE 86" W/SG	$ 4,050.00
4.2.26	BUCKET-MULTI-PURPOSE, BOLT ON TEETH 86" W/SG	$ 4,050.00
4.2.27	BUCKET-TOOTH, BOLT ON TEETH 62"	$ 1,180.00
4.2.28	BUCKET-TOOTH, BOLT ON TEETH 68"	$ 1,270.00
4.2.29	BUCKET-TOOTH, BOLT ON TEETH 74"	$ 1,360.00
4.2.30	BUCKET-TOOTH, BOLT ON TEETH 80"	$ 1,470.00
4.2.31	BUCKET-TOOTH, BOLT ON TEETH 86"	$ 1,560.00
4.2.32	BUCKET-UTILITY, BOLT ON CUTTING EDGE 62"	$ 1,030.00
4.2.33	BUCKET-UTILITY, BOLT ON CUTTING EDGE 68"	$ 1,130.00
4.2.34	BUCKET-UTILITY, BOLT ON CUTTING EDGE 74"	$ 1,230.00

SKID / COMPACT TRACK LOADER
OPTIONS - FIXED PRICING
SPECIFICATION 4.0

Spec #	Description	Price
4.3	**Overtire tracks:**	
	Use this section to offer overtire tracks.	
4.4	**Forks:**	
	Use this section to offer fork options, such as pallet forks, bale handler, etc..	
4.4.1	FORKS, 48" PALLET W/ CARRIAGE	$ 710.00
4.4.2	FORKS, 66" INDUSTRIAL GRAPPLE	$ 4,640.00
4.4.3	FORKS, 72" INDUSTRIAL GRAPPLE	$ 5,540.00
4.5	**Adaptor Plate:**	
	Use this section to offer adaptor plate options.	
	Universal Adapter Plate	$ 220.00
4.6	**Snowblower:**	
	Use this section to offer snowblower options.	
4.6.1	SR115 SNOW BLOWER, 60" WORKING WIDTH, 20-23 GPM HYDRAULIC FLOW	$ 6,990.00
4.6.2	SR118 SNOW BLOWER, 72" WORKING WIDTH, 20-23 GPM HYDRAULIC FLOW	$ 7,100.00
4.6.3	SR121 SNOW BLOWER, 85" WORKING WIDTH, 20-23 GPM HYDRAULIC FLOW	$ 7,200.00
4.6.4	SR318 SNOW BLOWER, 72" WORKING WIDTH, 31-33 GPM HYDRAULIC FLOW	$ 7,470.00
4.6.5	SR321 SNOW BLOWER, 85" WORKING WIDTH, 31-33 GPM HYDRAULIC FLOW	$ 7,950.00
4.7	**Sweeper:**	
	Use this section to offer sweeper options.	
4.7.1	BA118C, MANUAL ANGLE, 83" WIDTH	$ 5,970.00
4.7.2	BA118C, HYDRAULIC ANGLE, 83" WIDTH	$ 7,120.00
4.7.3	BP115C, PICKUP BROOM	$ 5,530.00
4.7.4	BP118C, PICKUP BROOM	$ 5,940.00
4.7.5	BU115, UTILITY BROOM	$ 3,770.00
4.7.6	BU118, UTILITY BROOM	$ 4,100.00
4.8	**Backhoe:**	
	Use this section to offer backhoe options.	
4.8.1	BACKHOE, BH150 (INCLUDES D SERIES MOUNTING BRACKET AND 24" BUCKET).	$ 14,830.00
4.8.2	BACKHOE, BH160 W/ AUXILIARY (INCLUDES D SERIES MOUNTING BRACKET AND 24" BUCKET).	$ 15,280.00
4.9	**Planer:**	
	Use this section to offer planer options.	
4.9.1	COLD PLANER, PC104B, 14" WORKING WIDTH, 16-21 GPM REQUIRED HYDRAULIC FLOW	$ 10,000.00
4.9.2	COLD PLANER, PC205B, 18" WORKING WIDTH, 21-31 GPM REQUIRED HYDRAULIC FLOW	$ 12,550.00
4.9.3	COLD PLANER, PC305B, 18" WORKING WIDTH, 26-33 GPM REQUIRED HYDRAULIC FLOW	$ 15,400.00
4.9.4	COLD PLANER, PC306B, 24" WORKING WIDTH, 26-33 GPM REQUIRED HYDRAULIC FLOW	$ 16,510.00
4.9.5	COLD PLANER, PC408B, 30" WORKING WIDTH, 40 GPM REQUIRED HYDRAULIC FLOW	$ 19,490.00
4.9.6	COLD PLANER, PC310B, 39" WORKING WIDTH, 33 GPM REQUIRED HYDRAULIC FLOW	$ 23,010.00
4.9.7	COLD PLANER, PC412, 47" WORKING WIDTH, 40 GPM REQUIRED HYDRAULIC FLOW	$ 25,560.00
4.10	**Snow Plow:**	
	Use this section to offer snow plow options.	
4.10.1	SNOW PLOW, 72"	$ 3,580.00
4.10.2	SNOW PLOW, 84"	$ 3,780.00
4.10.3	SNOW PLOW, 96"	$ 3,980.00
4.10.4	SNOW PLOW, 108"	$ 4,240.00
4.10.5	SNOW PLOW, 120"	$ 4,780.00
4.10.6	SNOW PUSH, SSL, STD DTY 8'	$ 2,520.00
4.10.7	SNOW PUSH, SSL, STD DTY 10'	$ 2,970.00
4.10.8	SNOW PUSH, SSL, STD DTY 12'	$ 3,530.00
4.11	**Hydraulic breaker:**	
	Use this section to offer hydraulic breaker options.	
4.11.1	H55S HAMMER WITH SSL MOUNTS	$ 7,850.00
4.11.2	H65S HAMMER WITH SSL MOUNTS	$ 9,230.00
4.11.3	B4 HAMMER, NON-SILENCED WITH SSL MOUNTS	$ 4,390.00
4.11.4	B4S HAMMER, SILENCED WITH SSL MOUNTS	$ 4,880.00
4.11.5	B6S HAMMER, SILENCED WITH SSL MOUNTS	$ 7,100.00
4.11.6	B6S HAMMER, NON-SILENCED WITH SSL MOUNTS	$ 6,390.00
4.11.7	B8S HAMMER, SILENCED WITH SSL MOUNTS	$ 9,430.00
4.11.8	B8 HAMMER, NON-SILENCED WITH SSL MOUNTS	$ 8,490.00

SKID / COMPACT TRACK LOADER
OPTIONS - FIXED PRICING
SPECIFICATION 4.0

Spec #	Description	Price
4.12	**Grapple:**	
	Use this section to offer grapple options.	
4.12.1	BUCKET, UTILITY GRAPPLE 68"	$ 2,430.00
4.12.2	BUCKET, UTILITY GRAPPLE 74"	$ 2,530.00
4.12.3	BUCKET, INDUSTRIAL GRAPPLE 62"	$ 3,590.00
4.12.4	BUCKET, INDUSTRIAL GRAPPLE 68"	$ 3,760.00
4.12.5	BUCKET, INDUSTRIAL GRAPPLE 74"	$ 4,210.00
4.12.6	BUCKET, INDUSTRIAL GRAPPLE 80"	$ 4,640.00
4.12.7	GRAPPLE RAKE 72"	$ 3,140.00
4.12.8	GRAPPLE RAKE 84"	$ 3,510.00
4.13	**Landscape:**	
	Use this section to offer landscape options.	
4.13.1	BRUSHCUTTER, BR160, 60"	$ 4,700.00
4.13.2	BRUSHCUTTER, BR166, 66"	$ 4,910.00
4.13.3	BRUSHCUTTER, BR172, 72"	$ 5,130.00
4.13.4	BRUSHCUTTER, BR272, 72" HF	$ 5,350.00
4.13.5	BRUSHCUTTER, BR378, 78" HF,XPS	$ 6,440.00
4.13.6	BRUSHCUTTER, BRX118 72"	$ 11,850.00
4.13.7	BRUSHCUTTER, BRX318 72", HF, XPS	$ 12,170.00
4.13.8	BRUSHCUTTER, BRX418	$ 12,170.00
4.13.9	LANDSCAPE RAKE, LR15B	$ 5,910.00
4.13.10	LANDSCAPE RAKE, LR18B	$ 6,330.00
4.13.11	LANDSCAPE TILLER, LT13B	$ 4,180.00
4.13.12	LANDSCAPE TILLER, LT18B	$ 4,740.00
4.13.13	MULCHER, HM112C, 49", 16-18 GPM REQUIRED HYDRAULIC FLOW	$ 19,330.00
4.13.14	MULCHER, HM115C, 58", 20-23 GPM REQUIRED HYDRAULIC FLOW	$ 20,330.00
4.13.15	MULCHER, HM215C, 58", 25-31 GPM REQUIRED HYDRAULIC FLOW	$ 21,080.00
4.13.16	MULCHER, HM315C, 58", 31-33 GPM REQUIRED HYDRAULIC FLOW	$ 27,830.00
4.13.17	MULCHER, HM415C, 58.6", 36-41 GPM REQUIRED HYDRAULIC FLOW	$ 30,300.00
4.13.18	MULCHER, HM418C, 67.2", 40-41 GPM REQUIRED HYDRAULIC FLOW	$ 32,230.00
4.13.19	POWER BOX RAKE-HYDRAULIC,PR172	$ 8,620.00
4.13.20	POWER BOX RAKE-HYDRAULIC,PR184	$ 9,120.00
4.13.21	POWER BOX RAKE-HYDRAULIC,PR190	$ 9,830.00
4.13.22	POWER BOX RAKE-MANUAL, PR172	$ 7,910.00
4.13.23	POWER BOX RAKE-MANUAL, PR184	$ 8,190.00
4.13.24	STUMP GRINDER, SG16B	$ 6,370.00
4.13.25	STUMP GRINDER, SG18B	$ 7,370.00
4.13.26	TRENCHER, T6B, 36" BOOM LENGTH	$ 4,610.00
4.13.27	TRENCHER, T9B, 48" BOOM LENGTH	$ 4,880.00
4.13.28	TRENCHER, T15B 6", 60" BOOM LENGTH	$ 6,250.00
4.14	**Grader:**	
	Use this section to offer grader options.	
4.14.1	BB121, 84", GRADING BOX, INCLUDES TECHNOLOGY AND INSTALLATION.	$ 15,890.00
4.14.2	BB124, 96", GRADING BOX, INCLUDES TECHNOLOGY AND INSTALLATION.	$ 16,200.00
4.14.3	BLADE, DOZER, 6-WAY, 79"	$ 5,070.00
4.14.4	BLADE, DOZER, 6-WAY, 92"	$ 5,570.00
4.15	**Auger:**	
	Use this section to offer auger options.	
4.15.1	AUGER, A14B	$ 1,900.00
4.15.2	AUGER, A19B	$ 2,250.00
4.15.3	AUGER, A26B, HF	$ 3,620.00
4.15.4	BIT, AUGER 6"	$ 290.00
4.15.5	BIT, AUGER 9"	$ 380.00
4.15.6	BIT, AUGER 12"	$ 480.00
4.15.7	BIT, AUGER 15" STANDARD	$ 580.00
4.15.8	BIT, AUGER 18"	$ 670.00
4.15.9	BIT, AUGER 24"	$ 860.00
4.15.10	BIT, AUGER 30"	$ 1,050.00
4.15.11	BIT, AUGER 36"	$ 1,230.00
4.15.12	BIT, AUGER 6" INDUSTRIAL	$ 400.00
4.15.13	BIT, AUGER 9" INDUSTRIAL	$ 490.00
4.15.14	BIT, AUGER 12" INDUSTRIAL	$ 580.00
4.15.15	BIT, AUGER 16" INDUSTRIAL	$ 700.00
4.15.16	BIT, AUGER 18" INDUSTRIAL	$ 770.00
4.15.17	BIT, AUGER 24" INDUSTRIAL	$ 1,130.00
4.15.18	TREE BIT, AUGER 24"	$ 760.00
4.15.19	TREE BIT, AUGER 36"	$ 1,190.00
4.15.20	ADAPTER, AUGER - HEX TO ROUND	$ 140.00
4.15.21	ADAPTER, AUGER - ROUND TO HEX	$ 120.00
4.15.22	EXTENSION, TELESCOPING 3'	$ 280.00
4.15.23	EXTENSION, TELESCOPING 6'	$ 470.00
4.15.24	EXTENSION, AUGER 12"	$ 120.00
4.15.25	EXTENSION, AUGER 24"	$ 170.00

SKID / COMPACT TRACK LOADER
OPTIONS - FIXED PRICING
SPECIFICATION 4.0

Spec #	Description		Price
4.16	**Wheel saw:**		
	Use this section to offer wheel saw options.		
4.16.1	WHEEL SAW, SW345B, 3"	$	19,340.00
4.16.2	WHEEL SAW, SW360B, 3"	$	21,910.00
4.16.3	WHEEL SAW, SW360B, 6"	$	22,270.00
4.16.4	WHEEL SAW, SW360B, 8"	$	23,320.00
4.16.5	WHEEL SAW, SW460B, 3"	$	22,270.00
4.16.6	WHEEL SAW, SW460, 6"	$	22,940.00
4.16.7	WHEEL SAW, SW460, 8"	$	23,320.00
4.16.8	WHEEL SAW, SW380B, 10"	$	30,810.00
4.17	**Vibratory roller:**		
	Use this section to offer vibratory roller options.		
4.17.1	CV16B, VIBRATORY COMPACTOR	$	9,470.00
4.17.2	CV18B, VIBRATORY COMPACTOR	$	10,150.00
4.18	**Other:**		
	Use this section to offer any other option not already covered.		
4.18.1	S305, SSL SHEARS - 9.4" JAW OPENING	$	23,510.00
4.18.2	MATERIAL HANDLING ARM, 84", 2,000 LB. CAPACITY	$	1,320.00
4.18.3	MB200, MIXING BUCKET	$	5,510.00
4.18.4	MB250, MIXING BUCKET	$	5,770.00
4.19	**EXTENDED WARRANTY OPTIONS**		
	Use this section to offer performance/warranty options, number these items starting with 20.1, 20.2, 20.3, etc. **(Specify years, miles or hours extended term covers.)**		
4.19.1	3 Year / 3,000 Hour Powertrain Warranty	$	410.00
4.19.2	3 Year / 4,000 Hour Powertrain Warranty	$	520.00
4.19.3	3 Year / 5,000 Hour Powertrain Warranty	$	610.00
4.19.4	3 Year / 3,000 Hour Powertrain + Hydraulics + Technology Warranty	$	720.00
4.19.5	3 Year / 4,000 Hour Powertrain + Hydraulics + Technology Warranty	$	920.00
4.19.6	3 Year / 5,000 Hour Powertrain + Hydraulics + Technology Warranty	$	1,060.00
4.19.7	3 Year - 3,000 Hour Premier Warranty	$	1,150.00
4.19.8	3 Year - 4,000 Hour Premier Warranty	$	1,470.00
4.19.9	3 Year - 5,000 Hour Premier Warranty	$	1,700.00
4.19.10	4 Year / 3,000 Hour Powertrain Warranty	$	480.00
4.19.11	4 Year / 4,000 Hour Powertrain Warranty	$	870.00
4.19.12	4 Year / 5,000 Hour Powertrain Warranty	$	980.00
4.19.13	4 Year / 3,000 Hour Powertrain + Hydraulics + Technology Warranty	$	830.00
4.19.14	4 Year / 4,000 Hour Powertrain + Hydraulics + Technology Warranty	$	1,520.00
4.19.15	4 Year / 5,000 Hour Powertrain + Hydraulics + Technology Warranty	$	1,730.00
4.19.16	4 Year - 3,000 Hour Premier Warranty	$	1,340.00
4.19.17	4 Year - 4,000 Hour Premier Warranty	$	2,450.00
4.19.18	4 Year - 5,000 Hour Premier Warranty	$	2,770.00
4.19.19	5 Year / 3,000 Hour Powertrain Warranty	$	540.00
4.19.20	5 Year / 4,000 Hour Powertrain Warranty	$	980.00
4.19.21	5 Year / 5,000 Hour Powertrain Warranty	$	1,530.00
4.19.22	5 Year / 3,000 Hour Powertrain + Hydraulics + Technology Warranty	$	960.00
4.19.23	5 Year / 4,000 Hour Powertrain + Hydraulics + Technology Warranty	$	1,730.00
4.19.24	5Year / 5,000 Hour Powertrain + Hydraulics + Technology Warranty	$	2,690.00
4.19.25	5 Year - 3,000 Hour Premier Warranty	$	1,530.00
4.19.26	5 Year - 4,000 Hour Premier Warranty	$	2,770.00
4.19.27	5 Year - 5,000 Hour Premier Warranty	$	4,310.00
4.19.28	6 Year / 3,000 Hour Powertrain Warranty	$	630.00
4.19.29	6 Year / 4,000 Hour Powertrain Warranty	$	1,120.00
4.19.30	6 Year / 5,000 Hour Powertrain Warranty	$	1,720.00
4.19.31	6 Year / 3,000 Hour Powertrain + Hydraulics + Technology Warranty	$	1,090.00
4.19.32	6 Year / 4,000 Hour Powertrain + Hydraulics + Technology Warranty	$	1,950.00
4.19.33	6Year / 5,000 Hour Powertrain + Hydraulics + Technology Warranty	$	3,010.00
4.19.34	6 Year - 3,000 Hour Premier Warranty	$	1,750.00
4.19.35	6 Year - 4,000 Hour Premier Warranty	$	3,120.00
4.19.36	6 Year - 5,000 Hour Premier Warranty	$	4,810.00
4.19.37	7 Year / 3,000 Hour Powertrain Warranty	$	720.00
4.19.38	7 Year / 4,000 Hour Powertrain Warranty	$	1,250.00
4.19.39	7 Year / 5,000 Hour Powertrain Warranty	$	1,920.00
4.19.40	7 Year / 3,000 Hour Powertrain + Hydraulics + Technology Warranty	$	1,250.00
4.19.41	7 Year / 4,000 Hour Powertrain + Hydraulics + Technology Warranty	$	2,190.00
4.19.42	7Year / 5,000 Hour Powertrain + Hydraulics + Technology Warranty	$	3,360.00
4.19.43	7 Year - 3,000 Hour Premier Warranty	$	2,000.00
4.19.44	7 Year - 4,000 Hour Premier Warranty	$	3,500.00
4.19.45	7 Year - 5,000 Hour Premier Warranty	$	5,370.00
4.19.46	*does not include travel charges		
4.19.47	*see attached warranty statement		

SKID / COMPACT TRACK LOADER
OPTIONS - FIXED PRICING
SPECIFICATION 4.0

Spec #	Description	Price
4.20	**NEW EQUIPMENT RENTAL PROGRAM** If rental programs are available on the new equipment offered, with the option to purchase, list the hourly/weekly/monthly rental rate. Indicate the percent of rental fee paid by the purchaser that will be applied to the purchase price. See Solicitation Special Terms & Conditions.	
	Hourly Rental Rate:	$20.00
	Weekly Rental Rate:	$330.00
	Monthly Rental Rate:	$990.00
	Percent (%) of Rental Fee applied to purchase price:	100%
	If the new rental equipment is purchased and finance Charges are applicable for the actual rental term only. State the actual interest rate here: _____Prime + 3%_____	
4.21	**VENDOR OWNED RENTAL RETURN OR DEMO EQUIPMENT PROGRAM** (See Solicitation Special Terms and Conditions.)	
	DEDUCT cost per Used Hour from the original Contract Price	$9.00
4.22	**DELIVERY STARTING POINT - City, State, Zip**	Nearest Ziegler Location
	(See Special Terms and Conditions - no flat rate allowed.) **Price Per Loaded Mile:**	$3.00
4.23	**INSTALLATION - PER HOUR (Hourly Shop Rate):** Installation services may be requested on an "as needed" basis - see special terms and conditions.)	$138.00
4.24	**PRICE FOR ADDITIONAL MANUALS** (1 of each included at no cost, per specs)	
	ADDITIONAL SERVICE MANUAL	
	Digital	$ 50.00
	Paper	$ 950.00
	ADDITIONAL PARTS MANUAL	
	Digital	$ 50.00
	Paper	$ 50.00
	PRICE FOR ADDITIONAL OPERATIONS MANUAL	
	Digital	$ 50.00
	Paper	$ 50.00
4.25	**DISCOUNT OFF LIST PRICE FOR RELATED PARTS & ACCESSORIES** (See Special Terms and Conditions)	%

T-631
Tractors: Skid Steers Attachments
 # 727-1019

October, 2019

Skid Steer / Compact Track Loaders

FIXED PRICING
(BASE UNIT INFORMATION)
Specification 3.0

Vendor Name:	**Ziegler Inc.**
Contact Person:	**Cory Dalbec, Chris Rice**
Street Address:	**901 West 94th Street**
P.O. Box:	
City, State, Zip	**Bloomington, MN 55420**
Phone #:	**952.888.4121**
Toll Free #:	**800.352.2812**
Email Address:	**cory.dalbec@zieglercat.com, chris.rice@zieglercat.com**
Website:	www.zieglercat.com

Spec #	Information Requested	Answer
3.1	**MAKE AND MODEL**	Caterpillar 246D3
	Engine Type and SAE net HP	Cat 3.3B DIT (Turbo) 72.9 HP
	Tier	Tier 4 Final
	Length w/o attachments	117.8"
	Height with operator cab	83.1
	Ground clearance	8.9"
	Maximum height to bucket hinge pin	124.2"
	Breakout force	7,355 lb
	Reach at maximum height	23.6
	Dump angle at maximum height	39 degrees
	Dump height with standard bucket	97.1"
	Front clearance circle with standard bucket	85.9"
	Rear clearance circle	71.2"
	Tipping load - SAE rated	4.400 lbs.
	Rated operating capacity - SAE	2,200 lbs.
	Standard bucket capacity - SAE heaped rating	.57 cu yd
	Operating weight - SAE rated	7.478 lbs.
	Travel speed	1 speed -7.7 mph 2-speed 11 mph
	Fuel tank capacity	27.7 gallons
	Cold weather starting assist	Glow Plugs
	Battery CCA	850 CCA
	Alternator size - amps	80 amps
	Transmission type	Hydrostatic
	Tire / Track size / width	TIRES, 12X16.5 10PR CAT- 72" WIDTH
	Final drive chains and drive method	#100 pre-stressed chain Direct sprocket to chain drive
	Final drive chain adjustment / maintenance	500 Hours
	Gauges / instrumentation	Gauges: fuel level, hour meter Instrumentation: Engine coolant temperature, engine oil pressure, hydraulic oil temperature
	Pump type - GPM and PSI	Piston/23 GPM/3335 PSI
	Control valves	Hydraulic 3 section
	Hydraulic oil cooler	Included - air to oil
	Drive controls	Electro/Hydraulic - hand controls
	Lift and tilt controls	Electro/Hydraulic - hand controls
	Engine speed control	Both foot and hand control
	Work lights - front	Included 2 each
	Work lights - rear	Included 2 each
	Warranty	2 years / unlimited hours full machine
	BASE UNIT PRICE:	$ 43,300.00

SKID / COMPACT TRACK LOADER
OPTIONS - FIXED PRICING
SPECIFICATION 4.0

Spec #	Description	Price
	Price for base unit:	$ 43,300.00
4.1	**Skid/Compact Track Loader Options:** Use this section to offer additional skid/track loader options such as hand controls, gauges, heater, enclosed cab etc.. These options should be for skid steer power unit and not attachments.	
4.1.1	PRESSURIZED CAB, HEATER/DEFROSTER & DOOR	$ (1,390.00)
4.1.2	PRESSURIZED CAB, HEATER/DEFROSTER, AIR CONDITIONING & DOOR	INCLUDED
4.1.3	OPEN ROPS	$ (3,020.00)
4.1.4	AIR SUSPENSION SEAT-VINYL	$ (20.00)
4.1.5	AIR SUSPENSION SEAT-CLOTH	INCLUDED
4.1.6	PROPORTIONAL WORK TOOL CONTROL	INCLUDED
4.1.7	HAND & FOOT CONTROLS	$ 290.00
4.1.8	TWO SPEED CONTROL	INCLUDED
4.1.9	HYDRAULIC COUPLER	INCLUDED
4.1.10	MANUAL COUPLER	$ (680.00)
4.1.11	FAN, COOLING, DEMAND	INCLUDED
4.1.12	FAN, COOLING, DEMAND, REVERSING	$ 570.00
4.1.13	RIDE CONTROL	$ 710.00
4.1.14	HIGH FLOW HYDRAULICS	$ 2,080.00
4.1.15	DOOR, CAB, POLYCARBONATE	$ 150.00
4.1.16	DOOR, CAB, GLASS	INCLUDED
4.1.17	RADIO AM-FM, CD, BLUETOOTH	INCLUDED
4.1.18	ADVANCED DISPLAY WITH BACKUP CAMERA	INCLUDED
4.1.19	PROPORTIONAL HYDRAULICS	$ (280.00)
4.1.20	DUAL SELF-LEVELING	INCLUDED
4.1.21	HEAVY DUTY BATTERY W/DISCONNECT	$ 90.00
4.1.22	LIGHTS LED	INCLUDED
4.1.23	HALOGEN LIGHTS	$ (190.00)
4.1.24	BEACON LIGHT	$ 150.00
4.1.25	REAR LIGHTS	INCLUDED
4.1.26	REAR LIGHTS, STOP/TAIL/TURN	$ 540.00
4.1.27	ROADING LIGHTS	$ 680.00
4.1.28	SEAT BELT, 2"	INCLUDED
4.1.29	SEAT BELT, 3"	$ 200.00
4.1.30	RETURN TO DIG/ WORKTOOL POSITIONER	INCLUDED
4.1.31	COUNTERWEIGHT, MACHINE EXTERNAL	$ 700.00
4.1.32	MOUNTING, FIRE EXTINGUISHER	$ 290.00
4.1.33	SINGLE EYE LIFTING POINT	$ 1,200.00
4.1.34	LIFTING EYE 4 POINT	$ 130.00
4.1.35	FOPS, LEVEL 2	$ 2,700.00
4.1.36	HEATER, ENGINE COOLANT, 120V	$ 140.00
4.1.37	PRODUCT LINK, CELLULAR, PL243	INCLUDED
4.1.38	PRODUCT LINK, CELLULAR, PL641	$ 320.00
4.1.39	OIL, HYDRAULIC, COLD OPERATION	$ 450.00
4.1.40	PATTERN CHANGER	$ 750.00
4.1.41	CASE DEDICATED CONTROLS	$ 100.00
4.1.42	PAINT, CUSTOM	$ 1,460.00
4.1.43	CORRISION INHIBITOR - EquipCoat Spray / Clear Coat	$ 2,500.00
4.1.44	TIRES, 12/16.5 CAT 10PR	INCLUDED
4.1.45	TIRES, 12 X 16.5 14PR CAT, XD- 66" WIDTH	$ 1,060.00
4.1.46	TIRES, 12 X 16.5 10PR CAT- 66" WIDTH	$ 700.00
4.1.47	TIRES, 33 X 6 X 11 CAT, FLXPRT- 72" WIDTH	$ 2,240.00
4.1.48	TIRES, 12 X 16.5 14PR CAT, XD- 72" WIDTH	$ 1,060.00
4.1.49	TIRES, 12 X 16.5 10PR CAT- 72" WIDTH	$ 700.00
4.2	**Bucket Options:** Use this section to offer bucket options such as standard, snow or combination buckets, etc..	
4.2.1	BUCKET-GENERAL PURPOSE, BOLT ON CUTTING EDGE 62"	$ 1,130.00
4.2.2	BUCKET-GENERAL PURPOSE, BOLT ON CUTTING EDGE 68"	$ 1,230.00
4.2.3	BUCKET-GENERAL PURPOSE, BOLT ON CUTTING EDGE 74"	$ 1,360.00
4.2.4	BUCKET-GENERAL PURPOSE, BOLT ON CUTTING EDGE 80"	$ 1,440.00
4.2.5	BUCKET-GENERAL PURPOSE, BOLT ON CUTTING EDGE 86"	$ 1,540.00
4.2.6	BUCKET-LIGHT MATERIAL, BOLT ON CUTTING EDGE 74"	$ 1,390.00
4.2.7	BUCKET-LIGHT MATERIAL, BOLT ON CUTTING EDGE 80"	$ 1,490.00
4.2.8	BUCKET-LIGHT MATERIAL, BOLT ON CUTTING EDGE 86" (1.1 CU. YD.)	$ 1,600.00
4.2.9	BUCKET-LIGHT MATERIAL, BOLT ON CUTTING EDGE 86" (1.4 CU. YD.)	$ 1,780.00
4.2.10	BUCKET-LIGHT MATERIAL, BOLT ON CUTTING EDGE 98"	$ 1,800.00
4.2.11	BUCKET-LIGHT MATERIAL, BOLT ON CUTTING EDGE 104"	$ 1,870.00
4.2.12	BUCKET-LOW PROFILE, BOLT ON CUTTING EDGE 56"	$ 740.00
4.2.13	BUCKET-LOW PROFILE, BOLT ON CUTTING EDGE 62"	$ 850.00
4.2.14	BUCKET-LOW PROFILE, BOLT ON CUTTING EDGE 68"	$ 950.00
4.2.15	BUCKET-LOW PROFILE, BOLT ON CUTTING EDGE 74"	$ 1,050.00
4.2.16	BUCKET-LOW PROFILE, BOLT ON CUTTING EDGE 80"	$ 1,160.00
4.2.17	BUCKET-MULTI-PURPOSE, BOLT ON CUTTING EDGE W/SG, 62"	$ 3,030.00
4.2.18	BUCKET-MULTI-PURPOSE, BOLT ON TEETH W/SG 62"	$ 3,030.00
4.2.19	BUCKET-MULTI-PURPOSE, W/BO EDGE 68" W/SG	$ 3,290.00
4.2.20	BUCKET-MULTI-PURPOSE, BOLT ON TEETH 68" W/SG	$ 3,290.00
4.2.21	BUCKET-MULTI-PURPOSE, BOLT ON CUTTING EDGE 74" W/SG	$ 3,540.00
4.2.22	BUCKET-MULTI-PURPOSE, BOLT ON TEETH 74" W/SG	$ 3,540.00
4.2.23	BUCKET-MULTI-PURPOSE, BOLT ON CUTTING EDGE 80" W/SG	$ 3,800.00
4.2.24	BUCKET-MULTI-PURPOSE, BOLT ON TEETH 80" W/SG	$ 3,800.00
4.2.25	BUCKET-MULTI-PURPOSE, BOLT ON CUTTING EDGE 86" W/SG	$ 4,050.00
4.2.26	BUCKET-MULTI-PURPOSE, BOLT ON TEETH 86" W/SG	$ 4,050.00
4.2.27	BUCKET-TOOTH, BOLT ON TEETH 62"	$ 1,180.00
4.2.28	BUCKET-TOOTH, BOLT ON TEETH 68"	$ 1,270.00
4.2.29	BUCKET-TOOTH, BOLT ON TEETH 74"	$ 1,360.00
4.2.30	BUCKET-TOOTH, BOLT ON TEETH 80"	$ 1,470.00
4.2.31	BUCKET-TOOTH, BOLT ON TEETH 86"	$ 1,560.00
4.2.32	BUCKET-UTILITY, BOLT ON CUTTING EDGE 62"	$ 1,030.00
4.2.33	BUCKET-UTILITY, BOLT ON CUTTING EDGE 68"	$ 1,130.00
4.2.34	BUCKET-UTILITY, BOLT ON CUTTING EDGE 74"	$ 1,230.00

SKID / COMPACT TRACK LOADER
OPTIONS - FIXED PRICING
SPECIFICATION 4.0

Spec #	Description	Price
4.3	**Overtire tracks:**	
	Use this section to offer overtire tracks.	
4.4	**Forks:**	
	Use this section to offer fork options, such as pallet forks, bale handler, etc..	
4.4.1	FORKS, 48" PALLET W/ CARRIAGE	$ 710.00
4.4.2	FORKS, 66" INDUSTRIAL GRAPPLE	$ 4,640.00
4.4.3	FORKS, 72" INDUSTRIAL GRAPPLE	$ 5,540.00
4.5	**Adaptor Plate:**	
	Use this section to offer adaptor plate options.	
	Universal Adapter Plate	$ 220.00
4.6	**Snowblower:**	
	Use this section to offer snowblower options.	
4.6.1	SR115 SNOW BLOWER, 60" WORKING WIDTH, 20-23 GPM HYDRAULIC FLOW	$ 6,990.00
4.6.2	SR118 SNOW BLOWER, 72" WORKING WIDTH, 20-23 GPM HYDRAULIC FLOW	$ 7,100.00
4.6.3	SR121 SNOW BLOWER, 85" WORKING WIDTH, 20-23 GPM HYDRAULIC FLOW	$ 7,200.00
4.6.4	SR318 SNOW BLOWER, 72" WORKING WIDTH, 31-33 GPM HYDRAULIC FLOW	$ 7,470.00
4.6.5	SR321 SNOW BLOWER, 85" WORKING WIDTH, 31-33 GPM HYDRAULIC FLOW	$ 7,950.00
4.7	**Sweeper:**	
	Use this section to offer sweeper options.	
4.7.1	BA118C, MANUAL ANGLE, 83" WIDTH	$ 5,970.00
4.7.2	BA118C, HYDRAULIC ANGLE, 83" WIDTH	$ 7,120.00
4.7.3	BP115C, PICKUP BROOM	$ 5,530.00
4.7.4	BP118C, PICKUP BROOM	$ 5,940.00
4.7.5	BU115, UTILITY BROOM	$ 3,770.00
4.7.6	BU118, UTILITY BROOM	$ 4,100.00
4.8	**Backhoe:**	
	Use this section to offer backhoe options.	
4.8.1	BACKHOE, BH150 (INCLUDES D SERIES MOUNTING BRACKET AND 24" BUCKET).	$ 14,830.00
4.8.2	BACKHOE, BH160 W/ AUXILIARY (INCLUDES D SERIES MOUNTING BRACKET AND 24" BUCKET).	$ 15,280.00
4.9	**Planer:**	
	Use this section to offer planer options.	
4.9.1	COLD PLANER, PC104B, 14" WORKING WIDTH, 16-21 GPM REQUIRED HYDRAULIC FLOW	$ 10,000.00
4.9.2	COLD PLANER, PC205B, 18" WORKING WIDTH, 21-31 GPM REQUIRED HYDRAULIC FLOW	$ 12,550.00
4.9.3	COLD PLANER, PC305B, 18" WORKING WIDTH, 26-33 GPM REQUIRED HYDRAULIC FLOW	$ 15,400.00
4.9.4	COLD PLANER, PC306B, 24" WORKING WIDTH, 26-33 GPM REQUIRED HYDRAULIC FLOW	$ 16,510.00
4.9.5	COLD PLANER, PC408B, 30" WORKING WIDTH, 40 GPM REQUIRED HYDRAULIC FLOW	$ 19,490.00
4.9.6	COLD PLANER, PC310B, 39" WORKING WIDTH, 33 GPM REQUIRED HYDRAULIC FLOW	$ 23,010.00
4.9.7	COLD PLANER, PC412, 47" WORKING WIDTH, 40 GPM REQUIRED HYDRAULIC FLOW	$ 25,560.00
4.10	**Snow Plow:**	
	Use this section to offer snow plow options.	
4.10.1	SNOW PLOW, 72"	$ 3,580.00
4.10.2	SNOW PLOW, 84"	$ 3,780.00
4.10.3	SNOW PLOW, 96"	$ 3,980.00
4.10.4	SNOW PLOW, 108"	$ 4,240.00
4.10.5	SNOW PLOW, 120"	$ 4,780.00
4.10.6	SNOW PUSH, SSL, STD DTY 8'	$ 2,520.00
4.10.7	SNOW PUSH, SSL, STD DTY 10'	$ 2,970.00
4.10.8	SNOW PUSH, SSL, STD DTY 12'	$ 3,530.00
4.11	**Hydraulic breaker:**	
	Use this section to offer hydraulic breaker options.	
4.11.1	H55S HAMMER WITH SSL MOUNTS	$ 7,850.00
4.11.2	H65S HAMMER WITH SSL MOUNTS	$ 9,230.00
4.11.3	B4 HAMMER, NON-SILENCED WITH SSL MOUNTS	$ 4,390.00
4.11.4	B4S HAMMER, SILENCED WITH SSL MOUNTS	$ 4,880.00
4.11.5	B6S HAMMER, SILENCED WITH SSL MOUNTS	$ 7,100.00
4.11.6	B6S HAMMER, NON-SILENCED WITH SSL MOUNTS	$ 6,390.00
4.11.7	B8S HAMMER, SILENCED WITH SSL MOUNTS	$ 9,430.00
4.11.8	B8 HAMMER, NON-SILENCED WITH SSL MOUNTS	$ 8,490.00
4.12	**Grapple:**	
	Use this section to offer grapple options.	
4.12.1	BUCKET, UTILITY GRAPPLE 68"	$ 2,430.00
4.12.2	BUCKET, UTILITY GRAPPLE 74"	$ 2,530.00
4.12.3	BUCKET, INDUSTRIAL GRAPPLE 62"	$ 3,590.00
4.12.4	BUCKET, INDUSTRIAL GRAPPLE 68"	$ 3,760.00
4.12.5	BUCKET, INDUSTRIAL GRAPPLE 74"	$ 4,210.00
4.12.6	BUCKET, INDUSTRIAL GRAPPLE 80"	$ 4,640.00
4.12.7	GRAPPLE RAKE 72"	$ 3,140.00
4.12.8	GRAPPLE RAKE 84"	$ 3,510.00
4.13	**Landscape:**	
	Use this section to offer landscape options.	
4.13.1	BRUSHCUTTER, BR160, 60"	$ 4,700.00
4.13.2	BRUSHCUTTER, BR166, 66"	$ 4,910.00
4.13.3	BRUSHCUTTER, BR172, 72"	$ 5,130.00
4.13.4	BRUSHCUTTER, BR272, 72" HF	$ 5,350.00
4.13.5	BRUSHCUTTER, BR378, 78" HF,XPS	$ 6,440.00
4.13.6	BRUSHCUTTER, BRX118 72"	$ 11,850.00
4.13.7	BRUSHCUTTER, BRX318 72", HF, XPS	$ 12,170.00
4.13.8	BRUSHCUTTER, BRX418	$ 12,170.00
4.13.9	LANDSCAPE RAKE, LR15B	$ 5,910.00
4.13.10	LANDSCAPE RAKE, LR18B	$ 6,330.00
4.13.11	LANDSCAPE TILLER, LT13B	$ 4,180.00
4.13.12	LANDSCAPE TILLER, LT18B	$ 4,740.00
4.13.13	MULCHER, HM112C, 49", 16-18 GPM REQUIRED HYDRAULIC FLOW	$ 19,330.00
4.13.14	MULCHER, HM115C, 58", 20-23 GPM REQUIRED HYDRAULIC FLOW	$ 20,330.00
4.13.15	MULCHER, HM215C, 58", 25-31 GPM REQUIRED HYDRAULIC FLOW	$ 21,080.00
4.13.16	MULCHER, HM315C, 58", 31-33 GPM REQUIRED HYDRAULIC FLOW	$ 27,830.00
4.13.17	MULCHER, HM415C, 58.6", 36-41 GPM REQUIRED HYDRAULIC FLOW	$ 30,300.00
4.13.18	MULCHER, HM418C, 67.2", 40-41 GPM REQUIRED HYDRAULIC FLOW	$ 32,230.00
4.13.19	POWER BOX RAKE-HYDRAULIC,PR172	$ 8,620.00
4.13.20	POWER BOX RAKE-HYDRAULIC,PR184	$ 9,120.00
4.13.21	POWER BOX RAKE-HYDRAULIC,PR190	$ 9,830.00
4.13.22	POWER BOX RAKE-MANUAL, PR172	$ 7,910.00
4.13.23	POWER BOX RAKE-MANUAL, PR184	$ 8,190.00
4.13.24	STUMP GRINDER, SG16B	$ 6,370.00
4.13.25	STUMP GRINDER, SG18B	$ 7,370.00
4.13.26	TRENCHER, T6B, 36" BOOM LENGTH	$ 4,610.00
4.13.27	TRENCHER, T9B, 48" BOOM LENGTH	$ 4,880.00
4.13.28	TRENCHER, T15B 6", 60" BOOM LENGTH	$ 6,250.00

SKID / COMPACT TRACK LOADER
OPTIONS - FIXED PRICING
SPECIFICATION 4.0

Spec #	Description	Price
4.14	**Grader:**	
	Use this section to offer grader options.	
4.14.1	BB121, 84", GRADING BOX, INCLUDES TECHNOLOGY AND INSTALLATION.	$ 15,890.00
4.14.2	BB124, 96", GRADING BOX, INCLUDES TECHNOLOGY AND INSTALLATION.	$ 16,200.00
4.14.3	BLADE, DOZER, 6-WAY, 79"	$ 5,070.00
4.14.4	BLADE, DOZER, 6-WAY, 92"	$ 5,570.00
4.15	**Auger:**	
	Use this section to offer auger options.	
4.15.1	AUGER, A14B	$ 1,900.00
4.15.2	AUGER, A19B	$ 2,250.00
4.15.3	AUGER, A26B, HF	$ 3,620.00
4.15.4	BIT, AUGER 6"	$ 290.00
4.15.5	BIT, AUGER 9"	$ 380.00
4.15.6	BIT, AUGER 12"	$ 480.00
4.15.7	BIT, AUGER 15" STANDARD	$ 580.00
4.15.8	BIT, AUGER 18"	$ 670.00
4.15.9	BIT, AUGER 24"	$ 860.00
4.15.10	BIT, AUGER 30"	$ 1,050.00
4.15.11	BIT, AUGER 36"	$ 1,230.00
4.15.12	BIT, AUGER 6" INDUSTRIAL	$ 400.00
4.15.13	BIT, AUGER 9" INDUSTRIAL	$ 490.00
4.15.14	BIT, AUGER 12" INDUSTRIAL	$ 580.00
4.15.15	BIT, AUGER 16" INDUSTRIAL	$ 700.00
4.15.16	BIT, AUGER 18" INDUSTRIAL	$ 770.00
4.15.17	BIT, AUGER 24" INDUSTRIAL	$ 1,130.00
4.15.18	TREE BIT, AUGER 24"	$ 760.00
4.15.19	TREE BIT, AUGER 36"	$ 1,190.00
4.15.20	ADAPTER, AUGER - HEX TO ROUND	$ 140.00
4.15.21	ADAPTER, AUGER - ROUND TO HEX	$ 120.00
4.15.22	EXTENSION, TELESCOPING 3'	$ 280.00
4.15.23	EXTENSION, TELESCOPING 6'	$ 470.00
4.15.24	EXTENSION, AUGER 12"	$ 120.00
4.15.25	EXTENSION, AUGER 24"	$ 170.00
4.16	**Wheel saw:**	
	Use this section to offer wheel saw options.	
4.16.1	WHEEL SAW, SW345B, 3"	$ 19,340.00
4.16.2	WHEEL SAW, SW360B, 3"	$ 21,910.00
4.16.3	WHEEL SAW, SW360B, 6"	$ 22,270.00
4.16.4	WHEEL SAW, SW360B, 8"	$ 23,320.00
4.16.5	WHEEL SAW, SW460B, 3"	$ 22,270.00
4.16.6	WHEEL SAW, SW460, 6"	$ 22,940.00
4.16.7	WHEEL SAW, SW460, 8"	$ 23,320.00
4.16.8	WHEEL SAW, SW380B, 10"	$ 30,810.00

SKID / COMPACT TRACK LOADER
OPTIONS - FIXED PRICING
SPECIFICATION 4.0

Spec #	Description	Price
4.17	**Vibratory roller:**	
	Use this section to offer vibratory roller options.	
4.17.1	CV16B, VIBRATORY COMPACTOR	$ 9,470.00
4.17.2	CV18B, VIBRATORY COMPACTOR	$ 10,150.00
4.18	**Other:**	
	Use this section to offer any other option not already covered.	
4.18.1	S305, SSL SHEARS - 9.4" JAW OPENING	$ 23,510.00
4.18.2	MATERIAL HANDLING ARM, 84", 2,000 LB. CAPACITY	$ 1,320.00
4.18.3	MB200, MIXING BUCKET	$ 5,510.00
4.18.4	MB250, MIXING BUCKET	$ 5,770.00
4.19	**EXTENDED WARRANTY OPTIONS**	
	Use this section to offer performance/warranty options, number these items starting with 20.1, 20.2, 20.3, etc. **(Specify years, miles or hours extended term covers.)**	
4.19.1	3 Year / 3,000 Hour Powertrain Warranty	$ 490.00
4.19.2	3 Year / 4,000 Hour Powertrain Warranty	$ 620.00
4.19.3	3 Year / 5,000 Hour Powertrain Warranty	$ 720.00
4.19.4	3 Year / 3,000 Hour Powertrain + Hydraulics + Technology Warranty	$ 840.00
4.19.5	3 Year / 4,000 Hour Powertrain + Hydraulics + Technology Warranty	$ 1,070.00
4.19.6	3 Year / 5,000 Hour Powertrain + Hydraulics + Technology Warranty	$ 1,240.00
4.19.7	3 Year - 3,000 Hour Premier Warranty	$ 1,350.00
4.19.8	3 Year - 4,000 Hour Premier Warranty	$ 1,720.00
4.19.9	3 Year - 5,000 Hour Premier Warranty	$ 2,000.00
4.19.10	4 Year / 3,000 Hour Powertrain Warranty	$ 570.00
4.19.11	4 Year / 4,000 Hour Powertrain Warranty	$ 1,040.00
4.19.12	4 Year / 5,000 Hour Powertrain Warranty	$ 1,170.00
4.19.13	4 Year / 3,000 Hour Powertrain + Hydraulics + Technology Warranty	$ 970.00
4.19.14	4 Year / 4,000 Hour Powertrain + Hydraulics + Technology Warranty	$ 1,790.00
4.19.15	4 Year / 5,000 Hour Powertrain + Hydraulics + Technology Warranty	$ 2,030.00
4.19.16	4 Year - 3,000 Hour Premier Warranty	$ 1,570.00
4.19.17	4 Year - 4,000 Hour Premier Warranty	$ 2,860.00
4.19.18	4 Year - 5,000 Hour Premier Warranty	$ 3,250.00
4.19.19	5 Year / 3,000 Hour Powertrain Warranty	$ 650.00
4.19.20	5 Year / 4,000 Hour Powertrain Warranty	$ 1,170.00
4.19.21	5 Year / 5,000 Hour Powertrain Warranty	$ 1,820.00
4.19.22	5 Year / 3,000 Hour Powertrain + Hydraulics + Technology Warranty	$ 1,130.00
4.19.23	5 Year / 4,000 Hour Powertrain + Hydraulics + Technology Warranty	$ 2,020.00
4.19.24	5Year / 5,000 Hour Powertrain + Hydraulics + Technology Warranty	$ 3,150.00
4.19.25	5 Year - 3,000 Hour Premier Warranty	$ 1,800.00
4.19.26	5 Year - 4,000 Hour Premier Warranty	$ 3,240.00
4.19.27	5 Year - 5,000 Hour Premier Warranty	$ 5,050.00
4.19.28	6 Year / 3,000 Hour Powertrain Warranty	$ 740.00
4.19.29	6 Year / 4,000 Hour Powertrain Warranty	$ 1,320.00
4.19.30	6 Year / 5,000 Hour Powertrain Warranty	$ 2,040.00
4.19.31	6 Year / 3,000 Hour Powertrain + Hydraulics + Technology Warranty	$ 1,280.00
4.19.32	6 Year / 4,000 Hour Powertrain + Hydraulics + Technology Warranty	$ 2,270.00
4.19.33	6Year / 5,000 Hour Powertrain + Hydraulics + Technology Warranty	$ 3,510.00
4.19.34	6 Year - 3,000 Hour Premier Warranty	$ 2,060.00
4.19.35	6 Year - 4,000 Hour Premier Warranty	$ 3,650.00
4.19.36	6 Year - 5,000 Hour Premier Warranty	$ 5,650.00
4.19.37	7 Year / 3,000 Hour Powertrain Warranty	$ 850.00
4.19.38	7 Year / 4,000 Hour Powertrain Warranty	$ 1,480.00
4.19.39	7 Year / 5,000 Hour Powertrain Warranty	$ 2,270.00
4.19.40	7 Year / 3,000 Hour Powertrain + Hydraulics + Technology Warranty	$ 1,470.00
4.19.41	7 Year / 4,000 Hour Powertrain + Hydraulics + Technology Warranty	$ 2,560.00
4.19.42	7Year / 5,000 Hour Powertrain + Hydraulics + Technology Warranty	$ 3,920.00
4.19.43	7 Year - 3,000 Hour Premier Warranty	$ 2,350.00
4.19.44	7 Year - 4,000 Hour Premier Warranty	$ 4,110.00
4.19.45	7 Year - 5,000 Hour Premier Warranty	$ 6,300.00
4.19.46	*does not include travel charges	
4.19.47	*see attached warranty statement	

4.20 NEW EQUIPMENT RENTAL PROGRAM

If rental programs are available on the new equipment offered, with the option to purchase, list the hourly/weekly/monthly rental rate. Indicate the percent of rental fee paid by the purchaser that will be applied to the purchase price. See Solicitation Special Terms & Conditions.

Hourly Rental Rate:	$22.00
Weekly Rental Rate:	$360.00
Monthly Rental Rate:	$1,080.00
Percent (%) of Rental Fee applied to purchase price:	100%

If the new rental equipment is purchased and finance
Charges are applicable for the actual rental term only.
State the actual interest rate here: _____Prime + 3%_____

4.21 VENDOR OWNED RENTAL RETURN OR DEMO EQUIPMENT PROGRAM

(See Solicitation Special Terms and Conditions.)
DEDUCT cost per Used Hour from the original Contract Price: $9.00

4.22 DELIVERY STARTING POINT - City, State, Zip: Nearest Ziegler Location

(See Special Terms and Conditions - no flat rate allowed.) **Price Per Loaded Mile:** $3.00

4.23 INSTALLATION - PER HOUR (Hourly Shop Rate):

Installation services may be requested on an "as needed" basis - see special terms and conditions.) $138.00

4.24 PRICE FOR ADDITIONAL MANUALS (1 of each included at no cost, per specs)

ADDITIONAL SERVICE MANUAL		
	Digital	$ 50.00
	Paper	$ 950.00
ADDITIONAL PARTS MANUAL		
	Digital	$ 50.00
	Paper	$ 50.00
PRICE FOR ADDITIONAL OPERATIONS MANUAL		
	Digital	$ 50.00
	Paper	$ 50.00

4.25 DISCOUNT OFF LIST PRICE FOR RELATED PARTS & ACCESSORIES %

(See Special Terms and Conditions)

T-631
Tractors: Skid Steers Attachments
 # 727-1019

Skid Steer / Compact Track Loaders

FIXED PRICING
(BASE UNIT INFORMATION)
Specification 3.0

October, 2019

Vendor Name:	**Ziegler Inc.**
Contact Person:	**Cory Dalbec, Chris Rice**
Street Address:	**901 West 94th Street**
P.O. Box:	
City, State, Zip	**Bloomington, MN 55420**
Phone #:	**952.888.4121**
Toll Free #:	**800.352.2812**
Email Address:	**cory.dalbec@zieglercat.com, chris.rice@zieglercat.com**
Website:	www.zieglercat.com

Spec #	Information Requested	Answer
3.1	**MAKE AND MODEL**	Caterpillar 249D3
	Engine Type and SAE net HP	Cat C2.2 CRDI 65.8 HP
	Tier	Tier 4 Final
	Length w/o attachments	99.3 in
	Height with operator cab	80.3 in
	Ground clearance	7.6 in
	Maximum height to bucket hinge pin	118.2 in
	Breakout force	3,907 lbs.
	Reach at maximum height	28.6 in
	Dump angle at maximum height	48.0 degrees
	Dump height with standard bucket	88.7 in.
	Front clearance circle with standard bucket	81.1 in
	Rear clearance circle	57.4 in
	Tipping load - SAE rated	4,970 lbs
	Rated operating capacity - SAE	2,700 lbs
	Standard bucket capacity - SAE heaped rating	.57 cu yd
	Operating weight - SAE rated	7,831 lbs
	Travel speed	1 speed - 5.0 mph/2 speed- 7.6 mph
	Fuel tank capacity	15.1 gallons
	Cold weather starting assist	Glow Plugs
	Battery CCA	850
	Alternator size - amps	80
	Transmission type	Hydrostatic Transmission
	Tire / Track size / width	TRACK, RUBBER, 15.7 IN (400MM) BAR TREAD
	Final drive chains and drive method	Direct sprocket to track drive
	Final drive chain adjustment / maintenance	Not required
	Gauges / instrumentation	Gauges: fuel level, hour meter Instrumentation: Engine coolant temperature, engine oil pressure, hydraulic oil temperature
	Pump type - GPM and PSI	Piston/18.0 GPM/3336 PSI
	Control valves	Hydraulic 3 section
	Hydraulic oil cooler	Included - air to oil
	Drive controls	Electro/Hydraulic - hand controls
	Lift and tilt controls	Electro/Hydraulic - hand controls
	Engine speed control	Both foot and hand control
	Work lights - front	Included 2 each
	Work lights - rear	Included 2 each
	Warranty	2 years / unlimited hours full machine
	BASE UNIT PRICE:	$ 48,620.00

SKID / COMPACT TRACK LOADER
OPTIONS - FIXED PRICING
SPECIFICATION 4.0

Spec #	Description	Price
	Price for base unit:	$ 48,620.00
4.1	**Skid/Compact Track Loader Options:** Use this section to offer additional skid/track loader options such as hand controls, gauges, heater, enclosed cab etc.. These options should be for skid steer power unit and not attachments.	
4.1.1	PRESSURIZED CAB, HEATER/DEFROSTER & DOOR	$ (1,430.00)
4.1.2	PRESSURIZED CAB, HEATER/DEFROSTER, AIR CONDITIONING & DOOR	INCLUDED
4.1.3	OPEN ROPS	$ (3,110.00)
4.1.4	AIR SUSPENSION SEAT-VINYL	$ (20.00)
4.1.5	AIR SUSPENSION SEAT-CLOTH	INCLUDED
4.1.6	PROPORTIONAL WORK TOOL CONTROL	INCLUDED
4.1.7	DUAL/SINGLE IDLER	INCLUDED
4.1.8	12.6" BLOCK RUBBER TRACKS	INCLUDED
4.1.9	15.7" BAR RUBBER TRACKS	$ 360.00
4.1.10	HAND & FOOT CONTROLS	$ 290.00
4.1.11	TWO SPEED CONTROL	INCLUDED
4.1.12	HYDRAULIC COUPLER	INCLUDED
4.1.13	FAN, COOLING, DEMAND	INCLUDED
4.1.14	FAN, COOLING, DEMAND, REVERSING	$ 590.00
4.1.15	RIDE CONTROL	$ 730.00
4.1.16	HIGH FLOW HYDRAULICS	$ 1,800.00
4.1.17	DOOR, CAB, POLYCARBONATE	$ 150.00
4.1.18	DOOR, CAB, GLASS	
4.1.19	RADIO AM-FM, CD, BLUETOOTH	INCLUDED
4.1.20	ADVANCED DISPLAY WITH BACKUP CAMERA	INCLUDED
4.1.21	PROPORTIONAL HYDRAULICS	$ (280.00)
4.1.22	DUAL SELF-LEVELING	INCLUDED
4.1.23	HEAVY DUTY BATTERY W/DISCONNECT	$ 90.00
4.1.24	LIGHTS LED	INCLUDED
4.1.25	HALOGEN LIGHTS	$ (200.00)
4.1.26	BEACON LIGHT	$ 160.00
4.1.27	REAR LIGHTS	$ -
4.1.28	REAR LIGHTS, STOP/TAIL/TURN	$ 550.00
4.1.29	ROADING LIGHTS	$ 690.00
4.1.30	SEAT BELT, 2"	INCLUDED
4.1.31	SEAT BELT, 3"	$ 200.00
4.1.32	RETURN TO DIG/ WORKTOOL POSITIONER	INCLUDED
4.1.33	COUNTERWEIGHT, MACHINE EXTERNAL	$ 720.00
4.1.34	MOUNTING, FIRE EXTINGUISHER	$ 290.00
4.1.35	SINGLE EYE LIFTING POINT	$ 1,200.00
4.1.36	LIFTING EYE 4 POINT	$ 140.00
4.1.37	FOPS, LEVEL 2	$ 2,700.00
4.1.38	HEATER, ENGINE COOLANT, 120V	$ 140.00
4.1.39	PRODUCT LINK, CELLULAR, PL243	INCLUDED
4.1.40	PRODUCT LINK, CELLULAR, PL641	$ 330.00
4.1.41	OIL, HYDRAULIC, COLD OPERATION	$ 470.00
4.1.42	PATTERN CHANGER	$ 750.00
4.1.43	CASE DEDICATED CONTROLS	$ 100.00
4.1.44	PAINT, CUSTOM	$ 1,460.00
4.1.45	CORRISION INHIBITOR - EquipCoat Spray / Clear Coat	$ 2,500.00

SKID / COMPACT TRACK LOADER
OPTIONS - FIXED PRICING
SPECIFICATION 4.0

Spec #	Description	Price
4.2	**Bucket Options:**	
	Use this section to offer bucket options such as standard, snow or combination buckets, etc..	
4.2.1	BUCKET-GENERAL PURPOSE, BOLT ON CUTTING EDGE 62"	$ 1,130.00
4.2.2	BUCKET-GENERAL PURPOSE, BOLT ON CUTTING EDGE 68"	$ 1,230.00
4.2.3	BUCKET-GENERAL PURPOSE, BOLT ON CUTTING EDGE 74"	$ 1,360.00
4.2.4	BUCKET-GENERAL PURPOSE, BOLT ON CUTTING EDGE 80"	$ 1,440.00
4.2.5	BUCKET-GENERAL PURPOSE, BOLT ON CUTTING EDGE 86"	$ 1,540.00
4.2.6	BUCKET-LIGHT MATERIAL, BOLT ON CUTTING EDGE 74"	$ 1,390.00
4.2.7	BUCKET-LIGHT MATERIAL, BOLT ON CUTTING EDGE 80"	$ 1,490.00
4.2.8	BUCKET-LIGHT MATERIAL, BOLT ON CUTTING EDGE 86" (1.1 CU. YD.)	$ 1,600.00
4.2.9	BUCKET-LIGHT MATERIAL, BOLT ON CUTTING EDGE 86" (1.4 CU. YD.)	$ 1,780.00
4.2.10	BUCKET-LIGHT MATERIAL, BOLT ON CUTTING EDGE 98"	$ 1,800.00
4.2.11	BUCKET-LIGHT MATERIAL, BOLT ON CUTTING EDGE 104"	$ 1,870.00
4.2.12	BUCKET-LOW PROFILE, BOLT ON CUTTING EDGE 56"	$ 740.00
4.2.13	BUCKET-LOW PROFILE, BOLT ON CUTTING EDGE 62"	$ 850.00
4.2.14	BUCKET-LOW PROFILE, BOLT ON CUTTING EDGE 68"	$ 950.00
4.2.15	BUCKET-LOW PROFILE, BOLT ON CUTTING EDGE 74"	$ 1,050.00
4.2.16	BUCKET-LOW PROFILE, BOLT ON CUTTING EDGE 80"	$ 1,160.00
4.2.17	BUCKET-MULTI-PURPOSE, BOLT ON CUTTING EDGE W/SG, 62"	$ 3,030.00
4.2.18	BUCKET-MULTI-PURPOSE, BOLT ON TEETH W/SG 62"	$ 3,030.00
4.2.19	BUCKET-MULTI-PURPOSE, W/BO EDGE 68" W/SG	$ 3,290.00
4.2.20	BUCKET-MULTI-PURPOSE, BOLT ON TEETH 68" W/SG	$ 3,290.00
4.2.21	BUCKET-MULTI-PURPOSE, BOLT ON CUTTING EDGE 74" W/SG	$ 3,540.00
4.2.22	BUCKET-MULTI-PURPOSE, BOLT ON TEETH 74" W/SG	$ 3,540.00
4.2.23	BUCKET-MULTI-PURPOSE, BOLT ON CUTTING EDGE 80" W/SG	$ 3,800.00
4.2.24	BUCKET-MULTI-PURPOSE, BOLT ON TEETH 80" W/SG	$ 3,800.00
4.2.25	BUCKET-MULTI-PURPOSE, BOLT ON CUTTING EDGE 86" W/SG	$ 4,050.00
4.2.26	BUCKET-MULTI-PURPOSE, BOLT ON TEETH 86" W/SG	$ 4,050.00
4.2.27	BUCKET-TOOTH, BOLT ON TEETH 62"	$ 1,180.00
4.2.28	BUCKET-TOOTH, BOLT ON TEETH 68"	$ 1,270.00
4.2.29	BUCKET-TOOTH, BOLT ON TEETH 74"	$ 1,360.00
4.2.30	BUCKET-TOOTH, BOLT ON TEETH 80"	$ 1,470.00
4.2.31	BUCKET-TOOTH, BOLT ON TEETH 86"	$ 1,560.00
4.2.32	BUCKET-UTILITY, BOLT ON CUTTING EDGE 62"	$ 1,030.00
4.2.33	BUCKET-UTILITY, BOLT ON CUTTING EDGE 68"	$ 1,130.00
4.2.34	BUCKET-UTILITY, BOLT ON CUTTING EDGE 74"	$ 1,230.00
4.3	**Overtire tracks:**	
	Use this section to offer overtire tracks.	
4.4	**Forks:**	
	Use this section to offer fork options, such as pallet forks, bale handler, etc..	
4.4.1	FORKS, 48" PALLET W/ CARRIAGE	$ 710.00
4.4.2	FORKS, 66" INDUSTRIAL GRAPPLE	$ 4,640.00
4.4.3	FORKS, 72" INDUSTRIAL GRAPPLE	$ 5,540.00
4.5	**Adaptor Plate:**	
	Use this section to offer adaptor plate options.	
	Universal Adapter Plate	$ 220.00
4.6	**Snowblower:**	
	Use this section to offer snowblower options.	
4.6.1	SR115 SNOW BLOWER, 60" WORKING WIDTH, 20-23 GPM HYDRAULIC FLOW	$ 6,990.00
4.6.2	SR118 SNOW BLOWER, 72" WORKING WIDTH, 20-23 GPM HYDRAULIC FLOW	$ 7,100.00
4.6.3	SR121 SNOW BLOWER, 85" WORKING WIDTH, 20-23 GPM HYDRAULIC FLOW	$ 7,200.00
4.6.4	SR318 SNOW BLOWER, 72" WORKING WIDTH, 31-33 GPM HYDRAULIC FLOW	$ 7,470.00
4.6.5	SR321 SNOW BLOWER, 85" WORKING WIDTH, 31-33 GPM HYDRAULIC FLOW	$ 7,950.00
4.7	**Sweeper:**	
	Use this section to offer sweeper options.	
4.7.1	BA118C, MANUAL ANGLE, 83" WIDTH	$ 5,970.00
4.7.2	BA118C, HYDRAULIC ANGLE, 83" WIDTH	$ 7,120.00
4.7.3	BP115C, PICKUP BROOM	$ 5,530.00
4.7.4	BP118C, PICKUP BROOM	$ 5,940.00
4.7.5	BU115, UTILITY BROOM	$ 3,770.00
4.7.6	BU118, UTILITY BROOM	$ 4,100.00
4.8	**Backhoe:**	
	Use this section to offer backhoe options.	
4.8.1	BACKHOE, BH150 (INCLUDES D SERIES MOUNTING BRACKET AND 24" BUCKET).	$ 14,830.00
4.8.2	BACKHOE, BH160 W/ AUXILIARY (INCLUDES D SERIES MOUNTING BRACKET AND 24" BUCKET).	$ 15,280.00
4.9	**Planer:**	
	Use this section to offer planer options.	
4.9.1	COLD PLANER, PC104B, 14" WORKING WIDTH, 16-21 GPM REQUIRED HYDRAULIC FLOW	$ 10,000.00
4.9.2	COLD PLANER, PC205B, 18" WORKING WIDTH, 21-31 GPM REQUIRED HYDRAULIC FLOW	$ 12,550.00
4.9.3	COLD PLANER, PC305B, 18" WORKING WIDTH, 26-33 GPM REQUIRED HYDRAULIC FLOW	$ 15,400.00
4.9.4	COLD PLANER, PC306B, 24" WORKING WIDTH, 26-33 GPM REQUIRED HYDRAULIC FLOW	$ 16,510.00
4.9.5	COLD PLANER, PC408B, 30" WORKING WIDTH, 40 GPM REQUIRED HYDRAULIC FLOW	$ 19,490.00
4.9.6	COLD PLANER, PC310B, 39" WORKING WIDTH, 33 GPM REQUIRED HYDRAULIC FLOW	$ 23,010.00
4.9.7	COLD PLANER, PC412, 47" WORKING WIDTH, 40 GPM REQUIRED HYDRAULIC FLOW	$ 25,560.00

SKID / COMPACT TRACK LOADER
OPTIONS - FIXED PRICING
SPECIFICATION 4.0

Spec #	Description	Price
4.10	**Snow Plow:**	
	Use this section to offer snow plow options.	
4.10.1	SNOW PLOW, 72"	$ 3,580.00
4.10.2	SNOW PLOW, 84"	$ 3,780.00
4.10.3	SNOW PLOW, 96"	$ 3,980.00
4.10.4	SNOW PLOW, 108"	$ 4,240.00
4.10.5	SNOW PLOW, 120"	$ 4,780.00
4.10.6	SNOW PUSH, SSL, STD DTY 8'	$ 2,520.00
4.10.7	SNOW PUSH, SSL, STD DTY 10'	$ 2,970.00
4.10.8	SNOW PUSH, SSL, STD DTY 12'	$ 3,530.00
4.11	**Hydraulic breaker:**	
	Use this section to offer hydraulic breaker options.	
4.11.1	H55S HAMMER WITH SSL MOUNTS	$ 7,850.00
4.11.2	H65S HAMMER WITH SSL MOUNTS	$ 9,230.00
4.11.3	B4 HAMMER, NON-SILENCED WITH SSL MOUNTS	$ 4,390.00
4.11.4	B4S HAMMER, SILENCED WITH SSL MOUNTS	$ 4,880.00
4.11.5	B6S HAMMER, SILENCED WITH SSL MOUNTS	$ 7,100.00
4.11.6	B6S HAMMER, NON-SILENCED WITH SSL MOUNTS	$ 6,390.00
4.11.7	B8S HAMMER, SILENCED WITH SSL MOUNTS	$ 9,430.00
4.11.8	B8 HAMMER, NON-SILENCED WITH SSL MOUNTS	$ 8,490.00
4.12	**Grapple:**	
	Use this section to offer grapple options.	
4.12.1	BUCKET, UTILITY GRAPPLE 68"	$ 2,430.00
4.12.2	BUCKET, UTILITY GRAPPLE 74"	$ 2,530.00
4.12.3	BUCKET, INDUSTRIAL GRAPPLE 62"	$ 3,590.00
4.12.4	BUCKET, INDUSTRIAL GRAPPLE 68"	$ 3,760.00
4.12.5	BUCKET, INDUSTRIAL GRAPPLE 74"	$ 4,210.00
4.12.6	BUCKET, INDUSTRIAL GRAPPLE 80"	$ 4,640.00
4.12.7	GRAPPLE RAKE 72"	$ 3,140.00
4.12.8	GRAPPLE RAKE 84"	$ 3,510.00
4.13	**Landscape:**	
	Use this section to offer landscape options.	
4.13.1	BRUSHCUTTER, BR160, 60"	$ 4,700.00
4.13.2	BRUSHCUTTER, BR166, 66"	$ 4,910.00
4.13.3	BRUSHCUTTER, BR172, 72"	$ 5,130.00
4.13.4	BRUSHCUTTER, BR272, 72" HF	$ 5,350.00
4.13.5	BRUSHCUTTER, BR378, 78" HF,XPS	$ 6,440.00
4.13.6	BRUSHCUTTER, BRX118 72"	$ 11,850.00
4.13.7	BRUSHCUTTER, BRX318 72", HF, XPS	$ 12,170.00
4.13.8	BRUSHCUTTER, BRX418	$ 12,170.00
4.13.9	LANDSCAPE RAKE, LR15B	$ 5,910.00
4.13.10	LANDSCAPE RAKE, LR18B	$ 6,330.00
4.13.11	LANDSCAPE TILLER, LT13B	$ 4,180.00
4.13.12	LANDSCAPE TILLER, LT18B	$ 4,740.00
4.13.13	MULCHER, HM112C, 49", 16-18 GPM REQUIRED HYDRAULIC FLOW	$ 19,330.00
4.13.14	MULCHER, HM115C, 58", 20-23 GPM REQUIRED HYDRAULIC FLOW	$ 20,330.00
4.13.15	MULCHER, HM215C, 58", 25-31 GPM REQUIRED HYDRAULIC FLOW	$ 21,080.00
4.13.16	MULCHER, HM315C, 58", 31-33 GPM REQUIRED HYDRAULIC FLOW	$ 27,830.00
4.13.17	MULCHER, HM415C, 58.6", 36-41 GPM REQUIRED HYDRAULIC FLOW	$ 30,300.00
4.13.18	MULCHER, HM418C, 67.2", 40-41 GPM REQUIRED HYDRAULIC FLOW	$ 32,230.00
4.13.19	POWER BOX RAKE-HYDRAULIC,PR172	$ 8,620.00
4.13.20	POWER BOX RAKE-HYDRAULIC,PR184	$ 9,120.00
4.13.21	POWER BOX RAKE-HYDRAULIC,PR190	$ 9,830.00
4.13.22	POWER BOX RAKE-MANUAL, PR172	$ 7,910.00
4.13.23	POWER BOX RAKE-MANUAL, PR184	$ 8,190.00
4.13.24	STUMP GRINDER, SG16B	$ 6,370.00
4.13.25	STUMP GRINDER, SG18B	$ 7,370.00
4.13.26	TRENCHER, T6B, 36" BOOM LENGTH	$ 4,610.00
4.13.27	TRENCHER, T9B, 48" BOOM LENGTH	$ 4,880.00
4.13.28	TRENCHER, T15B 6", 60" BOOM LENGTH	$ 6,250.00
4.14	**Grader:**	
	Use this section to offer grader options.	
4.14.1	BB121, 84", GRADING BOX, INCLUDES TECHNOLOGY AND INSTALLATION.	$ 15,890.00
4.14.2	BB124, 96", GRADING BOX, INCLUDES TECHNOLOGY AND INSTALLATION.	$ 16,200.00
4.14.3	BLADE, DOZER, 6-WAY, 79"	$ 5,070.00
4.14.4	BLADE, DOZER, 6-WAY, 92"	$ 5,570.00
4.15	**Auger:**	
	Use this section to offer auger options.	
4.15.1	AUGER, A14B	$ 1,900.00
4.15.2	AUGER, A19B	$ 2,250.00
4.15.3	AUGER, A26B, HF	$ 3,620.00
4.15.4	BIT, AUGER 6"	$ 290.00
4.15.5	BIT, AUGER 9"	$ 380.00
4.15.6	BIT, AUGER 12"	$ 480.00
4.15.7	BIT, AUGER 15" STANDARD	$ 580.00
4.15.8	BIT, AUGER 18"	$ 670.00
4.15.9	BIT, AUGER 24"	$ 860.00
4.15.10	BIT, AUGER 30"	$ 1,050.00
4.15.11	BIT, AUGER 36"	$ 1,230.00
4.15.12	BIT, AUGER 6" INDUSTRIAL	$ 400.00
4.15.13	BIT, AUGER 9" INDUSTRIAL	$ 490.00
4.15.14	BIT, AUGER 12" INDUSTRIAL	$ 580.00
4.15.15	BIT, AUGER 16" INDUSTRIAL	$ 700.00
4.15.16	BIT, AUGER 18" INDUSTRIAL	$ 770.00
4.15.17	BIT, AUGER 24" INDUSTRIAL	$ 1,130.00
4.15.18	TREE BIT, AUGER 24"	$ 760.00
4.15.19	TREE BIT, AUGER 36"	$ 1,190.00
4.15.20	ADAPTER, AUGER - HEX TO ROUND	$ 140.00
4.15.21	ADAPTER, AUGER - ROUND TO HEX	$ 120.00
4.15.22	EXTENSION, TELESCOPING 3'	$ 280.00
4.15.23	EXTENSION, TELESCOPING 6'	$ 470.00
4.15.24	EXTENSION, AUGER 12"	$ 120.00
4.15.25	EXTENSION, AUGER 24"	$ 170.00

SKID / COMPACT TRACK LOADER
OPTIONS - FIXED PRICING
SPECIFICATION 4.0

Spec #	Description	Price
4.16	**Wheel saw:**	
	Use this section to offer wheel saw options.	
4.16.1	WHEEL SAW, SW345B, 3"	$ 19,340.00
4.16.2	WHEEL SAW, SW360B, 3"	$ 21,910.00
4.16.3	WHEEL SAW, SW360B, 6"	$ 22,270.00
4.16.4	WHEEL SAW, SW360B, 8"	$ 23,320.00
4.16.5	WHEEL SAW, SW460B, 3"	$ 22,270.00
4.16.6	WHEEL SAW, SW460, 6"	$ 22,940.00
4.16.7	WHEEL SAW, SW460, 8"	$ 23,320.00
4.16.8	WHEEL SAW, SW380B, 10"	$ 30,810.00
4.17	**Vibratory roller:**	
	Use this section to offer vibratory roller options.	
4.17.1	CV16B, VIBRATORY COMPACTOR	$ 9,470.00
4.17.2	CV18B, VIBRATORY COMPACTOR	$ 10,150.00
4.18	**Other:**	
	Use this section to offer any other option not already covered.	
4.18.1	S305, SSL SHEARS - 9.4" JAW OPENING	$ 23,510.00
4.18.2	MATERIAL HANDLING ARM, 84", 2,000 LB. CAPACITY	$ 1,320.00
4.18.3	MB200, MIXING BUCKET	$ 5,510.00
4.18.4	MB250, MIXING BUCKET	$ 5,770.00
4.19	**EXTENDED WARRANTY OPTIONS**	
	Use this section to offer performance/warranty options, number these items starting with 20.1, 20.2, 20.3, etc. **(Specify years, miles or hours extended term covers.)**	
4.19.1	3 Year / 3,000 Hour Powertrain Warranty	$ 740.00
4.19.2	3 Year / 4,000 Hour Powertrain Warranty	$ 860.00
4.19.3	3 Year / 5,000 Hour Powertrain Warranty	$ 990.00
4.19.4	3 Year / 3,000 Hour Powertrain + Hydraulics + Technology Warranty	$ 1,300.00
4.19.5	3 Year / 4,000 Hour Powertrain + Hydraulics + Technology Warranty	$ 1,510.00
4.19.6	3 Year / 5,000 Hour Powertrain + Hydraulics + Technology Warranty	$ 1,750.00
4.19.7	3 Year - 3,000 Hour Premier Warranty	$ 2,500.00
4.19.8	3 Year - 4,000 Hour Premier Warranty	$ 2,910.00
4.19.9	3 Year - 5,000 Hour Premier Warranty	$ 3,360.00
4.19.10	4 Year / 3,000 Hour Powertrain Warranty	$ 860.00
4.19.11	4 Year / 4,000 Hour Powertrain Warranty	$ 1,430.00
4.19.12	4 Year / 5,000 Hour Powertrain Warranty	$ 1,620.00
4.19.13	4 Year / 3,000 Hour Powertrain + Hydraulics + Technology Warranty	$ 1,510.00
4.19.14	4 Year / 4,000 Hour Powertrain + Hydraulics + Technology Warranty	$ 2,510.00
4.19.15	4 Year / 5,000 Hour Powertrain + Hydraulics + Technology Warranty	$ 2,850.00
4.19.16	4 Year - 3,000 Hour Premier Warranty	$ 2,900.00
4.19.17	4 Year - 4,000 Hour Premier Warranty	$ 4,840.00
4.19.18	4 Year - 5,000 Hour Premier Warranty	$ 5,490.00
4.19.19	5 Year / 3,000 Hour Powertrain Warranty	$ 990.00
4.19.20	5 Year / 4,000 Hour Powertrain Warranty	$ 1,620.00
4.19.21	5 Year / 5,000 Hour Powertrain Warranty	$ 2,520.00
4.19.22	5 Year / 3,000 Hour Powertrain + Hydraulics + Technology Warranty	$ 1,740.00
4.19.23	5 Year / 4,000 Hour Powertrain + Hydraulics + Technology Warranty	$ 2,840.00
4.19.24	5Year / 5,000 Hour Powertrain + Hydraulics + Technology Warranty	$ 4,440.00
4.19.25	5 Year - 3,000 Hour Premier Warranty	$ 3,340.00
4.19.26	5 Year - 4,000 Hour Premier Warranty	$ 5,470.00
4.19.27	5 Year - 5,000 Hour Premier Warranty	$ 8,540.00
4.19.46	*does not include travel charges	
4.19.47	*see attached warranty statement	

4.20 NEW EQUIPMENT RENTAL PROGRAM

If rental programs are available on the new equipment offered, with the option to purchase, list the hourly/weekly/monthly rental rate. Indicate the percent of rental fee paid by the purchaser that will be applied to the purchase price. See Solicitation Special Terms & Conditions.

Hourly Rental Rate:	$20.00
Weekly Rental Rate:	$330.00
Monthly Rental Rate:	$990.00
Percent (%) of Rental Fee applied to purchase price:	100%

If the new rental equipment is purchased and finance
Charges are applicable for the actual rental term only.
State the actual interest rate here: _____Prime + 3%_____

4.21 VENDOR OWNED RENTAL RETURN OR DEMO EQUIPMENT PROGRAM
(See Solicitation Special Terms and Conditions.)
DEDUCT cost per Used Hour from the original Contract Price: $9.00

4.22 DELIVERY STARTING POINT - City, State, Zip: Nearest Ziegler Location
(See Special Terms and Conditions - no flat rate allowed.) **Price Per Loaded Mile:** $3.00

4.23 INSTALLATION - PER HOUR (Hourly Shop Rate):
Installation services may be requested on an "as needed" basis - see special terms and conditions.) $138.00

4.24 PRICE FOR ADDITIONAL MANUALS (1 of each included at no cost, per specs)

ADDITIONAL SERVICE MANUAL		
	Digital	$ 50.00
	Paper	$ 950.00
ADDITIONAL PARTS MANUAL		
	Digital	$ 50.00
	Paper	$ 50.00
PRICE FOR ADDITIONAL OPERATIONS MANUAL		
	Digital	$ 50.00
	Paper	$ 50.00

4.25 DISCOUNT OFF LIST PRICE FOR RELATED PARTS & ACCESSORIES %
(See Special Terms and Conditions)

T-631
Tractors: Skid Steers Attachments
 # 727-1019

Skid Steer / Compact Track Loaders

FIXED PRICING
(BASE UNIT INFORMATION)
Specification 3.0

October, 2019

Vendor Name:	**Ziegler Inc.**
Contact Person:	**Cory Dalbec, Chris Rice**
Street Address:	**901 West 94th Street**
P.O. Box:	
City, State, Zip	**Bloomington, MN 55420**
Phone #:	**952.888.4121**
Toll Free #:	**800.352.2812**
Email Address:	**cory.dalbec@zieglercat.com, chris.rice@zieglercat.com**
Website:	www.zieglercat.com

Spec #	Information Requested	Answer
3.1	**MAKE AND MODEL**	Caterpillar 257D3
	Engine Type and SAE net HP	Cat C3.3B DIT 73.2 HP
	Tier	Tier 4 Final
	Length w/o attachments	108.9 in
	Height with operator cab	83.8 in
	Ground clearance	9.5 in
	Maximum height to bucket hinge pin	121.7 in
	Breakout force	4,965 lbs.
	Reach at maximum height	25.1 in
	Dump angle at maximum height	52 degrees
	Dump height with standard bucket	90.5 in.
	Front clearance circle with standard bucket	86.3 in
	Rear clearance circle	61.2 in
	Tipping load - SAE rated	5,145 lbs
	Rated operating capacity - SAE	2,770 lbs
	Standard bucket capacity - SAE heaped rating	.57 cu yd
	Operating weight - SAE rated	8,094 lbs
	Travel speed	1 speed - 6.3 mph/2 speed- 9.9 mph
	Fuel tank capacity	24.8 gallons
	Cold weather starting assist	Glow Plugs
	Battery CCA	850
	Alternator size - amps	80
	Transmission type	Hydrostatic Transmission
	Tire / Track size / width	15" rubber track
	Final drive chains and drive method	Direct sprocket to track drive
	Final drive chain adjustment / maintenance	Not required
	Gauges / instrumentation	Gauges: fuel level, hour meter Instrumentation: Engine coolant temperature, engine oil pressure, hydraulic oil temperature
	Pump type - GPM and PSI	Piston/20 GPM/3335 PSI
	Control valves	Hydraulic 3 section
	Hydraulic oil cooler	Included - air to oil
	Drive controls	Electro/Hydraulic - hand controls
	Lift and tilt controls	Electro/Hydraulic - hand controls
	Engine speed control	Both foot and hand control
	Work lights - front	Included 2 each
	Work lights - rear	Included 2 each
	Warranty	2 years / unlimited hours full machine
	BASE UNIT PRICE:	$ 60,040.00

SKID / COMPACT TRACK LOADER
OPTIONS - FIXED PRICING
SPECIFICATION 4.0

Spec #	Description	Price
	Price for base unit:	$ 60,040.00
4.1	**Skid/Compact Track Loader Options:** Use this section to offer additional skid/track loader options such as hand controls, gauges, heater, enclosed cab etc.. These options should be for skid steer power unit and not attachments.	
4.1.1	PRESSURIZED CAB, HEATER/DEFROSTER, AIR CONDITIONING & DOOR	INCLUDED
4.1.2	AIR SUSPENSION SEAT-CLOTH	INCLUDED
4.1.3	ELECTRIC WORK TOOL CONTROL	INCLUDED
4.1.4	TWO SPEED CONTROL	INCLUDED
4.1.5	HYDRAULIC COUPLER	INCLUDED
4.1.6	RIDE CONTROL	$ 1,200.00
4.1.7	HIGH FLOW HYDRAULICS w/DUAL SELF LEVEL	$ 3,700.00
4.1.8	DOOR, CAB, POLYCARBONATE	$ 300.00
4.1.9	RADIO AM-FM, CD, BLUETOOTH	INCLUDED
4.1.10	ADVANCED DISPLAY WITH BACKUP CAMERA	INCLUDED
4.1.11	PROPORTIONAL HYDRAULICS	INCLUDED
4.1.12	DUAL SELF-LEVELING	INCLUDED
4.1.13	HEAVY DUTY BATTERY W/DISCONNECT	$ 100.00
4.1.14	BEACON LIGHT	$ 160.00
4.1.15	RETURN TO DIG/ WORKTOOL POSITIONER	INCLUDED
4.1.16	COUNTERWEIGHT, MACHINE EXTERNAL	$ 770.00
4.1.17	SINGLE EYE LIFTING POINT	$ 1,200.00
4.1.18	ON DEMAND FAN	INCLUDED
4.1.19	REVERSING FAN	$ 620.00
4.1.20	15.7" RUBBER TRACK	INCLUDED
4.1.21	LIGHTS LED	INCLUDED
4.1.22	HALOGEN LIGHTS	$ (210.00)
4.1.23	REAR LIGHTS	INCLUDED
4.1.24	REAR LIGHTS, STOP/TAIL/TURN	$ 560.00
4.1.25	ROADING LIGHTS	$ 720.00
4.1.26	SEAT BELT, 2"	INCLUDED
4.1.27	SEAT BELT, 3"	$ 210.00
4.1.28	MOUNTING, FIRE EXTINGUISHER	$ 300.00
4.1.29	LIFTING EYE 4 POINT	$ 150.00
4.1.30	FOPS, LEVEL 2	$ 2,700.00
4.1.31	HEATER, ENGINE COOLANT, 120V	$ 150.00
4.1.32	PRODUCT LINK, CELLULAR, PL243	INCLUDED
4.1.33	PRODUCT LINK, CELLULAR, PL641	$ 350.00
4.1.34	OIL, HYDRAULIC, COLD OPERATION	$ 500.00
4.1.35	PATTERN CHANGER	$ 750.00
4.1.36	CASE DEDICATED CONTROLS	$ 100.00
4.1.37	PAINT, CUSTOM	$ 1,460.00
4.1.38	CORRISION INHIBITOR - EquipCoat Spray / Clear Coat	$ 2,500.00
4.2	**Bucket Options:** Use this section to offer bucket options such as standard, snow or combination buckets, etc..	
4.2.1	BUCKET-GENERAL PURPOSE, BOLT ON CUTTING EDGE 62"	$ 1,130.00
4.2.2	BUCKET-GENERAL PURPOSE, BOLT ON CUTTING EDGE 68"	$ 1,230.00
4.2.3	BUCKET-GENERAL PURPOSE, BOLT ON CUTTING EDGE 74"	$ 1,360.00
4.2.4	BUCKET-GENERAL PURPOSE, BOLT ON CUTTING EDGE 80"	$ 1,440.00
4.2.5	BUCKET-GENERAL PURPOSE, BOLT ON CUTTING EDGE 86"	$ 1,540.00
4.2.6	BUCKET-LIGHT MATERIAL, BOLT ON CUTTING EDGE 74"	$ 1,390.00
4.2.7	BUCKET-LIGHT MATERIAL, BOLT ON CUTTING EDGE 80"	$ 1,490.00
4.2.8	BUCKET-LIGHT MATERIAL, BOLT ON CUTTING EDGE 86" (1.1 CU. YD.)	$ 1,600.00
4.2.9	BUCKET-LIGHT MATERIAL, BOLT ON CUTTING EDGE 86" (1.4 CU. YD.)	$ 1,780.00
4.2.10	BUCKET-LIGHT MATERIAL, BOLT ON CUTTING EDGE 98"	$ 1,800.00
4.2.11	BUCKET-LIGHT MATERIAL, BOLT ON CUTTING EDGE 104"	$ 1,870.00
4.2.12	BUCKET-LOW PROFILE, BOLT ON CUTTING EDGE 56"	$ 740.00
4.2.13	BUCKET-LOW PROFILE, BOLT ON CUTTING EDGE 62"	$ 850.00
4.2.14	BUCKET-LOW PROFILE, BOLT ON CUTTING EDGE 68"	$ 950.00
4.2.15	BUCKET-LOW PROFILE, BOLT ON CUTTING EDGE 74"	$ 1,050.00
4.2.16	BUCKET-LOW PROFILE, BOLT ON CUTTING EDGE 80"	$ 1,160.00
4.2.17	BUCKET-MULTI-PURPOSE, BOLT ON CUTTING EDGE W/SG, 62"	$ 3,030.00
4.2.18	BUCKET-MULTI-PURPOSE, BOLT ON TEETH W/SG 62"	$ 3,030.00
4.2.19	BUCKET-MULTI-PURPOSE, W/BO EDGE 68" W/SG	$ 3,290.00
4.2.20	BUCKET-MULTI-PURPOSE, BOLT ON TEETH 68" W/SG	$ 3,290.00
4.2.21	BUCKET-MULTI-PURPOSE, BOLT ON CUTTING EDGE 74" W/SG	$ 3,540.00
4.2.22	BUCKET-MULTI-PURPOSE, BOLT ON TEETH 74" W/SG	$ 3,540.00
4.2.23	BUCKET-MULTI-PURPOSE, BOLT ON CUTTING EDGE 80" W/SG	$ 3,800.00
4.2.24	BUCKET-MULTI-PURPOSE, BOLT ON TEETH 80" W/SG	$ 3,800.00
4.2.25	BUCKET-MULTI-PURPOSE, BOLT ON CUTTING EDGE 86" W/SG	$ 4,050.00
4.2.26	BUCKET-MULTI-PURPOSE, BOLT ON TEETH 86" W/SG	$ 4,050.00
4.2.27	BUCKET-TOOTH, BOLT ON TEETH 62"	$ 1,180.00
4.2.28	BUCKET-TOOTH, BOLT ON TEETH 68"	$ 1,270.00
4.2.29	BUCKET-TOOTH, BOLT ON TEETH 74"	$ 1,360.00
4.2.30	BUCKET-TOOTH, BOLT ON TEETH 80"	$ 1,470.00
4.2.31	BUCKET-TOOTH, BOLT ON TEETH 86"	$ 1,560.00
4.2.32	BUCKET-UTILITY, BOLT ON CUTTING EDGE 62"	$ 1,030.00
4.2.33	BUCKET-UTILITY, BOLT ON CUTTING EDGE 68"	$ 1,130.00
4.2.34	BUCKET-UTILITY, BOLT ON CUTTING EDGE 74"	$ 1,230.00

SKID / COMPACT TRACK LOADER
OPTIONS - FIXED PRICING
SPECIFICATION 4.0

Spec #	Description	Price
4.3	**Overtire tracks:**	
	Use this section to offer overtire tracks.	
4.4	**Forks:**	
	Use this section to offer fork options, such as pallet forks, bale handler, etc..	
4.4.1	FORKS, 48" PALLET W/ CARRIAGE	$ 710.00
4.4.2	FORKS, 66" INDUSTRIAL GRAPPLE	$ 4,640.00
4.4.3	FORKS, 72" INDUSTRIAL GRAPPLE	$ 5,540.00
4.5	**Adaptor Plate:**	
	Use this section to offer adaptor plate options.	
	Universal Adapter Plate	$ 220.00
4.6	**Snowblower:**	
	Use this section to offer snowblower options.	
4.6.1	SR115 SNOW BLOWER, 60" WORKING WIDTH, 20-23 GPM HYDRAULIC FLOW	$ 6,990.00
4.6.2	SR118 SNOW BLOWER, 72" WORKING WIDTH, 20-23 GPM HYDRAULIC FLOW	$ 7,100.00
4.6.3	SR121 SNOW BLOWER, 85" WORKING WIDTH, 20-23 GPM HYDRAULIC FLOW	$ 7,200.00
4.6.4	SR318 SNOW BLOWER, 72" WORKING WIDTH, 31-33 GPM HYDRAULIC FLOW	$ 7,470.00
4.6.5	SR321 SNOW BLOWER, 85" WORKING WIDTH, 31-33 GPM HYDRAULIC FLOW	$ 7,950.00
4.7	**Sweeper:**	
	Use this section to offer sweeper options.	
4.7.1	BA118C, MANUAL ANGLE, 83" WIDTH	$ 5,970.00
4.7.2	BA118C, HYDRAULIC ANGLE, 83" WIDTH	$ 7,120.00
4.7.3	BP115C, PICKUP BROOM	$ 5,530.00
4.7.4	BP118C, PICKUP BROOM	$ 5,940.00
4.7.5	BU115, UTILITY BROOM	$ 3,770.00
4.7.6	BU118, UTILITY BROOM	$ 4,100.00
4.8	**Backhoe:**	
	Use this section to offer backhoe options.	
4.8.1	BACKHOE, BH150 (INCLUDES D SERIES MOUNTING BRACKET AND 24" BUCKET).	$ 14,830.00
4.8.2	BACKHOE, BH160 W/ AUXILIARY (INCLUDES D SERIES MOUNTING BRACKET AND 24" BUCKET).	$ 15,280.00
4.9	**Planer:**	
	Use this section to offer planer options.	
4.9.1	COLD PLANER, PC104B, 14" WORKING WIDTH, 16-21 GPM REQUIRED HYDRAULIC FLOW	$ 10,000.00
4.9.2	COLD PLANER, PC205B, 18" WORKING WIDTH, 21-31 GPM REQUIRED HYDRAULIC FLOW	$ 12,550.00
4.9.3	COLD PLANER, PC305B, 18" WORKING WIDTH, 26-33 GPM REQUIRED HYDRAULIC FLOW	$ 15,400.00
4.9.4	COLD PLANER, PC306B, 24" WORKING WIDTH, 26-33 GPM REQUIRED HYDRAULIC FLOW	$ 16,510.00
4.9.5	COLD PLANER, PC408B, 30" WORKING WIDTH, 40 GPM REQUIRED HYDRAULIC FLOW	$ 19,490.00
4.9.6	COLD PLANER, PC310B, 39" WORKING WIDTH, 33 GPM REQUIRED HYDRAULIC FLOW	$ 23,010.00
4.9.7	COLD PLANER, PC412, 47" WORKING WIDTH, 40 GPM REQUIRED HYDRAULIC FLOW	$ 25,560.00
4.10	**Snow Plow:**	
	Use this section to offer snow plow options.	
4.10.1	SNOW PLOW, 72"	$ 3,580.00
4.10.2	SNOW PLOW, 84"	$ 3,780.00
4.10.3	SNOW PLOW, 96"	$ 3,980.00
4.10.4	SNOW PLOW, 108"	$ 4,240.00
4.10.5	SNOW PLOW, 120"	$ 4,780.00
4.10.6	SNOW PUSH, SSL, STD DTY 8'	$ 2,520.00
4.10.7	SNOW PUSH, SSL, STD DTY 10'	$ 2,970.00
4.10.8	SNOW PUSH, SSL, STD DTY 12'	$ 3,530.00
4.11	**Hydraulic breaker:**	
	Use this section to offer hydraulic breaker options.	
4.11.1	H55S HAMMER WITH SSL MOUNTS	$ 7,850.00
4.11.2	H65S HAMMER WITH SSL MOUNTS	$ 9,230.00
4.11.3	B4 HAMMER, NON-SILENCED WITH SSL MOUNTS	$ 4,390.00
4.11.4	B4S HAMMER, SILENCED WITH SSL MOUNTS	$ 4,880.00
4.11.5	B6S HAMMER, SILENCED WITH SSL MOUNTS	$ 7,100.00
4.11.6	B6S HAMMER, NON-SILENCED WITH SSL MOUNTS	$ 6,390.00
4.11.7	B8S HAMMER, SILENCED WITH SSL MOUNTS	$ 9,430.00
4.11.8	B8 HAMMER, NON-SILENCED WITH SSL MOUNTS	$ 8,490.00
4.12	**Grapple:**	
	Use this section to offer grapple options.	
4.12.1	BUCKET, UTILITY GRAPPLE 68"	$ 2,430.00
4.12.2	BUCKET, UTILITY GRAPPLE 74"	$ 2,530.00
4.12.3	BUCKET, INDUSTRIAL GRAPPLE 62"	$ 3,590.00
4.12.4	BUCKET, INDUSTRIAL GRAPPLE 68"	$ 3,760.00
4.12.5	BUCKET, INDUSTRIAL GRAPPLE 74"	$ 4,210.00
4.12.6	BUCKET, INDUSTRIAL GRAPPLE 80"	$ 4,640.00
4.12.7	GRAPPLE RAKE 72"	$ 3,140.00
4.12.8	GRAPPLE RAKE 84"	$ 3,510.00
4.13	**Landscape:**	
	Use this section to offer landscape options.	
4.13.1	BRUSHCUTTER, BR160, 60"	$ 4,700.00
4.13.2	BRUSHCUTTER, BR166, 66"	$ 4,910.00
4.13.3	BRUSHCUTTER, BR172, 72"	$ 5,130.00
4.13.4	BRUSHCUTTER, BR272, 72" HF	$ 5,350.00
4.13.5	BRUSHCUTTER, BR378, 78" HF,XPS	$ 6,440.00
4.13.6	BRUSHCUTTER, BRX118 72"	$ 11,850.00
4.13.7	BRUSHCUTTER, BRX318 72", HF, XPS	$ 12,170.00
4.13.8	BRUSHCUTTER, BRX418	$ 12,170.00
4.13.9	LANDSCAPE RAKE, LR15B	$ 5,910.00
4.13.10	LANDSCAPE RAKE, LR18B	$ 6,330.00
4.13.11	LANDSCAPE TILLER, LT13B	$ 4,180.00
4.13.12	LANDSCAPE TILLER, LT18B	$ 4,740.00
4.13.13	MULCHER, HM112C, 49", 16-18 GPM REQUIRED HYDRAULIC FLOW	$ 19,330.00
4.13.14	MULCHER, HM115C, 58", 20-23 GPM REQUIRED HYDRAULIC FLOW	$ 20,330.00
4.13.15	MULCHER, HM215C, 58", 25-31 GPM REQUIRED HYDRAULIC FLOW	$ 21,080.00
4.13.16	MULCHER, HM315C, 58", 31-33 GPM REQUIRED HYDRAULIC FLOW	$ 27,830.00
4.13.17	MULCHER, HM415C, 58.6", 36-41 GPM REQUIRED HYDRAULIC FLOW	$ 30,300.00
4.13.18	MULCHER, HM418C, 67.2", 40-41 GPM REQUIRED HYDRAULIC FLOW	$ 32,230.00
4.13.19	POWER BOX RAKE-HYDRAULIC,PR172	$ 8,620.00
4.13.20	POWER BOX RAKE-HYDRAULIC,PR184	$ 9,120.00
4.13.21	POWER BOX RAKE-HYDRAULIC,PR190	$ 9,830.00
4.13.22	POWER BOX RAKE-MANUAL, PR172	$ 7,910.00
4.13.23	POWER BOX RAKE-MANUAL, PR184	$ 8,190.00
4.13.24	STUMP GRINDER, SG16B	$ 6,370.00
4.13.25	STUMP GRINDER, SG18B	$ 7,370.00
4.13.26	TRENCHER, T6B, 36" BOOM LENGTH	$ 4,610.00
4.13.27	TRENCHER, T9B, 48" BOOM LENGTH	$ 4,880.00
4.13.28	TRENCHER, T15B 6", 60" BOOM LENGTH	$ 6,250.00

SKID / COMPACT TRACK LOADER
OPTIONS - FIXED PRICING
SPECIFICATION 4.0

Spec #	Description	Price
4.14	**Grader:**	
	Use this section to offer grader options.	
4.14.1	BB121, 84", GRADING BOX, INCLUDES TECHNOLOGY AND INSTALLATION.	$ 15,890.00
4.14.2	BB124, 96", GRADING BOX, INCLUDES TECHNOLOGY AND INSTALLATION.	$ 16,200.00
4.14.3	BLADE, DOZER, 6-WAY, 79"	$ 5,070.00
4.14.4	BLADE, DOZER, 6-WAY, 92"	$ 5,570.00
4.15	**Auger:**	
	Use this section to offer auger options.	
4.15.1	AUGER, A14B	$ 1,900.00
4.15.2	AUGER, A19B	$ 2,250.00
4.15.3	AUGER, A26B, HF	$ 3,620.00
4.15.4	BIT, AUGER 6"	$ 290.00
4.15.5	BIT, AUGER 9"	$ 380.00
4.15.6	BIT, AUGER 12"	$ 480.00
4.15.7	BIT, AUGER 15" STANDARD	$ 580.00
4.15.8	BIT, AUGER 18"	$ 670.00
4.15.9	BIT, AUGER 24"	$ 860.00
4.15.10	BIT, AUGER 30"	$ 1,050.00
4.15.11	BIT, AUGER 36"	$ 1,230.00
4.15.12	BIT, AUGER 6" INDUSTRIAL	$ 400.00
4.15.13	BIT, AUGER 9" INDUSTRIAL	$ 490.00
4.15.14	BIT, AUGER 12" INDUSTRIAL	$ 580.00
4.15.15	BIT, AUGER 16" INDUSTRIAL	$ 700.00
4.15.16	BIT, AUGER 18" INDUSTRIAL	$ 770.00
4.15.17	BIT, AUGER 24" INDUSTRIAL	$ 1,130.00
4.15.18	TREE BIT, AUGER 24"	$ 760.00
4.15.19	TREE BIT, AUGER 36"	$ 1,190.00
4.15.20	ADAPTER, AUGER - HEX TO ROUND	$ 140.00
4.15.21	ADAPTER, AUGER - ROUND TO HEX	$ 120.00
4.15.22	EXTENSION, TELESCOPING 3'	$ 280.00
4.15.23	EXTENSION, TELESCOPING 6'	$ 470.00
4.15.24	EXTENSION, AUGER 12"	$ 120.00
4.15.25	EXTENSION, AUGER 24"	$ 170.00
4.16	**Wheel saw:**	
	Use this section to offer wheel saw options.	
4.16.1	WHEEL SAW, SW345B, 3"	$ 19,340.00
4.16.2	WHEEL SAW, SW360B, 3"	$ 21,910.00
4.16.3	WHEEL SAW, SW360B, 6"	$ 22,270.00
4.16.4	WHEEL SAW, SW360B, 8"	$ 23,320.00
4.16.5	WHEEL SAW, SW460B, 3"	$ 22,270.00
4.16.6	WHEEL SAW, SW460, 6"	$ 22,940.00
4.16.7	WHEEL SAW, SW460, 8"	$ 23,320.00
4.16.8	WHEEL SAW, SW380B, 10"	$ 30,810.00
4.17	**Vibratory roller:**	
	Use this section to offer vibratory roller options.	
4.17.1	CV16B, VIBRATORY COMPACTOR	$ 9,470.00
4.17.2	CV18B, VIBRATORY COMPACTOR	$ 10,150.00
4.18	**Other:**	
	Use this section to offer any other option not already covered.	
4.18.1	S305, SSL SHEARS - 9.4" JAW OPENING	$ 23,510.00
4.18.2	MATERIAL HANDLING ARM, 84", 2,000 LB. CAPACITY	$ 1,320.00
4.18.3	MB200, MIXING BUCKET	$ 5,510.00
4.18.4	MB250, MIXING BUCKET	$ 5,770.00

SKID / COMPACT TRACK LOADER
OPTIONS - FIXED PRICING
SPECIFICATION 4.0

Spec #	Description	Price
4.19	**EXTENDED WARRANTY OPTIONS**	
	Use this section to offer performance/warranty options, number these items starting with 20.1, 20.2, 20.3, etc. **(Specify years, miles or hours extended term covers.)**	
4.19.1	3 Year / 3,000 Hour Powertrain Warranty	$ 850.00
4.19.2	3 Year / 4,000 Hour Powertrain Warranty	$ 990.00
4.19.3	3 Year / 5,000 Hour Powertrain Warranty	$ 1,150.00
4.19.4	3 Year / 3,000 Hour Powertrain + Hydraulics + Technology Warranty	$ 1,470.00
4.19.5	3 Year / 4,000 Hour Powertrain + Hydraulics + Technology Warranty	$ 1,710.00
4.19.6	3 Year / 5,000 Hour Powertrain + Hydraulics + Technology Warranty	$ 1,970.00
4.19.7	3 Year - 3,000 Hour Premier Warranty	$ 2,830.00
4.19.8	3 Year - 4,000 Hour Premier Warranty	$ 3,290.00
4.19.9	3 Year - 5,000 Hour Premier Warranty	$ 3,810.00
4.19.10	4 Year / 3,000 Hour Powertrain Warranty	$ 980.00
4.19.11	4 Year / 4,000 Hour Powertrain Warranty	$ 1,640.00
4.19.12	4 Year / 5,000 Hour Powertrain Warranty	$ 1,860.00
4.19.13	4 Year / 3,000 Hour Powertrain + Hydraulics + Technology Warranty	$ 1,700.00
4.19.14	4 Year / 4,000 Hour Powertrain + Hydraulics + Technology Warranty	$ 2,840.00
4.19.15	4 Year / 5,000 Hour Powertrain + Hydraulics + Technology Warranty	$ 3,220.00
4.19.16	4 Year - 3,000 Hour Premier Warranty	$ 3,280.00
4.19.17	4 Year - 4,000 Hour Premier Warranty	$ 5,480.00
4.19.18	4 Year - 5,000 Hour Premier Warranty	$ 6,220.00
4.19.19	5 Year / 3,000 Hour Powertrain Warranty	$ 1,140.00
4.19.20	5 Year / 4,000 Hour Powertrain Warranty	$ 1,860.00
4.19.21	5 Year / 5,000 Hour Powertrain Warranty	$ 2,900.00
4.19.22	5 Year / 3,000 Hour Powertrain + Hydraulics + Technology Warranty	$ 1,960.00
4.19.23	5 Year / 4,000 Hour Powertrain + Hydraulics + Technology Warranty	$ 3,210.00
4.19.24	5Year / 5,000 Hour Powertrain + Hydraulics + Technology Warranty	$ 5,010.00
4.19.25	5 Year - 3,000 Hour Premier Warranty	$ 3,790.00
4.19.26	5 Year - 4,000 Hour Premier Warranty	$ 6,200.00
4.19.27	5 Year - 5,000 Hour Premier Warranty	$ 9,670.00
4.19.46	*does not include travel charges	
4.19.47	*see attached warranty statement	

4.20 NEW EQUIPMENT RENTAL PROGRAM

If rental programs are available on the new equipment offered, with the option to purchase, list the hourly/weekly/monthly rental rate. Indicate the percent of rental fee paid by the purchaser that will be applied to the purchase price. See Solicitation Special Terms & Conditions.

Hourly Rental Rate:	$24.00
Weekly Rental Rate:	$800.00
Monthly Rental Rate:	$2,400.00
Percent (%) of Rental Fee applied to purchase price:	100%

If the new rental equipment is purchased and finance

Charges are applicable for the actual rental term only.

State the actual interest rate here: Prime + 3%

4.21 VENDOR OWNED RENTAL RETURN OR DEMO EQUIPMENT PROGRAM

(See Solicitation Special Terms and Conditions.)

DEDUCT cost per Used Hour from the original Contract Price: $15.00

4.22 DELIVERY STARTING POINT - City, State, Zip: Nearest Ziegler Location

(See Special Terms and Conditions - no flat rate allowed.) **Price Per Loaded Mile:** $3.00

4.23 INSTALLATION - PER HOUR (Hourly Shop Rate):

Installation services may be requested on an "as needed" basis - see special terms and conditions.) $138.00

4.24 PRICE FOR ADDITIONAL MANUALS (1 of each included at no cost, per specs)

ADDITIONAL SERVICE MANUAL		
	Digital	$ 50.00
	Paper	$ 950.00
ADDITIONAL PARTS MANUAL		
	Digital	$ 50.00
	Paper	$ 50.00
PRICE FOR ADDITIONAL OPERATIONS MANUAL		
	Digital	$ 50.00
	Paper	$ 50.00

4.25 DISCOUNT OFF LIST PRICE FOR RELATED PARTS & ACCESSORIES %

(See Special Terms and Conditions)

T-631
Tractors: Skid Steers Attachments
 # 727-1019

Skid Steer / Compact Track Loaders

FIXED PRICING
(BASE UNIT INFORMATION)
Specification 3.0

October, 2019

Vendor Name:	**Ziegler Inc.**
Contact Person:	**Cory Dalbec, Chris Rice**
Street Address:	**901 West 94th Street**
P.O. Box:	
City, State, Zip	**Bloomington, MN 55420**
Phone #:	**952.888.4121**
Toll Free #:	**800.352.2812**
Email Address:	**cory.dalbec@zieglercat.com, chris.rice@zieglercat.com**
Website:	www.zieglercat.com

Spec #	Information Requested	Answer
3.1	**MAKE AND MODEL**	Caterpillar 259D3
	Engine Type and SAE net HP	Cat C3.3B DIT 73.2 HP
	Tier	Tier 4 Final
	Length w/o attachments	108.9 in
	Height with operator cab	83.1 in
	Ground clearance	8.9 in
	Maximum height to bucket hinge pin	121. in
	Breakout force	4,965 lbs.
	Reach at maximum height	23.9 in
	Dump angle at maximum height	52 degrees
	Dump height with standard bucket	89.9 in.
	Front clearance circle with standard bucket	86 in
	Rear clearance circle	61.5 in
	Tipping load - SAE rated	5,745 lbs
	Rated operating capacity - SAE	3,060 lbs
	Standard bucket capacity - SAE heaped rating	.57 cu yd
	Operating weight - SAE rated	8,987 lbs
	Travel speed	1 speed - 5.9 mph/2 speed- 8.5 mph
	Fuel tank capacity	24.8 gallons
	Cold weather starting assist	Glow Plugs
	Battery CCA	850
	Alternator size - amps	80
	Transmission type	Hydrostatic Transmission
	Tire / Track size / width	TRACK, RUBBER, 15.7 IN (400MM) BAR TREAD
	Final drive chains and drive method	Direct sprocket to track drive
	Final drive chain adjustment / maintenance	Not required
	Gauges / instrumentation	Gauges: fuel level, hour meter Instrumentation: Engine coolant temperature, engine oil pressure, hydraulic oil temperature
	Pump type - GPM and PSI	Piston/20 GPM/3335 PSI
	Control valves	Hydraulic 3 section
	Hydraulic oil cooler	Included - air to oil
	Drive controls	Electro/Hydraulic - hand controls
	Lift and tilt controls	Electro/Hydraulic - hand controls
	Engine speed control	Both foot and hand control
	Work lights - front	Included 2 each
	Work lights - rear	Included 2 each
	Warranty	2 years / unlimited hours full machine
	BASE UNIT PRICE:	$ 54,680.00

SKID / COMPACT TRACK LOADER
OPTIONS - FIXED PRICING
SPECIFICATION 4.0

Spec #	Description	Price
	Price for base unit:	$ 54,680.00
4.1	**Skid/Compact Track Loader Options:** Use this section to offer additional skid/track loader options such as hand controls, gauges, heater, enclosed cab etc.. These options should be for skid steer power unit and not attachments.	
4.1.1	PRESSURIZED CAB, HEATER/DEFROSTER & DOOR	$ (1,430.00)
4.1.2	PRESSURIZED CAB, HEATER/DEFROSTER, AIR CONDITIONING & DOOR	INCLUDED
4.1.3	OPEN ROPS	$ (3,110.00)
4.1.4	AIR SUSPENSION SEAT-VINYL	$ (20.00)
4.1.5	AIR SUSPENSION SEAT-CLOTH	INCLUDED
4.1.6	PROPORTIONAL WORK TOOL CONTROL	INCLUDED
4.1.7	HAND & FOOT CONTROLS	$ 290.00
4.1.8	TWO SPEED CONTROL	INCLUDED
4.1.9	HYDRAULIC COUPLER	INCLUDED
4.1.10	FAN, COOLING, DEMAND	INCLUDED
4.1.11	FAN, COOLING, DEMAND, REVERSING	$ 590.00
4.1.12	RIDE CONTROL	$ 730.00
4.1.13	HIGH FLOW HYDRAULICS	$ 2,150.00
4.1.14	DOOR, CAB, POLYCARBONATE	$ 150.00
4.1.15	DOOR, CAB, GLASS	
4.1.16	RADIO AM-FM, CD, BLUETOOTH	INCLUDED
4.1.17	ADVANCED DISPLAY WITH BACKUP CAMERA	INCLUDED
4.1.18	PROPORTIONAL HYDRAULICS	$ (280.00)
4.1.19	DUAL SELF-LEVELING	INCLUDED
4.1.20	HEAVY DUTY BATTERY W/DISCONNECT	$ 90.00
4.1.21	LIGHTS LED	INCLUDED
4.1.22	HALOGEN LIGHTS	$ (200.00)
4.1.23	BEACON LIGHT	$ 160.00
4.1.24	REAR LIGHTS	$ -
4.1.25	REAR LIGHTS, STOP/TAIL/TURN	$ 550.00
4.1.26	ROADING LIGHTS	$ 690.00
4.1.27	SEAT BELT, 2"	INCLUDED
4.1.28	SEAT BELT, 3"	$ 200.00
4.1.29	RETURN TO DIG/ WORKTOOL POSITIONER	INCLUDED
4.1.30	COUNTERWEIGHT, MACHINE EXTERNAL	$ 720.00
4.1.31	MOUNTING, FIRE EXTINGUISHER	$ 290.00
4.1.32	SINGLE EYE LIFTING POINT	$ 1,200.00
4.1.33	LIFTING EYE 4 POINT	$ 140.00
4.1.34	FOPS, LEVEL 2	$ 2,700.00
4.1.35	HEATER, ENGINE COOLANT, 120V	$ 140.00
4.1.36	PRODUCT LINK, CELLULAR, PL243	INCLUDED
4.1.37	PRODUCT LINK, CELLULAR, PL641	$ 330.00
4.1.38	OIL, HYDRAULIC, COLD OPERATION	$ 470.00
4.1.39	PATTERN CHANGER	$ 750.00
4.1.40	CASE DEDICATED CONTROLS	$ 100.00
4.1.41	PAINT, CUSTOM	$ 1,460.00
4.1.42	CORRISION INHIBITOR - EquipCoat Spray / Clear Coat	$ 2,500.00
4.1.43	DUAL/SINGLE IDLER	$ (720.00)
4.1.44	TRIPLE FLANGE IDLERS	INCLUDED
4.1.45	TRACK, RUBBER, 12.6 IN (320MM) BAR TREAD	$ (510.00)
4.1.46	TRACK, RUBBER, 15.7 IN (400MM) BLOCK TREAD	$ (50.00)
4.1.47	TRACK, RUBBER, 15.7 IN (400MM) BAR TREAD	INCLUDED
4.2	**Bucket Options:** Use this section to offer bucket options such as standard, snow or combination buckets, etc..	
4.2.1	BUCKET-GENERAL PURPOSE, BOLT ON CUTTING EDGE 62"	$ 1,130.00
4.2.2	BUCKET-GENERAL PURPOSE, BOLT ON CUTTING EDGE 68"	$ 1,230.00
4.2.3	BUCKET-GENERAL PURPOSE, BOLT ON CUTTING EDGE 74"	$ 1,360.00
4.2.4	BUCKET-GENERAL PURPOSE, BOLT ON CUTTING EDGE 80"	$ 1,440.00
4.2.5	BUCKET-GENERAL PURPOSE, BOLT ON CUTTING EDGE 86"	$ 1,540.00
4.2.6	BUCKET-LIGHT MATERIAL, BOLT ON CUTTING EDGE 74"	$ 1,390.00
4.2.7	BUCKET-LIGHT MATERIAL, BOLT ON CUTTING EDGE 80"	$ 1,490.00
4.2.8	BUCKET-LIGHT MATERIAL, BOLT ON CUTTING EDGE 86" (1.1 CU. YD.)	$ 1,600.00
4.2.9	BUCKET-LIGHT MATERIAL, BOLT ON CUTTING EDGE 86" (1.4 CU. YD.)	$ 1,780.00
4.2.10	BUCKET-LIGHT MATERIAL, BOLT ON CUTTING EDGE 98"	$ 1,800.00
4.2.11	BUCKET-LIGHT MATERIAL, BOLT ON CUTTING EDGE 104"	$ 1,870.00
4.2.12	BUCKET-LOW PROFILE, BOLT ON CUTTING EDGE 56"	$ 740.00
4.2.13	BUCKET-LOW PROFILE, BOLT ON CUTTING EDGE 62"	$ 850.00
4.2.14	BUCKET-LOW PROFILE, BOLT ON CUTTING EDGE 68"	$ 950.00
4.2.15	BUCKET-LOW PROFILE, BOLT ON CUTTING EDGE 74"	$ 1,050.00
4.2.16	BUCKET-LOW PROFILE, BOLT ON CUTTING EDGE 80"	$ 1,160.00
4.2.17	BUCKET-MULTI-PURPOSE, BOLT ON CUTTING EDGE W/SG, 62"	$ 3,030.00
4.2.18	BUCKET-MULTI-PURPOSE, BOLT ON TEETH W/SG 62"	$ 3,030.00
4.2.19	BUCKET-MULTI-PURPOSE, W/BO EDGE 68" W/SG	$ 3,290.00
4.2.20	BUCKET-MULTI-PURPOSE, BOLT ON TEETH 68" W/SG	$ 3,290.00
4.2.21	BUCKET-MULTI-PURPOSE, BOLT ON CUTTING EDGE 74" W/SG	$ 3,540.00
4.2.22	BUCKET-MULTI-PURPOSE, BOLT ON TEETH 74" W/SG	$ 3,540.00
4.2.23	BUCKET-MULTI-PURPOSE, BOLT ON CUTTING EDGE 80" W/SG	$ 3,800.00
4.2.24	BUCKET-MULTI-PURPOSE, BOLT ON TEETH 80" W/SG	$ 3,800.00
4.2.25	BUCKET-MULTI-PURPOSE, BOLT ON CUTTING EDGE 86" W/SG	$ 4,050.00
4.2.26	BUCKET-MULTI-PURPOSE, BOLT ON TEETH 86" W/SG	$ 4,050.00
4.2.27	BUCKET-TOOTH, BOLT ON TEETH 62"	$ 1,180.00
4.2.28	BUCKET-TOOTH, BOLT ON TEETH 68"	$ 1,270.00
4.2.29	BUCKET-TOOTH, BOLT ON TEETH 74"	$ 1,360.00
4.2.30	BUCKET-TOOTH, BOLT ON TEETH 80"	$ 1,470.00
4.2.31	BUCKET-TOOTH, BOLT ON TEETH 86"	$ 1,560.00
4.2.32	BUCKET-UTILITY, BOLT ON CUTTING EDGE 62"	$ 1,030.00
4.2.33	BUCKET-UTILITY, BOLT ON CUTTING EDGE 68"	$ 1,130.00
4.2.34	BUCKET-UTILITY, BOLT ON CUTTING EDGE 74"	$ 1,230.00

SKID / COMPACT TRACK LOADER
OPTIONS - FIXED PRICING
SPECIFICATION 4.0

Spec #	Description	Price
4.3	**Overtire tracks:**	
	Use this section to offer overtire tracks.	
4.4	**Forks:**	
	Use this section to offer fork options, such as pallet forks, bale handler, etc..	
4.4.1	FORKS, 48" PALLET W/ CARRIAGE	$ 710.00
4.4.2	FORKS, 66" INDUSTRIAL GRAPPLE	$ 4,640.00
4.4.3	FORKS, 72" INDUSTRIAL GRAPPLE	$ 5,540.00
4.5	**Adaptor Plate:**	
	Use this section to offer adaptor plate options.	
	Universal Adapter Plate	$ 220.00
4.6	**Snowblower:**	
	Use this section to offer snowblower options.	
4.6.1	SR115 SNOW BLOWER, 60" WORKING WIDTH, 20-23 GPM HYDRAULIC FLOW	$ 6,990.00
4.6.2	SR118 SNOW BLOWER, 72" WORKING WIDTH, 20-23 GPM HYDRAULIC FLOW	$ 7,100.00
4.6.3	SR121 SNOW BLOWER, 85" WORKING WIDTH, 20-23 GPM HYDRAULIC FLOW	$ 7,200.00
4.6.4	SR318 SNOW BLOWER, 72" WORKING WIDTH, 31-33 GPM HYDRAULIC FLOW	$ 7,470.00
4.6.5	SR321 SNOW BLOWER, 85" WORKING WIDTH, 31-33 GPM HYDRAULIC FLOW	$ 7,950.00
4.7	**Sweeper:**	
	Use this section to offer sweeper options.	
4.7.1	BA118C, MANUAL ANGLE, 83" WIDTH	$ 5,970.00
4.7.2	BA118C, HYDRAULIC ANGLE, 83" WIDTH	$ 7,120.00
4.7.3	BP115C, PICKUP BROOM	$ 5,530.00
4.7.4	BP118C, PICKUP BROOM	$ 5,940.00
4.7.5	BU115, UTILITY BROOM	$ 3,770.00
4.7.6	BU118, UTILITY BROOM	$ 4,100.00
4.8	**Backhoe:**	
	Use this section to offer backhoe options.	
4.8.1	BACKHOE, BH150 (INCLUDES D SERIES MOUNTING BRACKET AND 24" BUCKET).	$ 14,830.00
4.8.2	BACKHOE, BH160 W/ AUXILIARY (INCLUDES D SERIES MOUNTING BRACKET AND 24" BUCKET).	$ 15,280.00
4.9	**Planer:**	
	Use this section to offer planer options.	
4.9.1	COLD PLANER, PC104B, 14" WORKING WIDTH, 16-21 GPM REQUIRED HYDRAULIC FLOW	$ 10,000.00
4.9.2	COLD PLANER, PC205B, 18" WORKING WIDTH, 21-31 GPM REQUIRED HYDRAULIC FLOW	$ 12,550.00
4.9.3	COLD PLANER, PC305B, 18" WORKING WIDTH, 26-33 GPM REQUIRED HYDRAULIC FLOW	$ 15,400.00
4.9.4	COLD PLANER, PC306B, 24" WORKING WIDTH, 26-33 GPM REQUIRED HYDRAULIC FLOW	$ 16,510.00
4.9.5	COLD PLANER, PC408B, 30" WORKING WIDTH, 40 GPM REQUIRED HYDRAULIC FLOW	$ 19,490.00
4.9.6	COLD PLANER, PC310B, 39" WORKING WIDTH, 33 GPM REQUIRED HYDRAULIC FLOW	$ 23,010.00
4.9.7	COLD PLANER, PC412, 47" WORKING WIDTH, 40 GPM REQUIRED HYDRAULIC FLOW	$ 25,560.00
4.10	**Snow Plow:**	
	Use this section to offer snow plow options.	
4.10.1	SNOW PLOW, 72"	$ 3,580.00
4.10.2	SNOW PLOW, 84"	$ 3,780.00
4.10.3	SNOW PLOW, 96"	$ 3,980.00
4.10.4	SNOW PLOW, 108"	$ 4,240.00
4.10.5	SNOW PLOW, 120"	$ 4,780.00
4.10.6	SNOW PUSH, SSL, STD DTY 8'	$ 2,520.00
4.10.7	SNOW PUSH, SSL, STD DTY 10'	$ 2,970.00
4.10.8	SNOW PUSH, SSL, STD DTY 12'	$ 3,530.00
4.11	**Hydraulic breaker:**	
	Use this section to offer hydraulic breaker options.	
4.11.1	H55S HAMMER WITH SSL MOUNTS	$ 7,850.00
4.11.2	H65S HAMMER WITH SSL MOUNTS	$ 9,230.00
4.11.3	B4 HAMMER, NON-SILENCED WITH SSL MOUNTS	$ 4,390.00
4.11.4	B4S HAMMER, SILENCED WITH SSL MOUNTS	$ 4,880.00
4.11.5	B6S HAMMER, SILENCED WITH SSL MOUNTS	$ 7,100.00
4.11.6	B6S HAMMER, NON-SILENCED WITH SSL MOUNTS	$ 6,390.00
4.11.7	B8S HAMMER, SILENCED WITH SSL MOUNTS	$ 9,430.00
4.11.8	B8 HAMMER, NON-SILENCED WITH SSL MOUNTS	$ 8,490.00

SKID / COMPACT TRACK LOADER
OPTIONS - FIXED PRICING
SPECIFICATION 4.0

Spec #	Description	Price
4.12	**Grapple:**	
	Use this section to offer grapple options.	
4.12.1	BUCKET, UTILITY GRAPPLE 68"	$ 2,430.00
4.12.2	BUCKET, UTILITY GRAPPLE 74"	$ 2,530.00
4.12.3	BUCKET, INDUSTRIAL GRAPPLE 62"	$ 3,590.00
4.12.4	BUCKET, INDUSTRIAL GRAPPLE 68"	$ 3,760.00
4.12.5	BUCKET, INDUSTRIAL GRAPPLE 74"	$ 4,210.00
4.12.6	BUCKET, INDUSTRIAL GRAPPLE 80"	$ 4,640.00
4.12.7	GRAPPLE RAKE 72"	$ 3,140.00
4.12.8	GRAPPLE RAKE 84"	$ 3,510.00
4.13	**Landscape:**	
	Use this section to offer landscape options.	
4.13.1	BRUSHCUTTER, BR160, 60"	$ 4,700.00
4.13.2	BRUSHCUTTER, BR166, 66"	$ 4,910.00
4.13.3	BRUSHCUTTER, BR172, 72"	$ 5,130.00
4.13.4	BRUSHCUTTER, BR272, 72" HF	$ 5,350.00
4.13.5	BRUSHCUTTER, BR378, 78" HF,XPS	$ 6,440.00
4.13.6	BRUSHCUTTER, BRX118 72"	$ 11,850.00
4.13.7	BRUSHCUTTER, BRX318 72", HF, XPS	$ 12,170.00
4.13.8	BRUSHCUTTER, BRX418	$ 12,170.00
4.13.9	LANDSCAPE RAKE, LR15B	$ 5,910.00
4.13.10	LANDSCAPE RAKE, LR18B	$ 6,330.00
4.13.11	LANDSCAPE TILLER, LT13B	$ 4,180.00
4.13.12	LANDSCAPE TILLER, LT18B	$ 4,740.00
4.13.13	MULCHER, HM112C, 49", 16-18 GPM REQUIRED HYDRAULIC FLOW	$ 19,330.00
4.13.14	MULCHER, HM115C, 58", 20-23 GPM REQUIRED HYDRAULIC FLOW	$ 20,330.00
4.13.15	MULCHER, HM215C, 58", 25-31 GPM REQUIRED HYDRAULIC FLOW	$ 21,080.00
4.13.16	MULCHER, HM315C, 58", 31-33 GPM REQUIRED HYDRAULIC FLOW	$ 27,830.00
4.13.17	MULCHER, HM415C, 58.6", 36-41 GPM REQUIRED HYDRAULIC FLOW	$ 30,300.00
4.13.18	MULCHER, HM418C, 67.2", 40-41 GPM REQUIRED HYDRAULIC FLOW	$ 32,230.00
4.13.19	POWER BOX RAKE-HYDRAULIC,PR172	$ 8,620.00
4.13.20	POWER BOX RAKE-HYDRAULIC,PR184	$ 9,120.00
4.13.21	POWER BOX RAKE-HYDRAULIC,PR190	$ 9,830.00
4.13.22	POWER BOX RAKE-MANUAL, PR172	$ 7,910.00
4.13.23	POWER BOX RAKE-MANUAL, PR184	$ 8,190.00
4.13.24	STUMP GRINDER, SG16B	$ 6,370.00
4.13.25	STUMP GRINDER, SG18B	$ 7,370.00
4.13.26	TRENCHER, T6B, 36" BOOM LENGTH	$ 4,610.00
4.13.27	TRENCHER, T9B, 48" BOOM LENGTH	$ 4,880.00
4.13.28	TRENCHER, T15B 6", 60" BOOM LENGTH	$ 6,250.00
4.14	**Grader:**	
	Use this section to offer grader options.	
4.14.1	BB121, 84", GRADING BOX, INCLUDES TECHNOLOGY AND INSTALLATION.	$ 15,890.00
4.14.2	BB124, 96", GRADING BOX, INCLUDES TECHNOLOGY AND INSTALLATION.	$ 16,200.00
4.14.3	BLADE, DOZER, 6-WAY, 79"	$ 5,070.00
4.14.4	BLADE, DOZER, 6-WAY, 92"	$ 5,570.00
4.15	**Auger:**	
	Use this section to offer auger options.	
4.15.1	AUGER, A14B	$ 1,900.00
4.15.2	AUGER, A19B	$ 2,250.00
4.15.3	AUGER, A26B, HF	$ 3,620.00
4.15.4	BIT, AUGER 6"	$ 290.00
4.15.5	BIT, AUGER 9"	$ 380.00
4.15.6	BIT, AUGER 12"	$ 480.00
4.15.7	BIT, AUGER 15" STANDARD	$ 580.00
4.15.8	BIT, AUGER 18"	$ 670.00
4.15.9	BIT, AUGER 24"	$ 860.00
4.15.10	BIT, AUGER 30"	$ 1,050.00
4.15.11	BIT, AUGER 36"	$ 1,230.00
4.15.12	BIT, AUGER 6" INDUSTRIAL	$ 400.00
4.15.13	BIT, AUGER 9" INDUSTRIAL	$ 490.00
4.15.14	BIT, AUGER 12" INDUSTRIAL	$ 580.00
4.15.15	BIT, AUGER 16" INDUSTRIAL	$ 700.00
4.15.16	BIT, AUGER 18" INDUSTRIAL	$ 770.00
4.15.17	BIT, AUGER 24" INDUSTRIAL	$ 1,130.00
4.15.18	TREE BIT, AUGER 24"	$ 760.00
4.15.19	TREE BIT, AUGER 36"	$ 1,190.00
4.15.20	ADAPTER, AUGER - HEX TO ROUND	$ 140.00
4.15.21	ADAPTER, AUGER - ROUND TO HEX	$ 120.00
4.15.22	EXTENSION, TELESCOPING 3'	$ 280.00
4.15.23	EXTENSION, TELESCOPING 6'	$ 470.00
4.15.24	EXTENSION, AUGER 12"	$ 120.00
4.15.25	EXTENSION, AUGER 24"	$ 170.00

SKID / COMPACT TRACK LOADER
OPTIONS - FIXED PRICING
SPECIFICATION 4.0

Spec #	Description	Price
4.16	**Wheel saw:**	
	Use this section to offer wheel saw options.	
4.16.1	WHEEL SAW, SW345B, 3"	$ 19,340.00
4.16.2	WHEEL SAW, SW360B, 3"	$ 21,910.00
4.16.3	WHEEL SAW, SW360B, 6"	$ 22,270.00
4.16.4	WHEEL SAW, SW360B, 8"	$ 23,320.00
4.16.5	WHEEL SAW, SW460B, 3"	$ 22,270.00
4.16.6	WHEEL SAW, SW460, 6"	$ 22,940.00
4.16.7	WHEEL SAW, SW460, 8"	$ 23,320.00
4.16.8	WHEEL SAW, SW380B, 10"	$ 30,810.00
4.17	**Vibratory roller:**	
	Use this section to offer vibratory roller options.	
4.17.1	CV16B, VIBRATORY COMPACTOR	$ 9,470.00
4.17.2	CV18B, VIBRATORY COMPACTOR	$ 10,150.00
4.18	**Other:**	
	Use this section to offer any other option not already covered.	
4.18.1	S305, SSL SHEARS - 9.4" JAW OPENING	$ 23,510.00
4.18.2	MATERIAL HANDLING ARM, 84", 2,000 LB. CAPACITY	$ 1,320.00
4.18.3	MB200, MIXING BUCKET	$ 5,510.00
4.18.4	MB250, MIXING BUCKET	$ 5,770.00
4.19	**EXTENDED WARRANTY OPTIONS**	
	Use this section to offer performance/warranty options, number these items starting with 20.1, 20.2, 20.3, etc. **(Specify years, miles or hours extended term covers.)**	
4.19.1	3 Year / 3,000 Hour Powertrain Warranty	$ 800.00
4.19.2	3 Year / 4,000 Hour Powertrain Warranty	$ 930.00
4.19.3	3 Year / 5,000 Hour Powertrain Warranty	$ 1,070.00
4.19.4	3 Year / 3,000 Hour Powertrain + Hydraulics + Technology Warranty	$ 1,400.00
4.19.5	3 Year / 4,000 Hour Powertrain + Hydraulics + Technology Warranty	$ 1,630.00
4.19.6	3 Year / 5,000 Hour Powertrain + Hydraulics + Technology Warranty	$ 1,890.00
4.19.7	3 Year - 3,000 Hour Premier Warranty	$ 2,710.00
4.19.8	3 Year - 4,000 Hour Premier Warranty	$ 3,150.00
4.19.9	3 Year - 5,000 Hour Premier Warranty	$ 3,650.00
4.19.10	4 Year / 3,000 Hour Powertrain Warranty	$ 930.00
4.19.11	4 Year / 4,000 Hour Powertrain Warranty	$ 1,530.00
4.19.12	4 Year / 5,000 Hour Powertrain Warranty	$ 1,740.00
4.19.13	4 Year / 3,000 Hour Powertrain + Hydraulics + Technology Warranty	$ 1,620.00
4.19.14	4 Year / 4,000 Hour Powertrain + Hydraulics + Technology Warranty	$ 2,710.00
4.19.15	4 Year / 5,000 Hour Powertrain + Hydraulics + Technology Warranty	$ 3,070.00
4.19.16	4 Year - 3,000 Hour Premier Warranty	$ 3,140.00
4.19.17	4 Year - 4,000 Hour Premier Warranty	$ 5,240.00
4.19.18	4 Year - 5,000 Hour Premier Warranty	$ 5,940.00
4.19.19	5 Year / 3,000 Hour Powertrain Warranty	$ 1,060.00
4.19.20	5 Year / 4,000 Hour Powertrain Warranty	$ 1,740.00
4.19.21	5 Year / 5,000 Hour Powertrain Warranty	$ 2,710.00
4.19.22	5 Year / 3,000 Hour Powertrain + Hydraulics + Technology Warranty	$ 1,870.00
4.19.23	5 Year / 4,000 Hour Powertrain + Hydraulics + Technology Warranty	$ 3,060.00
4.19.24	5Year / 5,000 Hour Powertrain + Hydraulics + Technology Warranty	$ 4,780.00
4.19.25	5 Year - 3,000 Hour Premier Warranty	$ 3,620.00
4.19.26	5 Year - 4,000 Hour Premier Warranty	$ 5,930.00
4.19.27	5 Year - 5,000 Hour Premier Warranty	$ 9,260.00
4.19.46	*does not include travel charges	
4.19.47	*see attached warranty statement	

4.20 NEW EQUIPMENT RENTAL PROGRAM

If rental programs are available on the new equipment offered, with the option to purchase, list the hourly/weekly/monthly rental rate. Indicate the percent of rental fee paid by the purchaser that will be applied to the purchase price. See Solicitation Special Terms & Conditions.

Hourly Rental Rate:	$24.00
Weekly Rental Rate:	$800.00
Monthly Rental Rate:	$2,400.00
Percent (%) of Rental Fee applied to purchase price:	100%

If the new rental equipment is purchased and finance

Charges are applicable for the actual rental term only.

State the actual interest rate here: _____Prime + 3%_____

4.21 VENDOR OWNED RENTAL RETURN OR DEMO EQUIPMENT PROGRAM

(See Solicitation Special Terms and Conditions.)

DEDUCT cost per Used Hour from the original Contract Price: $15.00

4.22 DELIVERY STARTING POINT - City, State, Zip: Nearest Ziegler Location

(See Special Terms and Conditions - no flat rate allowed.) **Price Per Loaded Mile:** $3.00

4.23 INSTALLATION - PER HOUR (Hourly Shop Rate):

Installation services may be requested on an "as needed" basis - see special terms and conditions.) $138.00

4.24 PRICE FOR ADDITIONAL MANUALS (1 of each included at no cost, per specs)

ADDITIONAL SERVICE MANUAL		
	Digital	$ 50.00
	Paper	$ 950.00
ADDITIONAL PARTS MANUAL		
	Digital	$ 50.00
	Paper	$ 50.00
PRICE FOR ADDITIONAL OPERATIONS MANUAL		
	Digital	$ 50.00
	Paper	$ 50.00

4.25 DISCOUNT OFF LIST PRICE FOR RELATED PARTS & ACCESSORIES %

(See Special Terms and Conditions)

T-631
Tractors: Skid Steers Attachments
 # 727-1019

October, 2019

Skid Steer / Compact Track Loaders

FIXED PRICING
(BASE UNIT INFORMATION)
Specification 3.0

Vendor Name:	**Ziegler Inc.**
Contact Person:	**Cory Dalbec, Chris Rice**
Street Address:	**901 West 94th Street**
P.O. Box:	
City, State, Zip	**Bloomington, MN 55420**
Phone #:	**952.888.4121**
Toll Free #:	**800.352.2812**
Email Address:	**cory.dalbec@zieglercat.com, chris.rice@zieglercat.com**
Website:	www.zieglercat.com

Spec #	Information Requested	Answer
3.1	**MAKE AND MODEL**	Caterpillar 262D3
	Engine Type and SAE net HP	Cat 3.3B DIT (Turbo) 72.9 HP
	Tier	Tier 4 Final
	Length w/o attachments	117.9"
	Height with operator cab	83.1
	Ground clearance	8.9"
	Maximum height to bucket hinge pin	124.9"
	Breakout force	7,355 lb
	Reach at maximum height	30.9"
	Dump angle at maximum height	51 degrees
	Dump height with standard bucket	93.7"
	Front clearance circle with standard bucket	85.9"
	Rear clearance circle	71.1"
	Tipping load - SAE rated	5,400 lbs.
	Rated operating capacity - SAE	2,700 lbs.
	Standard bucket capacity - SAE heaped rating	.57 cu yd
	Operating weight - SAE rated	8,296 lbs.
	Travel speed	1 speed -7.7 mph 2-speed 11 mph
	Fuel tank capacity	27.7 gallons
	Cold weather starting assist	Glow Plugs
	Battery CCA	850 CCA
	Alternator size - amps	80 amps
	Transmission type	Hydrostatic
	Tire / Track size / width	TIRES, 12X16.5 10PR CAT- 72" WIDTH
	Final drive chains and drive method	#100 pre-stressed chain Direct sprocket to chain drive
	Final drive chain adjustment / maintenance	500 Hours
	Gauges / instrumentation	Gauges: fuel level, hour meter Instrumentation: Engine coolant temperature, engine oil pressure, hydraulic oil temperature
	Pump type - GPM and PSI	Piston/23 GPM/3335 PSI
	Control valves	Hydraulic 3 section
	Hydraulic oil cooler	Included - air to oil
	Drive controls	Electro/Hydraulic - hand controls
	Lift and tilt controls	Electro/Hydraulic - hand controls
	Engine speed control	Both foot and hand control
	Work lights - front	Included 2 each
	Work lights - rear	Included 2 each
	Warranty	2 years / unlimited hours full machine
	BASE UNIT PRICE:	$ 45,920.00

SKID / COMPACT TRACK LOADER
OPTIONS - FIXED PRICING
SPECIFICATION 4.0

Spec #	Description	Price
	Price for base unit:	$ 45,920.00
4.1	**Skid/Compact Track Loader Options:** Use this section to offer additional skid/track loader options such as hand controls, gauges, heater, enclosed cab etc.. These options should be for skid steer power unit and not attachments.	
4.1.1	PRESSURIZED CAB, HEATER/DEFROSTER & DOOR	$ (1,390.00)
4.1.2	PRESSURIZED CAB, HEATER/DEFROSTER, AIR CONDITIONING & DOOR	INCLUDED
4.1.3	OPEN ROPS	$ (3,020.00)
4.1.4	AIR SUSPENSION SEAT-VINYL	$ (20.00)
4.1.5	AIR SUSPENSION SEAT-CLOTH	INCLUDED
4.1.6	PROPORTIONAL WORK TOOL CONTROL	INCLUDED
4.1.7	HAND & FOOT CONTROLS	$ 290.00
4.1.8	TWO SPEED CONTROL	INCLUDED
4.1.9	HYDRAULIC COUPLER	INCLUDED
4.1.10	MANUAL COUPLER	$ (680.00)
4.1.11	FAN, COOLING, DEMAND	INCLUDED
4.1.12	FAN, COOLING, DEMAND, REVERSING	$ 570.00
4.1.13	RIDE CONTROL	$ 710.00
4.1.14	HIGH FLOW HYDRAULICS	$ 2,080.00
4.1.15	DOOR, CAB, POLYCARBONATE	$ 150.00
4.1.16	DOOR, CAB, GLASS	INCLUDED
4.1.17	RADIO AM-FM, CD, BLUETOOTH	INCLUDED
4.1.18	ADVANCED DISPLAY WITH BACKUP CAMERA	INCLUDED
4.1.19	PROPORTIONAL HYDRAULICS	$ (280.00)
4.1.20	DUAL SELF-LEVELING	INCLUDED
4.1.21	HEAVY DUTY BATTERY W/DISCONNECT	$ 90.00
4.1.22	LIGHTS LED	INCLUDED
4.1.23	HALOGEN LIGHTS	$ (190.00)
4.1.24	BEACON LIGHT	$ 150.00
4.1.25	REAR LIGHTS	INCLUDED
4.1.26	REAR LIGHTS, STOP/TAIL/TURN	$ 540.00
4.1.27	ROADING LIGHTS	$ 680.00
4.1.28	SEAT BELT, 2"	INCLUDED
4.1.29	SEAT BELT, 3"	$ 200.00
4.1.30	RETURN TO DIG/ WORKTOOL POSITIONER	INCLUDED
4.1.31	COUNTERWEIGHT, MACHINE EXTERNAL	$ 700.00
4.1.32	MOUNTING, FIRE EXTINGUISHER	$ 290.00
4.1.33	SINGLE EYE LIFTING POINT	$ 1,200.00
4.1.34	LIFTING EYE 4 POINT	$ 130.00
4.1.35	FOPS, LEVEL 2	$ 2,700.00
4.1.36	HEATER, ENGINE COOLANT, 120V	$ 140.00
4.1.37	PRODUCT LINK, CELLULAR, PL243	INCLUDED
4.1.38	PRODUCT LINK, CELLULAR, PL641	$ 320.00
4.1.39	OIL, HYDRAULIC, COLD OPERATION	$ 450.00
4.1.40	PATTERN CHANGER	$ 750.00
4.1.41	CASE DEDICATED CONTROLS	$ 100.00
4.1.42	PAINT, CUSTOM	$ 1,460.00
4.1.43	CORRISION INHIBITOR - EquipCoat Spray / Clear Coat	$ 2,500.00
4.1.44	TIRES, 12/16.5 CAT 10PR	INCLUDED
4.1.45	TIRES, 12 X 16.5 14PR CAT, XD- 66" WIDTH	$ 1,060.00
4.1.46	TIRES, 12 X 16.5 10PR CAT- 66" WIDTH	$ 700.00
4.1.47	TIRES, 33 X 6 X 11 CAT, FLXPRT- 72" WIDTH	$ 2,240.00
4.1.48	TIRES, 12 X 16.5 14PR CAT, XD- 72" WIDTH	$ 1,060.00
4.1.49	TIRES, 12 X 16.5 10PR CAT- 72" WIDTH	$ 700.00
4.2	**Bucket Options:** Use this section to offer bucket options such as standard, snow or combination buckets, etc..	
4.2.1	BUCKET-GENERAL PURPOSE, BOLT ON CUTTING EDGE 62"	$ 1,130.00
4.2.2	BUCKET-GENERAL PURPOSE, BOLT ON CUTTING EDGE 68"	$ 1,230.00
4.2.3	BUCKET-GENERAL PURPOSE, BOLT ON CUTTING EDGE 74"	$ 1,360.00
4.2.4	BUCKET-GENERAL PURPOSE, BOLT ON CUTTING EDGE 80"	$ 1,440.00
4.2.5	BUCKET-GENERAL PURPOSE, BOLT ON CUTTING EDGE 86"	$ 1,540.00
4.2.6	BUCKET-LIGHT MATERIAL, BOLT ON CUTTING EDGE 74"	$ 1,390.00
4.2.7	BUCKET-LIGHT MATERIAL, BOLT ON CUTTING EDGE 80"	$ 1,490.00
4.2.8	BUCKET-LIGHT MATERIAL, BOLT ON CUTTING EDGE 86" (1.1 CU. YD.)	$ 1,600.00
4.2.9	BUCKET-LIGHT MATERIAL, BOLT ON CUTTING EDGE 86" (1.4 CU. YD.)	$ 1,780.00
4.2.10	BUCKET-LIGHT MATERIAL, BOLT ON CUTTING EDGE 98"	$ 1,800.00
4.2.11	BUCKET-LIGHT MATERIAL, BOLT ON CUTTING EDGE 104"	$ 1,870.00
4.2.12	BUCKET-LOW PROFILE, BOLT ON CUTTING EDGE 56"	$ 740.00
4.2.13	BUCKET-LOW PROFILE, BOLT ON CUTTING EDGE 62"	$ 850.00
4.2.14	BUCKET-LOW PROFILE, BOLT ON CUTTING EDGE 68"	$ 950.00
4.2.15	BUCKET-LOW PROFILE, BOLT ON CUTTING EDGE 74"	$ 1,050.00
4.2.16	BUCKET-LOW PROFILE, BOLT ON CUTTING EDGE 80"	$ 1,160.00
4.2.17	BUCKET-MULTI-PURPOSE, BOLT ON CUTTING EDGE W/SG, 62"	$ 3,030.00
4.2.18	BUCKET-MULTI-PURPOSE, BOLT ON TEETH W/SG 62"	$ 3,030.00
4.2.19	BUCKET-MULTI-PURPOSE, W/BO EDGE 68" W/SG	$ 3,290.00
4.2.20	BUCKET-MULTI-PURPOSE, BOLT ON TEETH 68" W/SG	$ 3,290.00
4.2.21	BUCKET-MULTI-PURPOSE, BOLT ON CUTTING EDGE 74" W/SG	$ 3,540.00
4.2.22	BUCKET-MULTI-PURPOSE, BOLT ON TEETH 74" W/SG	$ 3,540.00
4.2.23	BUCKET-MULTI-PURPOSE, BOLT ON CUTTING EDGE 80" W/SG	$ 3,800.00
4.2.24	BUCKET-MULTI-PURPOSE, BOLT ON TEETH 80" W/SG	$ 3,800.00
4.2.25	BUCKET-MULTI-PURPOSE, BOLT ON CUTTING EDGE 86" W/SG	$ 4,050.00
4.2.26	BUCKET-MULTI-PURPOSE, BOLT ON TEETH 86" W/SG	$ 4,050.00
4.2.27	BUCKET-TOOTH, BOLT ON TEETH 62"	$ 1,180.00
4.2.28	BUCKET-TOOTH, BOLT ON TEETH 68"	$ 1,270.00
4.2.29	BUCKET-TOOTH, BOLT ON TEETH 74"	$ 1,360.00
4.2.30	BUCKET-TOOTH, BOLT ON TEETH 80"	$ 1,470.00
4.2.31	BUCKET-TOOTH, BOLT ON TEETH 86"	$ 1,560.00
4.2.32	BUCKET-UTILITY, BOLT ON CUTTING EDGE 62"	$ 1,030.00
4.2.33	BUCKET-UTILITY, BOLT ON CUTTING EDGE 68"	$ 1,130.00
4.2.34	BUCKET-UTILITY, BOLT ON CUTTING EDGE 74"	$ 1,230.00

SKID / COMPACT TRACK LOADER
OPTIONS - FIXED PRICING
SPECIFICATION 4.0

Spec #	Description	Price
4.3	**Overtire tracks:**	
	Use this section to offer overtire tracks.	
4.4	**Forks:**	
	Use this section to offer fork options, such as pallet forks, bale handler, etc..	
4.4.1	FORKS, 48" PALLET W/ CARRIAGE	$ 710.00
4.4.2	FORKS, 66" INDUSTRIAL GRAPPLE	$ 4,640.00
4.4.3	FORKS, 72" INDUSTRIAL GRAPPLE	$ 5,540.00
4.5	**Adaptor Plate:**	
	Use this section to offer adaptor plate options.	
	Universal Adapter Plate	$ 220.00
4.6	**Snowblower:**	
	Use this section to offer snowblower options.	
4.6.1	SR115 SNOW BLOWER, 60" WORKING WIDTH, 20-23 GPM HYDRAULIC FLOW	$ 6,990.00
4.6.2	SR118 SNOW BLOWER, 72" WORKING WIDTH, 20-23 GPM HYDRAULIC FLOW	$ 7,100.00
4.6.3	SR121 SNOW BLOWER, 85" WORKING WIDTH, 20-23 GPM HYDRAULIC FLOW	$ 7,200.00
4.6.4	SR318 SNOW BLOWER, 72" WORKING WIDTH, 31-33 GPM HYDRAULIC FLOW	$ 7,470.00
4.6.5	SR321 SNOW BLOWER, 85" WORKING WIDTH, 31-33 GPM HYDRAULIC FLOW	$ 7,950.00
4.7	**Sweeper:**	
	Use this section to offer sweeper options.	
4.7.1	BA118C, MANUAL ANGLE, 83" WIDTH	$ 5,970.00
4.7.2	BA118C, HYDRAULIC ANGLE, 83" WIDTH	$ 7,120.00
4.7.3	BP115C, PICKUP BROOM	$ 5,530.00
4.7.4	BP118C, PICKUP BROOM	$ 5,940.00
4.7.5	BU115, UTILITY BROOM	$ 3,770.00
4.7.6	BU118, UTILITY BROOM	$ 4,100.00
4.8	**Backhoe:**	
	Use this section to offer backhoe options.	
4.8.1	BACKHOE, BH150 (INCLUDES D SERIES MOUNTING BRACKET AND 24" BUCKET).	$ 14,830.00
4.8.2	BACKHOE, BH160 W/ AUXILIARY (INCLUDES D SERIES MOUNTING BRACKET AND 24" BUCKET).	$ 15,280.00
4.9	**Planer:**	
	Use this section to offer planer options.	
4.9.1	COLD PLANER, PC104B, 14" WORKING WIDTH, 16-21 GPM REQUIRED HYDRAULIC FLOW	$ 10,000.00
4.9.2	COLD PLANER, PC205B, 18" WORKING WIDTH, 21-31 GPM REQUIRED HYDRAULIC FLOW	$ 12,550.00
4.9.3	COLD PLANER, PC305B, 18" WORKING WIDTH, 26-33 GPM REQUIRED HYDRAULIC FLOW	$ 15,400.00
4.9.4	COLD PLANER, PC306B, 24" WORKING WIDTH, 26-33 GPM REQUIRED HYDRAULIC FLOW	$ 16,510.00
4.9.5	COLD PLANER, PC408B, 30" WORKING WIDTH, 40 GPM REQUIRED HYDRAULIC FLOW	$ 19,490.00
4.9.6	COLD PLANER, PC310B, 39" WORKING WIDTH, 33 GPM REQUIRED HYDRAULIC FLOW	$ 23,010.00
4.9.7	COLD PLANER, PC412, 47" WORKING WIDTH, 40 GPM REQUIRED HYDRAULIC FLOW	$ 25,560.00
4.10	**Snow Plow:**	
	Use this section to offer snow plow options.	
4.10.1	SNOW PLOW, 72"	$ 3,580.00
4.10.2	SNOW PLOW, 84"	$ 3,780.00
4.10.3	SNOW PLOW, 96"	$ 3,980.00
4.10.4	SNOW PLOW, 108"	$ 4,240.00
4.10.5	SNOW PLOW, 120"	$ 4,780.00
4.10.6	SNOW PUSH, SSL, STD DTY 8'	$ 2,520.00
4.10.7	SNOW PUSH, SSL, STD DTY 10'	$ 2,970.00
4.10.8	SNOW PUSH, SSL, STD DTY 12'	$ 3,530.00
4.11	**Hydraulic breaker:**	
	Use this section to offer hydraulic breaker options.	
4.11.1	H55S HAMMER WITH SSL MOUNTS	$ 7,850.00
4.11.2	H65S HAMMER WITH SSL MOUNTS	$ 9,230.00
4.11.3	B4 HAMMER, NON-SILENCED WITH SSL MOUNTS	$ 4,390.00
4.11.4	B4S HAMMER, SILENCED WITH SSL MOUNTS	$ 4,880.00
4.11.5	B6S HAMMER, SILENCED WITH SSL MOUNTS	$ 7,100.00
4.11.6	B6S HAMMER, NON-SILENCED WITH SSL MOUNTS	$ 6,390.00
4.11.7	B8S HAMMER, SILENCED WITH SSL MOUNTS	$ 9,430.00
4.11.8	B8 HAMMER, NON-SILENCED WITH SSL MOUNTS	$ 8,490.00
4.12	**Grapple:**	
	Use this section to offer grapple options.	
4.12.1	BUCKET, UTILITY GRAPPLE 68"	$ 2,430.00
4.12.2	BUCKET, UTILITY GRAPPLE 74"	$ 2,530.00
4.12.3	BUCKET, INDUSTRIAL GRAPPLE 62"	$ 3,590.00
4.12.4	BUCKET, INDUSTRIAL GRAPPLE 68"	$ 3,760.00
4.12.5	BUCKET, INDUSTRIAL GRAPPLE 74"	$ 4,210.00
4.12.6	BUCKET, INDUSTRIAL GRAPPLE 80"	$ 4,640.00
4.12.7	GRAPPLE RAKE 72"	$ 3,140.00
4.12.8	GRAPPLE RAKE 84"	$ 3,510.00
4.13	**Landscape:**	
	Use this section to offer landscape options.	
4.13.1	BRUSHCUTTER, BR160, 60"	$ 4,700.00
4.13.2	BRUSHCUTTER, BR166, 66"	$ 4,910.00
4.13.3	BRUSHCUTTER, BR172, 72"	$ 5,130.00
4.13.4	BRUSHCUTTER, BR272, 72" HF	$ 5,350.00
4.13.5	BRUSHCUTTER, BR378, 78" HF,XPS	$ 6,440.00
4.13.6	BRUSHCUTTER, BRX118 72"	$ 11,850.00
4.13.7	BRUSHCUTTER, BRX318 72", HF, XPS	$ 12,170.00
4.13.8	BRUSHCUTTER, BRX418	$ 12,170.00
4.13.9	LANDSCAPE RAKE, LR15B	$ 5,910.00
4.13.10	LANDSCAPE RAKE, LR18B	$ 6,330.00
4.13.11	LANDSCAPE TILLER, LT13B	$ 4,180.00
4.13.12	LANDSCAPE TILLER, LT18B	$ 4,740.00
4.13.13	MULCHER, HM112C, 49", 16-18 GPM REQUIRED HYDRAULIC FLOW	$ 19,330.00
4.13.14	MULCHER, HM115C, 58", 20-23 GPM REQUIRED HYDRAULIC FLOW	$ 20,330.00
4.13.15	MULCHER, HM215C, 58", 25-31 GPM REQUIRED HYDRAULIC FLOW	$ 21,080.00
4.13.16	MULCHER, HM315C, 58", 31-33 GPM REQUIRED HYDRAULIC FLOW	$ 27,830.00
4.13.17	MULCHER, HM415C, 58.6", 36-41 GPM REQUIRED HYDRAULIC FLOW	$ 30,300.00
4.13.18	MULCHER, HM418C, 67.2", 40-41 GPM REQUIRED HYDRAULIC FLOW	$ 32,230.00
4.13.19	POWER BOX RAKE-HYDRAULIC,PR172	$ 8,620.00
4.13.20	POWER BOX RAKE-HYDRAULIC,PR184	$ 9,120.00
4.13.21	POWER BOX RAKE-HYDRAULIC,PR190	$ 9,830.00
4.13.22	POWER BOX RAKE-MANUAL, PR172	$ 7,910.00
4.13.23	POWER BOX RAKE-MANUAL, PR184	$ 8,190.00
4.13.24	STUMP GRINDER, SG16B	$ 6,370.00
4.13.25	STUMP GRINDER, SG18B	$ 7,370.00
4.13.26	TRENCHER, T6B, 36" BOOM LENGTH	$ 4,610.00
4.13.27	TRENCHER, T9B, 48" BOOM LENGTH	$ 4,880.00
4.13.28	TRENCHER, T15B 6", 60" BOOM LENGTH	$ 6,250.00

SKID / COMPACT TRACK LOADER
OPTIONS - FIXED PRICING
SPECIFICATION 4.0

Spec #	Description		Price
4.14	**Grader:**		
	Use this section to offer grader options.		
4.14.1	BB121, 84", GRADING BOX, INCLUDES TECHNOLOGY AND INSTALLATION.	$	15,890.00
4.14.2	BB124, 96", GRADING BOX, INCLUDES TECHNOLOGY AND INSTALLATION.	$	16,200.00
4.14.3	BLADE, DOZER, 6-WAY, 79"	$	5,070.00
4.14.4	BLADE, DOZER, 6-WAY, 92"	$	5,570.00
4.15	**Auger:**		
	Use this section to offer auger options.		
4.15.1	AUGER, A14B	$	1,900.00
4.15.2	AUGER, A19B	$	2,250.00
4.15.3	AUGER, A26B, HF	$	3,620.00
4.15.4	BIT, AUGER 6"	$	290.00
4.15.5	BIT, AUGER 9"	$	380.00
4.15.6	BIT, AUGER 12"	$	480.00
4.15.7	BIT, AUGER 15" STANDARD	$	580.00
4.15.8	BIT, AUGER 18"	$	670.00
4.15.9	BIT, AUGER 24"	$	860.00
4.15.10	BIT, AUGER 30"	$	1,050.00
4.15.11	BIT, AUGER 36"	$	1,230.00
4.15.12	BIT, AUGER 6" INDUSTRIAL	$	400.00
4.15.13	BIT, AUGER 9" INDUSTRIAL	$	490.00
4.15.14	BIT, AUGER 12" INDUSTRIAL	$	580.00
4.15.15	BIT, AUGER 16" INDUSTRIAL	$	700.00
4.15.16	BIT, AUGER 18" INDUSTRIAL	$	770.00
4.15.17	BIT, AUGER 24" INDUSTRIAL	$	1,130.00
4.15.18	TREE BIT, AUGER 24"	$	760.00
4.15.19	TREE BIT, AUGER 36"	$	1,190.00
4.15.20	ADAPTER, AUGER - HEX TO ROUND	$	140.00
4.15.21	ADAPTER, AUGER - ROUND TO HEX	$	120.00
4.15.22	EXTENSION, TELESCOPING 3'	$	280.00
4.15.23	EXTENSION, TELESCOPING 6'	$	470.00
4.15.24	EXTENSION, AUGER 12"	$	120.00
4.15.25	EXTENSION, AUGER 24"	$	170.00

SKID / COMPACT TRACK LOADER
OPTIONS - FIXED PRICING
SPECIFICATION 4.0

Spec #	Description	Price
4.16	**Wheel saw:**	
	Use this section to offer wheel saw options.	
4.16.1	WHEEL SAW, SW345B, 3"	$ 19,340.00
4.16.2	WHEEL SAW, SW360B, 3"	$ 21,910.00
4.16.3	WHEEL SAW, SW360B, 6"	$ 22,270.00
4.16.4	WHEEL SAW, SW360B, 8"	$ 23,320.00
4.16.5	WHEEL SAW, SW460B, 3"	$ 22,270.00
4.16.6	WHEEL SAW, SW460, 6"	$ 22,940.00
4.16.7	WHEEL SAW, SW460, 8"	$ 23,320.00
4.16.8	WHEEL SAW, SW380B, 10"	$ 30,810.00
4.17	**Vibratory roller:**	
	Use this section to offer vibratory roller options.	
4.17.1	CV16B, VIBRATORY COMPACTOR	$ 9,470.00
4.17.2	CV18B, VIBRATORY COMPACTOR	$ 10,150.00
4.18	**Other:**	
	Use this section to offer any other option not already covered.	
4.18.1	S305, SSL SHEARS - 9.4" JAW OPENING	$ 23,510.00
4.18.2	MATERIAL HANDLING ARM, 84", 2,000 LB. CAPACITY	$ 1,320.00
4.18.3	MB200, MIXING BUCKET	$ 5,510.00
4.18.4	MB250, MIXING BUCKET	$ 5,770.00
4.19	**EXTENDED WARRANTY OPTIONS**	
	Use this section to offer performance/warranty options, number these items starting with 20.1, 20.2, 20.3, etc. **(Specify years, miles or hours extended term covers.)**	
4.19.1	3 Year / 3,000 Hour Powertrain Warranty	$ 590.00
4.19.2	3 Year / 4,000 Hour Powertrain Warranty	$ 680.00
4.19.3	3 Year / 5,000 Hour Powertrain Warranty	$ 790.00
4.19.4	3 Year / 3,000 Hour Powertrain + Hydraulics + Technology Warranty	$ 1,000.00
4.19.5	3 Year / 4,000 Hour Powertrain + Hydraulics + Technology Warranty	$ 1,170.00
4.19.6	3 Year / 5,000 Hour Powertrain + Hydraulics + Technology Warranty	$ 1,350.00
4.19.7	3 Year - 3,000 Hour Premier Warranty	$ 1,480.00
4.19.8	3 Year - 4,000 Hour Premier Warranty	$ 1,730.00
4.19.9	3 Year - 5,000 Hour Premier Warranty	$ 1,980.00
4.19.10	4 Year / 3,000 Hour Powertrain Warranty	$ 680.00
4.19.11	4 Year / 4,000 Hour Powertrain Warranty	$ 1,130.00
4.19.12	4 Year / 5,000 Hour Powertrain Warranty	$ 1,290.00
4.19.13	4 Year / 3,000 Hour Powertrain + Hydraulics + Technology Warranty	$ 1,160.00
4.19.14	4 Year / 4,000 Hour Powertrain + Hydraulics + Technology Warranty	$ 1,930.00
4.19.15	4 Year / 5,000 Hour Powertrain + Hydraulics + Technology Warranty	$ 2,190.00
4.19.16	4 Year - 3,000 Hour Premier Warranty	$ 1,710.00
4.19.17	4 Year - 4,000 Hour Premier Warranty	$ 2,860.00
4.19.18	4 Year - 5,000 Hour Premier Warranty	$ 3,240.00
4.19.19	5 Year / 3,000 Hour Powertrain Warranty	$ 780.00
4.19.20	5 Year / 4,000 Hour Powertrain Warranty	$ 1,290.00
4.19.21	5 Year / 5,000 Hour Powertrain Warranty	$ 2,000.00
4.19.22	5 Year / 3,000 Hour Powertrain + Hydraulics + Technology Warranty	$ 1,340.00
4.19.23	5 Year / 4,000 Hour Powertrain + Hydraulics + Technology Warranty	$ 2,190.00
4.19.24	5Year / 5,000 Hour Powertrain + Hydraulics + Technology Warranty	$ 3,410.00
4.19.25	5 Year - 3,000 Hour Premier Warranty	$ 1,970.00
4.19.26	5 Year - 4,000 Hour Premier Warranty	$ 3,240.00
4.19.27	5 Year - 5,000 Hour Premier Warranty	$ 5,050.00
4.19.28	6 Year / 3,000 Hour Powertrain Warranty	$ 900.00
4.19.29	6 Year / 4,000 Hour Powertrain Warranty	$ 1,440.00
4.19.30	6 Year / 5,000 Hour Powertrain Warranty	$ 2,230.00
4.19.31	6 Year / 3,000 Hour Powertrain + Hydraulics + Technology Warranty	$ 1,530.00
4.19.32	6 Year / 4,000 Hour Powertrain + Hydraulics + Technology Warranty	$ 2,460.00
4.19.33	6Year / 5,000 Hour Powertrain + Hydraulics + Technology Warranty	$ 3,810.00
4.19.34	6 Year - 3,000 Hour Premier Warranty	$ 2,260.00
4.19.35	6 Year - 4,000 Hour Premier Warranty	$ 3,650.00
4.19.36	6 Year - 5,000 Hour Premier Warranty	$ 5,650.00
4.19.37	7 Year / 3,000 Hour Powertrain Warranty	$ 1,010.00
4.19.38	7 Year / 4,000 Hour Powertrain Warranty	$ 1,620.00
4.19.39	7 Year / 5,000 Hour Powertrain Warranty	$ 2,490.00
4.19.40	7 Year / 3,000 Hour Powertrain + Hydraulics + Technology Warranty	$ 1,740.00
4.19.41	7 Year / 4,000 Hour Powertrain + Hydraulics + Technology Warranty	$ 2,770.00
4.19.42	7Year / 5,000 Hour Powertrain + Hydraulics + Technology Warranty	$ 4,250.00
4.19.43	7 Year - 3,000 Hour Premier Warranty	$ 2,580.00
4.19.44	7 Year - 4,000 Hour Premier Warranty	$ 4,110.00
4.19.45	7 Year - 5,000 Hour Premier Warranty	$ 6,290.00
4.19.46	*does not include travel charges	
4.19.47	*see attached warranty statement	

4.20 NEW EQUIPMENT RENTAL PROGRAM

If rental programs are available on the new equipment offered, with the option to purchase, list the hourly/weekly/monthly rental rate. Indicate the percent of rental fee paid by the purchaser that will be applied to the purchase price. See Solicitation Special Terms & Conditions.

Hourly Rental Rate:	$22.00
Weekly Rental Rate:	$360.00
Monthly Rental Rate:	$1,080.00
Percent (%) of Rental Fee applied to purchase price:	100%

If the new rental equipment is purchased and finance

Charges are applicable for the actual rental term only.

State the actual interest rate here: _____Prime + 3%_____

4.21 VENDOR OWNED RENTAL RETURN OR DEMO EQUIPMENT PROGRAM

(See Solicitation Special Terms and Conditions.)

DEDUCT cost per Used Hour from the original Contract Price: $9.00

4.22 DELIVERY STARTING POINT - City, State, Zip: Nearest Ziegler Location

(See Special Terms and Conditions - no flat rate allowed.) **Price Per Loaded Mile:** $3.00

4.23 INSTALLATION - PER HOUR (Hourly Shop Rate):

Installation services may be requested on an "as needed" basis - see special terms and conditions.) $138.00

4.24 PRICE FOR ADDITIONAL MANUALS (1 of each included at no cost, per specs)

ADDITIONAL SERVICE MANUAL		
	Digital	$ 50.00
	Paper	$ 950.00
ADDITIONAL PARTS MANUAL		
	Digital	$ 50.00
	Paper	$ 50.00
PRICE FOR ADDITIONAL OPERATIONS MANUAL		
	Digital	$ 50.00
	Paper	$ 50.00

4.25 DISCOUNT OFF LIST PRICE FOR RELATED PARTS & ACCESSORIES %

(See Special Terms and Conditions)

T-631
Tractors: Skid Steers Attachments
 # 727-1019

Skid Steer / Compact Track Loaders

FIXED PRICING
(BASE UNIT INFORMATION)
Specification 3.0

October, 2019

Vendor Name:	**Ziegler Inc.**
Contact Person:	**Cory Dalbec, Chris Rice**
Street Address:	**901 West 94th Street**
P.O. Box:	
City, State, Zip	**Bloomington, MN 55420**
Phone #:	**952.888.4121**
Toll Free #:	**800.352.2812**
Email Address:	**cory.dalbec@zieglercat.com, chris.rice@zieglercat.com**
Website:	www.zieglercat.com

Spec #	Information Requested	Answer
3.1	**MAKE AND MODEL**	Caterpillar 272D3
	Engine Type and SAE net HP	Cat C3.8 DIT (Turbo) 95 HP
	Tier	Tier 4 Final
	Length w/o attachments	127.6"
	Height with operator cab	82.4"
	Ground clearance	8.9"
	Maximum height to bucket hinge pin	127.1"
	Breakout force	7,443 lb
	Reach at maximum height	14.7"
	Dump angle at maximum height	51 Degrees
	Dump height with standard bucket	96"
	Front clearance circle with standard bucket	89.8"
	Rear clearance circle	74.7"
	Tipping load - SAE rated	6,900 lb
	Rated operating capacity - SAE	3,450 lb
	Standard bucket capacity - SAE heaped rating	.62 cu yd.
	Operating weight - SAE rated	9,133 lbs.
	Travel speed	9.4 mph (Two Speed)
	Fuel tank capacity	31.7 gal
	Cold weather starting assist	Glow Plugs
	Battery CCA	850 CCA
	Alternator size - amps	100 amp
	Transmission type	Hydrostatic
	Tire / Track size / width	Tires, 14 X 17.5 14 PR Cat XD - 74" Width
	Final drive chains and drive method	#100 pre-stressed chain Direct sprocket to chain drive
	Final drive chain adjustment / maintenance	500 Hours
	Gauges / instrumentation	Gauges: fuel level, hour meter Instrumentation: Engine coolant temperature, engine oil pressure, hydraulic oil temperature
	Pump type - GPM and PSI	Piston - 23 GPM & 3,335 psi
	Control valves	Hydraulic 3 section
	Hydraulic oil cooler	Included - air to oil
	Drive controls	Electro/Hydraulic - hand controls
	Lift and tilt controls	Electro/Hydraulic - hand controls
	Engine speed control	Both foot and hand control
	Work lights - front	Included 2 each
	Work lights - rear	Included 2 each
	Warranty	2 years / unlimited hours full machine
	BASE UNIT PRICE:	$ 53,030.00

SKID / COMPACT TRACK LOADER
OPTIONS - FIXED PRICING
SPECIFICATION 4.0

Spec #	Description	Price
	Price for base unit:	$ 53,030.00
4.1	**Skid/Compact Track Loader Options:** Use this section to offer additional skid/track loader options such as hand controls, gauges, heater, enclosed cab etc.. These options should be for skid steer power unit and not attachments.	
4.1.1	PRESSURIZED CAB, HEATER/DEFROSTER & DOOR	$ (1,390.00)
4.1.2	PRESSURIZED CAB, HEATER/DEFROSTER, AIR CONDITIONING & DOOR	INCLUDED
4.1.3	OPEN ROPS	$ (3,020.00)
4.1.4	AIR SUSPENSION SEAT-VINYL	$ (20.00)
4.1.5	AIR SUSPENSION SEAT-CLOTH	INCLUDED
4.1.6	PROPORTIONAL WORK TOOL CONTROL	INCLUDED
4.1.7	HAND & FOOT CONTROLS	$ 290.00
4.1.8	TWO SPEED CONTROL	INCLUDED
4.1.9	HYDRAULIC COUPLER	INCLUDED
4.1.10	MANUAL COUPLER	$ (680.00)
4.1.11	FAN, COOLING, DEMAND	INCLUDED
4.1.12	FAN, COOLING, DEMAND, REVERSING	$ 570.00
4.1.13	RIDE CONTROL	$ 710.00
4.1.14	HIGH FLOW HYDRAULICS	$ 2,080.00
4.1.15	DOOR, CAB, POLYCARBONATE	$ 150.00
4.1.16	DOOR, CAB, GLASS	INCLUDED
4.1.17	RADIO AM-FM, CD, BLUETOOTH	INCLUDED
4.1.18	ADVANCED DISPLAY WITH BACKUP CAMERA	INCLUDED
4.1.19	PROPORTIONAL HYDRAULICS	$ (280.00)
4.1.20	DUAL SELF-LEVELING	INCLUDED
4.1.21	HEAVY DUTY BATTERY W/DISCONNECT	$ 90.00
4.1.22	LIGHTS LED	INCLUDED
4.1.23	HALOGEN LIGHTS	$ (190.00)
4.1.24	BEACON LIGHT	$ 150.00
4.1.25	REAR LIGHTS	INCLUDED
4.1.26	REAR LIGHTS, STOP/TAIL/TURN	$ 540.00
4.1.27	ROADING LIGHTS	$ 680.00
4.1.28	SEAT BELT, 2"	INCLUDED
4.1.29	SEAT BELT, 3"	$ 200.00
4.1.30	RETURN TO DIG/ WORKTOOL POSITIONER	INCLUDED
4.1.31	COUNTERWEIGHT, MACHINE EXTERNAL	$ 700.00
4.1.32	MOUNTING, FIRE EXTINGUISHER	$ 290.00
4.1.33	SINGLE EYE LIFTING POINT	$ 1,200.00
4.1.34	LIFTING EYE 4 POINT	$ 130.00
4.1.35	FOPS, LEVEL 2	$ 2,700.00
4.1.36	HEATER, ENGINE COOLANT, 120V	$ 140.00
4.1.37	PRODUCT LINK, CELLULAR, PL243	INCLUDED
4.1.38	PRODUCT LINK, CELLULAR, PL641	$ 320.00
4.1.39	OIL, HYDRAULIC, COLD OPERATION	$ 450.00
4.1.40	PATTERN CHANGER	$ 750.00
4.1.41	CASE DEDICATED CONTROLS	$ 100.00
4.1.42	PAINT, CUSTOM	$ 1,460.00
4.1.43	CORRISION INHIBITOR - EquipCoat Spray / Clear Coat	$ 2,500.00
4.1.44	TIRES, 14 X 17.5 CAT 14PR	INCLUDED
4.1.45	TIRES, 12 X 16.5 14PR CAT, XD- 66" WIDTH	$ 50.00
4.1.46	TIRES, 12 X 16.5 10PR CAT- 66" WIDTH	$ (310.00)
4.1.47	TIRES, 33 X 6 X 11 CAT, FLXPRT- 72" WIDTH	$ 1,470.00
4.1.48	TIRES, 12 X 16.5 14PR CAT, XD- 72" WIDTH	$ 50.00
4.1.49	TIRES, 12 X 16.5 10PR CAT- 72" WIDTH	$ (310.00)
4.1.50	TIRES, 14 X 17.5 14PR CAT XD - 74" WIDTH	$ 870.00
4.2	**Bucket Options:** Use this section to offer bucket options such as standard, snow or combination buckets, etc..	
4.2.1	BUCKET-GENERAL PURPOSE, BOLT ON CUTTING EDGE 62"	$ 1,130.00
4.2.2	BUCKET-GENERAL PURPOSE, BOLT ON CUTTING EDGE 68"	$ 1,230.00
4.2.3	BUCKET-GENERAL PURPOSE, BOLT ON CUTTING EDGE 74"	$ 1,360.00
4.2.4	BUCKET-GENERAL PURPOSE, BOLT ON CUTTING EDGE 80"	$ 1,440.00
4.2.5	BUCKET-GENERAL PURPOSE, BOLT ON CUTTING EDGE 86"	$ 1,540.00
4.2.6	BUCKET-LIGHT MATERIAL, BOLT ON CUTTING EDGE 74"	$ 1,390.00
4.2.7	BUCKET-LIGHT MATERIAL, BOLT ON CUTTING EDGE 80"	$ 1,490.00
4.2.8	BUCKET-LIGHT MATERIAL, BOLT ON CUTTING EDGE 86" (1.1 CU. YD.)	$ 1,600.00
4.2.9	BUCKET-LIGHT MATERIAL, BOLT ON CUTTING EDGE 86" (1.4 CU. YD.)	$ 1,780.00
4.2.10	BUCKET-LIGHT MATERIAL, BOLT ON CUTTING EDGE 98"	$ 1,800.00
4.2.11	BUCKET-LIGHT MATERIAL, BOLT ON CUTTING EDGE 104"	$ 1,870.00
4.2.12	BUCKET-LOW PROFILE, BOLT ON CUTTING EDGE 56"	$ 740.00
4.2.13	BUCKET-LOW PROFILE, BOLT ON CUTTING EDGE 62"	$ 850.00
4.2.14	BUCKET-LOW PROFILE, BOLT ON CUTTING EDGE 68"	$ 950.00
4.2.15	BUCKET-LOW PROFILE, BOLT ON CUTTING EDGE 74"	$ 1,050.00
4.2.16	BUCKET-LOW PROFILE, BOLT ON CUTTING EDGE 80"	$ 1,160.00
4.2.17	BUCKET-MULTI-PURPOSE, BOLT ON CUTTING EDGE W/SG, 62"	$ 3,030.00
4.2.18	BUCKET-MULTI-PURPOSE, BOLT ON TEETH W/SG 62"	$ 3,030.00
4.2.19	BUCKET-MULTI-PURPOSE, W/BO EDGE 68" W/SG	$ 3,290.00
4.2.20	BUCKET-MULTI-PURPOSE, BOLT ON TEETH 68" W/SG	$ 3,290.00
4.2.21	BUCKET-MULTI-PURPOSE, BOLT ON CUTTING EDGE 74" W/SG	$ 3,540.00
4.2.22	BUCKET-MULTI-PURPOSE, BOLT ON TEETH 74" W/SG	$ 3,540.00
4.2.23	BUCKET-MULTI-PURPOSE, BOLT ON CUTTING EDGE 80" W/SG	$ 3,800.00
4.2.24	BUCKET-MULTI-PURPOSE, BOLT ON TEETH 80" W/SG	$ 3,800.00
4.2.25	BUCKET-MULTI-PURPOSE, BOLT ON CUTTING EDGE 86" W/SG	$ 4,050.00
4.2.26	BUCKET-MULTI-PURPOSE, BOLT ON TEETH 86" W/SG	$ 4,050.00
4.2.27	BUCKET-TOOTH, BOLT ON TEETH 62"	$ 1,180.00
4.2.28	BUCKET-TOOTH, BOLT ON TEETH 68"	$ 1,270.00
4.2.29	BUCKET-TOOTH, BOLT ON TEETH 74"	$ 1,360.00
4.2.30	BUCKET-TOOTH, BOLT ON TEETH 80"	$ 1,470.00
4.2.31	BUCKET-TOOTH, BOLT ON TEETH 86"	$ 1,560.00
4.2.32	BUCKET-UTILITY, BOLT ON CUTTING EDGE 62"	$ 1,030.00
4.2.33	BUCKET-UTILITY, BOLT ON CUTTING EDGE 68"	$ 1,130.00
4.2.34	BUCKET-UTILITY, BOLT ON CUTTING EDGE 74"	$ 1,230.00

SKID / COMPACT TRACK LOADER
OPTIONS - FIXED PRICING
SPECIFICATION 4.0

Spec #	Description	Price
4.3	**Overtire tracks:**	
	Use this section to offer overtire tracks.	
4.4	**Forks:**	
	Use this section to offer fork options, such as pallet forks, bale handler, etc..	
4.4.1	FORKS, 48" PALLET W/ CARRIAGE	$ 710.00
4.4.2	FORKS, 66" INDUSTRIAL GRAPPLE	$ 4,640.00
4.4.3	FORKS, 72" INDUSTRIAL GRAPPLE	$ 5,540.00
4.5	**Adaptor Plate:**	
	Use this section to offer adaptor plate options.	
	Universal Adapter Plate	$ 220.00
4.6	**Snowblower:**	
	Use this section to offer snowblower options.	
4.6.1	SR115 SNOW BLOWER, 60" WORKING WIDTH, 20-23 GPM HYDRAULIC FLOW	$ 6,990.00
4.6.2	SR118 SNOW BLOWER, 72" WORKING WIDTH, 20-23 GPM HYDRAULIC FLOW	$ 7,100.00
4.6.3	SR121 SNOW BLOWER, 85" WORKING WIDTH, 20-23 GPM HYDRAULIC FLOW	$ 7,200.00
4.6.4	SR318 SNOW BLOWER, 72" WORKING WIDTH, 31-33 GPM HYDRAULIC FLOW	$ 7,470.00
4.6.5	SR321 SNOW BLOWER, 85" WORKING WIDTH, 31-33 GPM HYDRAULIC FLOW	$ 7,950.00
4.7	**Sweeper:**	
	Use this section to offer sweeper options.	
4.7.1	BA118C, MANUAL ANGLE, 83" WIDTH	$ 5,970.00
4.7.2	BA118C, HYDRAULIC ANGLE, 83" WIDTH	$ 7,120.00
4.7.3	BP115C, PICKUP BROOM	$ 5,530.00
4.7.4	BP118C, PICKUP BROOM	$ 5,940.00
4.7.5	BU115, UTILITY BROOM	$ 3,770.00
4.7.6	BU118, UTILITY BROOM	$ 4,100.00
4.8	**Backhoe:**	
	Use this section to offer backhoe options.	
4.8.1	BACKHOE, BH150 (INCLUDES D SERIES MOUNTING BRACKET AND 24" BUCKET).	$ 14,830.00
4.8.2	BACKHOE, BH160 W/ AUXILIARY (INCLUDES D SERIES MOUNTING BRACKET AND 24" BUCKET).	$ 15,280.00
4.9	**Planer:**	
	Use this section to offer planer options.	
4.9.1	COLD PLANER, PC104B, 14" WORKING WIDTH, 16-21 GPM REQUIRED HYDRAULIC FLOW	$ 10,000.00
4.9.2	COLD PLANER, PC205B, 18" WORKING WIDTH, 21-31 GPM REQUIRED HYDRAULIC FLOW	$ 12,550.00
4.9.3	COLD PLANER, PC305B, 18" WORKING WIDTH, 26-33 GPM REQUIRED HYDRAULIC FLOW	$ 15,400.00
4.9.4	COLD PLANER, PC306B, 24" WORKING WIDTH, 26-33 GPM REQUIRED HYDRAULIC FLOW	$ 16,510.00
4.9.5	COLD PLANER, PC408B, 30" WORKING WIDTH, 40 GPM REQUIRED HYDRAULIC FLOW	$ 19,490.00
4.9.6	COLD PLANER, PC310B, 39" WORKING WIDTH, 33 GPM REQUIRED HYDRAULIC FLOW	$ 23,010.00
4.9.7	COLD PLANER, PC412, 47" WORKING WIDTH, 40 GPM REQUIRED HYDRAULIC FLOW	$ 25,560.00
4.10	**Snow Plow:**	
	Use this section to offer snow plow options.	
4.10.1	SNOW PLOW, 72"	$ 3,580.00
4.10.2	SNOW PLOW, 84"	$ 3,780.00
4.10.3	SNOW PLOW, 96"	$ 3,980.00
4.10.4	SNOW PLOW, 108"	$ 4,240.00
4.10.5	SNOW PLOW, 120"	$ 4,780.00
4.10.6	SNOW PUSH, SSL, STD DTY 8'	$ 2,520.00
4.10.7	SNOW PUSH, SSL, STD DTY 10'	$ 2,970.00
4.10.8	SNOW PUSH, SSL, STD DTY 12'	$ 3,530.00
4.11	**Hydraulic breaker:**	
	Use this section to offer hydraulic breaker options.	
4.11.1	H55S HAMMER WITH SSL MOUNTS	$ 7,850.00
4.11.2	H65S HAMMER WITH SSL MOUNTS	$ 9,230.00
4.11.3	B4 HAMMER, NON-SILENCED WITH SSL MOUNTS	$ 4,390.00
4.11.4	B4S HAMMER, SILENCED WITH SSL MOUNTS	$ 4,880.00
4.11.5	B6S HAMMER, SILENCED WITH SSL MOUNTS	$ 7,100.00
4.11.6	B6S HAMMER, NON-SILENCED WITH SSL MOUNTS	$ 6,390.00
4.11.7	B8S HAMMER, SILENCED WITH SSL MOUNTS	$ 9,430.00
4.11.8	B8 HAMMER, NON-SILENCED WITH SSL MOUNTS	$ 8,490.00
4.12	**Grapple:**	
	Use this section to offer grapple options.	
4.12.1	BUCKET, UTILITY GRAPPLE 68"	$ 2,430.00
4.12.2	BUCKET, UTILITY GRAPPLE 74"	$ 2,530.00
4.12.3	BUCKET, INDUSTRIAL GRAPPLE 62"	$ 3,590.00
4.12.4	BUCKET, INDUSTRIAL GRAPPLE 68"	$ 3,760.00
4.12.5	BUCKET, INDUSTRIAL GRAPPLE 74"	$ 4,210.00
4.12.6	BUCKET, INDUSTRIAL GRAPPLE 80"	$ 4,640.00
4.12.7	GRAPPLE RAKE 72"	$ 3,140.00
4.12.8	GRAPPLE RAKE 84"	$ 3,510.00
4.13	**Landscape:**	
	Use this section to offer landscape options.	
4.13.1	BRUSHCUTTER, BR160, 60"	$ 4,700.00
4.13.2	BRUSHCUTTER, BR166, 66"	$ 4,910.00
4.13.3	BRUSHCUTTER, BR172, 72"	$ 5,130.00
4.13.4	BRUSHCUTTER, BR272, 72" HF	$ 5,350.00
4.13.5	BRUSHCUTTER, BR378, 78" HF,XPS	$ 6,440.00
4.13.6	BRUSHCUTTER, BRX118 72"	$ 11,850.00
4.13.7	BRUSHCUTTER, BRX318 72", HF, XPS	$ 12,170.00
4.13.8	BRUSHCUTTER, BRX418	$ 12,170.00
4.13.9	LANDSCAPE RAKE, LR15B	$ 5,910.00
4.13.10	LANDSCAPE RAKE, LR18B	$ 6,330.00
4.13.11	LANDSCAPE TILLER, LT13B	$ 4,180.00
4.13.12	LANDSCAPE TILLER, LT18B	$ 4,740.00
4.13.13	MULCHER, HM112C, 49", 16-18 GPM REQUIRED HYDRAULIC FLOW	$ 19,330.00
4.13.14	MULCHER, HM115C, 58", 20-23 GPM REQUIRED HYDRAULIC FLOW	$ 20,330.00
4.13.15	MULCHER, HM215C, 58", 25-31 GPM REQUIRED HYDRAULIC FLOW	$ 21,080.00
4.13.16	MULCHER, HM315C, 58", 31-33 GPM REQUIRED HYDRAULIC FLOW	$ 27,830.00
4.13.17	MULCHER, HM415C, 58.6", 36-41 GPM REQUIRED HYDRAULIC FLOW	$ 30,300.00
4.13.18	MULCHER, HM418C, 67.2", 40-41 GPM REQUIRED HYDRAULIC FLOW	$ 32,230.00
4.13.19	POWER BOX RAKE-HYDRAULIC,PR172	$ 8,620.00
4.13.20	POWER BOX RAKE-HYDRAULIC,PR184	$ 9,120.00
4.13.21	POWER BOX RAKE-HYDRAULIC,PR190	$ 9,830.00
4.13.22	POWER BOX RAKE-MANUAL, PR172	$ 7,910.00
4.13.23	POWER BOX RAKE-MANUAL, PR184	$ 8,190.00
4.13.24	STUMP GRINDER, SG16B	$ 6,370.00
4.13.25	STUMP GRINDER, SG18B	$ 7,370.00
4.13.26	TRENCHER, T6B, 36" BOOM LENGTH	$ 4,610.00
4.13.27	TRENCHER, T9B, 48" BOOM LENGTH	$ 4,880.00
4.13.28	TRENCHER, T15B 6", 60" BOOM LENGTH	$ 6,250.00
4.14	**Grader:**	
	Use this section to offer grader options.	
4.14.1	BB121, 84", GRADING BOX, INCLUDES TECHNOLOGY AND INSTALLATION.	$ 15,890.00
4.14.2	BB124, 96", GRADING BOX, INCLUDES TECHNOLOGY AND INSTALLATION.	$ 16,200.00
4.14.3	BLADE, DOZER, 6-WAY, 79"	$ 5,070.00
4.14.4	BLADE, DOZER, 6-WAY, 92"	$ 5,570.00

SKID / COMPACT TRACK LOADER
OPTIONS - FIXED PRICING
SPECIFICATION 4.0

Spec #	Description	Price
4.15	**Auger:** Use this section to offer auger options.	
4.15.1	AUGER, A14B	$ 1,900.00
4.15.2	AUGER, A19B	$ 2,250.00
4.15.3	AUGER, A26B, HF	$ 3,620.00
4.15.4	BIT, AUGER 6"	$ 290.00
4.15.5	BIT, AUGER 9"	$ 380.00
4.15.6	BIT, AUGER 12"	$ 480.00
4.15.7	BIT, AUGER 15" STANDARD	$ 580.00
4.15.8	BIT, AUGER 18"	$ 670.00
4.15.9	BIT, AUGER 24"	$ 860.00
4.15.10	BIT, AUGER 30"	$ 1,050.00
4.15.11	BIT, AUGER 36"	$ 1,230.00
4.15.12	BIT, AUGER 6" INDUSTRIAL	$ 400.00
4.15.13	BIT, AUGER 9" INDUSTRIAL	$ 490.00
4.15.14	BIT, AUGER 12" INDUSTRIAL	$ 580.00
4.15.15	BIT, AUGER 16" INDUSTRIAL	$ 700.00
4.15.16	BIT, AUGER 18" INDUSTRIAL	$ 770.00
4.15.17	BIT, AUGER 24" INDUSTRIAL	$ 1,130.00
4.15.18	TREE BIT, AUGER 24"	$ 760.00
4.15.19	TREE BIT, AUGER 36"	$ 1,190.00
4.15.20	ADAPTER, AUGER - HEX TO ROUND	$ 140.00
4.15.21	ADAPTER, AUGER - ROUND TO HEX	$ 120.00
4.15.22	EXTENSION, TELESCOPING 3'	$ 280.00
4.15.23	EXTENSION, TELESCOPING 6'	$ 470.00
4.15.24	EXTENSION, AUGER 12"	$ 120.00
4.15.25	EXTENSION, AUGER 24"	$ 170.00

SKID / COMPACT TRACK LOADER
OPTIONS - FIXED PRICING
SPECIFICATION 4.0

Spec #	Description		Price
4.16	**Wheel saw:**		
	Use this section to offer wheel saw options.		
4.16.1	WHEEL SAW, SW345B, 3"	$	19,340.00
4.16.2	WHEEL SAW, SW360B, 3"	$	21,910.00
4.16.3	WHEEL SAW, SW360B, 6"	$	22,270.00
4.16.4	WHEEL SAW, SW360B, 8"	$	23,320.00
4.16.5	WHEEL SAW, SW460B, 3"	$	22,270.00
4.16.6	WHEEL SAW, SW460, 6"	$	22,940.00
4.16.7	WHEEL SAW, SW460, 8"	$	23,320.00
4.16.8	WHEEL SAW, SW380B, 10"	$	30,810.00
4.17	**Vibratory roller:**		
	Use this section to offer vibratory roller options.		
4.17.1	CV16B, VIBRATORY COMPACTOR	$	9,470.00
4.17.2	CV18B, VIBRATORY COMPACTOR	$	10,150.00
4.18	**Other:**		
	Use this section to offer any other option not already covered.		
4.18.1	S305, SSL SHEARS - 9.4" JAW OPENING	$	23,510.00
4.18.2	MATERIAL HANDLING ARM, 84", 2,000 LB. CAPACITY	$	1,320.00
4.18.3	MB200, MIXING BUCKET	$	5,510.00
4.18.4	MB250, MIXING BUCKET	$	5,770.00
4.19	**EXTENDED WARRANTY OPTIONS**		
	Use this section to offer performance/warranty options, number these items starting with 20.1, 20.2, 20.3, etc. **(Specify years, miles or hours extended term covers.)**		
4.19.1	3 Year / 3,000 Hour Powertrain Warranty	$	610.00
4.19.2	3 Year / 4,000 Hour Powertrain Warranty	$	770.00
4.19.3	3 Year / 5,000 Hour Powertrain Warranty	$	900.00
4.19.4	3 Year / 3,000 Hour Powertrain + Hydraulics + Technology Warranty	$	1,050.00
4.19.5	3 Year / 4,000 Hour Powertrain + Hydraulics + Technology Warranty	$	1,350.00
4.19.6	3 Year / 5,000 Hour Powertrain + Hydraulics + Technology Warranty	$	1,560.00
4.19.7	3 Year - 3,000 Hour Premier Warranty	$	1,680.00
4.19.8	3 Year - 4,000 Hour Premier Warranty	$	2,150.00
4.19.9	3 Year - 5,000 Hour Premier Warranty	$	2,480.00
4.19.10	4 Year / 3,000 Hour Powertrain Warranty	$	710.00
4.19.11	4 Year / 4,000 Hour Powertrain Warranty	$	1,290.00
4.19.12	4 Year / 5,000 Hour Powertrain Warranty	$	1,430.00
4.19.13	4 Year / 3,000 Hour Powertrain + Hydraulics + Technology Warranty	$	1,210.00
4.19.14	4 Year / 4,000 Hour Powertrain + Hydraulics + Technology Warranty	$	2,230.00
4.19.15	4 Year / 5,000 Hour Powertrain + Hydraulics + Technology Warranty	$	2,530.00
4.19.16	4 Year - 3,000 Hour Premier Warranty	$	1,940.00
4.19.17	4 Year - 4,000 Hour Premier Warranty	$	3,570.00
4.19.18	4 Year - 5,000 Hour Premier Warranty	$	4,040.00
4.19.19	5 Year / 3,000 Hour Powertrain Warranty	$	820.00
4.19.20	5 Year / 4,000 Hour Powertrain Warranty	$	1,470.00
4.19.21	5 Year / 5,000 Hour Powertrain Warranty	$	2,280.00
4.19.22	5 Year / 3,000 Hour Powertrain + Hydraulics + Technology Warranty	$	1,400.00
4.19.23	5 Year / 4,000 Hour Powertrain + Hydraulics + Technology Warranty	$	2,520.00
4.19.24	5Year / 5,000 Hour Powertrain + Hydraulics + Technology Warranty	$	3,930.00
4.19.25	5 Year - 3,000 Hour Premier Warranty	$	2,240.00
4.19.26	5 Year - 4,000 Hour Premier Warranty	$	4,030.00
4.19.27	5 Year - 5,000 Hour Premier Warranty	$	6,300.00
4.19.28	6 Year / 3,000 Hour Powertrain Warranty	$	930.00
4.19.29	6 Year / 4,000 Hour Powertrain Warranty	$	1,640.00
4.19.30	6 Year / 5,000 Hour Powertrain Warranty	$	2,550.00
4.19.31	6 Year / 3,000 Hour Powertrain + Hydraulics + Technology Warranty	$	1,600.00
4.19.32	6 Year / 4,000 Hour Powertrain + Hydraulics + Technology Warranty	$	2,840.00
4.19.33	6Year / 5,000 Hour Powertrain + Hydraulics + Technology Warranty	$	4,390.00
4.19.34	6 Year - 3,000 Hour Premier Warranty	$	2,570.00
4.19.35	6 Year - 4,000 Hour Premier Warranty	$	4,550.00
4.19.36	6 Year - 5,000 Hour Premier Warranty	$	7,030.00
4.19.37	7 Year / 3,000 Hour Powertrain Warranty	$	1,060.00
4.19.38	7 Year / 4,000 Hour Powertrain Warranty	$	1,850.00
4.19.39	7 Year / 5,000 Hour Powertrain Warranty	$	2,840.00
4.19.40	7 Year / 3,000 Hour Powertrain + Hydraulics + Technology Warranty	$	1,830.00
4.19.41	7 Year / 4,000 Hour Powertrain + Hydraulics + Technology Warranty	$	3,190.00
4.19.42	7Year / 5,000 Hour Powertrain + Hydraulics + Technology Warranty	$	4,910.00
4.19.43	7 Year - 3,000 Hour Premier Warranty	$	2,920.00
4.19.44	7 Year - 4,000 Hour Premier Warranty	$	5,110.00
4.19.45	7 Year - 5,000 Hour Premier Warranty	$	7,850.00
4.19.46	*does not include travel charges		
4.19.47	*see attached warranty statement		
4.20	**NEW EQUIPMENT RENTAL PROGRAM**		
	If rental programs are available on the new equipment offered, with the option to purchase, list the hourly/weekly/monthly rental rate. Indicate the percent of rental fee paid by the purchaser that will be applied to the purchase price. See Solicitation Special Terms & Conditions.		
	Hourly Rental Rate:		$24.00
	Weekly Rental Rate:		$400.00
	Monthly Rental Rate:		$1,200.00
	Percent (%) of Rental Fee applied to purchase price:		100%
	If the new rental equipment is purchased and finance Charges are applicable for the actual rental term only. State the actual interest rate here: _____Prime + 3%_____		
4.21	**VENDOR OWNED RENTAL RETURN OR DEMO EQUIPMENT PROGRAM** (See Solicitation Special Terms and Conditions.) **DEDUCT** cost per Used Hour from the original Contract Price		$9.00
4.22	**DELIVERY STARTING POINT - City, State, Zip**		Nearest Ziegler Location
	(See Special Terms and Conditions - no flat rate allowed.) **Price Per Loaded Mile:**		$3.00
4.23	**INSTALLATION - PER HOUR (Hourly Shop Rate):** Installation services may be requested on an "as needed" basis - see special terms and conditions.)		$138.00
4.24	**PRICE FOR ADDITIONAL MANUALS** (1 of each included at no cost, per specs)		
	ADDITIONAL SERVICE MANUAL		
	Digital	$	50.00
	Paper	$	950.00
	ADDITIONAL PARTS MANUAL		
	Digital	$	50.00
	Paper	$	50.00
	PRICE FOR ADDITIONAL OPERATIONS MANUAL		
	Digital	$	50.00
	Paper	$	50.00
4.25	**DISCOUNT OFF LIST PRICE FOR RELATED PARTS & ACCESSORIES** (See Special Terms and Conditions)		%

T-631
Tractors: Skid Steers Attachments
727-1019

Skid Steer / Compact Track Loaders

FIXED PRICING
(BASE UNIT INFORMATION)
Specification 3.0

October, 2019

Vendor Name:	**Ziegler Inc.**
Contact Person:	**Cory Dalbec, Chris Rice**
Street Address:	**901 West 94th Street**
P.O. Box:	
City, State, Zip	**Bloomington, MN 55420**
Phone #:	**952.888.4121**
Toll Free #:	**800.352.2812**
Email Address:	**cory.dalbec@zieglercat.com, chris.rice@zieglercat.com**
Website:	www.zieglercat.com

Spec #	Information Requested	Answer
3.1	**MAKE AND MODEL**	Caterpillar 272D3XE
	Engine Type and SAE net HP	Caterpillar C3.8 DIT (Turbo) 106HP
	Tier	Tier 4 Final
	Length w/o attachments	127.0"
	Height with operator cab	84"
	Ground clearance	10.4"
	Maximum height to bucket hinge pin	128.6"
	Breakout force	7,362 lb
	Reach at maximum height	13.5"
	Dump angle at maximum height	51 Degrees
	Dump height with standard bucket	97.4"
	Front clearance circle with standard bucket	90.6"
	Rear clearance circle	74.7"
	Tipping load - SAE rated	7,400 lb
	Rated operating capacity - SAE	3,700 lb
	Standard bucket capacity - SAE heaped rating	.82 CYD
	Operating weight - SAE rated	9,573 lb
	Travel speed	10.3 mph (Two Speed)
	Fuel tank capacity	31.7 gal
	Cold weather starting assist	Glow Plugs
	Battery CCA	1,000 CCA
	Alternator size - amps	100 amps
	Transmission type	Hydrostatic
	Tire / Track size / width	Tires, 14 X 17.5 14 PR Cat, XD 74"
	Final drive chains and drive method	#100 pre-stressed chain Direct sprocket to chain drive
	Final drive chain adjustment / maintenance	500 Hours
	Gauges / instrumentation	Gauges: fuel level, hour meter Instrumentation: Engine coolant temperature, engine oil pressure, hydraulic oil temperature
	Pump type - GPM and PSI	Piston - Standard Flow 23 GPM & 3,335 psi - High Flow 40 GPM & 4,061 psi
	Control valves	Hydraulic 3 section
	Hydraulic oil cooler	Included - air to oil
	Drive controls	Electro/Hydraulic - hand controls
	Lift and tilt controls	Electro/Hydraulic - hand controls
	Engine speed control	Both foot and hand control
	Work lights - front	Included 2 each
	Work lights - rear	Included 2 each
	Warranty	2 years / unlimited hours full machine
	BASE UNIT PRICE:	$ 61,620.00

SKID / COMPACT TRACK LOADER
OPTIONS - FIXED PRICING
SPECIFICATION 4.0

Spec #	Description	Price
	Price for base unit:	$ 61,620.00
4.1	**Skid/Compact Track Loader Options:** Use this section to offer additional skid/track loader options such as hand controls, gauges, heater, enclosed cab etc.. These options should be for skid steer power unit and not attachments.	
4.1.1	PRESSURIZED CAB, HEATER/DEFROSTER, AIR CONDITIONING & DOOR	INCLUDED
4.1.2	AIR SUSPENSION SEAT-CLOTH	INCLUDED
4.1.3	ELECTRIC WORK TOOL CONTROL	INCLUDED
4.1.4	TWO SPEED CONTROL	INCLUDED
4.1.5	HYDRAULIC COUPLER	INCLUDED
4.1.6	MANUAL COUPLER	$ (680.00)
4.1.7	RIDE CONTROL	INCLUDED
4.1.8	HIGH FLOW HYDRAULICS w/DUAL SELF LEVEL	INCLUDED
4.1.9	DOOR, CAB, POLYCARBONATE	INCLUDED
4.1.10	RADIO AM-FM, CD, BLUETOOTH	INCLUDED
4.1.11	ADVANCED DISPLAY WITH BACKUP CAMERA	INCLUDED
4.1.12	PROPORTIONAL HYDRAULICS	INCLUDED
4.1.13	HEAVY DUTY BATTERY W/DISCONNECT	INCLUDED
4.1.14	LIGHTS LED	INCLUDED
4.1.15	BEACON LIGHT	$ 150.00
4.1.16	RETURN TO DIG/ WORKTOOL POSITIONER	INCLUDED
4.1.17	COUNTERWEIGHT, MACHINE EXTERNAL	$ 1,050.00
4.1.18	SINGLE EYE LIFTING POINT	$ 1,200.00
4.1.19	LIFTING EYE 4 POINT	$ 130.00
4.1.20	FOPS, LEVEL 2	$ 2,700.00
4.1.21	PRODUCT LINK, CELLULAR, PL240	INCLUDED
4.1.22	OIL, HYDRAULIC, COLD OPERATION	$ 450.00
4.1.23	PATTERN CHANGER	$ 750.00
4.1.24	CASE DEDICATED CONTROLS	$ 100.00
4.1.25	PAINT, CUSTOM	$ 1,260.00
4.1.26	REVERSING FAN	INCLUDED
4.1.27	MANUAL COUPLER	$ (1,320.00)
4.1.28	REAR LIGHTS, STOP/TAIL/TURN	$ 540.00
4.1.29	ROADING LIGHTS	$ 680.00
4.1.30	PRODUCT LINK, CELLULAR, PL641	$ 320.00
4.1.31	MOUNTING, FIRE EXTINGUISHER	$ 290.00
4.1.32	HEATER, ENGINE COOLANT, 120V	$ 140.00
4.1.33	CORRISION INHIBITOR - EquipCoat Spray / Clear Coat	$ 2,500.00
4.1.34	TIRES, 14 X 17.5 14PR CAT XD - 74" WIDTH	INCLUDED
4.1.35	TIRES, 14 X 17.5 14PR CAT - 76" WIDTH	$ (370.00)
4.2	**Bucket Options:** Use this section to offer bucket options such as standard, snow or combination buckets, etc..	
4.2.1	BUCKET-GENERAL PURPOSE, BOLT ON CUTTING EDGE 62"	$ 1,130.00
4.2.2	BUCKET-GENERAL PURPOSE, BOLT ON CUTTING EDGE 68"	$ 1,230.00
4.2.3	BUCKET-GENERAL PURPOSE, BOLT ON CUTTING EDGE 74"	$ 1,360.00
4.2.4	BUCKET-GENERAL PURPOSE, BOLT ON CUTTING EDGE 80"	$ 1,440.00
4.2.5	BUCKET-GENERAL PURPOSE, BOLT ON CUTTING EDGE 86"	$ 1,540.00
4.2.6	BUCKET-LIGHT MATERIAL, BOLT ON CUTTING EDGE 74"	$ 1,390.00
4.2.7	BUCKET-LIGHT MATERIAL, BOLT ON CUTTING EDGE 80"	$ 1,490.00
4.2.8	BUCKET-LIGHT MATERIAL, BOLT ON CUTTING EDGE 86" (1.1 CU. YD.)	$ 1,600.00
4.2.9	BUCKET-LIGHT MATERIAL, BOLT ON CUTTING EDGE 86" (1.4 CU. YD.)	$ 1,780.00
4.2.10	BUCKET-LIGHT MATERIAL, BOLT ON CUTTING EDGE 98"	$ 1,800.00
4.2.11	BUCKET-LIGHT MATERIAL, BOLT ON CUTTING EDGE 104"	$ 1,870.00
4.2.12	BUCKET-LOW PROFILE, BOLT ON CUTTING EDGE 56"	$ 740.00
4.2.13	BUCKET-LOW PROFILE, BOLT ON CUTTING EDGE 62"	$ 850.00
4.2.14	BUCKET-LOW PROFILE, BOLT ON CUTTING EDGE 68"	$ 950.00
4.2.15	BUCKET-LOW PROFILE, BOLT ON CUTTING EDGE 74"	$ 1,050.00
4.2.16	BUCKET-LOW PROFILE, BOLT ON CUTTING EDGE 80"	$ 1,160.00
4.2.17	BUCKET-MULTI-PURPOSE, BOLT ON CUTTING EDGE W/SG, 62"	$ 3,030.00
4.2.18	BUCKET-MULTI-PURPOSE, BOLT ON TEETH W/SG 62"	$ 3,030.00
4.2.19	BUCKET-MULTI-PURPOSE, W/BO EDGE 68" W/SG	$ 3,290.00
4.2.20	BUCKET-MULTI-PURPOSE, BOLT ON TEETH 68" W/SG	$ 3,290.00
4.2.21	BUCKET-MULTI-PURPOSE, BOLT ON CUTTING EDGE 74" W/SG	$ 3,540.00
4.2.22	BUCKET-MULTI-PURPOSE, BOLT ON TEETH 74" W/SG	$ 3,540.00
4.2.23	BUCKET-MULTI-PURPOSE, BOLT ON CUTTING EDGE 80" W/SG	$ 3,800.00
4.2.24	BUCKET-MULTI-PURPOSE, BOLT ON TEETH 80" W/SG	$ 3,800.00
4.2.25	BUCKET-MULTI-PURPOSE, BOLT ON CUTTING EDGE 86" W/SG	$ 4,050.00
4.2.26	BUCKET-MULTI-PURPOSE, BOLT ON TEETH 86" W/SG	$ 4,050.00
4.2.27	BUCKET-TOOTH, BOLT ON TEETH 62"	$ 1,180.00
4.2.28	BUCKET-TOOTH, BOLT ON TEETH 68"	$ 1,270.00
4.2.29	BUCKET-TOOTH, BOLT ON TEETH 74"	$ 1,360.00
4.2.30	BUCKET-TOOTH, BOLT ON TEETH 80"	$ 1,470.00
4.2.31	BUCKET-TOOTH, BOLT ON TEETH 86"	$ 1,560.00
4.2.32	BUCKET-UTILITY, BOLT ON CUTTING EDGE 62"	$ 1,030.00
4.2.33	BUCKET-UTILITY, BOLT ON CUTTING EDGE 68"	$ 1,130.00
4.2.34	BUCKET-UTILITY, BOLT ON CUTTING EDGE 74"	$ 1,230.00

SKID / COMPACT TRACK LOADER
OPTIONS - FIXED PRICING
SPECIFICATION 4.0

Spec #	Description	Price
4.3	**Overtire tracks:**	
	Use this section to offer overtire tracks.	
4.4	**Forks:**	
	Use this section to offer fork options, such as pallet forks, bale handler, etc..	
4.4.1	FORKS, 48" PALLET W/ CARRIAGE	$ 710.00
4.4.2	FORKS, 66" INDUSTRIAL GRAPPLE	$ 4,640.00
4.4.3	FORKS, 72" INDUSTRIAL GRAPPLE	$ 5,540.00
4.5	**Adaptor Plate:**	
	Use this section to offer adaptor plate options.	
	Universal Adapter Plate	$ 220.00
4.6	**Snowblower:**	
	Use this section to offer snowblower options.	
4.6.1	SR115 SNOW BLOWER, 60" WORKING WIDTH, 20-23 GPM HYDRAULIC FLOW	$ 6,990.00
4.6.2	SR118 SNOW BLOWER, 72" WORKING WIDTH, 20-23 GPM HYDRAULIC FLOW	$ 7,100.00
4.6.3	SR121 SNOW BLOWER, 85" WORKING WIDTH, 20-23 GPM HYDRAULIC FLOW	$ 7,200.00
4.6.4	SR318 SNOW BLOWER, 72" WORKING WIDTH, 31-33 GPM HYDRAULIC FLOW	$ 7,470.00
4.6.5	SR321 SNOW BLOWER, 85" WORKING WIDTH, 31-33 GPM HYDRAULIC FLOW	$ 7,950.00
4.7	**Sweeper:**	
	Use this section to offer sweeper options.	
4.7.1	BA118C, MANUAL ANGLE, 83" WIDTH	$ 5,970.00
4.7.2	BA118C, HYDRAULIC ANGLE, 83" WIDTH	$ 7,120.00
4.7.3	BP115C, PICKUP BROOM	$ 5,530.00
4.7.4	BP118C, PICKUP BROOM	$ 5,940.00
4.7.5	BU115, UTILITY BROOM	$ 3,770.00
4.7.6	BU118, UTILITY BROOM	$ 4,100.00
4.8	**Backhoe:**	
	Use this section to offer backhoe options.	
4.8.1	BACKHOE, BH150 (INCLUDES D SERIES MOUNTING BRACKET AND 24" BUCKET).	$ 14,830.00
4.8.2	BACKHOE, BH160 W/ AUXILIARY (INCLUDES D SERIES MOUNTING BRACKET AND 24" BUCKET).	$ 15,280.00
4.9	**Planer:**	
	Use this section to offer planer options.	
4.9.1	COLD PLANER, PC104B, 14" WORKING WIDTH, 16-21 GPM REQUIRED HYDRAULIC FLOW	$ 10,000.00
4.9.2	COLD PLANER, PC205B, 18" WORKING WIDTH, 21-31 GPM REQUIRED HYDRAULIC FLOW	$ 12,550.00
4.9.3	COLD PLANER, PC305B, 18" WORKING WIDTH, 26-33 GPM REQUIRED HYDRAULIC FLOW	$ 15,400.00
4.9.4	COLD PLANER, PC306B, 24" WORKING WIDTH, 26-33 GPM REQUIRED HYDRAULIC FLOW	$ 16,510.00
4.9.5	COLD PLANER, PC408B, 30" WORKING WIDTH, 40 GPM REQUIRED HYDRAULIC FLOW	$ 19,490.00
4.9.6	COLD PLANER, PC310B, 39" WORKING WIDTH, 33 GPM REQUIRED HYDRAULIC FLOW	$ 23,010.00
4.9.7	COLD PLANER, PC412, 47" WORKING WIDTH, 40 GPM REQUIRED HYDRAULIC FLOW	$ 25,560.00
4.10	**Snow Plow:**	
	Use this section to offer snow plow options.	
4.10.1	SNOW PLOW, 72"	$ 3,580.00
4.10.2	SNOW PLOW, 84"	$ 3,780.00
4.10.3	SNOW PLOW, 96"	$ 3,980.00
4.10.4	SNOW PLOW, 108"	$ 4,240.00
4.10.5	SNOW PLOW, 120"	$ 4,780.00
4.10.6	SNOW PUSH, SSL, STD DTY 8'	$ 2,520.00
4.10.7	SNOW PUSH, SSL, STD DTY 10'	$ 2,970.00
4.10.8	SNOW PUSH, SSL, STD DTY 12'	$ 3,530.00
4.11	**Hydraulic breaker:**	
	Use this section to offer hydraulic breaker options.	
4.11.1	H55S HAMMER WITH SSL MOUNTS	$ 7,850.00
4.11.2	H65S HAMMER WITH SSL MOUNTS	$ 9,230.00
4.11.3	B4 HAMMER, NON-SILENCED WITH SSL MOUNTS	$ 4,390.00
4.11.4	B4S HAMMER, SILENCED WITH SSL MOUNTS	$ 4,880.00
4.11.5	B6S HAMMER, SILENCED WITH SSL MOUNTS	$ 7,100.00
4.11.6	B6S HAMMER, NON-SILENCED WITH SSL MOUNTS	$ 6,390.00
4.11.7	B8S HAMMER, SILENCED WITH SSL MOUNTS	$ 9,430.00
4.11.8	B8 HAMMER, NON-SILENCED WITH SSL MOUNTS	$ 8,490.00
4.12	**Grapple:**	
	Use this section to offer grapple options.	
4.12.1	BUCKET, UTILITY GRAPPLE 68"	$ 2,430.00
4.12.2	BUCKET, UTILITY GRAPPLE 74"	$ 2,530.00
4.12.3	BUCKET, INDUSTRIAL GRAPPLE 62"	$ 3,590.00
4.12.4	BUCKET, INDUSTRIAL GRAPPLE 68"	$ 3,760.00
4.12.5	BUCKET, INDUSTRIAL GRAPPLE 74"	$ 4,210.00
4.12.6	BUCKET, INDUSTRIAL GRAPPLE 80"	$ 4,640.00
4.12.7	GRAPPLE RAKE 72"	$ 3,140.00
4.12.8	GRAPPLE RAKE 84"	$ 3,510.00
4.13	**Landscape:**	
	Use this section to offer landscape options.	
4.13.1	BRUSHCUTTER, BR160, 60"	$ 4,700.00
4.13.2	BRUSHCUTTER, BR166, 66"	$ 4,910.00
4.13.3	BRUSHCUTTER, BR172, 72"	$ 5,130.00
4.13.4	BRUSHCUTTER, BR272, 72" HF	$ 5,350.00
4.13.5	BRUSHCUTTER, BR378, 78" HF,XPS	$ 6,440.00
4.13.6	BRUSHCUTTER, BRX118 72"	$ 11,850.00
4.13.7	BRUSHCUTTER, BRX318 72", HF, XPS	$ 12,170.00
4.13.8	BRUSHCUTTER, BRX418	$ 12,170.00
4.13.9	LANDSCAPE RAKE, LR15B	$ 5,910.00
4.13.10	LANDSCAPE RAKE, LR18B	$ 6,330.00
4.13.11	LANDSCAPE TILLER, LT13B	$ 4,180.00
4.13.12	LANDSCAPE TILLER, LT18B	$ 4,740.00
4.13.13	MULCHER, HM112C, 49", 16-18 GPM REQUIRED HYDRAULIC FLOW	$ 19,330.00
4.13.14	MULCHER, HM115C, 58", 20-23 GPM REQUIRED HYDRAULIC FLOW	$ 20,330.00
4.13.15	MULCHER, HM215C, 58", 25-31 GPM REQUIRED HYDRAULIC FLOW	$ 21,080.00
4.13.16	MULCHER, HM315C, 58", 31-33 GPM REQUIRED HYDRAULIC FLOW	$ 27,830.00
4.13.17	MULCHER, HM415C, 58.6", 36-41 GPM REQUIRED HYDRAULIC FLOW	$ 30,300.00
4.13.18	MULCHER, HM418C, 67.2", 40-41 GPM REQUIRED HYDRAULIC FLOW	$ 32,230.00
4.13.19	POWER BOX RAKE-HYDRAULIC,PR172	$ 8,620.00
4.13.20	POWER BOX RAKE-HYDRAULIC,PR184	$ 9,120.00
4.13.21	POWER BOX RAKE-HYDRAULIC,PR190	$ 9,830.00
4.13.22	POWER BOX RAKE-MANUAL, PR172	$ 7,910.00
4.13.23	POWER BOX RAKE-MANUAL, PR184	$ 8,190.00
4.13.24	STUMP GRINDER, SG16B	$ 6,370.00
4.13.25	STUMP GRINDER, SG18B	$ 7,370.00
4.13.26	TRENCHER, T6B, 36" BOOM LENGTH	$ 4,610.00
4.13.27	TRENCHER, T9B, 48" BOOM LENGTH	$ 4,880.00
4.13.28	TRENCHER, T15B 6", 60" BOOM LENGTH	$ 6,250.00

SKID / COMPACT TRACK LOADER
OPTIONS - FIXED PRICING
SPECIFICATION 4.0

Spec #	Description	Price
4.14	**Grader:**	
	Use this section to offer grader options.	
4.14.1	BB121, 84", GRADING BOX, INCLUDES TECHNOLOGY AND INSTALLATION.	$ 15,890.00
4.14.2	BB124, 96", GRADING BOX, INCLUDES TECHNOLOGY AND INSTALLATION.	$ 16,200.00
4.14.3	BLADE, DOZER, 6-WAY, 79"	$ 5,070.00
4.14.4	BLADE, DOZER, 6-WAY, 92"	$ 5,570.00
4.15	**Auger:**	
	Use this section to offer auger options.	
4.15.1	AUGER, A14B	$ 1,900.00
4.15.2	AUGER, A19B	$ 2,250.00
4.15.3	AUGER, A26B, HF	$ 3,620.00
4.15.4	BIT, AUGER 6"	$ 290.00
4.15.5	BIT, AUGER 9"	$ 380.00
4.15.6	BIT, AUGER 12"	$ 480.00
4.15.7	BIT, AUGER 15" STANDARD	$ 580.00
4.15.8	BIT, AUGER 18"	$ 670.00
4.15.9	BIT, AUGER 24"	$ 860.00
4.15.10	BIT, AUGER 30"	$ 1,050.00
4.15.11	BIT, AUGER 36"	$ 1,230.00
4.15.12	BIT, AUGER 6" INDUSTRIAL	$ 400.00
4.15.13	BIT, AUGER 9" INDUSTRIAL	$ 490.00
4.15.14	BIT, AUGER 12" INDUSTRIAL	$ 580.00
4.15.15	BIT, AUGER 16" INDUSTRIAL	$ 700.00
4.15.16	BIT, AUGER 18" INDUSTRIAL	$ 770.00
4.15.17	BIT, AUGER 24" INDUSTRIAL	$ 1,130.00
4.15.18	TREE BIT, AUGER 24"	$ 760.00
4.15.19	TREE BIT, AUGER 36"	$ 1,190.00
4.15.20	ADAPTER, AUGER - HEX TO ROUND	$ 140.00
4.15.21	ADAPTER, AUGER - ROUND TO HEX	$ 120.00
4.15.22	EXTENSION, TELESCOPING 3'	$ 280.00
4.15.23	EXTENSION, TELESCOPING 6'	$ 470.00
4.15.24	EXTENSION, AUGER 12"	$ 120.00
4.15.25	EXTENSION, AUGER 24"	$ 170.00
4.16	**Wheel saw:**	
	Use this section to offer wheel saw options.	
4.16.1	WHEEL SAW, SW345B, 3"	$ 19,340.00
4.16.2	WHEEL SAW, SW360B, 3"	$ 21,910.00
4.16.3	WHEEL SAW, SW360B, 6"	$ 22,270.00
4.16.4	WHEEL SAW, SW360B, 8"	$ 23,320.00
4.16.5	WHEEL SAW, SW460B, 3"	$ 22,270.00
4.16.6	WHEEL SAW, SW460, 6"	$ 22,940.00
4.16.7	WHEEL SAW, SW460, 8"	$ 23,320.00
4.16.8	WHEEL SAW, SW380B, 10"	$ 30,810.00

SKID / COMPACT TRACK LOADER
OPTIONS - FIXED PRICING
SPECIFICATION 4.0

Spec #	Description		Price
4.17	**Vibratory roller:**		
	Use this section to offer vibratory roller options.		
4.17.1	CV16B, VIBRATORY COMPACTOR	$	9,470.00
4.17.2	CV18B, VIBRATORY COMPACTOR	$	10,150.00
4.18	**Other:**		
	Use this section to offer any other option not already covered.		
4.18.1	S305, SSL SHEARS - 9.4" JAW OPENING	$	23,510.00
4.18.2	MATERIAL HANDLING ARM, 84", 2,000 LB. CAPACITY	$	1,320.00
4.18.3	MB200, MIXING BUCKET	$	5,510.00
4.18.4	MB250, MIXING BUCKET	$	5,770.00
4.19	**EXTENDED WARRANTY OPTIONS**		
	Use this section to offer performance/warranty options, number these items starting with 20.1, 20.2, 20.3, etc. **(Specify years, miles or hours extended term covers.)**		
4.19.1	3 Year / 3,000 Hour Powertrain Warranty	$	610.00
4.19.2	3 Year / 4,000 Hour Powertrain Warranty	$	770.00
4.19.3	3 Year / 5,000 Hour Powertrain Warranty	$	900.00
4.19.4	3 Year / 3,000 Hour Powertrain + Hydraulics + Technology Warranty	$	1,050.00
4.19.5	3 Year / 4,000 Hour Powertrain + Hydraulics + Technology Warranty	$	1,350.00
4.19.6	3 Year / 5,000 Hour Powertrain + Hydraulics + Technology Warranty	$	1,560.00
4.19.7	3 Year - 3,000 Hour Premier Warranty	$	1,680.00
4.19.8	3 Year - 4,000 Hour Premier Warranty	$	2,150.00
4.19.9	3 Year - 5,000 Hour Premier Warranty	$	2,480.00
4.19.10	4 Year / 3,000 Hour Powertrain Warranty	$	710.00
4.19.11	4 Year / 4,000 Hour Powertrain Warranty	$	1,290.00
4.19.12	4 Year / 5,000 Hour Powertrain Warranty	$	1,430.00
4.19.13	4 Year / 3,000 Hour Powertrain + Hydraulics + Technology Warranty	$	1,210.00
4.19.14	4 Year / 4,000 Hour Powertrain + Hydraulics + Technology Warranty	$	2,230.00
4.19.15	4 Year / 5,000 Hour Powertrain + Hydraulics + Technology Warranty	$	2,530.00
4.19.16	4 Year - 3,000 Hour Premier Warranty	$	1,940.00
4.19.17	4 Year - 4,000 Hour Premier Warranty	$	3,570.00
4.19.18	4 Year - 5,000 Hour Premier Warranty	$	4,040.00
4.19.19	5 Year / 3,000 Hour Powertrain Warranty	$	820.00
4.19.20	5 Year / 4,000 Hour Powertrain Warranty	$	1,470.00
4.19.21	5 Year / 5,000 Hour Powertrain Warranty	$	2,280.00
4.19.22	5 Year / 3,000 Hour Powertrain + Hydraulics + Technology Warranty	$	1,400.00
4.19.23	5 Year / 4,000 Hour Powertrain + Hydraulics + Technology Warranty	$	2,520.00
4.19.24	5Year / 5,000 Hour Powertrain + Hydraulics + Technology Warranty	$	3,930.00
4.19.25	5 Year - 3,000 Hour Premier Warranty	$	2,240.00
4.19.26	5 Year - 4,000 Hour Premier Warranty	$	4,030.00
4.19.27	5 Year - 5,000 Hour Premier Warranty	$	6,300.00
4.19.28	6 Year / 3,000 Hour Powertrain Warranty	$	930.00
4.19.29	6 Year / 4,000 Hour Powertrain Warranty	$	1,640.00
4.19.30	6 Year / 5,000 Hour Powertrain Warranty	$	2,550.00
4.19.31	6 Year / 3,000 Hour Powertrain + Hydraulics + Technology Warranty	$	1,600.00
4.19.32	6 Year / 4,000 Hour Powertrain + Hydraulics + Technology Warranty	$	2,840.00
4.19.33	6Year / 5,000 Hour Powertrain + Hydraulics + Technology Warranty	$	4,390.00
4.19.34	6 Year - 3,000 Hour Premier Warranty	$	2,570.00
4.19.35	6 Year - 4,000 Hour Premier Warranty	$	4,550.00
4.19.36	6 Year - 5,000 Hour Premier Warranty	$	7,030.00
4.19.37	7 Year / 3,000 Hour Powertrain Warranty	$	1,060.00
4.19.38	7 Year / 4,000 Hour Powertrain Warranty	$	1,850.00
4.19.39	7 Year / 5,000 Hour Powertrain Warranty	$	2,840.00
4.19.40	7 Year / 3,000 Hour Powertrain + Hydraulics + Technology Warranty	$	1,830.00
4.19.41	7 Year / 4,000 Hour Powertrain + Hydraulics + Technology Warranty	$	3,190.00
4.19.42	7Year / 5,000 Hour Powertrain + Hydraulics + Technology Warranty	$	4,910.00
4.19.43	7 Year - 3,000 Hour Premier Warranty	$	2,920.00
4.19.44	7 Year - 4,000 Hour Premier Warranty	$	5,110.00
4.19.45	7 Year - 5,000 Hour Premier Warranty	$	7,850.00
4.19.46	*does not include travel charges		
4.19.47	*see attached warranty statement		
4.20	**NEW EQUIPMENT RENTAL PROGRAM**		
	If rental programs are available on the new equipment offered, with the option to purchase, list the hourly/weekly/monthly rental rate. Indicate the percent of rental fee paid by the purchaser that will be applied to the purchase price. See Solicitation Special Terms & Conditions.		
	Hourly Rental Rate:		$25.00
	Weekly Rental Rate:		$450.00
	Monthly Rental Rate:		$1,350.00
	Percent (%) of Rental Fee applied to purchase price:		100%
	If the new rental equipment is purchased and finance		
	Charges are applicable for the actual rental term only.		
	State the actual interest rate here: _____Prime + 3%_____		
4.21	**VENDOR OWNED RENTAL RETURN OR DEMO EQUIPMENT PROGRAM**		
	(See Solicitation Special Terms and Conditions.) **DEDUCT** cost per Used Hour from the original Contract Price		$11.00
4.22	**DELIVERY STARTING POINT - City, State, Zip**		Nearest Ziegler Location
	(See Special Terms and Conditions - no flat rate allowed.) **Price Per Loaded Mile:**		$3.00
4.23	**INSTALLATION - PER HOUR (Hourly Shop Rate):**		
	Installation services may be requested on an "as needed" basis - see special terms and conditions.)		$138.00
4.24	**PRICE FOR ADDITIONAL MANUALS** (1 of each included at no cost, per specs)		
	ADDITIONAL SERVICE MANUAL		
	Digital	$	50.00
	Paper	$	950.00
	ADDITIONAL PARTS MANUAL		
	Digital	$	50.00
	Paper	$	50.00
	PRICE FOR ADDITIONAL OPERATIONS MANUAL		
	Digital	$	50.00
	Paper	$	50.00
4.25	**DISCOUNT OFF LIST PRICE FOR RELATED PARTS & ACCESSORIES**		%
	(See Special Terms and Conditions)		

T-631
Tractors: Skid Steers Attachments
 # 727-1019

Skid Steer / Compact Track Loaders

FIXED PRICING
(BASE UNIT INFORMATION)
Specification 3.0

October, 2019

Vendor Name:	**Ziegler Inc.**
Contact Person:	**Cory Dalbec, Chris Rice**
Street Address:	**901 West 94th Street**
P.O. Box:	
City, State, Zip	**Bloomington, MN 55420**
Phone #:	**952.888.4121**
Toll Free #:	**800.352.2812**
Email Address:	**cory.dalbec@zieglercat.com, chris.rice@zieglercat.com**
Website:	www.zieglercat.com

Spec #	Information Requested	Answer
3.1	**MAKE AND MODEL**	Caterpillar 279D3
	Engine Type and SAE net HP	Caterpillar C3.3B DIT 72.9 HP
	Tier	Tier 4 Final
	Length w/o attachments	117.9 in
	Height with operator cab	83.2 in
	Ground clearance	8.9 in
	Maximum height to bucket hinge pin	124.9 in
	Breakout force	7,285 lbs.
	Reach at maximum height	22.6 in.
	Dump angle at maximum height	39 degrees
	Dump height with standard bucket	97.8 in.
	Front clearance circle with standard bucket	88.8 in.
	Rear clearance circle	70.7 in.
	Tipping load - SAE rated	6,345 lbs.
	Rated operating capacity - SAE	3,390 lbs.
	Standard bucket capacity - SAE heaped rating	.62 cu yd
	Operating weight - SAE rated	10,095 lbs.
	Travel speed	1 speed 4.5 mph/ 2 speed 8.3 mph
	Fuel tank capacity	27.7 gallons
	Cold weather starting assist	Glow Plugs
	Battery CCA	850
	Alternator size - amps	80
	Transmission type	Hydrostatic
	Tire / Track size / width	17.7" Rubber Track Bar
	Final drive chains and drive method	Drive sprocket to track drive
	Final drive chain adjustment / maintenance	Not required
	Gauges / instrumentation	Gauges: fuel level, hour meter Instrumentation: Engine coolant temperature, engine oil pressure, hydraulic oil temperature
	Pump type - GPM and PSI	Piston/23 GPM/3335 PSI
	Control valves	Hydraulic 3 section
	Hydraulic oil cooler	Included - air to oil
	Drive controls	Electro/Hydraulic - hand controls
	Lift and tilt controls	Electro/Hydraulic - hand controls
	Engine speed control	Both foot and hand control
	Work lights - front	Included 2 each
	Work lights - rear	Included 2 each
	Warranty	2 year Unlimited hour parts/labor
	BASE UNIT PRICE:	$ 62,110.00

SKID / COMPACT TRACK LOADER
OPTIONS - FIXED PRICING
SPECIFICATION 4.0

Spec #	Description	Price
	Price for base unit:	$ 62,110.00
4.1	**Skid/Compact Track Loader Options:** Use this section to offer additional skid/track loader options such as hand controls, gauges, heater, enclosed cab etc.. These options should be for skid steer power unit and not attachments.	
4.1.1	PRESSURIZED CAB, HEATER/DEFROSTER & DOOR	$ (1,430.00)
4.1.2	PRESSURIZED CAB, HEATER/DEFROSTER, AIR CONDITIONING & DOOR	INCLUDED
4.1.3	OPEN ROPS	$ (3,110.00)
4.1.4	AIR SUSPENSION SEAT-VINYL	$ (20.00)
4.1.5	AIR SUSPENSION SEAT-CLOTH	INCLUDED
4.1.6	PROPORTIONAL WORK TOOL CONTROL	INCLUDED
4.1.7	HAND & FOOT CONTROLS	$ 290.00
4.1.8	TWO SPEED CONTROL	INCLUDED
4.1.9	HYDRAULIC COUPLER	INCLUDED
4.1.10	FAN, COOLING, DEMAND	INCLUDED
4.1.11	FAN, COOLING, DEMAND, REVERSING	$ 590.00
4.1.12	RIDE CONTROL	$ 730.00
4.1.13	HIGH FLOW HYDRAULICS	$ 3,190.00
4.1.14	DOOR, CAB, POLYCARBONATE	$ 150.00
4.1.15	DOOR, CAB, GLASS	
4.1.16	RADIO AM-FM, CD, BLUETOOTH	INCLUDED
4.1.17	ADVANCED DISPLAY WITH BACKUP CAMERA	INCLUDED
4.1.18	PROPORTIONAL HYDRAULICS	$ (280.00)
4.1.19	DUAL SELF-LEVELING	INCLUDED
4.1.20	HEAVY DUTY BATTERY W/DISCONNECT	$ 90.00
4.1.21	EXTRA HEAVY DUTY BATTERY W/DISCONNECT	$ 150.00
4.1.22	LIGHTS LED	INCLUDED
4.1.23	HALOGEN LIGHTS	$ (200.00)
4.1.24	BEACON LIGHT	$ 160.00
4.1.25	REAR LIGHTS	$ -
4.1.26	REAR LIGHTS, STOP/TAIL/TURN	$ 550.00
4.1.27	ROADING LIGHTS	$ 690.00
4.1.28	SEAT BELT, 2"	INCLUDED
4.1.29	SEAT BELT, 3"	$ 200.00
4.1.30	RETURN TO DIG/ WORKTOOL POSITIONER	INCLUDED
4.1.31	COUNTERWEIGHT, MACHINE EXTERNAL	$ 720.00
4.1.32	MOUNTING, FIRE EXTINGUISHER	$ 290.00
4.1.33	SINGLE EYE LIFTING POINT	$ 1,200.00
4.1.34	LIFTING EYE 4 POINT	$ 140.00
4.1.35	FOPS, LEVEL 2	$ 2,700.00
4.1.36	HEATER, ENGINE COOLANT, 120V	$ 140.00
4.1.37	PRODUCT LINK, CELLULAR, PL243	INCLUDED
4.1.38	PRODUCT LINK, CELLULAR, PL641	$ 330.00
4.1.39	OIL, HYDRAULIC, COLD OPERATION	$ 470.00
4.1.40	PATTERN CHANGER	$ 750.00
4.1.41	CASE DEDICATED CONTROLS	$ 100.00
4.1.42	PAINT, CUSTOM	$ 1,460.00
4.1.43	CORRISION INHIBITOR - EquipCoat Spray / Clear Coat	$ 2,500.00
4.1.44	DUAL/SINGLE IDLER	$ (720.00)
4.1.45	TRIPLE FLANGE IDLERS	INCLUDED
4.1.46	TRACK, RUBBER, 17.7 IN (400MM) BLOCK TREAD	$ (50.00)
4.1.47	TRACK, RUBBER, 17.7 IN (400MM) BAR TREAD	INCLUDED
4.2	**Bucket Options:** Use this section to offer bucket options such as standard, snow or combination buckets, etc..	
4.2.1	BUCKET-GENERAL PURPOSE, BOLT ON CUTTING EDGE 62"	$ 1,130.00
4.2.2	BUCKET-GENERAL PURPOSE, BOLT ON CUTTING EDGE 68"	$ 1,230.00
4.2.3	BUCKET-GENERAL PURPOSE, BOLT ON CUTTING EDGE 74"	$ 1,360.00
4.2.4	BUCKET-GENERAL PURPOSE, BOLT ON CUTTING EDGE 80"	$ 1,440.00
4.2.5	BUCKET-GENERAL PURPOSE, BOLT ON CUTTING EDGE 86"	$ 1,540.00
4.2.6	BUCKET-LIGHT MATERIAL, BOLT ON CUTTING EDGE 74"	$ 1,390.00
4.2.7	BUCKET-LIGHT MATERIAL, BOLT ON CUTTING EDGE 80"	$ 1,490.00
4.2.8	BUCKET-LIGHT MATERIAL, BOLT ON CUTTING EDGE 86" (1.1 CU. YD.)	$ 1,600.00
4.2.9	BUCKET-LIGHT MATERIAL, BOLT ON CUTTING EDGE 86" (1.4 CU. YD.)	$ 1,780.00
4.2.10	BUCKET-LIGHT MATERIAL, BOLT ON CUTTING EDGE 98"	$ 1,800.00
4.2.11	BUCKET-LIGHT MATERIAL, BOLT ON CUTTING EDGE 104"	$ 1,870.00
4.2.12	BUCKET-LOW PROFILE, BOLT ON CUTTING EDGE 56"	$ 740.00
4.2.13	BUCKET-LOW PROFILE, BOLT ON CUTTING EDGE 62"	$ 850.00
4.2.14	BUCKET-LOW PROFILE, BOLT ON CUTTING EDGE 68"	$ 950.00
4.2.15	BUCKET-LOW PROFILE, BOLT ON CUTTING EDGE 74"	$ 1,050.00
4.2.16	BUCKET-LOW PROFILE, BOLT ON CUTTING EDGE 80"	$ 1,160.00
4.2.17	BUCKET-MULTI-PURPOSE, BOLT ON CUTTING EDGE W/SG, 62"	$ 3,030.00
4.2.18	BUCKET-MULTI-PURPOSE, BOLT ON TEETH W/SG 62"	$ 3,030.00
4.2.19	BUCKET-MULTI-PURPOSE, W/BO EDGE 68" W/SG	$ 3,290.00
4.2.20	BUCKET-MULTI-PURPOSE, BOLT ON TEETH 68" W/SG	$ 3,290.00
4.2.21	BUCKET-MULTI-PURPOSE, BOLT ON CUTTING EDGE 74" W/SG	$ 3,540.00
4.2.22	BUCKET-MULTI-PURPOSE, BOLT ON TEETH 74" W/SG	$ 3,540.00
4.2.23	BUCKET-MULTI-PURPOSE, BOLT ON CUTTING EDGE 80" W/SG	$ 3,800.00
4.2.24	BUCKET-MULTI-PURPOSE, BOLT ON TEETH 80" W/SG	$ 3,800.00
4.2.25	BUCKET-MULTI-PURPOSE, BOLT ON CUTTING EDGE 86" W/SG	$ 4,050.00
4.2.26	BUCKET-MULTI-PURPOSE, BOLT ON TEETH 86" W/SG	$ 4,050.00
4.2.27	BUCKET-TOOTH, BOLT ON TEETH 62"	$ 1,180.00
4.2.28	BUCKET-TOOTH, BOLT ON TEETH 68"	$ 1,270.00
4.2.29	BUCKET-TOOTH, BOLT ON TEETH 74"	$ 1,360.00
4.2.30	BUCKET-TOOTH, BOLT ON TEETH 80"	$ 1,470.00
4.2.31	BUCKET-TOOTH, BOLT ON TEETH 86"	$ 1,560.00
4.2.32	BUCKET-UTILITY, BOLT ON CUTTING EDGE 62"	$ 1,030.00
4.2.33	BUCKET-UTILITY, BOLT ON CUTTING EDGE 68"	$ 1,130.00
4.2.34	BUCKET-UTILITY, BOLT ON CUTTING EDGE 74"	$ 1,230.00

SKID / COMPACT TRACK LOADER
OPTIONS - FIXED PRICING
SPECIFICATION 4.0

Spec #	Description	Price
4.3	**Overtire tracks:**	
	Use this section to offer overtire tracks.	
4.4	**Forks:**	
	Use this section to offer fork options, such as pallet forks, bale handler, etc..	
4.4.1	FORKS, 48" PALLET W/ CARRIAGE	$ 710.00
4.4.2	FORKS, 66" INDUSTRIAL GRAPPLE	$ 4,640.00
4.4.3	FORKS, 72" INDUSTRIAL GRAPPLE	$ 5,540.00
4.5	**Adaptor Plate:**	
	Use this section to offer adaptor plate options.	
	Universal Adapter Plate	$ 220.00
4.6	**Snowblower:**	
	Use this section to offer snowblower options.	
4.6.1	SR115 SNOW BLOWER, 60" WORKING WIDTH, 20-23 GPM HYDRAULIC FLOW	$ 6,990.00
4.6.2	SR118 SNOW BLOWER, 72" WORKING WIDTH, 20-23 GPM HYDRAULIC FLOW	$ 7,100.00
4.6.3	SR121 SNOW BLOWER, 85" WORKING WIDTH, 20-23 GPM HYDRAULIC FLOW	$ 7,200.00
4.6.4	SR318 SNOW BLOWER, 72" WORKING WIDTH, 31-33 GPM HYDRAULIC FLOW	$ 7,470.00
4.6.5	SR321 SNOW BLOWER, 85" WORKING WIDTH, 31-33 GPM HYDRAULIC FLOW	$ 7,950.00
4.7	**Sweeper:**	
	Use this section to offer sweeper options.	
4.7.1	BA118C, MANUAL ANGLE, 83" WIDTH	$ 5,970.00
4.7.2	BA118C, HYDRAULIC ANGLE, 83" WIDTH	$ 7,120.00
4.7.3	BP115C, PICKUP BROOM	$ 5,530.00
4.7.4	BP118C, PICKUP BROOM	$ 5,940.00
4.7.5	BU115, UTILITY BROOM	$ 3,770.00
4.7.6	BU118, UTILITY BROOM	$ 4,100.00
4.8	**Backhoe:**	
	Use this section to offer backhoe options.	
4.8.1	BACKHOE, BH150 (INCLUDES D SERIES MOUNTING BRACKET AND 24" BUCKET).	$ 14,830.00
4.8.2	BACKHOE, BH160 W/ AUXILIARY (INCLUDES D SERIES MOUNTING BRACKET AND 24" BUCKET).	$ 15,280.00
4.9	**Planer:**	
	Use this section to offer planer options.	
4.9.1	COLD PLANER, PC104B, 14" WORKING WIDTH, 16-21 GPM REQUIRED HYDRAULIC FLOW	$ 10,000.00
4.9.2	COLD PLANER, PC205B, 18" WORKING WIDTH, 21-31 GPM REQUIRED HYDRAULIC FLOW	$ 12,550.00
4.9.3	COLD PLANER, PC305B, 18" WORKING WIDTH, 26-33 GPM REQUIRED HYDRAULIC FLOW	$ 15,400.00
4.9.4	COLD PLANER, PC306B, 24" WORKING WIDTH, 26-33 GPM REQUIRED HYDRAULIC FLOW	$ 16,510.00
4.9.5	COLD PLANER, PC408B, 30" WORKING WIDTH, 40 GPM REQUIRED HYDRAULIC FLOW	$ 19,490.00
4.9.6	COLD PLANER, PC310B, 39" WORKING WIDTH, 33 GPM REQUIRED HYDRAULIC FLOW	$ 23,010.00
4.9.7	COLD PLANER, PC412, 47" WORKING WIDTH, 40 GPM REQUIRED HYDRAULIC FLOW	$ 25,560.00
4.10	**Snow Plow:**	
	Use this section to offer snow plow options.	
4.10.1	SNOW PLOW, 72"	$ 3,580.00
4.10.2	SNOW PLOW, 84"	$ 3,780.00
4.10.3	SNOW PLOW, 96"	$ 3,980.00
4.10.4	SNOW PLOW, 108"	$ 4,240.00
4.10.5	SNOW PLOW, 120"	$ 4,780.00
4.10.6	SNOW PUSH, SSL, STD DTY 8'	$ 2,520.00
4.10.7	SNOW PUSH, SSL, STD DTY 10'	$ 2,970.00
4.10.8	SNOW PUSH, SSL, STD DTY 12'	$ 3,530.00
4.11	**Hydraulic breaker:**	
	Use this section to offer hydraulic breaker options.	
4.11.1	H55S HAMMER WITH SSL MOUNTS	$ 7,850.00
4.11.2	H65S HAMMER WITH SSL MOUNTS	$ 9,230.00
4.11.3	B4 HAMMER, NON-SILENCED WITH SSL MOUNTS	$ 4,390.00
4.11.4	B4S HAMMER, SILENCED WITH SSL MOUNTS	$ 4,880.00
4.11.5	B6S HAMMER, SILENCED WITH SSL MOUNTS	$ 7,100.00
4.11.6	B6S HAMMER, NON-SILENCED WITH SSL MOUNTS	$ 6,390.00
4.11.7	B8S HAMMER, SILENCED WITH SSL MOUNTS	$ 9,430.00
4.11.8	B8 HAMMER, NON-SILENCED WITH SSL MOUNTS	$ 8,490.00
4.12	**Grapple:**	
	Use this section to offer grapple options.	
4.12.1	BUCKET, UTILITY GRAPPLE 68"	$ 2,430.00
4.12.2	BUCKET, UTILITY GRAPPLE 74"	$ 2,530.00
4.12.3	BUCKET, INDUSTRIAL GRAPPLE 62"	$ 3,590.00
4.12.4	BUCKET, INDUSTRIAL GRAPPLE 68"	$ 3,760.00
4.12.5	BUCKET, INDUSTRIAL GRAPPLE 74"	$ 4,210.00
4.12.6	BUCKET, INDUSTRIAL GRAPPLE 80"	$ 4,640.00
4.12.7	GRAPPLE RAKE 72"	$ 3,140.00
4.12.8	GRAPPLE RAKE 84"	$ 3,510.00
4.13	**Landscape:**	
	Use this section to offer landscape options.	
4.13.1	BRUSHCUTTER, BR160, 60"	$ 4,700.00
4.13.2	BRUSHCUTTER, BR166, 66"	$ 4,910.00
4.13.3	BRUSHCUTTER, BR172, 72"	$ 5,130.00
4.13.4	BRUSHCUTTER, BR272, 72" HF	$ 5,350.00
4.13.5	BRUSHCUTTER, BR378, 78" HF,XPS	$ 6,440.00
4.13.6	BRUSHCUTTER, BRX118 72"	$ 11,850.00
4.13.7	BRUSHCUTTER, BRX318 72", HF, XPS	$ 12,170.00
4.13.8	BRUSHCUTTER, BRX418	$ 12,170.00
4.13.9	LANDSCAPE RAKE, LR15B	$ 5,910.00
4.13.10	LANDSCAPE RAKE, LR18B	$ 6,330.00
4.13.11	LANDSCAPE TILLER, LT13B	$ 4,180.00
4.13.12	LANDSCAPE TILLER, LT18B	$ 4,740.00
4.13.13	MULCHER, HM112C, 49", 16-18 GPM REQUIRED HYDRAULIC FLOW	$ 19,330.00
4.13.14	MULCHER, HM115C, 58", 20-23 GPM REQUIRED HYDRAULIC FLOW	$ 20,330.00
4.13.15	MULCHER, HM215C, 58", 25-31 GPM REQUIRED HYDRAULIC FLOW	$ 21,080.00
4.13.16	MULCHER, HM315C, 58", 31-33 GPM REQUIRED HYDRAULIC FLOW	$ 27,830.00
4.13.17	MULCHER, HM415C, 58.6", 36-41 GPM REQUIRED HYDRAULIC FLOW	$ 30,300.00
4.13.18	MULCHER, HM418C, 67.2", 40-41 GPM REQUIRED HYDRAULIC FLOW	$ 32,230.00
4.13.19	POWER BOX RAKE-HYDRAULIC,PR172	$ 8,620.00
4.13.20	POWER BOX RAKE-HYDRAULIC,PR184	$ 9,120.00
4.13.21	POWER BOX RAKE-HYDRAULIC,PR190	$ 9,830.00
4.13.22	POWER BOX RAKE-MANUAL, PR172	$ 7,910.00
4.13.23	POWER BOX RAKE-MANUAL, PR184	$ 8,190.00
4.13.24	STUMP GRINDER, SG16B	$ 6,370.00
4.13.25	STUMP GRINDER, SG18B	$ 7,370.00
4.13.26	TRENCHER, T6B, 36" BOOM LENGTH	$ 4,610.00
4.13.27	TRENCHER, T9B, 48" BOOM LENGTH	$ 4,880.00
4.13.28	TRENCHER, T15B 6", 60" BOOM LENGTH	$ 6,250.00

SKID / COMPACT TRACK LOADER
OPTIONS - FIXED PRICING
SPECIFICATION 4.0

Spec #	Description	Price
4.14	**Grader:**	
	Use this section to offer grader options.	
4.14.1	BB121, 84", GRADING BOX, INCLUDES TECHNOLOGY AND INSTALLATION.	$ 15,890.00
4.14.2	BB124, 96", GRADING BOX, INCLUDES TECHNOLOGY AND INSTALLATION.	$ 16,200.00
4.14.3	BLADE, DOZER, 6-WAY, 79"	$ 5,070.00
4.14.4	BLADE, DOZER, 6-WAY, 92"	$ 5,570.00
4.15	**Auger:**	
	Use this section to offer auger options.	
4.15.1	AUGER, A14B	$ 1,900.00
4.15.2	AUGER, A19B	$ 2,250.00
4.15.3	AUGER, A26B, HF	$ 3,620.00
4.15.4	BIT, AUGER 6"	$ 290.00
4.15.5	BIT, AUGER 9"	$ 380.00
4.15.6	BIT, AUGER 12"	$ 480.00
4.15.7	BIT, AUGER 15" STANDARD	$ 580.00
4.15.8	BIT, AUGER 18"	$ 670.00
4.15.9	BIT, AUGER 24"	$ 860.00
4.15.10	BIT, AUGER 30"	$ 1,050.00
4.15.11	BIT, AUGER 36"	$ 1,230.00
4.15.12	BIT, AUGER 6" INDUSTRIAL	$ 400.00
4.15.13	BIT, AUGER 9" INDUSTRIAL	$ 490.00
4.15.14	BIT, AUGER 12" INDUSTRIAL	$ 580.00
4.15.15	BIT, AUGER 16" INDUSTRIAL	$ 700.00
4.15.16	BIT, AUGER 18" INDUSTRIAL	$ 770.00
4.15.17	BIT, AUGER 24" INDUSTRIAL	$ 1,130.00
4.15.18	TREE BIT, AUGER 24"	$ 760.00
4.15.19	TREE BIT, AUGER 36"	$ 1,190.00
4.15.20	ADAPTER, AUGER - HEX TO ROUND	$ 140.00
4.15.21	ADAPTER, AUGER - ROUND TO HEX	$ 120.00
4.15.22	EXTENSION, TELESCOPING 3'	$ 280.00
4.15.23	EXTENSION, TELESCOPING 6'	$ 470.00
4.15.24	EXTENSION, AUGER 12"	$ 120.00
4.15.25	EXTENSION, AUGER 24"	$ 170.00
4.16	**Wheel saw:**	
	Use this section to offer wheel saw options.	
4.16.1	WHEEL SAW, SW345B, 3"	$ 19,340.00
4.16.2	WHEEL SAW, SW360B, 3"	$ 21,910.00
4.16.3	WHEEL SAW, SW360B, 6"	$ 22,270.00
4.16.4	WHEEL SAW, SW360B, 8"	$ 23,320.00
4.16.5	WHEEL SAW, SW460B, 3"	$ 22,270.00
4.16.6	WHEEL SAW, SW460, 6"	$ 22,940.00
4.16.7	WHEEL SAW, SW460, 8"	$ 23,320.00
4.16.8	WHEEL SAW, SW380B, 10"	$ 30,810.00

SKID / COMPACT TRACK LOADER
OPTIONS - FIXED PRICING
SPECIFICATION 4.0

Spec #	Description	Price
4.17	**Vibratory roller:**	
	Use this section to offer vibratory roller options.	
4.17.1	CV16B, VIBRATORY COMPACTOR	$ 9,470.00
4.17.2	CV18B, VIBRATORY COMPACTOR	$ 10,150.00
4.18	**Other:**	
	Use this section to offer any other option not already covered.	
4.18.1	S305, SSL SHEARS - 9.4" JAW OPENING	$ 23,510.00
4.18.2	MATERIAL HANDLING ARM, 84", 2,000 LB. CAPACITY	$ 1,320.00
4.18.3	MB200, MIXING BUCKET	$ 5,510.00
4.18.4	MB250, MIXING BUCKET	$ 5,770.00
4.19	**EXTENDED WARRANTY OPTIONS**	
	Use this section to offer performance/warranty options, number these items starting with 20.1, 20.2, 20.3, etc. **(Specify years, miles or hours extended term covers.)**	
4.19.1	3 Year / 3,000 Hour Powertrain Warranty	$ 980.00
4.19.2	3 Year / 4,000 Hour Powertrain Warranty	$ 1,150.00
4.19.3	3 Year / 5,000 Hour Powertrain Warranty	$ 1,320.00
4.19.4	3 Year / 3,000 Hour Powertrain + Hydraulics + Technology Warranty	$ 1,690.00
4.19.5	3 Year / 4,000 Hour Powertrain + Hydraulics + Technology Warranty	$ 2,010.00
4.19.6	3 Year / 5,000 Hour Powertrain + Hydraulics + Technology Warranty	$ 2,310.00
4.19.7	3 Year - 3,000 Hour Premier Warranty	$ 3,340.00
4.19.8	3 Year - 4,000 Hour Premier Warranty	$ 3,890.00
4.19.9	3 Year - 5,000 Hour Premier Warranty	$ 4,490.00
4.19.10	4 Year / 3,000 Hour Powertrain Warranty	$ 1,140.00
4.19.11	4 Year / 4,000 Hour Powertrain Warranty	$ 1,900.00
4.19.12	4 Year / 5,000 Hour Powertrain Warranty	$ 2,150.00
4.19.13	4 Year / 3,000 Hour Powertrain + Hydraulics + Technology Warranty	$ 2,000.00
4.19.14	4 Year / 4,000 Hour Powertrain + Hydraulics + Technology Warranty	$ 3,330.00
4.19.15	4 Year / 5,000 Hour Powertrain + Hydraulics + Technology Warranty	$ 3,780.00
4.19.16	4 Year - 3,000 Hour Premier Warranty	$ 3,880.00
4.19.17	4 Year - 4,000 Hour Premier Warranty	$ 6,460.00
4.19.18	4 Year - 5,000 Hour Premier Warranty	$ 7,330.00
4.19.19	5 Year / 3,000 Hour Powertrain Warranty	$ 1,310.00
4.19.20	5 Year / 4,000 Hour Powertrain Warranty	$ 2,150.00
4.19.21	5 Year / 5,000 Hour Powertrain Warranty	$ 3,350.00
4.19.22	5 Year / 3,000 Hour Powertrain + Hydraulics + Technology Warranty	$ 2,300.00
4.19.23	5 Year / 4,000 Hour Powertrain + Hydraulics + Technology Warranty	$ 3,770.00
4.19.24	5Year / 5,000 Hour Powertrain + Hydraulics + Technology Warranty	$ 5,870.00
4.19.25	5 Year - 3,000 Hour Premier Warranty	$ 4,460.00
4.19.26	5 Year - 4,000 Hour Premier Warranty	$ 7,310.00
4.19.27	5 Year - 5,000 Hour Premier Warranty	$ 11,400.00
4.19.46	*does not include travel charges	
4.19.47	*see attached warranty statement	

4.20 NEW EQUIPMENT RENTAL PROGRAM

If rental programs are available on the new equipment offered, with the option to purchase, list the hourly/weekly/monthly rental rate. Indicate the percent of rental fee paid by the purchaser that will be applied to the purchase price. See Solicitation Special Terms & Conditions.

Hourly Rental Rate:	$30.00
Weekly Rental Rate:	$1,100.00
Monthly Rental Rate:	$3,300.00
Percent (%) of Rental Fee applied to purchase price:	100%

If the new rental equipment is purchased and finance

Charges are applicable for the actual rental term only.

State the actual interest rate here: Prime + 3%

4.21 VENDOR OWNED RENTAL RETURN OR DEMO EQUIPMENT PROGRAM

(See Solicitation Special Terms and Conditions.)

DEDUCT cost per Used Hour from the original Contract Price: $16.00

4.22 DELIVERY STARTING POINT - City, State, Zip: Nearest Ziegler Location

(See Special Terms and Conditions - no flat rate allowed.) **Price Per Loaded Mile:** $3.00

4.23 INSTALLATION - PER HOUR (Hourly Shop Rate):

Installation services may be requested on an "as needed" basis - see special terms and conditions.) $138.00

4.24 PRICE FOR ADDITIONAL MANUALS (1 of each included at no cost, per specs)

ADDITIONAL SERVICE MANUAL		
	Digital	$ 50.00
	Paper	$ 950.00
ADDITIONAL PARTS MANUAL		
	Digital	$ 50.00
	Paper	$ 50.00
PRICE FOR ADDITIONAL OPERATIONS MANUAL		
	Digital	$ 50.00
	Paper	$ 50.00

4.25 DISCOUNT OFF LIST PRICE FOR RELATED PARTS & ACCESSORIES %

(See Special Terms and Conditions)

T-631
Tractors: Skid Steers Attachments
727-1019

Skid Steer / Compact Track Loaders

FIXED PRICING
(BASE UNIT INFORMATION)
Specification 3.0

October, 2019

Vendor Name:	**Ziegler Inc.**
Contact Person:	**Cory Dalbec, Chris Rice**
Street Address:	**901 West 94th Street**
P.O. Box:	
City, State, Zip	**Bloomington, MN 55420**
Phone #:	**952.888.4121**
Toll Free #:	**800.352.2812**
Email Address:	**cory.dalbec@zieglercat.com, chris.rice@zieglercat.com**
Website:	www.zieglercat.com

Spec #	Information Requested	Answer
3.1	**MAKE AND MODEL**	Caterpillar 289D3
	Engine Type and SAE net HP	Caterpillar C3.3B DIT 72.9 HP
	Tier	Tier 4 Final
	Length w/o attachments	117.9 in
	Height with operator cab	83.2 in
	Ground clearance	8.9 in
	Maximum height to bucket hinge pin	125.1 in
	Breakout force	7,291 lbs.
	Reach at maximum height	30 in.
	Dump angle at maximum height	51 degrees
	Dump height with standard bucket	94 in.
	Front clearance circle with standard bucket	88.8 in.
	Rear clearance circle	70.7 in.
	Tipping load - SAE rated	8,255 lbs.
	Rated operating capacity - SAE	4,370 lbs.
	Standard bucket capacity - SAE heaped rating	.62 cu yd
	Operating weight - SAE rated	10,688 lbs.
	Travel speed	1 speed 4.5 mph/ 2 speed 8.3 mph
	Fuel tank capacity	27.7 gallons
	Cold weather starting assist	Glow Plugs
	Battery CCA	850
	Alternator size - amps	80
	Transmission type	Hydrostatic
	Tire / Track size / width	17.7" Rubber Track Bar
	Final drive chains and drive method	Drive sprocket to track drive
	Final drive chain adjustment / maintenance	Not required
	Gauges / instrumentation	Gauges: fuel level, hour meter Instrumentation: Engine coolant temperature, engine oil pressure, hydraulic oil temperature
	Pump type - GPM and PSI	Piston/23 GPM/3335 PSI
	Control valves	Hydraulic 3 section
	Hydraulic oil cooler	Included - air to oil
	Drive controls	Electro/Hydraulic - hand controls
	Lift and tilt controls	Electro/Hydraulic - hand controls
	Engine speed control	Both foot and hand control
	Work lights - front	Included 2 each
	Work lights - rear	Included 2 each
	Warranty	2 years / unlimited hours full machine
	BASE UNIT PRICE:	$ 64,590.00

SKID / COMPACT TRACK LOADER
OPTIONS - FIXED PRICING
SPECIFICATION 4.0

Spec #	Description	Price
	Price for base unit:	$ 64,590.00
4.1	**Skid/Compact Track Loader Options:** Use this section to offer additional skid/track loader options such as hand controls, gauges, heater, enclosed cab etc.. These options should be for skid steer power unit and not attachments.	
4.1.1	PRESSURIZED CAB, HEATER/DEFROSTER & DOOR	$ (1,430.00)
4.1.2	PRESSURIZED CAB, HEATER/DEFROSTER, AIR CONDITIONING & DOOR	INCLUDED
4.1.3	OPEN ROPS	$ (3,110.00)
4.1.4	AIR SUSPENSION SEAT-VINYL	$ (20.00)
4.1.5	AIR SUSPENSION SEAT-CLOTH	INCLUDED
4.1.6	PROPORTIONAL WORK TOOL CONTROL	INCLUDED
4.1.7	HAND & FOOT CONTROLS	$ 290.00
4.1.8	TWO SPEED CONTROL	INCLUDED
4.1.9	HYDRAULIC COUPLER	INCLUDED
4.1.10	FAN, COOLING, DEMAND	INCLUDED
4.1.11	FAN, COOLING, DEMAND, REVERSING	$ 590.00
4.1.12	RIDE CONTROL	$ 730.00
4.1.13	HIGH FLOW HYDRAULICS	$ 3,190.00
4.1.14	DOOR, CAB, POLYCARBONATE	$ 150.00
4.1.15	DOOR, CAB, GLASS	
4.1.16	RADIO AM-FM, CD, BLUETOOTH	INCLUDED
4.1.17	ADVANCED DISPLAY WITH BACKUP CAMERA	INCLUDED
4.1.18	PROPORTIONAL HYDRAULICS	$ (280.00)
4.1.19	DUAL SELF-LEVELING	INCLUDED
4.1.20	HEAVY DUTY BATTERY W/DISCONNECT	$ 90.00
4.1.21	EXTRA HEAVY DUTY BATTERY W/DISCONNECT	$ 150.00
4.1.22	LIGHTS LED	INCLUDED
4.1.23	HALOGEN LIGHTS	$ (200.00)
4.1.24	BEACON LIGHT	$ 160.00
4.1.25	REAR LIGHTS	$ -
4.1.26	REAR LIGHTS, STOP/TAIL/TURN	$ 550.00
4.1.27	ROADING LIGHTS	$ 690.00
4.1.28	SEAT BELT, 2"	INCLUDED
4.1.29	SEAT BELT, 3"	$ 200.00
4.1.30	RETURN TO DIG/ WORKTOOL POSITIONER	INCLUDED
4.1.31	COUNTERWEIGHT, MACHINE EXTERNAL	$ 720.00
4.1.32	MOUNTING, FIRE EXTINGUISHER	$ 290.00
4.1.33	SINGLE EYE LIFTING POINT	$ 1,200.00
4.1.34	LIFTING EYE 4 POINT	$ 140.00
4.1.35	FOPS, LEVEL 2	$ 2,700.00
4.1.36	HEATER, ENGINE COOLANT, 120V	$ 140.00
4.1.37	PRODUCT LINK, CELLULAR, PL243	INCLUDED
4.1.38	PRODUCT LINK, CELLULAR, PL641	$ 330.00
4.1.39	OIL, HYDRAULIC, COLD OPERATION	$ 470.00
4.1.40	PATTERN CHANGER	$ 750.00
4.1.41	CASE DEDICATED CONTROLS	$ 100.00
4.1.42	PAINT, CUSTOM	$ 1,460.00
4.1.43	CORRISION INHIBITOR - EquipCoat Spray / Clear Coat	$ 2,500.00
4.1.44	DUAL/SINGLE IDLER	$ (720.00)
4.1.45	TRIPLE FLANGE IDLERS	INCLUDED
4.1.46	TRACK, RUBBER, 17.7 IN (400MM) BLOCK TREAD	$ (50.00)
4.1.47	TRACK, RUBBER, 17.7 IN (400MM) BAR TREAD	INCLUDED
4.2	**Bucket Options:** Use this section to offer bucket options such as standard, snow or combination buckets, etc..	
4.2.1	BUCKET-GENERAL PURPOSE, BOLT ON CUTTING EDGE 62"	$ 1,130.00
4.2.2	BUCKET-GENERAL PURPOSE, BOLT ON CUTTING EDGE 68"	$ 1,230.00
4.2.3	BUCKET-GENERAL PURPOSE, BOLT ON CUTTING EDGE 74"	$ 1,360.00
4.2.4	BUCKET-GENERAL PURPOSE, BOLT ON CUTTING EDGE 80"	$ 1,440.00
4.2.5	BUCKET-GENERAL PURPOSE, BOLT ON CUTTING EDGE 86"	$ 1,540.00
4.2.6	BUCKET-LIGHT MATERIAL, BOLT ON CUTTING EDGE 74"	$ 1,390.00
4.2.7	BUCKET-LIGHT MATERIAL, BOLT ON CUTTING EDGE 80"	$ 1,490.00
4.2.8	BUCKET-LIGHT MATERIAL, BOLT ON CUTTING EDGE 86" (1.1 CU. YD.)	$ 1,600.00
4.2.9	BUCKET-LIGHT MATERIAL, BOLT ON CUTTING EDGE 86" (1.4 CU. YD.)	$ 1,780.00
4.2.10	BUCKET-LIGHT MATERIAL, BOLT ON CUTTING EDGE 98"	$ 1,800.00
4.2.11	BUCKET-LIGHT MATERIAL, BOLT ON CUTTING EDGE 104"	$ 1,870.00
4.2.12	BUCKET-LOW PROFILE, BOLT ON CUTTING EDGE 56"	$ 740.00
4.2.13	BUCKET-LOW PROFILE, BOLT ON CUTTING EDGE 62"	$ 850.00
4.2.14	BUCKET-LOW PROFILE, BOLT ON CUTTING EDGE 68"	$ 950.00
4.2.15	BUCKET-LOW PROFILE, BOLT ON CUTTING EDGE 74"	$ 1,050.00
4.2.16	BUCKET-LOW PROFILE, BOLT ON CUTTING EDGE 80"	$ 1,160.00
4.2.17	BUCKET-MULTI-PURPOSE, BOLT ON CUTTING EDGE W/SG, 62"	$ 3,030.00
4.2.18	BUCKET-MULTI-PURPOSE, BOLT ON TEETH W/SG 62"	$ 3,030.00
4.2.19	BUCKET-MULTI-PURPOSE, W/BO EDGE 68" W/SG	$ 3,290.00
4.2.20	BUCKET-MULTI-PURPOSE, BOLT ON TEETH 68" W/SG	$ 3,290.00
4.2.21	BUCKET-MULTI-PURPOSE, BOLT ON CUTTING EDGE 74" W/SG	$ 3,540.00
4.2.22	BUCKET-MULTI-PURPOSE, BOLT ON TEETH 74" W/SG	$ 3,540.00
4.2.23	BUCKET-MULTI-PURPOSE, BOLT ON CUTTING EDGE 80" W/SG	$ 3,800.00
4.2.24	BUCKET-MULTI-PURPOSE, BOLT ON TEETH 80" W/SG	$ 3,800.00
4.2.25	BUCKET-MULTI-PURPOSE, BOLT ON CUTTING EDGE 86" W/SG	$ 4,050.00
4.2.26	BUCKET-MULTI-PURPOSE, BOLT ON TEETH 86" W/SG	$ 4,050.00
4.2.27	BUCKET-TOOTH, BOLT ON TEETH 62"	$ 1,180.00
4.2.28	BUCKET-TOOTH, BOLT ON TEETH 68"	$ 1,270.00
4.2.29	BUCKET-TOOTH, BOLT ON TEETH 74"	$ 1,360.00
4.2.30	BUCKET-TOOTH, BOLT ON TEETH 80"	$ 1,470.00
4.2.31	BUCKET-TOOTH, BOLT ON TEETH 86"	$ 1,560.00
4.2.32	BUCKET-UTILITY, BOLT ON CUTTING EDGE 62"	$ 1,030.00
4.2.33	BUCKET-UTILITY, BOLT ON CUTTING EDGE 68"	$ 1,130.00
4.2.34	BUCKET-UTILITY, BOLT ON CUTTING EDGE 74"	$ 1,230.00

SKID / COMPACT TRACK LOADER
OPTIONS - FIXED PRICING
SPECIFICATION 4.0

Spec #	Description	Price
4.3	**Overtire tracks:**	
	Use this section to offer overtire tracks.	
4.4	**Forks:**	
	Use this section to offer fork options, such as pallet forks, bale handler, etc..	
4.4.1	FORKS, 48" PALLET W/ CARRIAGE	$ 710.00
4.4.2	FORKS, 66" INDUSTRIAL GRAPPLE	$ 4,640.00
4.4.3	FORKS, 72" INDUSTRIAL GRAPPLE	$ 5,540.00
4.5	**Adaptor Plate:**	
	Use this section to offer adaptor plate options.	
	Universal Adapter Plate	$ 220.00
4.6	**Snowblower:**	
	Use this section to offer snowblower options.	
4.6.1	SR115 SNOW BLOWER, 60" WORKING WIDTH, 20-23 GPM HYDRAULIC FLOW	$ 6,990.00
4.6.2	SR118 SNOW BLOWER, 72" WORKING WIDTH, 20-23 GPM HYDRAULIC FLOW	$ 7,100.00
4.6.3	SR121 SNOW BLOWER, 85" WORKING WIDTH, 20-23 GPM HYDRAULIC FLOW	$ 7,200.00
4.6.4	SR318 SNOW BLOWER, 72" WORKING WIDTH, 31-33 GPM HYDRAULIC FLOW	$ 7,470.00
4.6.5	SR321 SNOW BLOWER, 85" WORKING WIDTH, 31-33 GPM HYDRAULIC FLOW	$ 7,950.00
4.7	**Sweeper:**	
	Use this section to offer sweeper options.	
4.7.1	BA118C, MANUAL ANGLE, 83" WIDTH	$ 5,970.00
4.7.2	BA118C, HYDRAULIC ANGLE, 83" WIDTH	$ 7,120.00
4.7.3	BP115C, PICKUP BROOM	$ 5,530.00
4.7.4	BP118C, PICKUP BROOM	$ 5,940.00
4.7.5	BU115, UTILITY BROOM	$ 3,770.00
4.7.6	BU118, UTILITY BROOM	$ 4,100.00
4.8	**Backhoe:**	
	Use this section to offer backhoe options.	
4.8.1	BACKHOE, BH150 (INCLUDES D SERIES MOUNTING BRACKET AND 24" BUCKET).	$ 14,830.00
4.8.2	BACKHOE, BH160 W/ AUXILIARY (INCLUDES D SERIES MOUNTING BRACKET AND 24" BUCKET).	$ 15,280.00
4.9	**Planer:**	
	Use this section to offer planer options.	
4.9.1	COLD PLANER, PC104B, 14" WORKING WIDTH, 16-21 GPM REQUIRED HYDRAULIC FLOW	$ 10,000.00
4.9.2	COLD PLANER, PC205B, 18" WORKING WIDTH, 21-31 GPM REQUIRED HYDRAULIC FLOW	$ 12,550.00
4.9.3	COLD PLANER, PC305B, 18" WORKING WIDTH, 26-33 GPM REQUIRED HYDRAULIC FLOW	$ 15,400.00
4.9.4	COLD PLANER, PC306B, 24" WORKING WIDTH, 26-33 GPM REQUIRED HYDRAULIC FLOW	$ 16,510.00
4.9.5	COLD PLANER, PC408B, 30" WORKING WIDTH, 40 GPM REQUIRED HYDRAULIC FLOW	$ 19,490.00
4.9.6	COLD PLANER, PC310B, 39" WORKING WIDTH, 33 GPM REQUIRED HYDRAULIC FLOW	$ 23,010.00
4.9.7	COLD PLANER, PC412, 47" WORKING WIDTH, 40 GPM REQUIRED HYDRAULIC FLOW	$ 25,560.00
4.10	**Snow Plow:**	
	Use this section to offer snow plow options.	
4.10.1	SNOW PLOW, 72"	$ 3,580.00
4.10.2	SNOW PLOW, 84"	$ 3,780.00
4.10.3	SNOW PLOW, 96"	$ 3,980.00
4.10.4	SNOW PLOW, 108"	$ 4,240.00
4.10.5	SNOW PLOW, 120"	$ 4,780.00
4.10.6	SNOW PUSH, SSL, STD DTY 8'	$ 2,520.00
4.10.7	SNOW PUSH, SSL, STD DTY 10'	$ 2,970.00
4.10.8	SNOW PUSH, SSL, STD DTY 12'	$ 3,530.00
4.11	**Hydraulic breaker:**	
	Use this section to offer hydraulic breaker options.	
4.11.1	H55S HAMMER WITH SSL MOUNTS	$ 7,850.00
4.11.2	H65S HAMMER WITH SSL MOUNTS	$ 9,230.00
4.11.3	B4 HAMMER, NON-SILENCED WITH SSL MOUNTS	$ 4,390.00
4.11.4	B4S HAMMER, SILENCED WITH SSL MOUNTS	$ 4,880.00
4.11.5	B6S HAMMER, SILENCED WITH SSL MOUNTS	$ 7,100.00
4.11.6	B6S HAMMER, NON-SILENCED WITH SSL MOUNTS	$ 6,390.00
4.11.7	B8S HAMMER, SILENCED WITH SSL MOUNTS	$ 9,430.00
4.11.8	B8 HAMMER, NON-SILENCED WITH SSL MOUNTS	$ 8,490.00
4.12	**Grapple:**	
	Use this section to offer grapple options.	
4.12.1	BUCKET, UTILITY GRAPPLE 68"	$ 2,430.00
4.12.2	BUCKET, UTILITY GRAPPLE 74"	$ 2,530.00
4.12.3	BUCKET, INDUSTRIAL GRAPPLE 62"	$ 3,590.00
4.12.4	BUCKET, INDUSTRIAL GRAPPLE 68"	$ 3,760.00
4.12.5	BUCKET, INDUSTRIAL GRAPPLE 74"	$ 4,210.00
4.12.6	BUCKET, INDUSTRIAL GRAPPLE 80"	$ 4,640.00
4.12.7	GRAPPLE RAKE 72"	$ 3,140.00
4.12.8	GRAPPLE RAKE 84"	$ 3,510.00

SKID / COMPACT TRACK LOADER
OPTIONS - FIXED PRICING
SPECIFICATION 4.0

Spec #	Description	Price
4.13	**Landscape:**	
	Use this section to offer landscape options.	
4.13.1	BRUSHCUTTER, BR160, 60"	$ 4,700.00
4.13.2	BRUSHCUTTER, BR166, 66"	$ 4,910.00
4.13.3	BRUSHCUTTER, BR172, 72"	$ 5,130.00
4.13.4	BRUSHCUTTER, BR272, 72" HF	$ 5,350.00
4.13.5	BRUSHCUTTER, BR378, 78" HF,XPS	$ 6,440.00
4.13.6	BRUSHCUTTER, BRX118 72"	$ 11,850.00
4.13.7	BRUSHCUTTER, BRX318 72", HF, XPS	$ 12,170.00
4.13.8	BRUSHCUTTER, BRX418	$ 12,170.00
4.13.9	LANDSCAPE RAKE, LR15B	$ 5,910.00
4.13.10	LANDSCAPE RAKE, LR18B	$ 6,330.00
4.13.11	LANDSCAPE TILLER, LT13B	$ 4,180.00
4.13.12	LANDSCAPE TILLER, LT18B	$ 4,740.00
4.13.13	MULCHER, HM112C, 49", 16-18 GPM REQUIRED HYDRAULIC FLOW	$ 19,330.00
4.13.14	MULCHER, HM115C, 58", 20-23 GPM REQUIRED HYDRAULIC FLOW	$ 20,330.00
4.13.15	MULCHER, HM215C, 58", 25-31 GPM REQUIRED HYDRAULIC FLOW	$ 21,080.00
4.13.16	MULCHER, HM315C, 58", 31-33 GPM REQUIRED HYDRAULIC FLOW	$ 27,830.00
4.13.17	MULCHER, HM415C, 58.6", 36-41 GPM REQUIRED HYDRAULIC FLOW	$ 30,300.00
4.13.18	MULCHER, HM418C, 67.2", 40-41 GPM REQUIRED HYDRAULIC FLOW	$ 32,230.00
4.13.19	POWER BOX RAKE-HYDRAULIC,PR172	$ 8,620.00
4.13.20	POWER BOX RAKE-HYDRAULIC,PR184	$ 9,120.00
4.13.21	POWER BOX RAKE-HYDRAULIC,PR190	$ 9,830.00
4.13.22	POWER BOX RAKE-MANUAL, PR172	$ 7,910.00
4.13.23	POWER BOX RAKE-MANUAL, PR184	$ 8,190.00
4.13.24	STUMP GRINDER, SG16B	$ 6,370.00
4.13.25	STUMP GRINDER, SG18B	$ 7,370.00
4.13.26	TRENCHER, T6B, 36" BOOM LENGTH	$ 4,610.00
4.13.27	TRENCHER, T9B, 48" BOOM LENGTH	$ 4,880.00
4.13.28	TRENCHER, T15B 6", 60" BOOM LENGTH	$ 6,250.00
4.14	**Grader:**	
	Use this section to offer grader options.	
4.14.1	BB121, 84", GRADING BOX, INCLUDES TECHNOLOGY AND INSTALLATION.	$ 15,890.00
4.14.2	BB124, 96", GRADING BOX, INCLUDES TECHNOLOGY AND INSTALLATION.	$ 16,200.00
4.14.3	BLADE, DOZER, 6-WAY, 79"	$ 5,070.00
4.14.4	BLADE, DOZER, 6-WAY, 92"	$ 5,570.00
4.15	**Auger:**	
	Use this section to offer auger options.	
4.15.1	AUGER, A14B	$ 1,900.00
4.15.2	AUGER, A19B	$ 2,250.00
4.15.3	AUGER, A26B, HF	$ 3,620.00
4.15.4	BIT, AUGER 6"	$ 290.00
4.15.5	BIT, AUGER 9"	$ 380.00
4.15.6	BIT, AUGER 12"	$ 480.00
4.15.7	BIT, AUGER 15" STANDARD	$ 580.00
4.15.8	BIT, AUGER 18"	$ 670.00
4.15.9	BIT, AUGER 24"	$ 860.00
4.15.10	BIT, AUGER 30"	$ 1,050.00
4.15.11	BIT, AUGER 36"	$ 1,230.00
4.15.12	BIT, AUGER 6" INDUSTRIAL	$ 400.00
4.15.13	BIT, AUGER 9" INDUSTRIAL	$ 490.00
4.15.14	BIT, AUGER 12" INDUSTRIAL	$ 580.00
4.15.15	BIT, AUGER 16" INDUSTRIAL	$ 700.00
4.15.16	BIT, AUGER 18" INDUSTRIAL	$ 770.00
4.15.17	BIT, AUGER 24" INDUSTRIAL	$ 1,130.00
4.15.18	TREE BIT, AUGER 24"	$ 760.00
4.15.19	TREE BIT, AUGER 36"	$ 1,190.00
4.15.20	ADAPTER, AUGER - HEX TO ROUND	$ 140.00
4.15.21	ADAPTER, AUGER - ROUND TO HEX	$ 120.00
4.15.22	EXTENSION, TELESCOPING 3'	$ 280.00
4.15.23	EXTENSION, TELESCOPING 6'	$ 470.00
4.15.24	EXTENSION, AUGER 12"	$ 120.00
4.15.25	EXTENSION, AUGER 24"	$ 170.00

SKID / COMPACT TRACK LOADER
OPTIONS - FIXED PRICING
SPECIFICATION 4.0

Spec #	Description	Price
4.16	**Wheel saw:**	
	Use this section to offer wheel saw options.	
4.16.1	WHEEL SAW, SW345B, 3"	$ 19,340.00
4.16.2	WHEEL SAW, SW360B, 3"	$ 21,910.00
4.16.3	WHEEL SAW, SW360B, 6"	$ 22,270.00
4.16.4	WHEEL SAW, SW360B, 8"	$ 23,320.00
4.16.5	WHEEL SAW, SW460B, 3"	$ 22,270.00
4.16.6	WHEEL SAW, SW460, 6"	$ 22,940.00
4.16.7	WHEEL SAW, SW460, 8"	$ 23,320.00
4.16.8	WHEEL SAW, SW380B, 10"	$ 30,810.00
4.17	**Vibratory roller:**	
	Use this section to offer vibratory roller options.	
4.17.1	CV16B, VIBRATORY COMPACTOR	$ 9,470.00
4.17.2	CV18B, VIBRATORY COMPACTOR	$ 10,150.00
4.18	**Other:**	
	Use this section to offer any other option not already covered.	
4.18.1	S305, SSL SHEARS - 9.4" JAW OPENING	$ 23,510.00
4.18.2	MATERIAL HANDLING ARM, 84", 2,000 LB. CAPACITY	$ 1,320.00
4.18.3	MB200, MIXING BUCKET	$ 5,510.00
4.18.4	MB250, MIXING BUCKET	$ 5,770.00
4.19	**EXTENDED WARRANTY OPTIONS**	
	Use this section to offer performance/warranty options, number these items starting with 20.1, 20.2, 20.3, etc. **(Specify years, miles or hours extended term covers.)**	
4.19.1	3 Year / 3,000 Hour Powertrain Warranty	$ 1,060.00
4.19.2	3 Year / 4,000 Hour Powertrain Warranty	$ 1,240.00
4.19.3	3 Year / 5,000 Hour Powertrain Warranty	$ 1,420.00
4.19.4	3 Year / 3,000 Hour Powertrain + Hydraulics + Technology Warranty	$ 1,820.00
4.19.5	3 Year / 4,000 Hour Powertrain + Hydraulics + Technology Warranty	$ 2,120.00
4.19.6	3 Year / 5,000 Hour Powertrain + Hydraulics + Technology Warranty	$ 2,450.00
4.19.7	3 Year - 3,000 Hour Premier Warranty	$ 3,520.00
4.19.8	3 Year - 4,000 Hour Premier Warranty	$ 4,110.00
4.19.9	3 Year - 5,000 Hour Premier Warranty	$ 4,750.00
4.19.10	4 Year / 3,000 Hour Powertrain Warranty	$ 1,230.00
4.19.11	4 Year / 4,000 Hour Powertrain Warranty	$ 2,050.00
4.19.12	4 Year / 5,000 Hour Powertrain Warranty	$ 2,330.00
4.19.13	4 Year / 3,000 Hour Powertrain + Hydraulics + Technology Warranty	$ 2,110.00
4.19.14	4 Year / 4,000 Hour Powertrain + Hydraulics + Technology Warranty	$ 3,510.00
4.19.15	4 Year / 5,000 Hour Powertrain + Hydraulics + Technology Warranty	$ 3,990.00
4.19.16	4 Year - 3,000 Hour Premier Warranty	$ 4,090.00
4.19.17	4 Year - 4,000 Hour Premier Warranty	$ 6,820.00
4.19.18	4 Year - 5,000 Hour Premier Warranty	$ 7,740.00
4.19.19	5 Year / 3,000 Hour Powertrain Warranty	$ 1,410.00
4.19.20	5 Year / 4,000 Hour Powertrain Warranty	$ 2,310.00
4.19.21	5 Year / 5,000 Hour Powertrain Warranty	$ 3,610.00
4.19.22	5 Year / 3,000 Hour Powertrain + Hydraulics + Technology Warranty	$ 2,440.00
4.19.23	5 Year / 4,000 Hour Powertrain + Hydraulics + Technology Warranty	$ 3,980.00
4.19.24	5Year / 5,000 Hour Powertrain + Hydraulics + Technology Warranty	$ 6,210.00
4.19.25	5 Year - 3,000 Hour Premier Warranty	$ 4,710.00
4.19.26	5 Year - 4,000 Hour Premier Warranty	$ 7,720.00
4.19.27	5 Year - 5,000 Hour Premier Warranty	$ 12,040.00
4.19.46	*does not include travel charges	
4.19.47	*see attached warranty statement	

4.20 NEW EQUIPMENT RENTAL PROGRAM

If rental programs are available on the new equipment offered, with the option to purchase, list the hourly/weekly/monthly rental rate. Indicate the percent of rental fee paid by the purchaser that will be applied to the purchase price. See Solicitation Special Terms & Conditions.

Hourly Rental Rate:	$30.00
Weekly Rental Rate:	$1,100.00
Monthly Rental Rate:	$3,300.00
Percent (%) of Rental Fee applied to purchase price:	100%

If the new rental equipment is purchased and finance

Charges are applicable for the actual rental term only.

State the actual interest rate here: _____Prime + 3%_____

4.21 VENDOR OWNED RENTAL RETURN OR DEMO EQUIPMENT PROGRAM

(See Solicitation Special Terms and Conditions.)

DEDUCT cost per Used Hour from the original Contract Price: $16.00

4.22 DELIVERY STARTING POINT - City, State, Zip: Nearest Ziegler Location

(See Special Terms and Conditions - no flat rate allowed.) **Price Per Loaded Mile:** $3.00

4.23 INSTALLATION - PER HOUR (Hourly Shop Rate):

Installation services may be requested on an "as needed" basis - see special terms and conditions.) $138.00

4.24 PRICE FOR ADDITIONAL MANUALS (1 of each included at no cost, per specs)

ADDITIONAL SERVICE MANUAL		
	Digital	$ 50.00
	Paper	$ 950.00
ADDITIONAL PARTS MANUAL		
	Digital	$ 50.00
	Paper	$ 50.00
PRICE FOR ADDITIONAL OPERATIONS MANUAL		
	Digital	$ 50.00
	Paper	$ 50.00

4.25 DISCOUNT OFF LIST PRICE FOR RELATED PARTS & ACCESSORIES %

(See Special Terms and Conditions)

T-631
Tractors: Skid Steers Attachments
 # 727-1019

Skid Steer / Compact Track Loaders

FIXED PRICING
(BASE UNIT INFORMATION)
Specification 3.0

October, 2019

Vendor Name:	**Ziegler Inc.**
Contact Person:	**Cory Dalbec, Chris Rice**
Street Address:	**901 West 94th Street**
P.O. Box:	
City, State, Zip	**Bloomington, MN 55420**
Phone #:	**952.888.4121**
Toll Free #:	**800.352.2812**
Email Address:	**cory.dalbec@zieglercat.com, chris.rice@zieglercat.com**
Website:	www.zieglercat.com

Spec #	Information Requested	Answer
3.1	**MAKE AND MODEL**	Caterpillar 299D3
	Engine Type and SAE net HP	Caterpillar C3.8 DIT (Turbo) 95 HP
	Tier	Tier 4 Final
	Length w/o attachments	125.5"
	Height with operator cab	83.6"
	Ground clearance	9.6"
	Maximum height to bucket hinge pin	126.3"
	Breakout force	7,270 lb
	Reach at maximum height	19.4"
	Dump angle at maximum height	54 Degrees
	Dump height with standard bucket	94.5"
	Front clearance circle with standard bucket	91.1"
	Rear clearance circle	74"
	Tipping load - SAE rated	9,945 lb
	Rated operating capacity - SAE	5,240 lb
	Standard bucket capacity - SAE heaped rating	.82 CYD
	Operating weight - SAE rated	11,464 lb
	Travel speed	8.4 mph Two Sped
	Fuel tank capacity	31.7 gal
	Cold weather starting assist	Glow Plugs
	Battery CCA	850 CCA
	Alternator size - amps	100 Amps
	Transmission type	Hydrostatic
	Tire / Track size / width	Track, Rubber, 17.7 IN (450MM) Bar
	Final drive chains and drive method	Drive sprocket to track drive
	Final drive chain adjustment / maintenance	Not required
	Gauges / instrumentation	Gauges: fuel level, hour meter Instrumentation: Engine coolant temperature, engine oil pressure, hydraulic oil temperature
	Pump type - GPM and PSI	Piston/23 GPM/3335 PSI
	Control valves	Hydraulic 3 section
	Hydraulic oil cooler	Included - air to oil
	Drive controls	Electro/Hydraulic - hand controls
	Lift and tilt controls	Electro/Hydraulic - hand controls
	Engine speed control	Both foot and hand control
	Work lights - front	Included 2 each
	Work lights - rear	Included 2 each
	Warranty	2 years / unlimited hours full machine
	BASE UNIT PRICE:	$ 74,330.00

SKID / COMPACT TRACK LOADER
OPTIONS - FIXED PRICING
SPECIFICATION 4.0

Spec #	Description	Price
	Price for base unit:	$ 74,330.00
4.1	**Skid/Compact Track Loader Options:** Use this section to offer additional skid/track loader options such as hand controls, gauges, heater, enclosed cab etc.. These options should be for skid steer power unit and not attachments.	
4.1.1	PRESSURIZED CAB, HEATER/DEFROSTER & DOOR	$ (1,430.00)
4.1.2	PRESSURIZED CAB, HEATER/DEFROSTER, AIR CONDITIONING & DOOR	INCLUDED
4.1.3	OPEN ROPS	$ (3,110.00)
4.1.4	AIR SUSPENSION SEAT-VINYL	$ (20.00)
4.1.5	AIR SUSPENSION SEAT-CLOTH	INCLUDED
4.1.6	PROPORTIONAL WORK TOOL CONTROL	INCLUDED
4.1.7	HAND & FOOT CONTROLS	$ 290.00
4.1.8	TWO SPEED CONTROL	INCLUDED
4.1.9	HYDRAULIC COUPLER	INCLUDED
4.1.10	FAN, COOLING, DEMAND	INCLUDED
4.1.11	FAN, COOLING, DEMAND, REVERSING	$ 590.00
4.1.12	RIDE CONTROL	$ 730.00
4.1.13	HIGH FLOW HYDRAULICS	$ 3,190.00
4.1.14	DOOR, CAB, POLYCARBONATE	$ 150.00
4.1.15	DOOR, CAB, GLASS	
4.1.16	RADIO AM-FM, CD, BLUETOOTH	INCLUDED
4.1.17	ADVANCED DISPLAY WITH BACKUP CAMERA	INCLUDED
4.1.18	PROPORTIONAL HYDRAULICS	$ (280.00)
4.1.19	DUAL SELF-LEVELING	INCLUDED
4.1.20	HEAVY DUTY BATTERY W/DISCONNECT	$ 90.00
4.1.21	EXTRA HEAVY DUTY BATTERY W/DISCONNECT	$ 150.00
4.1.22	LIGHTS LED	INCLUDED
4.1.23	HALOGEN LIGHTS	$ (200.00)
4.1.24	BEACON LIGHT	$ 160.00
4.1.25	REAR LIGHTS	$ -
4.1.26	REAR LIGHTS, STOP/TAIL/TURN	$ 550.00
4.1.27	ROADING LIGHTS	$ 690.00
4.1.28	SEAT BELT, 2"	INCLUDED
4.1.29	SEAT BELT, 3"	$ 200.00
4.1.30	RETURN TO DIG/ WORKTOOL POSITIONER	INCLUDED
4.1.31	COUNTERWEIGHT, MACHINE EXTERNAL	$ 720.00
4.1.32	MOUNTING, FIRE EXTINGUISHER	$ 290.00
4.1.33	SINGLE EYE LIFTING POINT	$ 1,200.00
4.1.34	LIFTING EYE 4 POINT	$ 140.00
4.1.35	FOPS, LEVEL 2	$ 2,700.00
4.1.36	HEATER, ENGINE COOLANT, 120V	$ 140.00
4.1.37	PRODUCT LINK, CELLULAR, PL243	INCLUDED
4.1.38	PRODUCT LINK, CELLULAR, PL641	$ 330.00
4.1.39	OIL, HYDRAULIC, COLD OPERATION	$ 470.00
4.1.40	PATTERN CHANGER	$ 750.00
4.1.41	CASE DEDICATED CONTROLS	$ 100.00
4.1.42	PAINT, CUSTOM	$ 1,460.00
4.1.43	CORRISION INHIBITOR - EquipCoat Spray / Clear Coat	$ 2,500.00
4.1.44	DUAL/SINGLE IDLER	$ (720.00)
4.1.45	TRIPLE FLANGE IDLERS	INCLUDED
4.1.46	TRACK, STEEL, 14 IN (355MM)	$ 4,420.00
4.1.47	TRACK, RUBBER, 15.7 IN (400MM) BLOCK TREAD	$ (510.00)
4.1.48	TRACK, RUBBER, 17.7 IN (400MM) BLOCK TREAD	$ (50.00)
4.1.49	TRACK, RUBBER, 17.7 IN (400MM) BAR TREAD	INCLUDED
4.1.50	DEBRIS MANAGEMENT PACKAGE (DM1)	$ 3,690.00
4.2	**Bucket Options:** Use this section to offer bucket options such as standard, snow or combination buckets, etc..	
4.2.1	BUCKET-GENERAL PURPOSE, BOLT ON CUTTING EDGE 62"	$ 1,130.00
4.2.2	BUCKET-GENERAL PURPOSE, BOLT ON CUTTING EDGE 68"	$ 1,230.00
4.2.3	BUCKET-GENERAL PURPOSE, BOLT ON CUTTING EDGE 74"	$ 1,360.00
4.2.4	BUCKET-GENERAL PURPOSE, BOLT ON CUTTING EDGE 80"	$ 1,440.00
4.2.5	BUCKET-GENERAL PURPOSE, BOLT ON CUTTING EDGE 86"	$ 1,540.00
4.2.6	BUCKET-LIGHT MATERIAL, BOLT ON CUTTING EDGE 74"	$ 1,390.00
4.2.7	BUCKET-LIGHT MATERIAL, BOLT ON CUTTING EDGE 80"	$ 1,490.00
4.2.8	BUCKET-LIGHT MATERIAL, BOLT ON CUTTING EDGE 86" (1.1 CU. YD.)	$ 1,600.00
4.2.9	BUCKET-LIGHT MATERIAL, BOLT ON CUTTING EDGE 86" (1.4 CU. YD.)	$ 1,780.00
4.2.10	BUCKET-LIGHT MATERIAL, BOLT ON CUTTING EDGE 98"	$ 1,800.00
4.2.11	BUCKET-LIGHT MATERIAL, BOLT ON CUTTING EDGE 104"	$ 1,870.00
4.2.12	BUCKET-LOW PROFILE, BOLT ON CUTTING EDGE 56"	$ 740.00
4.2.13	BUCKET-LOW PROFILE, BOLT ON CUTTING EDGE 62"	$ 850.00
4.2.14	BUCKET-LOW PROFILE, BOLT ON CUTTING EDGE 68"	$ 950.00
4.2.15	BUCKET-LOW PROFILE, BOLT ON CUTTING EDGE 74"	$ 1,050.00
4.2.16	BUCKET-LOW PROFILE, BOLT ON CUTTING EDGE 80"	$ 1,160.00
4.2.17	BUCKET-MULTI-PURPOSE, BOLT ON CUTTING EDGE W/SG, 62"	$ 3,030.00
4.2.18	BUCKET-MULTI-PURPOSE, BOLT ON TEETH W/SG 62"	$ 3,030.00
4.2.19	BUCKET-MULTI-PURPOSE, W/BO EDGE 68" W/SG	$ 3,290.00
4.2.20	BUCKET-MULTI-PURPOSE, BOLT ON TEETH 68" W/SG	$ 3,290.00
4.2.21	BUCKET-MULTI-PURPOSE, BOLT ON CUTTING EDGE 74" W/SG	$ 3,540.00
4.2.22	BUCKET-MULTI-PURPOSE, BOLT ON TEETH 74" W/SG	$ 3,540.00
4.2.23	BUCKET-MULTI-PURPOSE, BOLT ON CUTTING EDGE 80" W/SG	$ 3,800.00
4.2.24	BUCKET-MULTI-PURPOSE, BOLT ON TEETH 80" W/SG	$ 3,800.00
4.2.25	BUCKET-MULTI-PURPOSE, BOLT ON CUTTING EDGE 86" W/SG	$ 4,050.00
4.2.26	BUCKET-MULTI-PURPOSE, BOLT ON TEETH 86" W/SG	$ 4,050.00
4.2.27	BUCKET-TOOTH, BOLT ON TEETH 62"	$ 1,180.00
4.2.28	BUCKET-TOOTH, BOLT ON TEETH 68"	$ 1,270.00
4.2.29	BUCKET-TOOTH, BOLT ON TEETH 74"	$ 1,360.00
4.2.30	BUCKET-TOOTH, BOLT ON TEETH 80"	$ 1,470.00
4.2.31	BUCKET-TOOTH, BOLT ON TEETH 86"	$ 1,560.00
4.2.32	BUCKET-UTILITY, BOLT ON CUTTING EDGE 62"	$ 1,030.00
4.2.33	BUCKET-UTILITY, BOLT ON CUTTING EDGE 68"	$ 1,130.00
4.2.34	BUCKET-UTILITY, BOLT ON CUTTING EDGE 74"	$ 1,230.00

SKID / COMPACT TRACK LOADER
OPTIONS - FIXED PRICING
SPECIFICATION 4.0

Spec #	Description	Price
4.3	**Overtire tracks:**	
	Use this section to offer overtire tracks.	
4.4	**Forks:**	
	Use this section to offer fork options, such as pallet forks, bale handler, etc..	
4.4.1	FORKS, 48" PALLET W/ CARRIAGE	$ 710.00
4.4.2	FORKS, 66" INDUSTRIAL GRAPPLE	$ 4,640.00
4.4.3	FORKS, 72" INDUSTRIAL GRAPPLE	$ 5,540.00
4.5	**Adaptor Plate:**	
	Use this section to offer adaptor plate options.	
	Universal Adapter Plate	$ 220.00
4.6	**Snowblower:**	
	Use this section to offer snowblower options.	
4.6.1	SR115 SNOW BLOWER, 60" WORKING WIDTH, 20-23 GPM HYDRAULIC FLOW	$ 6,990.00
4.6.2	SR118 SNOW BLOWER, 72" WORKING WIDTH, 20-23 GPM HYDRAULIC FLOW	$ 7,100.00
4.6.3	SR121 SNOW BLOWER, 85" WORKING WIDTH, 20-23 GPM HYDRAULIC FLOW	$ 7,200.00
4.6.4	SR318 SNOW BLOWER, 72" WORKING WIDTH, 31-33 GPM HYDRAULIC FLOW	$ 7,470.00
4.6.5	SR321 SNOW BLOWER, 85" WORKING WIDTH, 31-33 GPM HYDRAULIC FLOW	$ 7,950.00
4.7	**Sweeper:**	
	Use this section to offer sweeper options.	
4.7.1	BA118C, MANUAL ANGLE, 83" WIDTH	$ 5,970.00
4.7.2	BA118C, HYDRAULIC ANGLE, 83" WIDTH	$ 7,120.00
4.7.3	BP115C, PICKUP BROOM	$ 5,530.00
4.7.4	BP118C, PICKUP BROOM	$ 5,940.00
4.7.5	BU115, UTILITY BROOM	$ 3,770.00
4.7.6	BU118, UTILITY BROOM	$ 4,100.00
4.8	**Backhoe:**	
	Use this section to offer backhoe options.	
4.8.1	BACKHOE, BH150 (INCLUDES D SERIES MOUNTING BRACKET AND 24" BUCKET).	$ 14,830.00
4.8.2	BACKHOE, BH160 W/ AUXILIARY (INCLUDES D SERIES MOUNTING BRACKET AND 24" BUCKET).	$ 15,280.00
4.9	**Planer:**	
	Use this section to offer planer options.	
4.9.1	COLD PLANER, PC104B, 14" WORKING WIDTH, 16-21 GPM REQUIRED HYDRAULIC FLOW	$ 10,000.00
4.9.2	COLD PLANER, PC205B, 18" WORKING WIDTH, 21-31 GPM REQUIRED HYDRAULIC FLOW	$ 12,550.00
4.9.3	COLD PLANER, PC305B, 18" WORKING WIDTH, 26-33 GPM REQUIRED HYDRAULIC FLOW	$ 15,400.00
4.9.4	COLD PLANER, PC306B, 24" WORKING WIDTH, 26-33 GPM REQUIRED HYDRAULIC FLOW	$ 16,510.00
4.9.5	COLD PLANER, PC408B, 30" WORKING WIDTH, 40 GPM REQUIRED HYDRAULIC FLOW	$ 19,490.00
4.9.6	COLD PLANER, PC310B, 39" WORKING WIDTH, 33 GPM REQUIRED HYDRAULIC FLOW	$ 23,010.00
4.9.7	COLD PLANER, PC412, 47" WORKING WIDTH, 40 GPM REQUIRED HYDRAULIC FLOW	$ 25,560.00
4.10	**Snow Plow:**	
	Use this section to offer snow plow options.	
4.10.1	SNOW PLOW, 72"	$ 3,580.00
4.10.2	SNOW PLOW, 84"	$ 3,780.00
4.10.3	SNOW PLOW, 96"	$ 3,980.00
4.10.4	SNOW PLOW, 108"	$ 4,240.00
4.10.5	SNOW PLOW, 120"	$ 4,780.00
4.10.6	SNOW PUSH, SSL, STD DTY 8'	$ 2,520.00
4.10.7	SNOW PUSH, SSL, STD DTY 10'	$ 2,970.00
4.10.8	SNOW PUSH, SSL, STD DTY 12'	$ 3,530.00
4.11	**Hydraulic breaker:**	
	Use this section to offer hydraulic breaker options.	
4.11.1	H55S HAMMER WITH SSL MOUNTS	$ 7,850.00
4.11.2	H65S HAMMER WITH SSL MOUNTS	$ 9,230.00
4.11.3	B4 HAMMER, NON-SILENCED WITH SSL MOUNTS	$ 4,390.00
4.11.4	B4S HAMMER, SILENCED WITH SSL MOUNTS	$ 4,880.00
4.11.5	B6S HAMMER, SILENCED WITH SSL MOUNTS	$ 7,100.00
4.11.6	B6S HAMMER, NON-SILENCED WITH SSL MOUNTS	$ 6,390.00
4.11.7	B8S HAMMER, SILENCED WITH SSL MOUNTS	$ 9,430.00
4.11.8	B8 HAMMER, NON-SILENCED WITH SSL MOUNTS	$ 8,490.00
4.12	**Grapple:**	
	Use this section to offer grapple options.	
4.12.1	BUCKET, UTILITY GRAPPLE 68"	$ 2,430.00
4.12.2	BUCKET, UTILITY GRAPPLE 74"	$ 2,530.00
4.12.3	BUCKET, INDUSTRIAL GRAPPLE 62"	$ 3,590.00
4.12.4	BUCKET, INDUSTRIAL GRAPPLE 68"	$ 3,760.00
4.12.5	BUCKET, INDUSTRIAL GRAPPLE 74"	$ 4,210.00
4.12.6	BUCKET, INDUSTRIAL GRAPPLE 80"	$ 4,640.00
4.12.7	GRAPPLE RAKE 72"	$ 3,140.00
4.12.8	GRAPPLE RAKE 84"	$ 3,510.00
4.13	**Landscape:**	
	Use this section to offer landscape options.	
4.13.1	BRUSHCUTTER, BR160, 60"	$ 4,700.00
4.13.2	BRUSHCUTTER, BR166, 66"	$ 4,910.00
4.13.3	BRUSHCUTTER, BR172, 72"	$ 5,130.00
4.13.4	BRUSHCUTTER, BR272, 72" HF	$ 5,350.00
4.13.5	BRUSHCUTTER, BR378, 78" HF,XPS	$ 6,440.00
4.13.6	BRUSHCUTTER, BRX118 72"	$ 11,850.00
4.13.7	BRUSHCUTTER, BRX318 72", HF, XPS	$ 12,170.00
4.13.8	BRUSHCUTTER, BRX418	$ 12,170.00
4.13.9	LANDSCAPE RAKE, LR15B	$ 5,910.00
4.13.10	LANDSCAPE RAKE, LR18B	$ 6,330.00
4.13.11	LANDSCAPE TILLER, LT13B	$ 4,180.00
4.13.12	LANDSCAPE TILLER, LT18B	$ 4,740.00
4.13.13	MULCHER, HM112C, 49", 16-18 GPM REQUIRED HYDRAULIC FLOW	$ 19,330.00
4.13.14	MULCHER, HM115C, 58", 20-23 GPM REQUIRED HYDRAULIC FLOW	$ 20,330.00
4.13.15	MULCHER, HM215C, 58", 25-31 GPM REQUIRED HYDRAULIC FLOW	$ 21,080.00
4.13.16	MULCHER, HM315C, 58", 31-33 GPM REQUIRED HYDRAULIC FLOW	$ 27,830.00
4.13.17	MULCHER, HM415C, 58.6", 36-41 GPM REQUIRED HYDRAULIC FLOW	$ 30,300.00
4.13.18	MULCHER, HM418C, 67.2", 40-41 GPM REQUIRED HYDRAULIC FLOW	$ 32,230.00
4.13.19	POWER BOX RAKE-HYDRAULIC,PR172	$ 8,620.00
4.13.20	POWER BOX RAKE-HYDRAULIC,PR184	$ 9,120.00
4.13.21	POWER BOX RAKE-HYDRAULIC,PR190	$ 9,830.00
4.13.22	POWER BOX RAKE-MANUAL, PR172	$ 7,910.00
4.13.23	POWER BOX RAKE-MANUAL, PR184	$ 8,190.00
4.13.24	STUMP GRINDER, SG16B	$ 6,370.00
4.13.25	STUMP GRINDER, SG18B	$ 7,370.00
4.13.26	TRENCHER, T6B, 36" BOOM LENGTH	$ 4,610.00
4.13.27	TRENCHER, T9B, 48" BOOM LENGTH	$ 4,880.00
4.13.28	TRENCHER, T15B 6", 60" BOOM LENGTH	$ 6,250.00

SKID / COMPACT TRACK LOADER
OPTIONS - FIXED PRICING
SPECIFICATION 4.0

Spec #	Description	Price
4.14	**Grader:**	
	Use this section to offer grader options.	
4.14.1	BB121, 84", GRADING BOX, INCLUDES TECHNOLOGY AND INSTALLATION.	$ 15,890.00
4.14.2	BB124, 96", GRADING BOX, INCLUDES TECHNOLOGY AND INSTALLATION.	$ 16,200.00
4.14.3	BLADE, DOZER, 6-WAY, 79"	$ 5,070.00
4.14.4	BLADE, DOZER, 6-WAY, 92"	$ 5,570.00
4.15	**Auger:**	
	Use this section to offer auger options.	
4.15.1	AUGER, A14B	$ 1,900.00
4.15.2	AUGER, A19B	$ 2,250.00
4.15.3	AUGER, A26B, HF	$ 3,620.00
4.15.4	BIT, AUGER 6"	$ 290.00
4.15.5	BIT, AUGER 9"	$ 380.00
4.15.6	BIT, AUGER 12"	$ 480.00
4.15.7	BIT, AUGER 15" STANDARD	$ 580.00
4.15.8	BIT, AUGER 18"	$ 670.00
4.15.9	BIT, AUGER 24"	$ 860.00
4.15.10	BIT, AUGER 30"	$ 1,050.00
4.15.11	BIT, AUGER 36"	$ 1,230.00
4.15.12	BIT, AUGER 6" INDUSTRIAL	$ 400.00
4.15.13	BIT, AUGER 9" INDUSTRIAL	$ 490.00
4.15.14	BIT, AUGER 12" INDUSTRIAL	$ 580.00
4.15.15	BIT, AUGER 16" INDUSTRIAL	$ 700.00
4.15.16	BIT, AUGER 18" INDUSTRIAL	$ 770.00
4.15.17	BIT, AUGER 24" INDUSTRIAL	$ 1,130.00
4.15.18	TREE BIT, AUGER 24"	$ 760.00
4.15.19	TREE BIT, AUGER 36"	$ 1,190.00
4.15.20	ADAPTER, AUGER - HEX TO ROUND	$ 140.00
4.15.21	ADAPTER, AUGER - ROUND TO HEX	$ 120.00
4.15.22	EXTENSION, TELESCOPING 3'	$ 280.00
4.15.23	EXTENSION, TELESCOPING 6'	$ 470.00
4.15.24	EXTENSION, AUGER 12"	$ 120.00
4.15.25	EXTENSION, AUGER 24"	$ 170.00

SKID / COMPACT TRACK LOADER
OPTIONS - FIXED PRICING
SPECIFICATION 4.0

Spec #	Description	Price
4.16	**Wheel saw:**	
	Use this section to offer wheel saw options.	
4.16.1	WHEEL SAW, SW345B, 3"	$ 19,340.00
4.16.2	WHEEL SAW, SW360B, 3"	$ 21,910.00
4.16.3	WHEEL SAW, SW360B, 6"	$ 22,270.00
4.16.4	WHEEL SAW, SW360B, 8"	$ 23,320.00
4.16.5	WHEEL SAW, SW460B, 3"	$ 22,270.00
4.16.6	WHEEL SAW, SW460, 6"	$ 22,940.00
4.16.7	WHEEL SAW, SW460, 8"	$ 23,320.00
4.16.8	WHEEL SAW, SW380B, 10"	$ 30,810.00
4.17	**Vibratory roller:**	
	Use this section to offer vibratory roller options.	
4.17.1	CV16B, VIBRATORY COMPACTOR	$ 9,470.00
4.17.2	CV18B, VIBRATORY COMPACTOR	$ 10,150.00
4.18	**Other:**	
	Use this section to offer any other option not already covered.	
4.18.1	S305, SSL SHEARS - 9.4" JAW OPENING	$ 23,510.00
4.18.2	MATERIAL HANDLING ARM, 84", 2,000 LB. CAPACITY	$ 1,320.00
4.18.3	MB200, MIXING BUCKET	$ 5,510.00
4.18.4	MB250, MIXING BUCKET	$ 5,770.00
4.19	**EXTENDED WARRANTY OPTIONS**	
	Use this section to offer performance/warranty options, number these items starting with 20.1, 20.2, 20.3, etc. **(Specify years, miles or hours extended term covers.)**	
4.19.1	3 Year / 3,000 Hour Powertrain Warranty	$ 1,170.00
4.19.2	3 Year / 4,000 Hour Powertrain Warranty	$ 1,360.00
4.19.3	3 Year / 5,000 Hour Powertrain Warranty	$ 1,580.00
4.19.4	3 Year / 3,000 Hour Powertrain + Hydraulics + Technology Warranty	$ 2,040.00
4.19.5	3 Year / 4,000 Hour Powertrain + Hydraulics + Technology Warranty	$ 2,370.00
4.19.6	3 Year / 5,000 Hour Powertrain + Hydraulics + Technology Warranty	$ 2,740.00
4.19.7	3 Year - 3,000 Hour Premier Warranty	$ 3,960.00
4.19.8	3 Year - 4,000 Hour Premier Warranty	$ 4,610.00
4.19.9	3 Year - 5,000 Hour Premier Warranty	$ 5,330.00
4.19.10	4 Year / 3,000 Hour Powertrain Warranty	$ 1,360.00
4.19.11	4 Year / 4,000 Hour Powertrain Warranty	$ 2,260.00
4.19.12	4 Year / 5,000 Hour Powertrain Warranty	$ 2,570.00
4.19.13	4 Year / 3,000 Hour Powertrain + Hydraulics + Technology Warranty	$ 2,370.00
4.19.14	4 Year / 4,000 Hour Powertrain + Hydraulics + Technology Warranty	$ 3,940.00
4.19.15	4 Year / 5,000 Hour Powertrain + Hydraulics + Technology Warranty	$ 4,470.00
4.19.16	4 Year - 3,000 Hour Premier Warranty	$ 4,600.00
4.19.17	4 Year - 4,000 Hour Premier Warranty	$ 7,670.00
4.19.18	4 Year - 5,000 Hour Premier Warranty	$ 8,710.00
4.19.19	5 Year / 3,000 Hour Powertrain Warranty	$ 1,570.00
4.19.20	5 Year / 4,000 Hour Powertrain Warranty	$ 2,560.00
4.19.21	5 Year / 5,000 Hour Powertrain Warranty	$ 3,990.00
4.19.22	5 Year / 3,000 Hour Powertrain + Hydraulics + Technology Warranty	$ 2,720.00
4.19.23	5 Year / 4,000 Hour Powertrain + Hydraulics + Technology Warranty	$ 4,460.00
4.19.24	5Year / 5,000 Hour Powertrain + Hydraulics + Technology Warranty	$ 6,970.00
4.19.25	5 Year - 3,000 Hour Premier Warranty	$ 5,300.00
4.19.26	5 Year - 4,000 Hour Premier Warranty	$ 8,670.00
4.19.27	5 Year - 5,000 Hour Premier Warranty	$ 13,550.00
4.19.46	*does not include travel charges	
4.19.47	*see attached warranty statement	

4.20 NEW EQUIPMENT RENTAL PROGRAM

If rental programs are available on the new equipment offered, with the option to purchase, list the hourly/weekly/monthly rental rate. Indicate the percent of rental fee paid by the purchaser that will be applied to the purchase price. See Solicitation Special Terms & Conditions.

Hourly Rental Rate:	$35.00
Weekly Rental Rate:	$1,300.00
Monthly Rental Rate:	$3,900.00
Percent (%) of Rental Fee applied to purchase price:	100%

If the new rental equipment is purchased and finance
Charges are applicable for the actual rental term only.
State the actual interest rate here: _____Prime + 3%_____

4.21 VENDOR OWNED RENTAL RETURN OR DEMO EQUIPMENT PROGRAM
(See Solicitation Special Terms and Conditions.)
DEDUCT cost per Used Hour from the original Contract Price: $20.00

4.22 DELIVERY STARTING POINT - City, State, Zip: Nearest Ziegler Location
(See Special Terms and Conditions - no flat rate allowed.) **Price Per Loaded Mile:** $3.00

4.23 INSTALLATION - PER HOUR (Hourly Shop Rate):
Installation services may be requested on an "as needed" basis - see special terms and conditions.) $138.00

4.24 PRICE FOR ADDITIONAL MANUALS (1 of each included at no cost, per specs)

ADDITIONAL SERVICE MANUAL		
	Digital	$ 50.00
	Paper	$ 950.00
ADDITIONAL PARTS MANUAL		
	Digital	$ 50.00
	Paper	$ 50.00
PRICE FOR ADDITIONAL OPERATIONS MANUAL		
	Digital	$ 50.00
	Paper	$ 50.00

4.25 DISCOUNT OFF LIST PRICE FOR RELATED PARTS & ACCESSORIES %
(See Special Terms and Conditions)

T-631
Tractors: Skid Steers Attachments
727-1019

Skid Steer / Compact Track Loaders

FIXED PRICING
(BASE UNIT INFORMATION)
Specification 3.0

October, 2019

Vendor Name:	**Ziegler Inc.**
Contact Person:	**Cory Dalbec, Chris Rice**
Street Address:	**901 West 94th Street**
P.O. Box:	
City, State, Zip	**Bloomington, MN 55420**
Phone #:	**952.888.4121**
Toll Free #:	**800.352.2812**
Email Address:	**cory.dalbec@zieglercat.com, chris.rice@zieglercat.com**
Website:	www.zieglercat.com

Spec #	Information Requested	Answer
3.1	**MAKE AND MODEL**	Caterpillar 299D3XE
	Engine Type and SAE net HP	Cat C3.8 DIT (Turbo) 106 HP
	Tier	Tier 4 Final
	Length w/o attachments	125.5"
	Height with operator cab	83.6"
	Ground clearance	9.6"
	Maximum height to bucket hinge pin	126.3"
	Breakout force	7,270 lb
	Reach at maximum height	19.4"
	Dump angle at maximum height	54 Degrees
	Dump height with standard bucket	94.5"
	Front clearance circle with standard bucket	91.1"
	Rear clearance circle	74"
	Tipping load - SAE rated	10,170 lb
	Rated operating capacity - SAE	5,360 lb
	Standard bucket capacity - SAE heaped rating	.82 CYD
	Operating weight - SAE rated	11,756 lb
	Travel speed	8.4 mph Two Speed
	Fuel tank capacity	31.7 gal
	Cold weather starting assist	Glow Plugs
	Battery CCA	1,000 CCA
	Alternator size - amps	100 amps
	Transmission type	Hydrostatic
	Tire / Track size / width	Track, Rubber, 17.7 IN (400MM)
	Final drive chains and drive method	Drive sprocket to track drive
	Final drive chain adjustment / maintenance	Not required
	Gauges / instrumentation	Gauges: fuel level, hour meter Instrumentation: Engine coolant temperature, engine oil pressure, hydraulic oil temperature
	Pump type - GPM and PSI	Piston - Standard Flow 23 GPM & 3,335 psi - High Flow 40 GPM & 4,061 psi
	Control valves	Hydraulic 3 section
	Hydraulic oil cooler	Included - air to oil
	Drive controls	Electro/Hydraulic - hand controls
	Lift and tilt controls	Electro/Hydraulic - hand controls
	Engine speed control	Both foot and hand control
	Work lights - front	Included 2 each
	Work lights - rear	Included 2 each
	Warranty	2 years / unlimited hours full machine
	BASE UNIT PRICE:	$ 83,720.00

SKID / COMPACT TRACK LOADER
OPTIONS - FIXED PRICING
SPECIFICATION 4.0

Spec #	Description	Price
	Price for base unit:	$ 83,720.00
4.1	**Skid/Compact Track Loader Options:** Use this section to offer additional skid/track loader options such as hand controls, gauges, heater, enclosed cab etc.. These options should be for skid steer power unit and not attachments.	
4.1.1	PRESSURIZED CAB, HEATER/DEFROSTER, AIR CONDITIONING & DOOR	INCLUDED
4.1.2	AIR SUSPENSION SEAT-CLOTH	INCLUDED
4.1.3	ELECTRIC WORK TOOL CONTROL	INCLUDED
4.1.4	TWO SPEED CONTROL	INCLUDED
4.1.5	HYDRAULIC COUPLER	INCLUDED
4.1.6	MANUAL COUPLER	$ (680.00)
4.1.7	RIDE CONTROL	INCLUDED
4.1.8	HIGH FLOW HYDRAULICS w/DUAL SELF LEVEL	INCLUDED
4.1.9	DOOR, CAB, POLYCARBONATE	INCLUDED
4.1.10	RADIO AM-FM, CD, BLUETOOTH	INCLUDED
4.1.11	ADVANCED DISPLAY WITH BACKUP CAMERA	INCLUDED
4.1.12	PROPORTIONAL HYDRAULICS	INCLUDED
4.1.13	DUAL SELF-LEVELING	INCLUDED
4.1.14	HEAVY DUTY BATTERY W/DISCONNECT	INCLUDED
4.1.15	LIGHTS LED	INCLUDED
4.1.16	SEAT BELT, 2"	INCLUDED
4.1.17	SEAT BELT, 3"	$ 200.00
4.1.18	BEACON LIGHT	$ 160.00
4.1.19	REAR LIGHTS	$ -
4.1.20	REAR LIGHTS, STOP/TAIL/TURN	$ 550.00
4.1.21	ROADING LIGHTS	$ 690.00
4.1.22	RETURN TO DIG/ WORKTOOL POSITIONER	INCLUDED
4.1.23	COUNTERWEIGHT, MACHINE EXTERNAL	$ 720.00
4.1.24	SINGLE EYE LIFTING POINT	$ 1,200.00
4.1.25	LIFTING EYE 4 POINT	$ 140.00
4.1.26	FOPS, LEVEL 2	$ 2,700.00
4.1.27	HEATER, ENGINE COOLANT, 120V	$ 140.00
4.1.28	PRODUCT LINK, CELLULAR, PL243	INCLUDED
4.1.29	PRODUCT LINK, CELLULAR, PL641	$ 330.00
4.1.30	OIL, HYDRAULIC, COLD OPERATION	$ 470.00
4.1.31	MOUNTING, FIRE EXTINGUISHER	$ 290.00
4.1.32	FIRE SUPPRESSION SYSTEM	$ 5,190.00
4.1.33	PATTERN CHANGER	$ 750.00
4.1.34	CASE DEDICATED CONTROLS	$ 100.00
4.1.35	PAINT, CUSTOM	$ 1,460.00
4.1.36	ON DEMAND FAN	INCLUDED
4.1.37	REVERSING FAN	$ 590.00
4.1.38	TRIPLE FLANGE IDLERS	INCLUDED
4.1.39	TRACK, STEEL, 14 IN (355MM)	$ 4,420.00
4.1.40	TRACK, RUBBER, 15.7 IN (400MM) BLOCK TREAD	$ (510.00)
4.1.41	TRACK, RUBBER, 17.7 IN (400MM) BLOCK TREAD	$ (50.00)
4.1.42	TRACK, RUBBER, 17.7 IN (400MM) BAR TREAD	INCLUDED
4.1.43	LAND MANAGEMENT PACKAGE 1 - DEBRIS GUARDS, DEBRIS PROTECTION, SPEED SENSOR GUARDING, PRECLEANER, TURBO GUARD	$ 3,690.00
4.1.44	LAND MANAGEMENT PACKAGE 2 - LM1 PLUS AUXILIARY HYDRAULIC COOLER	$ 6,270.00
4.2	**Bucket Options:** Use this section to offer bucket options such as standard, snow or combination buckets, etc..	
4.2.1	BUCKET-GENERAL PURPOSE, BOLT ON CUTTING EDGE 62"	$ 1,130.00
4.2.2	BUCKET-GENERAL PURPOSE, BOLT ON CUTTING EDGE 68"	$ 1,230.00
4.2.3	BUCKET-GENERAL PURPOSE, BOLT ON CUTTING EDGE 74"	$ 1,360.00
4.2.4	BUCKET-GENERAL PURPOSE, BOLT ON CUTTING EDGE 80"	$ 1,440.00
4.2.5	BUCKET-GENERAL PURPOSE, BOLT ON CUTTING EDGE 86"	$ 1,540.00
4.2.6	BUCKET-LIGHT MATERIAL, BOLT ON CUTTING EDGE 74"	$ 1,390.00
4.2.7	BUCKET-LIGHT MATERIAL, BOLT ON CUTTING EDGE 80"	$ 1,490.00
4.2.8	BUCKET-LIGHT MATERIAL, BOLT ON CUTTING EDGE 86" (1.1 CU. YD.)	$ 1,600.00
4.2.9	BUCKET-LIGHT MATERIAL, BOLT ON CUTTING EDGE 86" (1.4 CU. YD.)	$ 1,780.00
4.2.10	BUCKET-LIGHT MATERIAL, BOLT ON CUTTING EDGE 98"	$ 1,800.00
4.2.11	BUCKET-LIGHT MATERIAL, BOLT ON CUTTING EDGE 104"	$ 1,870.00
4.2.12	BUCKET-LOW PROFILE, BOLT ON CUTTING EDGE 56"	$ 740.00
4.2.13	BUCKET-LOW PROFILE, BOLT ON CUTTING EDGE 62"	$ 850.00
4.2.14	BUCKET-LOW PROFILE, BOLT ON CUTTING EDGE 68"	$ 950.00
4.2.15	BUCKET-LOW PROFILE, BOLT ON CUTTING EDGE 74"	$ 1,050.00
4.2.16	BUCKET-LOW PROFILE, BOLT ON CUTTING EDGE 80"	$ 1,160.00
4.2.17	BUCKET-MULTI-PURPOSE, BOLT ON CUTTING EDGE W/SG, 62"	$ 3,030.00
4.2.18	BUCKET-MULTI-PURPOSE, BOLT ON TEETH W/SG 62"	$ 3,030.00
4.2.19	BUCKET-MULTI-PURPOSE, W/BO EDGE 68" W/SG	$ 3,290.00
4.2.20	BUCKET-MULTI-PURPOSE, BOLT ON TEETH 68" W/SG	$ 3,290.00
4.2.21	BUCKET-MULTI-PURPOSE, BOLT ON CUTTING EDGE 74" W/SG	$ 3,540.00
4.2.22	BUCKET-MULTI-PURPOSE, BOLT ON TEETH 74" W/SG	$ 3,540.00
4.2.23	BUCKET-MULTI-PURPOSE, BOLT ON CUTTING EDGE 80" W/SG	$ 3,800.00
4.2.24	BUCKET-MULTI-PURPOSE, BOLT ON TEETH 80" W/SG	$ 3,800.00
4.2.25	BUCKET-MULTI-PURPOSE, BOLT ON CUTTING EDGE 86" W/SG	$ 4,050.00
4.2.26	BUCKET-MULTI-PURPOSE, BOLT ON TEETH 86" W/SG	$ 4,050.00
4.2.27	BUCKET-TOOTH, BOLT ON TEETH 62"	$ 1,180.00
4.2.28	BUCKET-TOOTH, BOLT ON TEETH 68"	$ 1,270.00
4.2.29	BUCKET-TOOTH, BOLT ON TEETH 74"	$ 1,360.00
4.2.30	BUCKET-TOOTH, BOLT ON TEETH 80"	$ 1,470.00
4.2.31	BUCKET-TOOTH, BOLT ON TEETH 86"	$ 1,560.00
4.2.32	BUCKET-UTILITY, BOLT ON CUTTING EDGE 62"	$ 1,030.00
4.2.33	BUCKET-UTILITY, BOLT ON CUTTING EDGE 68"	$ 1,130.00
4.2.34	BUCKET-UTILITY, BOLT ON CUTTING EDGE 74"	$ 1,230.00

SKID / COMPACT TRACK LOADER
OPTIONS - FIXED PRICING
SPECIFICATION 4.0

Spec #	Description	Price
4.3	**Overtire tracks:**	
	Use this section to offer overtire tracks.	
4.4	**Forks:**	
	Use this section to offer fork options, such as pallet forks, bale handler, etc..	
4.4.1	FORKS, 48" PALLET W/ CARRIAGE	$ 710.00
4.4.2	FORKS, 66" INDUSTRIAL GRAPPLE	$ 4,640.00
4.4.3	FORKS, 72" INDUSTRIAL GRAPPLE	$ 5,540.00
4.5	**Adaptor Plate:**	
	Use this section to offer adaptor plate options.	
	Universal Adapter Plate	$ 220.00
4.6	**Snowblower:**	
	Use this section to offer snowblower options.	
4.6.1	SR115 SNOW BLOWER, 60" WORKING WIDTH, 20-23 GPM HYDRAULIC FLOW	$ 6,990.00
4.6.2	SR118 SNOW BLOWER, 72" WORKING WIDTH, 20-23 GPM HYDRAULIC FLOW	$ 7,100.00
4.6.3	SR121 SNOW BLOWER, 85" WORKING WIDTH, 20-23 GPM HYDRAULIC FLOW	$ 7,200.00
4.6.4	SR318 SNOW BLOWER, 72" WORKING WIDTH, 31-33 GPM HYDRAULIC FLOW	$ 7,470.00
4.6.5	SR321 SNOW BLOWER, 85" WORKING WIDTH, 31-33 GPM HYDRAULIC FLOW	$ 7,950.00
4.7	**Sweeper:**	
	Use this section to offer sweeper options.	
4.7.1	BA118C, MANUAL ANGLE, 83" WIDTH	$ 5,970.00
4.7.2	BA118C, HYDRAULIC ANGLE, 83" WIDTH	$ 7,120.00
4.7.3	BP115C, PICKUP BROOM	$ 5,530.00
4.7.4	BP118C, PICKUP BROOM	$ 5,940.00
4.7.5	BU115, UTILITY BROOM	$ 3,770.00
4.7.6	BU118, UTILITY BROOM	$ 4,100.00
4.8	**Backhoe:**	
	Use this section to offer backhoe options.	
4.8.1	BACKHOE, BH150 (INCLUDES D SERIES MOUNTING BRACKET AND 24" BUCKET).	$ 14,830.00
4.8.2	BACKHOE, BH160 W/ AUXILIARY (INCLUDES D SERIES MOUNTING BRACKET AND 24" BUCKET).	$ 15,280.00
4.9	**Planer:**	
	Use this section to offer planer options.	
4.9.1	COLD PLANER, PC104B, 14" WORKING WIDTH, 16-21 GPM REQUIRED HYDRAULIC FLOW	$ 10,000.00
4.9.2	COLD PLANER, PC205B, 18" WORKING WIDTH, 21-31 GPM REQUIRED HYDRAULIC FLOW	$ 12,550.00
4.9.3	COLD PLANER, PC305B, 18" WORKING WIDTH, 26-33 GPM REQUIRED HYDRAULIC FLOW	$ 15,400.00
4.9.4	COLD PLANER, PC306B, 24" WORKING WIDTH, 26-33 GPM REQUIRED HYDRAULIC FLOW	$ 16,510.00
4.9.5	COLD PLANER, PC408B, 30" WORKING WIDTH, 40 GPM REQUIRED HYDRAULIC FLOW	$ 19,490.00
4.9.6	COLD PLANER, PC310B, 39" WORKING WIDTH, 33 GPM REQUIRED HYDRAULIC FLOW	$ 23,010.00
4.9.7	COLD PLANER, PC412, 47" WORKING WIDTH, 40 GPM REQUIRED HYDRAULIC FLOW	$ 25,560.00
4.10	**Snow Plow:**	
	Use this section to offer snow plow options.	
4.10.1	SNOW PLOW, 72"	$ 3,580.00
4.10.2	SNOW PLOW, 84"	$ 3,780.00
4.10.3	SNOW PLOW, 96"	$ 3,980.00
4.10.4	SNOW PLOW, 108"	$ 4,240.00
4.10.5	SNOW PLOW, 120"	$ 4,780.00
4.10.6	SNOW PUSH, SSL, STD DTY 8'	$ 2,520.00
4.10.7	SNOW PUSH, SSL, STD DTY 10'	$ 2,970.00
4.10.8	SNOW PUSH, SSL, STD DTY 12'	$ 3,530.00
4.11	**Hydraulic breaker:**	
	Use this section to offer hydraulic breaker options.	
4.11.1	H55S HAMMER WITH SSL MOUNTS	$ 7,850.00
4.11.2	H65S HAMMER WITH SSL MOUNTS	$ 9,230.00
4.11.3	B4 HAMMER, NON-SILENCED WITH SSL MOUNTS	$ 4,390.00
4.11.4	B4S HAMMER, SILENCED WITH SSL MOUNTS	$ 4,880.00
4.11.5	B6S HAMMER, SILENCED WITH SSL MOUNTS	$ 7,100.00
4.11.6	B6S HAMMER, NON-SILENCED WITH SSL MOUNTS	$ 6,390.00
4.11.7	B8S HAMMER, SILENCED WITH SSL MOUNTS	$ 9,430.00
4.11.8	B8 HAMMER, NON-SILENCED WITH SSL MOUNTS	$ 8,490.00
4.12	**Grapple:**	
	Use this section to offer grapple options.	
4.12.1	BUCKET, UTILITY GRAPPLE 68"	$ 2,430.00
4.12.2	BUCKET, UTILITY GRAPPLE 74"	$ 2,530.00
4.12.3	BUCKET, INDUSTRIAL GRAPPLE 62"	$ 3,590.00
4.12.4	BUCKET, INDUSTRIAL GRAPPLE 68"	$ 3,760.00
4.12.5	BUCKET, INDUSTRIAL GRAPPLE 74"	$ 4,210.00
4.12.6	BUCKET, INDUSTRIAL GRAPPLE 80"	$ 4,640.00
4.12.7	GRAPPLE RAKE 72"	$ 3,140.00
4.12.8	GRAPPLE RAKE 84"	$ 3,510.00
4.13	**Landscape:**	
	Use this section to offer landscape options.	
4.13.1	BRUSHCUTTER, BR160, 60"	$ 4,700.00
4.13.2	BRUSHCUTTER, BR166, 66"	$ 4,910.00
4.13.3	BRUSHCUTTER, BR172, 72"	$ 5,130.00
4.13.4	BRUSHCUTTER, BR272, 72" HF	$ 5,350.00
4.13.5	BRUSHCUTTER, BR378, 78" HF,XPS	$ 6,440.00
4.13.6	BRUSHCUTTER, BRX118 72"	$ 11,850.00
4.13.7	BRUSHCUTTER, BRX318 72", HF, XPS	$ 12,170.00
4.13.8	BRUSHCUTTER, BRX418	$ 12,170.00
4.13.9	LANDSCAPE RAKE, LR15B	$ 5,910.00
4.13.10	LANDSCAPE RAKE, LR18B	$ 6,330.00
4.13.11	LANDSCAPE TILLER, LT13B	$ 4,180.00
4.13.12	LANDSCAPE TILLER, LT18B	$ 4,740.00
4.13.13	MULCHER, HM112C, 49", 16-18 GPM REQUIRED HYDRAULIC FLOW	$ 19,330.00
4.13.14	MULCHER, HM115C, 58", 20-23 GPM REQUIRED HYDRAULIC FLOW	$ 20,330.00
4.13.15	MULCHER, HM215C, 58", 25-31 GPM REQUIRED HYDRAULIC FLOW	$ 21,080.00
4.13.16	MULCHER, HM315C, 58", 31-33 GPM REQUIRED HYDRAULIC FLOW	$ 27,830.00
4.13.17	MULCHER, HM415C, 58.6", 36-41 GPM REQUIRED HYDRAULIC FLOW	$ 30,300.00
4.13.18	MULCHER, HM418C, 67.2", 40-41 GPM REQUIRED HYDRAULIC FLOW	$ 32,230.00
4.13.19	POWER BOX RAKE-HYDRAULIC,PR172	$ 8,620.00
4.13.20	POWER BOX RAKE-HYDRAULIC,PR184	$ 9,120.00
4.13.21	POWER BOX RAKE-HYDRAULIC,PR190	$ 9,830.00
4.13.22	POWER BOX RAKE-MANUAL, PR172	$ 7,910.00
4.13.23	POWER BOX RAKE-MANUAL, PR184	$ 8,190.00
4.13.24	STUMP GRINDER, SG16B	$ 6,370.00
4.13.25	STUMP GRINDER, SG18B	$ 7,370.00
4.13.26	TRENCHER, T6B, 36" BOOM LENGTH	$ 4,610.00
4.13.27	TRENCHER, T9B, 48" BOOM LENGTH	$ 4,880.00
4.13.28	TRENCHER, T15B 6", 60" BOOM LENGTH	$ 6,250.00

SKID / COMPACT TRACK LOADER
OPTIONS - FIXED PRICING
SPECIFICATION 4.0

Spec #	Description	Price
4.14	**Grader:**	
	Use this section to offer grader options.	
4.14.1	BB121, 84", GRADING BOX, INCLUDES TECHNOLOGY AND INSTALLATION.	$ 15,890.00
4.14.2	BB124, 96", GRADING BOX, INCLUDES TECHNOLOGY AND INSTALLATION.	$ 16,200.00
4.14.3	BLADE, DOZER, 6-WAY, 79"	$ 5,070.00
4.14.4	BLADE, DOZER, 6-WAY, 92"	$ 5,570.00
4.15	**Auger:**	
	Use this section to offer auger options.	
4.15.1	AUGER, A14B	$ 1,900.00
4.15.2	AUGER, A19B	$ 2,250.00
4.15.3	AUGER, A26B, HF	$ 3,620.00
4.15.4	BIT, AUGER 6"	$ 290.00
4.15.5	BIT, AUGER 9"	$ 380.00
4.15.6	BIT, AUGER 12"	$ 480.00
4.15.7	BIT, AUGER 15" STANDARD	$ 580.00
4.15.8	BIT, AUGER 18"	$ 670.00
4.15.9	BIT, AUGER 24"	$ 860.00
4.15.10	BIT, AUGER 30"	$ 1,050.00
4.15.11	BIT, AUGER 36"	$ 1,230.00
4.15.12	BIT, AUGER 6" INDUSTRIAL	$ 400.00
4.15.13	BIT, AUGER 9" INDUSTRIAL	$ 490.00
4.15.14	BIT, AUGER 12" INDUSTRIAL	$ 580.00
4.15.15	BIT, AUGER 16" INDUSTRIAL	$ 700.00
4.15.16	BIT, AUGER 18" INDUSTRIAL	$ 770.00
4.15.17	BIT, AUGER 24" INDUSTRIAL	$ 1,130.00
4.15.18	TREE BIT, AUGER 24"	$ 760.00
4.15.19	TREE BIT, AUGER 36"	$ 1,190.00
4.15.20	ADAPTER, AUGER - HEX TO ROUND	$ 140.00
4.15.21	ADAPTER, AUGER - ROUND TO HEX	$ 120.00
4.15.22	EXTENSION, TELESCOPING 3'	$ 280.00
4.15.23	EXTENSION, TELESCOPING 6'	$ 470.00
4.15.24	EXTENSION, AUGER 12"	$ 120.00
4.15.25	EXTENSION, AUGER 24"	$ 170.00
4.16	**Wheel saw:**	
	Use this section to offer wheel saw options.	
4.16.1	WHEEL SAW, SW345B, 3"	$ 19,340.00
4.16.2	WHEEL SAW, SW360B, 3"	$ 21,910.00
4.16.3	WHEEL SAW, SW360B, 6"	$ 22,270.00
4.16.4	WHEEL SAW, SW360B, 8"	$ 23,320.00
4.16.5	WHEEL SAW, SW460B, 3"	$ 22,270.00
4.16.6	WHEEL SAW, SW460, 6"	$ 22,940.00
4.16.7	WHEEL SAW, SW460, 8"	$ 23,320.00
4.16.8	WHEEL SAW, SW380B, 10"	$ 30,810.00

SKID / COMPACT TRACK LOADER
OPTIONS - FIXED PRICING
SPECIFICATION 4.0

Spec #	Description	Price
4.17	**Vibratory roller:**	
	Use this section to offer vibratory roller options.	
4.17.1	CV16B, VIBRATORY COMPACTOR	$ 9,470.00
4.17.2	CV18B, VIBRATORY COMPACTOR	$ 10,150.00
4.18	**Other:**	
	Use this section to offer any other option not already covered.	
4.18.1	S305, SSL SHEARS - 9.4" JAW OPENING	$ 23,510.00
4.18.2	MATERIAL HANDLING ARM, 84", 2,000 LB. CAPACITY	$ 1,320.00
4.18.3	MB200, MIXING BUCKET	$ 5,510.00
4.18.4	MB250, MIXING BUCKET	$ 5,770.00
4.19	**EXTENDED WARRANTY OPTIONS**	
	Use this section to offer performance/warranty options, number these items starting with 20.1, 20.2, 20.3, etc. **(Specify years, miles or hours extended term covers.)**	
4.19.1	3 Year / 3,000 Hour Powertrain Warranty	$ 1,170.00
4.19.2	3 Year / 4,000 Hour Powertrain Warranty	$ 1,360.00
4.19.3	3 Year / 5,000 Hour Powertrain Warranty	$ 1,580.00
4.19.4	3 Year / 3,000 Hour Powertrain + Hydraulics + Technology Warranty	$ 2,040.00
4.19.5	3 Year / 4,000 Hour Powertrain + Hydraulics + Technology Warranty	$ 2,370.00
4.19.6	3 Year / 5,000 Hour Powertrain + Hydraulics + Technology Warranty	$ 2,740.00
4.19.7	3 Year - 3,000 Hour Premier Warranty	$ 3,960.00
4.19.8	3 Year - 4,000 Hour Premier Warranty	$ 4,610.00
4.19.9	3 Year - 5,000 Hour Premier Warranty	$ 5,330.00
4.19.10	4 Year / 3,000 Hour Powertrain Warranty	$ 1,360.00
4.19.11	4 Year / 4,000 Hour Powertrain Warranty	$ 2,260.00
4.19.12	4 Year / 5,000 Hour Powertrain Warranty	$ 2,570.00
4.19.13	4 Year / 3,000 Hour Powertrain + Hydraulics + Technology Warranty	$ 2,370.00
4.19.14	4 Year / 4,000 Hour Powertrain + Hydraulics + Technology Warranty	$ 3,940.00
4.19.15	4 Year / 5,000 Hour Powertrain + Hydraulics + Technology Warranty	$ 4,470.00
4.19.16	4 Year - 3,000 Hour Premier Warranty	$ 4,600.00
4.19.17	4 Year - 4,000 Hour Premier Warranty	$ 7,670.00
4.19.18	4 Year - 5,000 Hour Premier Warranty	$ 8,710.00
4.19.19	5 Year / 3,000 Hour Powertrain Warranty	$ 1,570.00
4.19.20	5 Year / 4,000 Hour Powertrain Warranty	$ 2,560.00
4.19.21	5 Year / 5,000 Hour Powertrain Warranty	$ 3,990.00
4.19.22	5 Year / 3,000 Hour Powertrain + Hydraulics + Technology Warranty	$ 2,720.00
4.19.23	5 Year / 4,000 Hour Powertrain + Hydraulics + Technology Warranty	$ 4,460.00
4.19.24	5Year / 5,000 Hour Powertrain + Hydraulics + Technology Warranty	$ 6,970.00
4.19.25	5 Year - 3,000 Hour Premier Warranty	$ 5,300.00
4.19.26	5 Year - 4,000 Hour Premier Warranty	$ 8,670.00
4.19.27	5 Year - 5,000 Hour Premier Warranty	$ 13,550.00
4.19.46	*does not include travel charges	
4.19.47	*see attached warranty statement	

4.20 NEW EQUIPMENT RENTAL PROGRAM

If rental programs are available on the new equipment offered, with the option to purchase, list the hourly/weekly/monthly rental rate. Indicate the percent of rental fee paid by the purchaser that will be applied to the purchase price. See Solicitation Special Terms & Conditions.

Hourly Rental Rate:	$35.00
Weekly Rental Rate:	$1,300.00
Monthly Rental Rate:	$3,900.00
Percent (%) of Rental Fee applied to purchase price:	100%

If the new rental equipment is purchased and finance

Charges are applicable for the actual rental term only.

State the actual interest rate here: Prime + 3%

4.21 VENDOR OWNED RENTAL RETURN OR DEMO EQUIPMENT PROGRAM

(See Solicitation Special Terms and Conditions.)

DEDUCT cost per Used Hour from the original Contract Price: $20.00

4.22 DELIVERY STARTING POINT - City, State, Zip: Nearest Ziegler Location

(See Special Terms and Conditions - no flat rate allowed.) **Price Per Loaded Mile:** $3.00

4.23 INSTALLATION - PER HOUR (Hourly Shop Rate):

Installation services may be requested on an "as needed" basis - see special terms and conditions.) $138.00

4.24 PRICE FOR ADDITIONAL MANUALS (1 of each included at no cost, per specs)

ADDITIONAL SERVICE MANUAL		
	Digital	$ 50.00
	Paper	$ 950.00
ADDITIONAL PARTS MANUAL		
	Digital	$ 50.00
	Paper	$ 50.00
PRICE FOR ADDITIONAL OPERATIONS MANUAL		
	Digital	$ 50.00
	Paper	$ 50.00

4.25 DISCOUNT OFF LIST PRICE FOR RELATED PARTS & ACCESSORIES %

(See Special Terms and Conditions)