US Department
of Transportation

**Federal Highway
Administration**

Noise Barrier Cost Reduction Procedure STAMINA 2.0/OPTIMA: User's Manual

0

FHWA-DP-58-1
Demonstration Projects Program
April 1982

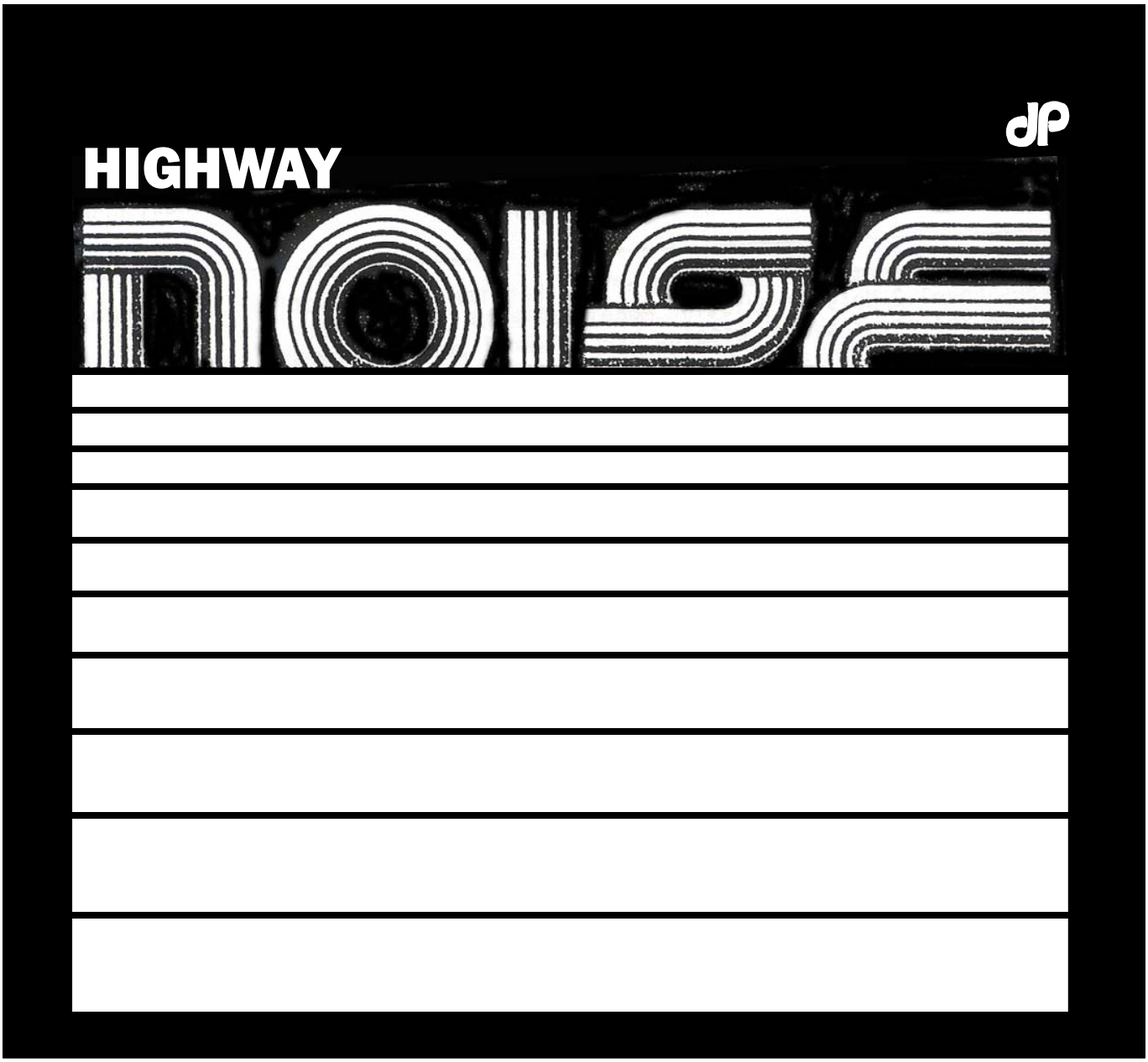

Technical Report Documentation Page

1. Report No.	2. Government Accession No.	3. Recipient's Catalog No.
FHWA-DP-58-1		

4. Title and Subtitle	5. Report Date
Noise Barrier Cost Reduction Procedure STAMINA 2.0/OPTIMA: Users Manual	April 1982 Revised 3/83
	6. Performing Organization Code HDP-15
7. Author(s) Edited by William Bowlby, John Higgins, Jerry Reagan	8. Performing Organization Report No. FHWA-DP-58-1
9. Performing Organization Name and Address U.S. Department of Transportation Federal Highway Administration Demonstration Projects Division 1000 North Glebe Road, Arlington, VA 22201	10. Work Unit No. (TRAIS) 11. Contract or Grant No.
12. Sponsoring Agency Name and Address U.S. Department of Transportation Federal Highway Administration Demonstration Projects Division 1000 North Glebe Road, Arlington, VA 22201	13. Type of Report and Period Covered Interim 14. Sponsoring Agency Code HPD-15

15. Supplementary Notes

The original user's manual was prepared by C.W. Menge of Bolt, Beranek, and Newman under contract number DTFH61-80-C-00035.

16. Abstract

This manual presents the operation of the Barrier Cost Reduction (BCR) Procedure. The FHWA Level 2 Noise Prediction Model (STAMINA 1.0) has been modified to calculate the sound energy passing over several barrier segment heights in one run. The information is then used in an interactive program (OPTIMA) which can guide the user to the most efficient noise barrier design.

The user is shown, step-by-step, how to input information and to interrupt the output results for both STAMINA and OPTIMA.

17. Key Words	18. Distribution Statement
Highway Traffic Noise Prediction, Abatement, Barrier Cost Reduction, Noise Barrier Design	Document is available to the public through the National Technical Information Service, Springfield, Virginia 22161.

19. Security Classif. (of this report)	20. Security Classif. (of this page)	21. No. of Pages	22. Price
Unclassified	Unclassified	102	

Form DOT F 1700.7 (8-72) **Reproduction of completed page authorized**

TABLE OF CONTENTS

Page

LIST OF FIGURES v

LIST OF TABLES ix

SECTION 1. OVERVIEW OF THE BCR PROCEDURE 1-1

1.1 Purpose 1-1

1.2 Structure and Flow 1-1

1.3 Background 1-3

1.4 Program Description 1-3

1.5 Principal Features 1-4

1.5.1 Barrier height change process 1-4
1.5.2 Effectiveness / cost ratios 1-4
1.5.3 Cost 1-4
1.5.4 Time-sharing nature and new format 1-5
1.5.5 Shield factors 1-5

1.6 BCR Graphics 1-5

1.7 Organization of the User's Manual 1-5

2. STAMINA 2.0

2.1 Differences Between STAMINA 2.0 and 1.0 2-1

2.1.1 Time-sharing nature 2-1
2.1.2 Input format 2-1
2.1.3 Barrier height changes 2-1
2.1.4 Barriers on elevated structure 2-2
2.1.5 Revised alpha factor operation 2-2
2.1.6 Shielding factors 2-3
2.1.7 Normal STAMINA output 2-3
2.1.8 "Acoustics" output 2-4
2.1.9 A-weighted sound level only 2-4
2.1.10 Roadway segment sound level contributions 2-4
2.1.11 Change in input parameter capabilities 2-5

TABLE OF CONTENTS (CONT'D)

Page

2.2 Guidelines for Problem Formulation 2-5

2.2.1 Roadways and traffic flow conditions 2-5
2.2.2 Barriers 2-6
2.2.3 Alpha factors 2-8
2.2.4 Shielding factors 2-8
2.2.5 Priorities in the propagation path 2-9
2.2.6 Formulating geometry and problem size 2-9

2.3 Input to STAMINA 2.0 2-10

2.3.1 Input format 2-10
2.3.2 Option and title lines 2-11
2.3.2A Plotting Parameters 2-14
2.3.3 Data block sequence 2-14
2.3.4 Vehicle parameters 2-14
2.3.5 Roadway parameters 2-18
2.3.6 Barrier parameters 2-23
2.3.7 Receiver parameters 2-32
2.3.8 Alpha factors 2-35
2.3.9 Shielding factors 2-39
2.3.10 End of data line 2-41
2.3.11 Sample STAMINA 2.0 input data file 2-41

2.4 Output From STAMINA 2.0 2-41

2.4.1 "User-oriented" output file 2-43
2.4.2 Error messages 2-46
2.4.3 "Acoustics" output file 2-48
2.4.4 BCR Message File 2-51

3. OPTIMA 3-1

3.1 Input to OPTIMA 3-1

3.2 Effectiveness/Cost Ratios Calculation 3-5

3.2.1 Barrier effectiveness 3-5
3.2.2 Cost 3-6
3.2.3 Barrier height above ground 3-6
3.2.4 E/C and barrier height matrix 3-6

3.3 Choosing First Barrier Design 3-9

3.3.1 Meaning of E/C ratios 3-9

TABLE OF CONTENTS (CONT'D)

Page

3.3.2 Concept of a balanced design 3-9
3.3.3. Matrix of barrier heights 3-10

3.4 Results Computation 3-10

3.4.1 Barrier height selection 3-10
3.4.2 Leg (h) computation 3-10
3.4.3 Cost computation 3-10
3.4.4 Barrier segment sound level contributions 3-12
3.4.5 Generation of a profile plot of the results 3-12

3.5 Interaction and Looping 3-12

3.5.1 First loop: new barrier design 3-12
3.5.2 Second loop: rerun OPTIMA from beginning 3-16
3.5.3 Third loop: rerun STAMINA 3-16

3.6 OPTIMA Output File 3-17

3.7 Guidelines for OPTIMA 3-17

3.7.1 Population weighting 3-17
3.7.2 Comparing E/C ratios 3-21
3.7.3 Fine tuning barrier design 3-22

4. SAMPLE PROBLEMS 4-1

4.1 STAMINA 2.0 Sample Problem 4-2

4.1.1 Free Field 4-2
4.1.2 Depressed Freeway 4-2
4.1.3 Elevated Freeway 4-2
4.1.4 Grade Adjustment 4-18
4.1.5 Extra Vehicle Type 4-18
4.1.6 Noise Wall 4-18
4.1.7 Shielding 4-28

4.2 STAMINA 1.0 Manual Example Problem 2 4-28

4.3 Example Problem 3 – Structure Barrier 4-28

4.3.1 Industrial Road Only 4-28
4.3.2 Industrial Road and Freeway 4-28
4.3.3 Industrial Road and Freeway with Viaduct 4-43

TABLE OF CONTENTS (CONT'D)

Page

4.3.4 Industrial Road, Freeway with Viaduct, and Reflective Barrier 4-43
4.3.5 Industrial Road, Freeway with Viaduct, and Structure Barrier 4-43

4.4 OPTIMA Sample Problem 4-75

4.4.1 OPTIMA – Run 1 4-75
4.4.2 OPTIMA – Run 2 and Run 3 4-81

5. BCR GRAPHICS 5-1

5.1 Purpose 5-1

5.2 Structure 5-1

5.3 STAMINA Graphics 5-1

5.3.1 Input Format 5-1
5.3.2 Option Line 5-1
5.3.3 Plotting Parameters 5-3
5.3.4 "Acoustics" Output File 5-7
5.3.5 The STAMINA Plot 5-7

5.4 OPTIMA Graphics 5-10

5.4.1 Input Format 5-10
5.4.2 Creating a Plot File 5-10
5.4.3 The OPTIMA File 5-12

REFERENCES R-1

APPENDIX A: BASIC FORMULATION OF THE COMPUTERIZED PREDICTION MODEL A-1

B: BLANK CODING FORMS B-1

LIST OF FIGURES

Page

FIGURE 1. BCR PROCEDURE FLOW DIAGRAM 1-2

2. FORM 1 – PROJECT DESCRIPTIONS 2-12

3. FORM 2 – VEHICLE PARAMETERS..... 2-17

4. FORM 3 – ROADWAY PARAMETERS..... 2-19

5. FORM 4 – BARRIER PARAMETERS 2-24

6. BARRIER INFORMATION FOR STAMINA 2.0 2-27

7. BARRIER HEIGHT PERTUBATION PROCESS,
DELZ = 2 FT, AND P = 2 2-28

8. "STRUCTURE" NOISE BARRIER..... 2-30

9. FORM 5 – RECEIVER PARAMETERS 2-33

10. FORM 6 – SOUND PROPAGATION DATA 2-36

11. SAMPLE STAMINA 2.0 INPUT DATA FILE 2-42

12. STAMINA 2.0 OUTPUT FOR SAMPLE DATA..... 2-44

13. ACOUSTICS OUTPUT FOR SAMPLE DATA..... 2-50

13A. BCR MESSAGE FILE FOR SAMPLE DATA..... 2-52

14. OPTIMA: INITIAL OUTPUT AT TERMINAL..... 3-2

15. BARRIER MATERIAL TYPE AND RECEIVE WEIGHTING DATA3-4

16. BARRIER COST DATA BLOCK 3-7

17. BARRIER E/C RATIOS AND HEIGHT MATRIX 3-8

18. BARRIER HEIGHT SELECTION AND RESULTS..... 3-11

18A. BARRIER SEGMENT SOUND LEVEL CONTRIBUTIONS..... 3-13

19. BCR PROCEDURE FLOW DIAGRAM 3-14

Page

FIGURE 20. LOOPING BACK TO OPTIMA FOR A NEW DESIGN 3-15

20A. OPTIMA OUTPUT FILE 3-18

21. EXAMPLE 1A FREE FIELD 4-3

22. EXAMPLE 1A INPUT DATA 4-10

23. EXAMPLE 1B OUTPUT 4-11

24. EXAMPLE 1B DEPRESSED FREEWAY 4-12

25. EXAMPLE 1B INPUT DATA 4-13

26. EXAMPLE 1B OUTPUT 4-14

27. EXAMPLE 1C ELEVATED FREEWAY 4-15

28. EXAMPLE 1C INPUT DATA 4-16

29. EXAMPLE 1C OUTPUT 4-17

30. EXAMPLE 1D GRADE ADJUSTMENT 4-19

31. EXAMPLE 1D INPUT DATA 4-20

32. EXAMPLE 1D OUTPUT 4-21

33. EXAMPLE 1E EXTRA VEHICLE TYPE 4-22

34. EXAMPLE 1E INPUT DATA 4-23

35. EXAMPLE 1E OUTPUT 4-24

36. EXAMPLE 1F NOISEWALL 4-25

37. EXAMPLE 1F INPUT DATA 4-26

38. EXAMPLE 1F OUTPUT 4-27

39. EXAMPLE 1G HOUSE SHIELDING 4-29

Page

FIGURE 40. EXAMPLE 1G INPUT DATA 4-30

41. EXAMPLE 1G OUTPUT 4-31

42. EXAMPLE PROBLEM 2 4-32

43. ROADWAY, BARRIER, AND RECEIVER COORDINATES 4-33

44. EXAMPLE 2 INPUT DATA 4-34

45. EXAMPLE 2 OUTPUT 4-35

46. EXAMPLE 3A INDUSTRIAL ROAD 4-37

47. EXAMPLE 3A INPUT DATA 4-38

48. EXAMPLE 3A OUTPUT 4-39

49. EXAMPLE 3B INDUSTRIAL ROAD AND FREEWAY 4-40

50. EXAMPLE 3B INPUT DATA 4-41

51. EXAMPLE 3B OUTPUT 4-42

52. EXAMPLE 3C INDUSTRIAL ROAD AND FREEWAY with VIADUCT 4-44

53. EXAMPLE 3C INPUT DATA 4-45

54. EXAMPLE 3C OUTPUT 4-46

55. EXAMPLE 3D INDUSTRIAL ROAD, FREEWAY with VIADUCT, AND REFLECTIVE BARRIER 4-48

56. EXAMPLE 3D INPUT DATA 4-49

57. EXAMPLE 3D OUTPUT 4-50

58. EXAMPLE 3E INDUSTRIAL ROAD, FREEWAY with VIADUCT, AND STRUCTURE BARRIER 4-53

59. EXAMPLE 3E INPUT DATA 4-70

60. EXAMPLE 3E OUTPUT 4-72

LIST OF FIGURES (CONTD.)

Page

FIGURE 61. OPTIMA EXAMPLE PROBLEM 4-76

62. OPTIMA EXAMPLE PROBLEM INPUT DATA..... 4-77

63. OPTIMA EXAMPLE PROBLEM OUTPUT..... 4-78

64. OPTIMA – HEADING, TITLE, RECEIVER and BARRIER IDENTIFIERS 4-79

65. OPTIMA – BARRIER AND RECEIVER DATA..... 4-80

66. OPTIMA – E/C RATIOS and BARRIER HEIGHT MATRICES, And BARRIER HEIGHT SELECTIONS..... 4-82

67. OPTIMA – RESULTS, RUN 1 4-83

68. OPTIMA – RESULTS, RUN 2 4-84

69. OPTIMA – RESULTS, RUN 3 4-85

70. OPTION LINE MODIFIED FOR GRAPHICS..... 5-2

71. FORM 1 – PROJECT DESCRIPTION 5-4

72. FORM P – PLOTTING PARAMETERS 5-5

73. STAMINA ACOUSTIC FILE..... 5-8

74. STAMINA PLAN PLOT 5-9

75. OPTIMA PLOT REQUEST, RUN 1..... 5-13

76. OPTIMA PLOT REQUEST, RUN 2..... 5-14

77. OPTIMA PROFILE PLOT 5-17

LIST OF TABLES

Page

Table 1. Coefficients for A-Weighted Reference Energy Mean Emission Levels 2-15

1. OVERVIEW OF THE BCR PROCEDURE

The BCR (Barrier Cost Reduction) procedure is a computer process employed to predict highway noise and design noise barriers; the BCR procedure requires the use of two separate computer programs.

1.1 Purpose

The fundamental purpose of the BCR procedure is to enable the highway noise control engineer to design cost-efficient highway noise barriers. The BCR procedure allows the user to examine effectiveness and cost of many different barrier design configurations very quickly and cheaply. The procedure also allows the designer to develop an optimum noise barrier design—one that provides the desired protection for the least cost.

1.2 Structure and Flow

The BCR procedure requires the use of two separate computer programs. The first program is a modified version of FHWA's STAMINA 1.0 [1]. This modified STAMINA is called STAMINA 2.0. The second computer program is an interactive program called OPTIMA, which must run on a time-sharing computer system.

Figure 1, the BCR Procedure Flow Diagram, illustrates the way the BCR procedure is designed to operate. First, the user provides input data to STAMINA 2.0, which produces two separate forms of output. One output is very similar to that produced by STAMINA 1.0. The other output, the "acoustics" output, is required by OPTIMA as input. The acoustics output frm STAMINA 2.0 can go either to a disk file or magnetic tape.

OPTIMA, the interactive barrier design program, gets most of the data it requires from the acoustics output from STAMINA 2.0. The user also supplies some information via a computer terminal. (An interactive program is one in which the computer system prompts the user to supply the required information by asking a series of questions.) OPTIMA then prints some intermediate output to the terminal; on the basis of this output, the user decides on an appropriate barrier design and enters code numbers representing his choice. OPTIMA immediately prints out the results of that design choice: the noise level at each receiver, and the total cost of the barrier system. The user then has the option of running through the program many times to examine other barrier designs.

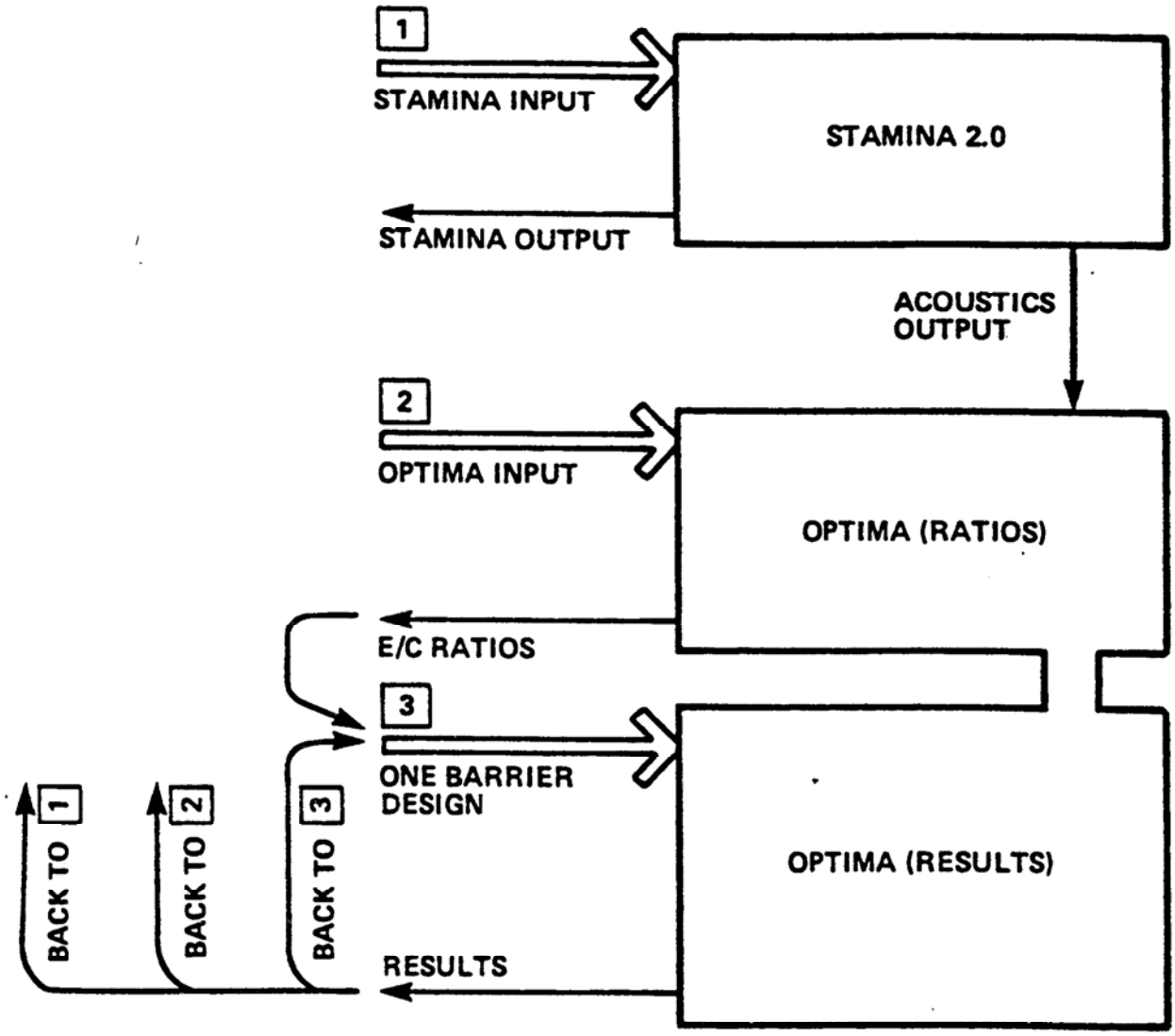

FIGURE 1. BCR PROCEDURE FLOW DIAGRAM

1.3 Background

The STAMINA 2.0 program is another step in an evolutionary process begun in the early 1970's. The original highway noise prediction computer program was developed by Bolt Beranek and Newman Inc. (BBN) under contract to the U.S. Department of Transportation, and published in 1972 [2]. The Transportation Systems Center made a few modifications to the program and published a user's manual [3]. After this, the program became one of the Federal Highway Administration's approved traffic noise prediction methods, and the popularly s the "TSC Method" of traffic noise prediction. Further refinements and updates of the program were implemented by Science Applications Inc., under contract to the FHWA from 1974 to 1979 [4, 5, 1].

The first versions of the BCR procedure programs were created by BBN in 1976 for the Interstate Division for Baltimore City, to implement cost-efficient barrier designs for the city's interstate highway system [6]. At that time, the BCR procedure was based on a modified version of the TSC Method program [3], and a new interactive barrier-design program called COSBEN. The present version of the BCR procedure, documented herein, is based on a modified version of STAMINA 1.0 [1], and a refined and updated version of COSBEN.

1.4 Program Description

The STAMINA 2.0 program performs all of the highway traffic noise prediction. The basic problem that the STAMINA code considers is the estimation of the acoustic intensity at a receiver location resulting from a series of straight line roadway segments (the source). The source characteristics are defined by speed-dependent reference noise emission levels and vehicle density by vehicle type. The geometry is three dimensional. The program considers characteristics of the source-receiver path by including the effects of intervening barriers, topography, trees, and atmospheric absorption. The geometry associated with the roadway-receiver configuration is illustrated in Appendix A, Figure A-1.

The OPTIMA program calculates noise barrier effectiveness and cost based on the "acoustic" output from STAMINA 2.0 and other data supplied by the user. Working at an interactive computer terminal, the user is provided with effectiveness/cost information for each barrier, at several heights. The user selects a set of barrier heights and is immediately given the results (noise level at each receiver and total cost of the barrier system). Based upon the results, the user can quickly change barrier heights to improve (optimize) the cost efficiency of the barrier system.

1.5 Principal Features

1.5.1 Barrier height change process

The basis of the BCR procedure is in the barrier height change process. From information supplied in the input to STAMINA 2.0, the program changes the height of each barrier section so that several heights are examined. The barrier effectiveness information for each height is stored in the "acoustics" output of STAMINA 2.0 and used later by OPTIMA for barrier design.

1.5.2 Effectiveness/cost ratios

OPTIMA calculates the ratio of the effectiveness to the cost of each barrier section at each height. The effectiveness of a barrier, as defined in OPTIMA, relates to the reduction in sound energy the barrier provides and to the number of people affected by the barriers. (See Appendix A for details.) The effectiveness/cost ratio provided by OPTIMA gives the user essential information to design a cost-efficient barrier system.

1.5.3 Cost

OPTIMA calculates the total construction cost of each barrier design examined by the user. This cost data is very useful when comparing the merits of different barrier systems.

1.5.4 Time-sharing nature and new format

The whole BCR procedure runs on a time-sharing computer system, from a terminal. As a result, the input format of STAMINA 2.0 has been changed from a column-oriented format (as in STAMINA 1.0) to a free format. STAMINA 2.0, however, is still basically a "batch-mode" program. The user creates a data file, either at the terminal or on cards, which is submitted for execution by STAMINA 2.0.

1.5.5 Shielding factors

STAMINA 2.0 allows for input of a constant, in dB, to be applied as excess attenuation between each roadway and receiver. This constant, called the "shielding factor," can be used to apply additional attenuation produced by shielding from buildings, rows of houses, trees, or other terrain features.

1.6 BCR Graphics

To assist the user with verifying input data and presenting the output results, a graphics package has been incorporated into the BCR. Graphics are available from either a paper plotter or graphic CRT terminal.

1.7 Organizational of the User's Manual

With a few exceptions, this user's manual is organized in the order in which the user is expected to use the programs.

Section 2 discusses the STAMINA 2.0 program. First, the differences between STAMINA 2.0 and STAMINA 1.0 are presented. Then, some general guidelines on STAMINA 2.0 are presented. Then a detailed discussion of input requirements with sample data is given. Last, the STAMINA 2.0 outputs are discussed, with sample data.

Section 3 discusses the OPTIMA program. Working with examples, the user is "walked through" the interactive program. A discussion of guidelines on problem formulation for OPTIMA is also presented.

Section 4 presents a series of example problems illustrating use of the various features of STAMINA 2.0 and OPTIMA.

Section 5 discusses the BCR graphics. First, a general discussion of the graphics feature is presented. Then a detailed discussion of the required input to STAMINA 2.0 and OPTIMA, with examples is given.

Appendix A presents a discussion of the basis of much of the acoustics and effectiveness calculations in the BCR programs.

Appendix B contains blanking coding forms.

2. STAMINA 2.0

2.1 Differences Between 2.0 and 1.0

This section discusses the modifications made in developing STAMINA 2.0 to STAMINA 1.0. The specifics on data input are presented in Section 3.

2.1.1 Time-sharing nature

STAMINA 2.0 will run on both time-sharing and batch computer systems. Since OPTIMA requires a time-sharing system because of its interactive nature, STAMINA 2.0 is set up so that it can operate on the same system. In this way the "acoustics" output from STAMINA can go to a disk file, which then serves as input for OPTIMA, with no handling required. STAMINA 2.0 is, however, still a batch programmable to be run via terminal or cards.

2.1.2 Input format

The format of the input to STAMINA 2.0 is a free format, rather than the column-oriented format required by STAMINA 1.0. The free format is appropriate for input file creation from a computer terminal. In free format, pieces of data are separated by a space (or spaces) or a comma.

The input format has also been changed slightly in the way roadway endpoint and barrier endpoint identifiers and alpha factors are entered. (See Sec. 2.2 for details.)

2.1.3 Barrier height changes

In STAMINA 1.0, the user had to formulate a new problem for each change in barrier height. In STAMINA 2.0, the user can select a trial barrier height and then change the height, in fixed increments, above and below this trial height. The energy passing over these different barrier heights is stored in the "acoustic" file for later use in OPTIMA.

2.1.4 Barriers on elevated structure

The STAMINA program treats barriers as semi-infinite in the vertical plane: the barrier extends from the defined top edge infinitely downward; no sound energy can pass beneath the barrier. In designing complicated barrier systems, however, it is often desirable to include as part of the system a barrier built along the edge of an elevated portion of a roadway. Often there are at-grade roadways located on the far side of the elevated structure; sound energy would, in fact, pass beneath the structure to the receiver. In these situations, the barriers located on the elevated structure will be identified in the input data as "structure" barriers. The "structure"

barriers will reduce the sound energy emanating from traffic on the elevated structure. Sound energy from all other roadways will not be affected by the structure barriers.

2.1.5 Revised alpha factor operation

The way that alpha factors and barriers interact is different in STAMINA 2.0 than it was in STAMINA 2.0 than it was in STAMINA 1.0. Alpha factors are adjustments to the sound propagation rate designed to be used to account for the excess attenuation of sound propagation over soft ground. When alpha equals 0.5, the line source sound propagation rate is adjusted to 4.5 dB per distance doubling (DD) between the specified roadway and receiver. (The free field propagation rate, appropriate for hard ground, is 3 dB/DD, where alpha equals 0.0). If the source-to-receiver propagation path is near the soft ground surface, 4.5 dB/DD is an appropriate rate.

When a barrier is placed between the source and receiver, the propagation patch is moved higher—up and over the top of the barrier. The higher propagation path will not provide as much "ground-effect" attenuation as the lower path did, suggesting that a propagation rate closer to 3 dB/DD should be used for prediction purposes. STAMINA 1.0 defaulted the propagation rate (from 4.5 dB/DD to 3.0 dB/DD) when any barrier attenuation was encountered. This resulted in an abrupt slight <u>increase</u> in the sound level at a receiver as the barrier height was increased past a certain point.

STAMINA 2.0 has been changed to operate in the following manner. For each vehicle type-roadway-barrier-receiver combination, the program computes both the barrier attenuation and the ground-effect attenuation and stores only the larger of the two. (The ground-effect attenuation is the difference in levels that results from using a 4.5 dB/DD rate compared to the 3 dB/DD propagation rate.) This procedure provides a smoothly varying sound level at the receiver as barrier height is increased. In fact, the barrier only appears effective (causes a decrease in no-barrier sound level) when it is high enough to overcome the loss of ground-effect attenuation. In other words, no insertion loss will be reported until the calculated barrier attenuation exceeds the calculated ground-effect attenuation. Therefore, the program directs the user away from barriers at (low) heights that would not be effective.

2.1.6 Shielding factors

STAMINA 2.0 allows for input of a constant, in dB, to be applied as excess attenuation between each roadway and receiver. This constant, called the "shielding factor," is similar to the alpha factor in that one is identified for each roadway-receiver combination, but dissimilar in the way it works. The alpha factor changes the sound <u>propagation rate</u>, whereas the shielding factor changes the sound <u>level</u> directly.

Shielding factors can be used to apply additional attenuation caused by shielding by buildings, rows of houses, trees, or other terrain features. In addition, the use of shielding factors in appropriate when terrain shielding is <u>clearly additive</u> to attenuation provided by a barrier

adjacent to a roadway, as STAMINA 2.0 cannot accurately deal with two "barriers" between source and receiver.

If a shielding factor is specified, no conditions of the program, such as presence of a barrier, will override it. It will always be applied to the corresponding roadway receiver pair.

2.1.7 Normal STAMINA output

STAMINA 2.0 produces an output file with information similar to the output produced by STAMINA 1.0. However, the format has been modified to make it more readable.

2.1.8 "Acoustics" output

STAMINA 2.0 produces information relating to the effectiveness and dimensions of barriers. This information is then used by the OPTIMA program to guide the user in barrier design. In order to transfer the required information, STAMINA 2.0 creates an output file, which can be stored and later read by OPTIMA at the user's convenience.

The program stores the barrier effectiveness information in terms of the total sound energy that passes over a barrier section from all sources to each receiver. The sound energy values (where Energy = Antilog (Sound Level/10) and Sound Level = 10 Log (Energy)) are stored in a matrix. A matrix is generated for each receiver and contains sound energy numbers for each barrier section at each height. These sound energy numbers are required by OPTIMA for barrier effectiveness and sound level calculations.

In addition to the sound energy calculations, STAMINA 2.0 also calculates the length and heights of each barrier section and stores that information in the acoustics output file. The barrier dimension information is required by OPTIMA for cost calculations and tabulation for user reference.

The details of the contents and format of the acoustics output are discussed in Sec. 2.4.3.

2.1.9 A-weighted sound level only

STAMINA 2.0 calculates noise levels for the overall A-weighted sound level only. Octave bend calculations are not available.

Because STAMINA 2.0 only passes <u>energy</u> information to OPTIMA, OPTIMA outputs only the hourly A-weighted energy-equivalent sound level, Leg(h), or as listed in the output, LEQ(H). STAMINA 2.0 does, however, still compute L10(h) values. However, the L10(h) values should not be used for roadways where the factor of "hourly volume" times "distance to receiver" divided by "vehicle speed" is under 200. (See reference 8.)

2.1.10 Roadway Segment Sound Level Contributions

The receiver sound level criterion feature of STAMINA 1.0 is operational in STAMINA 1.0 is operational in STAMINA 2.0, however, the criterion level has been set internally for 40 dBA.

2.1.11 Change in Input Parameter Capabilities

The following table shows the differences in allowable maximum number of input parameters between STAMINA 1.0 and STAMINA 2.0.

Input Parameter	STAMINA 1.0	STAMINA 2.0
Extra Vehicle Types	1	5
Roadways	20	30
Segments per roadway	10	14
Barriers	20	20
Segments per barrier	10	9
Receivers	15	40

2.2 Guidelines for Problem Formulation

This section presents discussions of recommended practices as well as characteristics and limitations of the STAMINA 2.0 program. More detail will appear in the "Input" section (Sec. 2.3).

2.2.1 Roadways and traffic flow conditions

STAMINA 2.0 describes a roadway by the traffic flow conditions and the series of straight-line roadway segments defined for the roadway. STAMINA allows traffic flow conditions for a maximum of 8 vehicle source types and 30 roadways. A maximum of 14 segments per roadway is allowed.

No increase in prediction accuracy is achieved by defining a straight-line roadway by a series of straight-line roadway segments. Computing time is directly related to the number of combinations of roadway segment/receiver configurations. Roadways may intersect or coincide geometrically.

STAMINA 2.0 does not allow horizontal plane (X,Y) intersection of roadway segments with barrier segments. If such an intersection occurs for a set of input data, the program will stop execution. For a situation with a barrier on an overpass, the user may choose to define the lower road as separate roadways on either side of a barrier.

A single roadway can be used to model a multi-lane highway using the geometric mean distance from source to receiver, $\sqrt{D_n D_f}$, based upon the near-lane (D_n) distance and the far-lane distance lane (D_f). However, if several receivers are specified at different distances close to the highway, each parallel lane or pair of lanes should be coded as a separate roadway.

For upgrade roadway segments, the user may specify that heavy truck noise emissions be increased. The user must treat each traffic flow direction separately when including grade as a parameter in the noise prediction.

The program describes a traffic flow condition as a combination of vehicle speed and hourly vehicle volume (vehicles per hour) for each of the vehicle types recognized by the program. The predicted energy mean levels and percentile levels are associated with an hourly time period.

The program pre-defines three vehicle types: cars, medium trucks, and heavy trucks. The program models traffic flow conditions based upon the noise emission characteristics of each vehicle type. The pre-defined vehicle types all consider the vehicle noise emissions as a function of vehicle speed. The user does not have to include these three vehicle types in every run. Also, the user may define additional vehicle types by specifying three constants to define the vehicle's noise emission characteristics (details in Sec. 2.3.4).

2.2.2. Barriers

STAMINA 2.0 models using Fresnel diffraction theory. (See Appendix A, Sec. A.6.) A barrier is defined by up to 9 straight-line segments, and the program allows the user to define a maximum of 20 barriers. Each straight-line segment defines the top edge of a thin vertical plane through which sound cannot be transmitted. The program defines a barrier by its top edge only and does not recognize a bottom edge for the barrier.

Each barrier is defined as being either acoustically absorptive or reflective. As defined by the program, absorptive barriers are pure acoustical absorbers (absorption coefficient of 1.0) whereas reflective barriers are pure acoustical reflectors (absorption coefficient of 0.0). Absorptivity and reflectivity characteristics apply to both sides of a barrier. The diffraction calculations used to estimate barrier attenuation are not dependent upon the absorptive characteristics declared for the barrier. The user may specify a "structure barrier" , one to be applied to an elevated structure under which sound must pass (see Secs. 2.1.4. and 2.3.6 for details). A structure barrier is considered acoustically absorptive by the program.

In general, the user should specify noise-abatement barriers as absorptive because of the program limitations, the small effect (less than 3 dB), and the increased computational cost of making barriers reflective. The program can only deal with one reflection of a given sound path from one barrier. This limitation prevents STAMINA 2.0 from accurately predicting the substantial degradation of barrier attenuation caused by multiple reflections between parallel vertical barriers on both sides of the highway. To deal with this situation, the user is referred to the "parallel barrier nomograph" described in Sec. 4.4. of Ref. 7.

If more than one barrier is encountered in the receiver-source (road subsegment), STAMINA 2.0 will retain only the most effective barrier in terms of reduction in sound resulting from diffraction. This choice is based only on the "baseline" height (Z coordinate) of each barrier. Once the most effective barrier is chosen, the program will ignore the presence of other barriers in that source-receiver path. This characteristic of the program can present a problem when the height of the chosen barrier is reduced in the height change process. The user is therefore cautioned to be aware of the limitations of placing many barriers in the source-receiver path. If shielding caused by buildings or rows of houses is expected to be additive to that provided shielding with shielding factors rather than with barriers (see Secs. 2.1.6 and 2.2.5).

Barrier attenuation is limited to 20 dB maximum for free-standing walls. The effects of diffraction of sound around the ends of a barrier are ignored (but, of course, direct propagation past the ends is considered). The excess attenuation often associated with earth berms compared to vertical walls is not calculated by STAMINA 2.0. However, the additional 3 dB attenuation provided by earth berms can be included as a shielding factor (see Sec. 2.2.4). The shielding factors should not be used when a wall is placed on top of the berm or atop a cut section.

Barriers may not intersect roadways. However, they may intersect other barriers.

For a discussion of the program's mathematical basis of barrier attenuation caused by diffraction, see App. A, Sec. A.6.

2.2.3 Alpha factors

The use of alpha factors enables the user to change the sound propagation rate between the source and receiver. This feature is useful for propagation over grass-covered or "soft" ground. Alpha factors are specified between each roadway and receiver.

Although STAMINA 2.0 will accept any alpha factor whose value is greater than –1.0, only two values, 0.0 and 0.5, are generally used for highway noise propagation. For an alpha value of 0.0, the propagation rate is 3 dB per distance doubling (dB/DD), appropriate for propagation over hard ground or for an elevated roadway or receiver. For an alpha value of 0.5, the propagation rate is 4.5 dB/DD, appropriate for propagation over soft ground with an at-grade roadway and first-floor receiver.

In STAMINA 2.0, if both an alpha factor attenuation (excess over 3 dB/DD) and barrier diffraction are encountered in the source-receiver path, the program will store only the larger of the two attenuations. See Sec. 2.1.5 for further discussion on interaction with barriers.

The user may find it appropriate to define separate roadways based on whether they are at grade, since alpha factors are assigned on the basis of roadway-receiver pairs.

2.2.4 Shielding factors

The use of shielding factors allows a user to apply excess attenuation in decibels between specified roadways and receivers. Shielding factors can be used to apply additional attenuation caused by shielding by buildings, rows of houses, trees , or other terrain features. Since the attenuation specified in a shielding factor is always applied, the shielding factor attenuation supplied by any other path parameters, such as barriers or alpha factors.

The user may find the use of shielding factors most appropriate to model the shielding effects of rows of houses and trees that are between the receiver and the roadside barrier under design. The user is cautioned that any specified shielding factor attenuation will apply to the highest barrier under investigation. Therefore, the user should ensure that the shielding effects of the houses or trees will remain when the propagation path to the receiver is raised to the elevation of the barrier top.

The user may find it appropriate to define separate roadways based on the relation of the shielding and receivers to the roadway, since shielding factors are assigned on the basis of roadway-receiver pairs.

2.2.5 Priorities in the propagation path

STAMINA 2.0 has built-in priority system that eliminates the effects of certain path parameters while retaining the effects of others. Each priority decision is made for the smallest source-receiver element that the program works with, that is, for each roadway subsection and each receiver.

- If an effective barrier and a nonzero alpha factor are in the same path, the program calculates the effects of both and keeps the greater of the two excess attenuation values (see Sec. 2.1.5. for further discussion). This comparison and choice is performed at all barrier heights.

- If more than one barrier is in the path, the program retains only the most effective of the barriers. The choice is made on the <u>baseline</u> (Z coordinate) height of each barrier. After this choice, only the chosen barrier will be “seen” by that roadway-receiver pair, independent of the height the barrier attains during the barrier height change process.

- Shielding factors cannot be overridden.

2.2.6 Formulating geometry and problem size

To avoid input errors and resulting program execution errors, the user should prepare a scale plot of the site to formulate coordinates for all geometric elements. Also, the user should not locate coordinate points of barriers, roadways, or receivers within 2 feet (0.6 m) of each other. Further, roadways and barriers should not cross when their X and Y coordinates are plotted (plan view). To assist the user, computer graphics have been added to STAMINA, and are discussed in Section 5.

In general, problems should be set up so that each neighborhood is examined in a separate run. OPTIMA calculates effectiveness/cost (E/C) ratios based on the combined sound energy reduction for <u>all</u> receivers. Therefore, the E/C ratios will be most useful if all receivers are in the same general area. (However, the user can manipulate the receiver population weightings in the OPTIMA input so that this recommendation need not be followed. See Sec. 3.7.1.) The user should choose each receiver to represent a relatively homogeneous group of houses, or part of school, or portion of park, so that propagation characteristics entered via alpha and shielding factors can be easily chosen as representative.

The neighborhood can be modeled with as many receivers as desired (although STAMINA computation time is directly proportional to number of receivers), but all pertinent roads and all appropriate potential barriers must be included in one run of STAMINA 2.0. This requirement is based on the barrier design process. Since, during barrier design, the E/C ratios of all barrier sections are compared, all potential barriers must be available for comparison. The user must exercise judgment in this matter, however. For example, barrier sections that are several thousand feet from the receivers are unlikely to have acceptably high E/C ratios, and they will significantly increase STAMINA computation time. In addition, all roadways that contribute significant noise must be included in one run. If roadways are left out, the sound energy values will not accurately represent the actual total sound energy, and, as a result, the E/C ratios will be inaccurate for the barriers under design.

2.3 Input to STAMINA 2.0

STAMINA 2.0 input can be keypunched on 80-column cards or entered into a data file using a computer terminal. In either method, a blank or comma must be used to separate all input data. In the following discussion, one line of input is equivalent to one computer card of input.

2.3.1 Input format

STAMINA 2.0 allows a free input format rather than a column-oriented format; the free format is convenient for file creation at a computer terminal. Some of the features of the free format are as follows:

The delimiter to be used between data entries on one line (card) is a space (blank) or comma (,).

If an effective barrier and a nonzero alpha factor are in the same path, the program calculates the effects of both and keeps the greater of the two excess attenuation values (see Sec. 2.1.5. for further discussion). This comparison and choice is performed at all barrier heights.

- The delimiter to be used between data entries on one line (card) is a space (blank) or comma, (,).
- The delimiter to be used between lines is a carriage return-line feed (CR or return key).
- Decimal points are not required for floating point numbers with only zeros to the right of the decimal point.
- Alphanumeric character strings used for endpoint identifiers must be enclosed in single quotes (apostrophes (‘)). In some cases, an alphanumeric character is used as a delimiter at the end of a series of lines; it must be enclosed in single quotes and followed by a slash (e.g.,, ‘L’ /).

Coding forms or worksheets have been prepared to assist the user in preparing input for STAMINA 2.0. Their use will be illustrated throughout this section. Appendix B. contains a set of blank coding forms.

2.3.2 Option and title lines

The input to STAMINA 2.0 consists of an optional “option” line, followed by a title line and by a title line and by up to six types of data: vehicle, roadway, barrier, receiver, propagation, and shielding data. These data types are referred to as “data blocks.” “Form 1 – Problem Description” contains the option and title lines and is shown in Figure 2. The sketch in Figure 2 shows a sample problem that will be followed throughout most of this section on data input.

Option Line

The option line is an optional first line of the input stream. It consist of five parameters, following an asterisk, which must be placed in the first space. Each of the parameters is either a Y or an N. (They must be entered after the asterisk with no spaces or commas.) These codes are triggers for Metric or English units in input and output, for bypassing reflection calculations, for plotting the input data, and whether or not to run the STAMINA calculations. The options invoked are as follows:

Parameter		Value
Input Units	Y = Metric	N = English (1)
Output Units	Y = Metric	N = English (1)
Reflection Calculations	Y = Calculate	N = Bypass (1)
Plot Data	Y = Plot	N = Bypass (1) (2)
STAMINA Calculations	Y = Run (1)	N = Bypass

(1) = Default values, If Option Line is not used.
(2) = Refer to Sectoin 5 for plotting information.

U.S. DEPARTMENT OF TRANSPORTATION
FEDERAL HIGHWAY ADMINISTRATION
DEMONSTRATION PROJECTS PROGRAM

STAMINA 2.0
FHWA TRAFFIC NOISE PREDICTION PROGRAM

NAME _____
PAGE ____ OF ____
DATE _____
PROJECT _____

FORM 1 - PROJECT DESCRIPTION

****PLACE A SPACE OR COMMA BETWEEN ITEMS ON SAME LINE WHEN KEYPUNCHING OR ENTERING ITEMS ON TERMINAL****

'OPTIONS' LINE (OPTIONAL)

	METRIC IN?	METRIC OUT?	COMPUTE REFLECTIONS	PLOT DATA	RUN CALCULATIONS
*	N	N	N	Y	Y

STAMINA 2.0 ASSUMES INPUT DATA WILL BE IN ENGLISH UNI' PRINTS OUTPUT DATA IN ENGLISH UNITS. DOES NOT COMPUTE REFLECTIONS FROM 'REFLECTIVE' BARRIERS. DOES NOT PLOT INPUT DATA AND WILL RUN ALL NOISE COMPUTATIONS. TO CHI ANY OF THESE ITEMS CODE AN ASTERISK. THEN A Y FOR YES AN N FOR NO FOR ALL ITEMS USING THE FIRST 6 COLUMS ONI IF PLOTTING DATA IS REQUESTED. FORM P MUST BE FILLED (

PROBLEM TITLE (MAXIMUM 80 CHARACTERS, ENTER AS ONE LINE)

EXAMPLE OF STAMINA 2.0 DATA INPUT

NOTES/SKETCH:

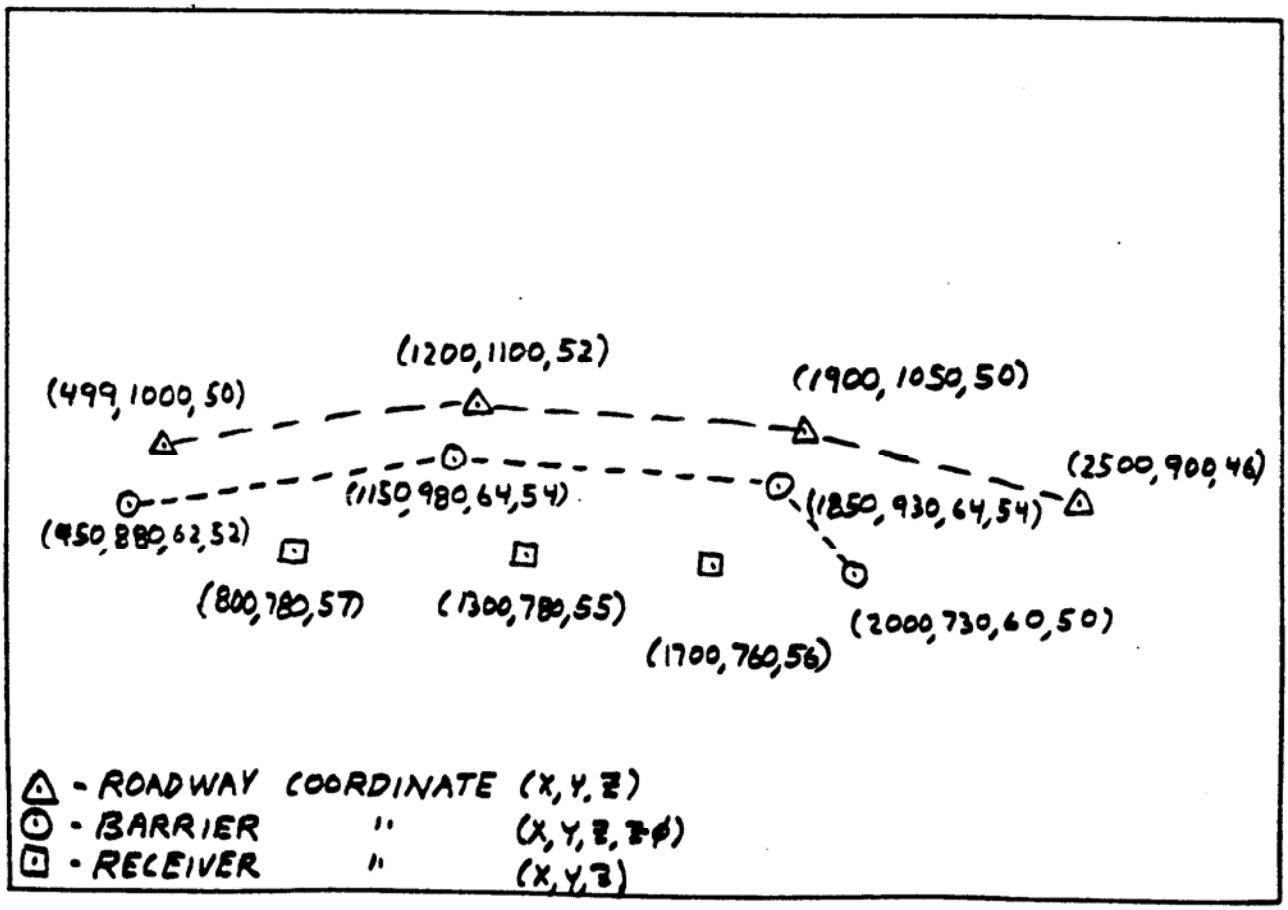

FIGURE 2. FORM 1 - PROJECT DESCRIPTION

REV/ 3/83

A portion of Form 1 showing the option line is included below:

'OPTIONS' LINE (OPTIONAL)

	METRIC IN?	METRIC OUT?	COMPUTE REFLECTIONS	PLOT DATA	RUN CALCULATIONS
*	N	N	N	Y	Y

STAMINA 2.0 ASSUMES INPUT DATA WILL BE IN ENGLISH UNITS. PRINTS OUTPUT DATA IN ENGLISH UNITS. DOES NOT COMPUTE REFLECTIONS FROM 'REFLECTIVE' BARRIERS. DOES NOT PLOT INPUT DATA AND WILL RUN ALL NOISE COMPUTATIONS. TO CHANGE ANY OF THESE ITEMS CODE AN ASTERISK. THEN A Y FOR YES OR AN N FOR NO FOR ALL ITEMS USING THE FIRST 6 COLUMS ONLY. IF PLOTTING DATA IS REQUESTED. FORM P MUST BE FILLED OUT.

Although Metric units can be used in STAMINA 2.0, OPTIMA requires English units. Therefore, all of the data in the "acoustics" output from STAMINA 2.0, is in English units, regardless of the choices made in the option line.

The option line is not a mandatory input. If it is not present, the program will default to accept all input in English units, to produce output listing in English units, and to omit all reflection computations, not plot the input data set, and run the noise computations.

The units assumed by the program under the options selected by the user are as follows:

PARAMETER	METRIC	ENGLISH
Length	Metre	Foot
Traffic Flow Rate	Vehicles Per Hour	Vehicles Per Hour
Vehicle Speed	Kilometers Per Hour	Mile Per Hour

Title Line

The title line is the second line in the data set if the option line is used. It is mandatory, and contains arbitrary alphanumeric description information in spaces 1 through 80.

PROBLEM TITLE (MAXIMUM 80 CHARACTERS. ENTER AS ONE LINE)
EXAMPLE OF STAMINA 2.0 DATA INPUT

The title permits the user to identify specific projects. The title line is printed on the output of both STAMINA 2.0 and OPTIMA.

2.3.2A Plotting Parameters

After the Options and Title lines have been entered, the user enters information concerning the plot, if one is desired. Please refer to Section 5.3.3 Plotting Parameters for a detailed explanation. Figure 72 "Form P – Plotting Parameters" shows the input required by the plotting routine. This information is entered only when a plot has been requested from the option line.

Data block sequence

Data blocks following the title line may be arranged in an arbitrary sequence, except that alpha and/or shielding data blocks must follow the receiver block. Each data block is identified by an index as follows:

INDEX	DATA BLOCK
1	Vehicle Parameters
2	Roadway Parameters
3	Barrier Parameters
5	Receiver Parameters
6,1	Alpha Factors
6,2	Shielding Factors

Each data block is preceded by a block control line containing the data block index in the first space.

A complete data set must specify, as a minimum, the following data blocks:

INDEX	DATA BLOCK
1	Vehicle Parameters
2	Roadway Parameters
5	Receiver Parameters

If the barrier parameter data block or the shielding factor data block are omitted, all calculations involving those parameters are bypassed by STAMINA 2.0. However, without the barrier data block, OPTIMA cannot be used.

2.3.4 Vehicle parameters

This data includes the number of vehicle types in the problem and emission level data got newly specified vehicle types in addition to the standard three types. "Form 2 – Vehicle Parameters" (Figure 3) is used to record this data. The standard three vehicle types are: C (cars), MT (medium trucks), and HT (heavy trucks). Their source heights are fixed in the code at 0.0, 2.3, and 8.0 feet, respectively. These heights may be changed by changing the STAMINA 2.0 code (see Program Maintenance Manual, page 3-2). The coefficients for calculation of noise emission levels for these three vehicle types are fixed and are tabulated in Table 1.

TABLE 1. Coefficients for A-Weighted Reference Energy Mean Emission

Vehicle Type	Coefficients for Overall A-Weighted Sound Level at 50 feet (15m)		
	C_o	C_1	S_o

Where $(L_o E = C_o + C_1 \log (V) + 0.115 S_o^2$

$(L_o)_E$ is the Energy Mean Emission Level at 50 feet (15m)

V is the vehicle speed in miles per hour

Number of Vehicle Types

The line for the number of vehicle types has two entries. The first entry is the integer 1, the index for vehicle parameters. The second entry is an integer specifying the total number of vehicle types in the problem. This integer may take on values from 3 (as minimum) to 8 (when 5 additional vehicle types are specified).

1	4	NUMBER OF VEHICLE TYPES IF EQUAL TO 3.00 TO FORM 3

If a value of 3 is entered, the program will handle only cars, medium trucks, and heavy trucks and the user may then proceed to the roadway data block. If a value of 4 through 8 is entered, the user must provide emission level data for the other vehicle types.

Additional Vehicle Types

Figure 3 shows the input form where additional vehicle types must be added. Source height and noise emission level data are added in two lines for each additional vehicle type.

The first line contains the integer code as the first entry, the real number vehicle source height as the second entry, and up to 16 characters of description enclosed in single quotes as the third entry. The first additional vehicle type is designated as the fourth vehicle type; it has integer code 6 (codes 3, 4, and 5 are assigned within the STAMINA 2.0 program to cars, medium trucks, and heavy trucks, respectively) and a vehicle type code 'VEH4". (This vehicle type code must be used in the roadway data blocks, Form 3).

On the second line, the three coefficients for specifying the noise emission level for the additional vehicle type are entered. These coefficients, C_o, C_1, and S_o, are to be entered in the indicated sequence, on one line. The real number coefficients define the overall A-weighted reference energy mean emission level, (L_o), at 50 feet (15m), as follows:

$$(L_o)_E = C_o + C_1 \log (V) + 0.115\, S_o^{\,2},$$

where V = vehicle speed in miles per hour

U.S. DEPARTMENT OF TRANSPORTATION
FEDERAL HIGHWAY ADMINISTRATION
DEMONSTRATION PROJECTS PROGRAM

STAMINA 2.0
FHWA TRAFFIC NOISE
PREDICTION PROGRAM

NAME _____
PAGE ____ OF ____
DATE _____
PROJECT _____

FORM 2 - VEHICLE PARAMETERS

14	NUMBER OF VEHICLE TYPES IF EQUAL TO 3, GO TO FORM 3)

FILL OUT REMAINDER OF FORM WHEN 'NUMBER OF VEHICLE TYPES' EXCEEDS 3

EMISSION LEVEL(EL) VARIABLES— $EL=C0+C1(LOG(SPEED))+0.115(S0)^2$

	SOURCE HEIGHT	C0	C1	S0
6	14.0	85	5.0	3.0

'VEH4' SOURCE HEIGHT AND EMISSION LEVEL VARIABLES

DESCRIPTION (MAX. OF 16 CHARAC)
'LOGGING TRUCK'

'VEH4' DESCRIPTION (16 CHARACTERS)

	SOURCE HEIGHT	C0	C1	S0
7				

'VEH5' SOURCE HEIGHT AND EMISSION LEVEL VARIABLES

DESCRIPTION (MAX. OF 16 CHARAC)
' '

'VEH5' DESCRIPTION (16 CHARACTERS)

	SOURCE HEIGHT	C0	C1	S0
8				

'VEH6' SOURCE HEIGHT AND EMISSION LEVEL VARIABLES

DESCRIPTION (MAX. OF 16 CHARAC)
' '

'VEH6' DESCRIPTION (16 CHARACTERS)

	SOURCE HEIGHT	C0	C1	S0
9				

'VEH7' SOURCE HEIGHT AND EMISSION LEVEL VARIABLES

DESCRIPTION (MAX. OF 16 CHARAC)
' '

'VEH7' DESCRIPTION (16 CHARACTERS)

	SOURCE HEIGHT	C0	C1	S0
10				

'VEH8' SOURCE HEIGHT AND EMISSION LEVEL VARIABLES

DESCRIPTION (MAX. OF 16 CHARAC)
' '

'VEH8' DESCRIPTION (16 CHARACTERS)

FIGURE 3. FORM 2 - VEHICLE PARAMETERS

REV/ 3/83

More vehicle types are added by entering the required data in a pair of lines as described above. Integer code 7 applies to the fifth vehicle type (VEH5), integer code 8 applies to the sixth vehicle type (VEH6), integer code 9 applies to the seventh vehicle type (VEH7), and integer code 10 applies to the eighth vehicle type (VEH8). The maximum allowable number of vehicle types is eight. Extra vehicle types must be given sequentially, starting with code 6 (no skipping).

Shown below is how the data illustrated in Figures 2, 3, and 72 would look if one had entered it into the computer. (The computer printout of the data and results will be shown in Section 2.4.)

```
**NNNYY
EXAMPLE OF STAMINA 2.0 DATA INPUT
PLAN YYYY
1,4
6,14.0,85,5.0,3.0
'LOGGING TRUCK'
```

2.3.5 Roadway parameters

Form 3 (Figure 4) is for coding roadway traffic and coordinate data. Sample data is entered on the form in Figure 4 to illustrate its use.

Following is a detailed discussion of the input sequence and requirements:

<u>Block Control Line</u>

The data block containing the roadway parameters is preceded by a control line requiring two integer entries. The first entry is the integer 2, the index for roadway parameters. The second entry is an integer specifying the number of "roadways" in the data set. A "roadway" is defined by a title line, one set of traffic conditions (vehicle types, volumes, and speeds) and a set of coordinates that defines the geometrical alignment of the roadway. The maximum number of roadways allowed is 30. Each roadway can be divided into 14 segments.

BLOCK CONTROL LINE

1	4	NUMBER OF ROADS

NOTES:
1. MAXIMUM OF 30 ROADWAYS PERMITTED
2. MAXIMUM OF 15 ENDPOINTS PER ROADWAY
3. USE A SEPARATE SHEET FOR EACH ROADWAY
4. ONLY ENTER BLOCK CONTROL LINE ONCE PER EACH BLOCK OF ROADWAY DATA

U.S. DEPARTMENT OF TRANSPORTATION
FEDERAL HIGHWAY ADMINISTRATION
DEMONSTRATION PROJECTS PROGRAM

STAMINA 2.0
FHWA TRAFFIC NOISE
PREDICTION PROGRAM

FORM 3 - ROADWAY DATA

NAME _____
PAGE ____ OF ____
DATE _____
PROJECT _____

BLOCK CONTROL LINE

2	1

NUMBER OF ROADS

NOTES 1. MAXIMUM OF 30 ROADWAYS PERMITTED
2. MAXIMUM OF 15 ENDPOINTS PER ROADWAY
3. USE A SEPARATE SHEET FOR EACH ROADWAY
4. ONLY ENTER BLOCK CONTROL LINE ONCE PER EACH BLOCK OF ROADWAY DATA

ROADWAY TITLE (MAXIMUM OF 60 CHARACTERS. ENTER AS ONE LINE)
ROUTE 99 FROM NOISEVILLE TO QUIETTOWN

NO. ____

VEHICLE TYPE	VEHICLES PER HOUR	SPEED
'CARS'	1000	45
'MT'	100	45
'HT'	150	45
'VEH4'	50	45
~~'VEH5'~~		
~~'VEH6'~~		
~~'VEH7'~~		
~~'VEH8'~~		

CROSS OUT IF NOT REQUIRED

'L'/

ENDPOINT ID (MAX 8 CHARAC)	EAST COORDINATE (X)	NORTH COORDINATE (Y)	ELEVATION(Z)	GA=
'R99-1'	499	1000	50	0
'R99-2'	1200	1100	52	0
'R99-3'	1900	1050	50	0
'R99-4'	2500	900	46	0
''				
''				
''				
''				
''				
''				
''				
''				
''				
''				
''				
''				
''				

DO NOT CODE
1
2
3
4
5
6
7
8
9
10
11
12
13
14
15

'L'/

=GA=GRADE ADJUSTMENT FOR HEAVY TRUCKS - 1=YES, 0=NO

FIGURE 4. FORM 3 - ROADWAY PARAMETERS

Title Line

The mandatory title line precedes at the data for each roadway, and consists of an arbitrary alphanumeric character string up to 60 characters long, followed by a carriage return. A Title Card is needed for each roadway.

ROADWAY TITLE (MAXIMUM OF 60 CHARACTERS. ENTER AS ONE LINE)	NO. ____
ROUTE 99 FROM NOISEVILLE TO QUIETTOWN	

Traffic Flow Conditions

Following the title line, the user species traffic flow conditions for the roadway. Each line consists of three entries—the vehicle type code, the vehicle volume, and the vehicle speed.

VEHICLE TYPE	VEHICLES PER HOUR	SPEED
'CARS'	1000	45
'MT'	100	45
'HT'	150	45
'VEH4'	50	45
~~'VEH5'~~		
~~'VEH6'~~		
~~'VEH7'~~		
~~'VEH8'~~		

CROSS OUT IF NOT REQUIRED

'L'/

The first entry is the vehicle type, which must be represented by one of the codes shown in the following table, and enclosed in single quotes.

Vehicle Type	Code
Automobiles	'CARS'
Medium Trucks	'MT'
Heavy Trucks	'HT'
Fourth Vehicle Type	'VEH4'
Fifth Vehicle Type	'VEH5'

Sixth Vehicle Type	'VEH6'
Seventh Vehicle Type	'VEH7'
Eighth Vehicle Type	'VEH8'

The second entry on each traffic flow line is the real number vehicle volume in vehicles per hour. If the vehicle volume is zero, leave out the vehicle type. The third entry is the real number vehicle running speed in appropriate units (km/h or mph). Speeds are limited to the range of 50 to 100 km/h (30 to 65 mph) because of the limitations of the data base of vehicle noise emission levels.

Flow data for each vehicle type are entered on separate lines as described above. Only one line of flow data is allowed for each vehicle type.

After the last line of vehicle flow data is entered, the string of vehicle flow data lines is terminated by entering a separate line with the letter L in it. The L must be enclosed in single quotes and then followed by a slash (/) and a carriage return (shown on Figure 4).

Roadway Coordinates

After the traffic flow data, the user must define the straight line roadway segments to specify the roadway alignment. For each point specifying the endpoint of a roadway segment, the user must specify X, Y, and Z coordinates of that point. Each point is specified on a separate line, with two other entries, the endpoint identifier, and the grade adjustment code.

ENDPOINT ID (MAX 8 CHARAC)	EAST COORDINATE (X)	NORTH COORDINATE (Y)	ELEVATION(Z)	GA*	DO NOT CODE
'R99-1 '	499	1000	50	0	1
'R99-2 '	1200	1100	52	0	2
'R99-3 '	1900	1050	50	0	3
'R99-4 '	2500	900	46	0	4
' '					5
' '					6
' '					7
' '					8
' '					9
' '					10
' '					11
' '					12
' '					13
' '					14
' '					15

*GA=GRADE ADJUSTMENT FOR HEAVY TRUCKS - 1=YES, 0=NO

'L' /

The first entry on each line is the endpoint identifier. This alphanumeric character string may be up to 8 characteristics long, and must be enclosed in a single quotes. If an endpoint ID is not desired, a space (blank) can be substituted for the ID, between the quotes (' ').

The next three entries on the coordinate line are the real number X, Y, and Z (elevation) coordinates of the roadway endpoint, to be entered in the indicated sequence, and with appropriate units (meters or feet).

The final entry on the coordinate line is the code for the grade adjustment. The integer 1 indicates that the grade adjustment should be calculated and applied for the line segment following that endpoint; the integer 0 is specified when no grade adjustment is desired. The grad adjustment code must be given to the last endpoint of the roadway even though no line segment follows it. (The operation of the grade adjustment is discussed below.)

Each coordinate line is entered sequentially, beginning with the initial point defining the roadway. Each roadway may have up to 15 endpoints (coordinate lines) comprising 14 straight-line segments. The last coordinate line must be followed by a 'L'/ line to terminated the string of roadway endpoints.

Grade Adjustment

STAMINA 2.0 allows the user to adjust the noise emissions for heavy trucks moving up grades. The program, however, does not allow the user to define a traffic flow direction. To include grade adjustments, the user must decided if a straight-line segment is an upgrade segment. If the straight line segment is upgrade, then the user may include the grade adjustment by entering the integer 1 after the Z coordinate of the coordinate point defining the beginning of the straight line segment. The grade adjustment factor (0 of 1) must be included for each roadway segment.

STAMINA calculates the actual roadway grade using the coordinate points as entered. If the grade is less than 2%, there is no adjustment to heavy truck emission levels. If grade is between 2% and 7%, the adjustment is +1 db per percent grade, starting with 0 db for a 2% grade, and ending with +5 db for a 7% grade. The adjustment remains +5 db for grades greater than 7%.

Remember that vehicles going down the grade must not receive the grade adjustment, and in general, separate roadways must be defined for the two directions of traffic when the grade adjustment is to be employed.

Shown below is how the date illustrated in Figure 4 would look as if entered into the computer. English units are used.

```
2,1
ROUTE 99 FROM NOISEVILLE TO QUIETTOWN
'CARS'      1000,45
'MT'         110,45
'HT'         150,45
'VEH4'        50,45
'L'/
'R99-1'      499,1000,50,0
'R99-2'     1200,1100,52,0
'R99-3'     1900,1050,50,0
'R99-4'     2500,900,45,0
'L'/
```

2.3.6 Barrier parameters

Form 4 (Figure 5) is for coding barrier data. Figure 5 contains some sample date illustrated use of the form (English units are used).

Following is a detailed discussion of the input sequence and requirements.

<u>Block Control Line</u>

The data block containing the barrier parameters is preceded by a control line requiring two integer entries. The first entry is the integer 3, the index for barrier parameters. The second entry is an integer specifying the number of "barriers" in the data block. A barrier is a sequence of straight line segments defined by a series of points in space. The line segments define the top edge of the barrier, over which sound must diffract, and through which sound cannot pass. Each point's X, Y, and Z coordinates are entered on a separate line. Other information including the barrier point identifier and the ground height are also entered on each line. A maximum of 20 barriers may be specified. Each barrier can be divided into nine segments.

U.S. DEPARTMENT OF TRANSPORTATION
FEDERAL HIGHWAY ADMINISTRATION
DEMONSTRATION PROJECTS PROGRAM

STAMINA 2.0
FHWA TRAFFIC NOISE
PREDICTION PROGRAM

FORM 4 - BARRIER DATA

NAME _____
PAGE ____ OF ____
DATE _____
PROJECT _____

BLOCK CONTROL LINE

3	1

NUMBER OF BARRIERS

NOTES 1. MAXIMUM OF 20 BARRIERS PERMITTED
2. MAXIMUM OF 10 ENDPOINTS PER BARRIER
3. USE A SEPARATE SHEET FOR EACH BARRIER
4. ONLY ENTER BLOCK CONTROL LINE ONCE FOR BARRIER DATA

BARRIER TITLE (MAXIMUM OF 60 CHARAC.). ENTER AS ONE LINE.

NO. _____

BARRIER ALTERNATIVE NO.1 - WRAP
RIGHT END

ENDPOINT ID (MAX 8 CHARAC)	EAST COORDINATE (X)	NORTH COORDINATE (Y)	BARRIER TOP ELEVATION(Z)	BARRIER GROUND ELEVATION(ZG)	DELZ*	P**
'B1-STA90'	450	880	62	52	2	2
'B2-STA99'	1150	980	64	54		
'B3-ST106'	1850	930	64	54		
'B4-WRAP'	2000	730	60	50		
' '						
' '						
' '						
' '						
' '						
' '						

*DELZ=BARRIER HEIGHT INCREMENT IN FEET
**P=NUMBER OF HEIGHT CHANGES, MAX=3

'A'/ BARRIER TYPE A=ABSORPTIVE
R=REFLECTIVE
S=STRUCTURE

FOR STRUCTURE BARRIERS ONLY, ENTER THE FOLLOWING LINE:

NO. OF ROADS AFFECTED	AFFECTED ROADWAY NUMBERS (ASSIGNED SEQUENTIALLY BY PROGRAM)											

FIGURE 5. FORM 4 - BARRIER PARAMETERS

BLOCK CONTROL LINE

3	1

NUMBER OF BARRIERS

NOTES 1. MAXIMUM OF 20 BARRIERS PERMITTED
2. MAXIMUM OF 10 ENDPOINTS PER BARRIER
3. USE A SEPARATE SHEET FOR EACH BARRIER
4. ONLY ENTER BLOCK CONTROL LINE ONCE FOR BARRIER DATA

Title Line

Following the control line described above is the title line for the first barrier, a single line of arbitrary alphanumeric characters up to 50 characters long, which applies to the entire barrier parameters data block. The purpose of this title line is primarily to identify that barrier's data clearly in the printout of the input data. Each barrier must have its own title line.

BARRIER TITLE (MAXIMUM OF 50 CHARAC.). ENTER AS ONE LINE.
BARRIER ALTERNATIVE NO. 1 - WRAP RIGHT END

NO._____

First Barrier Line

Following the title line, the first line for the first barrier is entered. Seven entries are required for this line. These entries are the barrier point ID, the X, Y, and Z (elevation) coordinates, the ground height (Z_0), the incremental height change (DELZ), and the number of height changes (P).

ENDPOINT ID (MAX 8 CHARAC)	EAST COORDINATE (X)	NORTH COORDINATE (Y)	BARRIER TOP ELEVATION(Z)	BARRIER GROUND ELEVATION(Z0)	DELZ*	P**
'B1-STA90'	450	880	62	52	2	2
'B2-STA99'	1150	980	64	54		
'B3-ST106'	1850	930	64	54		
'B4-WRAP'	2000	730	60	50		
' '						
' '						
' '						
' '						
' '						
' '						

*DELZ=BARRIER HEIGHT INCREMENT IN FEET
**P=NUMBER OF HEIGHT CHANGES, MAX=9

The first entry, the barrier endpoint identifier, is an arbitrary alphanumeric character string up to eight characters long. This alphanumeric string must be enclosed in single quotes. Using an endpoint ID is recommended, because STAMINA 2.0 passes the ID to OPTIMA via the "acoustics" file. The ID appears in the OPTIMA output and aids significantly in identifying barrier sections for design purposes. If, however, the user chooses not to specify an endpoint ID, a space (blank) can be substituted, between the quotes (' ').

The next three entries on the first barrier coordinate line are the real number X, Y, and Z coordinate of the barrier endpoint, to be entered in the indicated sequence, and with appropriate units (metres or feet). The Z coordinate (elevation or height) is called the "baseline" height and serves as the height about which the barrier height changes are made, up and down.

The fifth entry, Z_0, is the "no barrier" elevation or height. Z_0 may be the height of the road surface, parapet, or ground. Z_0 is used by OPTIMA as the "no-cost" height. Cost are attributed to barriers in proportion to their height above Z_0. Z_0 is specified for each barrier coordinate point.

The sixth entry, DELZ, is the incremental height change in appropriate units (metres or feet). DELZ is specified for the entire barrier, and only appears on the first line for each barrier.

The seventh entry, P, is the number of height changes in each direction (up and down) with a maximum value of 3, at which the barrier effectiveness is evaluated is 2P + 2. Barrier effectiveness is also evaluated at the baseline height (Z), about which the changes are made, as well as the ground height (Z_0)

(Figures 6 and 7 illustrate the input and barrier height change concept.) Note DELZ and P are specified for each barrier, not each barrier segment. A total of 8 barrier heights (including ground height) can be evaluated.

The user must specify DELZ and P such that the lowest barrier height (given by Z – (DELZ) (P)) is above (greater than) Z_0 for each coordinate point of the barrier.

If the user does not wish the barrier heights to change, zero values must be specified for DELZ and P. Also, Z_0 can be set equal to Z if DELZ and P and zero. STAMINA

2.0 will then calculate barrier effectiveness at one height only ($Z=Z_0$). This option is useful when buildings are entered as barriers.

BARRIER 1 TYPE(A) BARRIER ALTERNATE NO. 1 - WRAP RT. END

	---------COORDINATES----------					
	X	Y	Z	ZO	DELZ	P
B1-STA90	450.	880.	62.	52.	2.	2
B2-STA99	1150.	980.	64.	54.		
B3-ST106	1850.	930.	64.	54.		
B4-WRAP	2000.	730.	60.	50.		

FIGURE 6. BARRIER INFORMATION FOR STAMINA 2.0

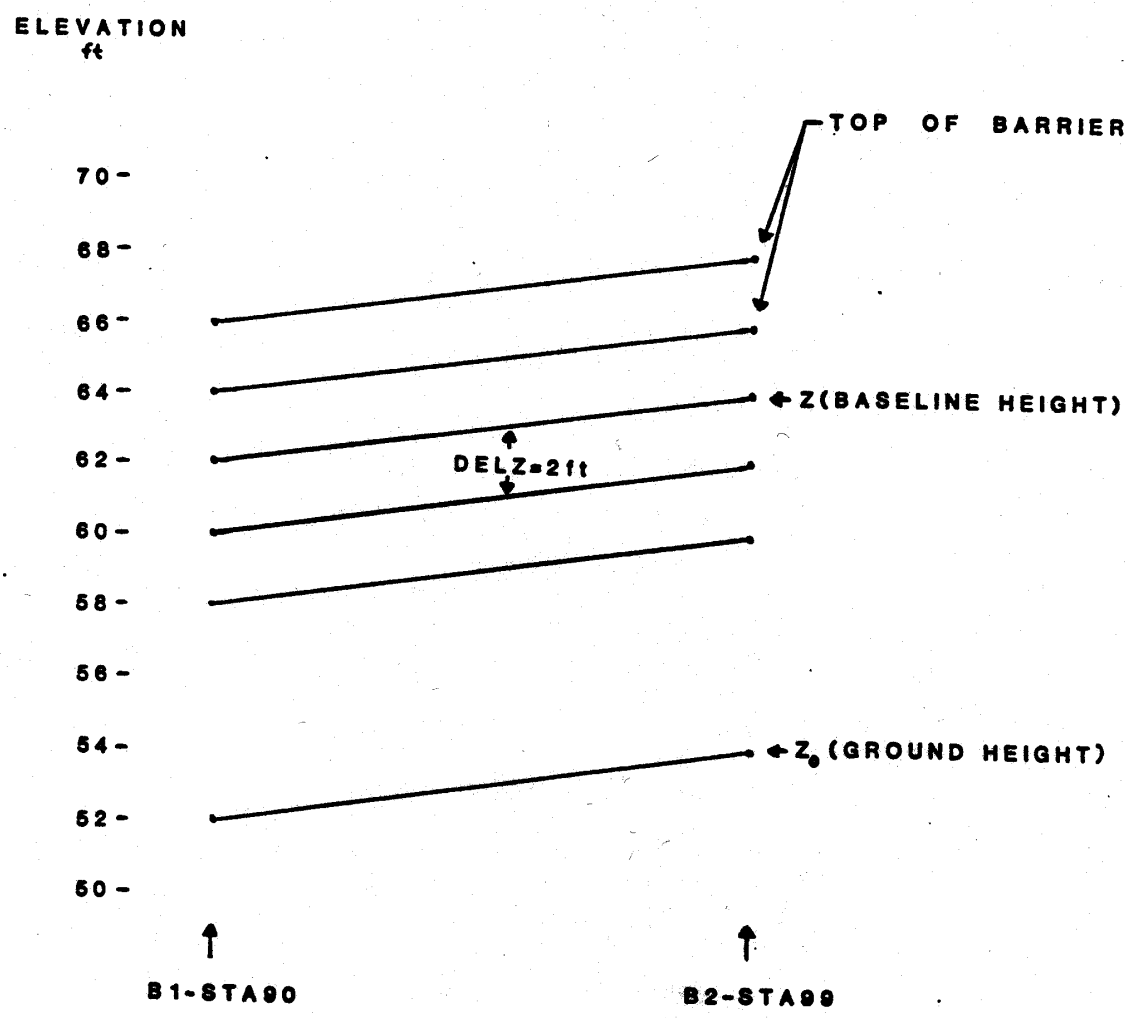

FIGURE 7. BARRIER HEIGHT PERTURBATION PROCESS, DELZ= 2 FT., AND P= 2.

Other Barrier Coordinate Lines

Following the first barrier coordinate line, additional lines specifying end point coordinates are entered sequentially. Each of these barrier coordinate lines requires five entries, in the same format and sequence as the first five entries of the first barrier line. They are the barrier end point ID, and the X, Y, Z, and Z_0 coordinates. Each barrier may have up to 10 endponits (coordinate lines) comprising 9 straight line segments. The last coordinate line must be followed by a barrier termination line, which indicates the "type" of the preceding barrier the user wishes to specify.

Barrier Termination Line -- Barrier Type

The user has a choice of three "types" of barrier to specify, which are indicated by code letters in the termination line. The types are Absorptive (Code = A), Reflective (Code = R, and "Structure" (Code = S). The type code must be enclosed in single quotes and followed by a slash (/).

' A ' /	**BARRIER TYPE**	**A= ABSORPTIVE** **R= REFLECTIVE** **S= STRUCTURE**

Barrier on Elevated Structure

The user may also specify a barrier on elevated structure, a so-called "structure" barrier. This option allows the user to specify certain roadways that will be affected by the "structure" barrier. STAMINA 2.0 allows sound energy only form these identified roadways to be affected by the structure barrier. All other roadways will not "see" the barrier; however, no roadway may cross the barrier. Figure 8 illustrates a cross section where a structure barrier is to be analyzed as shielding roadways 2 and 3, but not roadway 1. This data is entered on the excerpt of Form 4 shown below, but is not shown in Figure 7.

FOR STRUCTURE BARRIERS ONLY. ENTER THE FOLLOWING LINE:

NO. OF ROADS AFFECTED	**AFFECTED ROADWAY NUMBERS (ASSIGNED SEQUENTLY BY PROGRAM)**											
2	2	3										

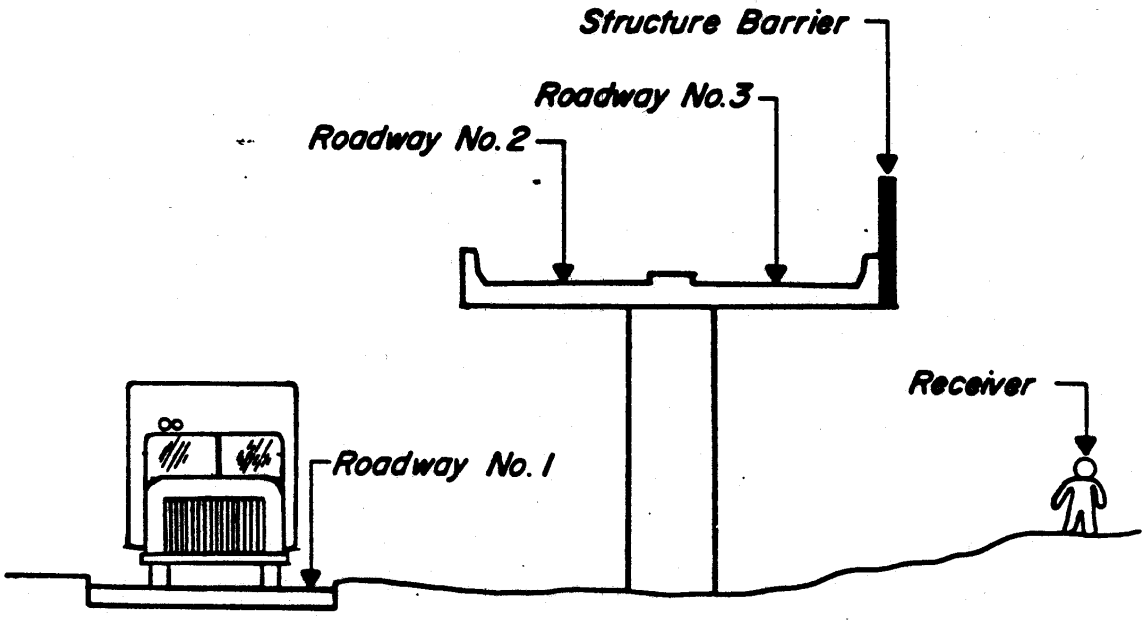

FIGURE 8. STRUCTURE BARRIER

To specify the affected roadways, the user enters and additional line of data following the termination line ('S'/). The first entry on the line is an integer representing the total number of roadways that the structure barrier was intended to shield. The following integer entries are numbers representing these affected roadways. Each of these numbers is an integer representing the sequential postion the roadway occupies in the roadway data block. In the excerpt from Form 4, the line with 2, 2, 3, would be interpreted as: There are two roadways affected by the preceding structure barrier. They would be the second and third roadways in the roadway data block.

The structure barrier option allows the user to include a barrier on an elevated roadway, while including an at-grade roadway on the far side of the elevated structure in the same STAMINA run. The elevated roadway is specified to be associated with the structure barrier, and the at-grade roadway is not. Sound from the at-grade roadway will propagate to the receiver unaffected by the "structure" barrier.

A maximum of 12 roadways may be associated with a structure barrier.

Barrier segments must not cross roadway segments. If the geometry is such that a barrier and road must cross, the road may be defined as two roadways that stop on either side of the barrier.

Typically, the user will specify an absorptive barrier -- that is, one that does not reflect sound. In that case, STAMINA 2.0 will not perform any calculations pertaining to reflections from that barrier.

The user may specify a reflective barrier, one that reflects sound. The use of reflective barriers is not generally recommend, because of the inherent limitations, small effect (usually less than 3dBA), and increased cost to run the program (see Sec. 2, Guidelines for Problem Formulation, for discussion). STAMINA 2.0 cannot correctly handle multiple reflections between barriers. For situations with parallel vertical barriers on both side of highway, see Sec. 4-4 of Ref. 7.

Shown below is how the data illustrated in Figure 7 would look as if entered in the computer:

```
3,1
BARRIER ALTERNATIVE  NO. 1 – WRAP RIGHT END
'B1-STA90'        450     880     62      52      2     2
'B2-STA90'        1150    980     64      54
'B3-ST106'        1850    930     64      54
'B4-WRAP'         2000    730     60      50
'A'/
```

2.3.7 Receiver parameters

Form 5, Figure 9, is used for receiver data. Figure 9 illustrates how data may be entered onto the form.

Following is a detailed discussion of the input sequence and requirements:

Block Control Line

The data block containing receiver parameters is preceded by a control line requiring two entries. The first entry is the integer 5, the index for receiver parameters. The second entry is an integer specifying the number of receivers in the data block. A receiver is a point at which sound levels are computed. Up to 40 receivers may be specified.

BLOCK CONTROL LINE

	NUMBER OF RECEIVERS
5	3

NOTE:
1. **MAXIMUM OF 40 RECEIVERS:**
2. **ENTER BLOCK CONTROL LINE ONLY ONCE FOR RECEIVER DATA**
3. **ENTER RECEIVER DATA TITLE ONLY ONCE.**

Title Line

Following the control line described above is the title line, a single line of arbitrary alphanumeric characters up to 80 characters long, which applies to the entire receiver parameters data block. The primary purpose of this title line is to identify the receiver data block clearly in the input sequence.

RECEIVER DATA TITLE (MAXIMUM OF 90 CHARAC. 3. ENTER ONCE. ENTER AS 1 LINE
RECEIVERS

U.S. DEPARTMENT OF TRANSPORTATION
FEDERAL HIGHWAY ADMINISTRATION
DEMONSTRATION PROJECTS PROGRAM

STAMINA 2.0
FHWA TRAFFIC NOISE
PREDICTION PROGRAM

FORM 5 - RECEIVER DATA

NAME _____
PAGE ____ OF ____
DATE _____
PROJECT _____

BLOCK CONTROL LINE

	NUMBER OF RECEIVERS
5	3

NOTE: 1. MAXIMUM OF 40 RECEIVERS;
2. ENTER BLOCK CONTROL LINE ONLY ONCE FOR RECEIVER DATA
3. ENTER RECEIVER DATA TITLE ONLY ONCE.

RECEIVER DATA TITLE (MAXIMUM OF 80 CHARAC.). ENTER ONCE. ENTER AS 1 LINE

RECEIVERS

RECEIVER ID (MAX 8 CHARAC)	EAST COORDINATE (X)	NORTH COORDINATE (Y)	ELEVATION(Z)	DO NOT CODE
R1	800	780	57	1
R2	1300	780	55	2
R3	1700	760	56	3
				4
				5
				6
				7
				8
				9
				0
				1
				2
				3
				4
				5
				6
				7
				8
				9
				0

FIGURE 9. FORM 5 - RECEIVER PARAMETERS

Receiver Coordinate Lines

Following the title line, the lines representing the receiver locations are entered; one line is entered for each receiver. Each line requires four entries: the receiver identifier, and the X, Y, and Z (elevation) coordinates.

RECEIVER ID (MAX 8 CHARAC)	EAST COORDINATE (X)	NORTH COORDINATE (Y)	ELEVATION(Z)	DO NOT COD
'R1'	800	780	57	1
'R2'	1300	780	55	2
'R3'	1700	760	56	3
''				4
''				5
''				6
''				7
''				8
''				9
''				0
''				1
''				2
''				3
''				4
''				5
''				6
''				7
''				8
''				9
''				0

The first entry, the receiver point identifier (ID), is an arbitrary alphanumeric character string up to 16 characters long. This alphanumeric string must be enclosed in single quotes. Using a receiver ID is recommended, because STAMINA 2.0 passes the ID to OPTIMA via the "acoustics" file. The ID appears in the OPTIMA ouput and aids in identifying receivers for design purposes. If, however, the user chooses not to specify a receiver ID, a space (blank) can be substituted, between the quotes.

The next three entries on each receiver line are the real number X, Y, and Z (elevation) coordinates of the receiver point. The Z coordinate is the actual elevation of the receiver to be used in the analysis, not the ground elevation. The user should avoid placing a receiver point closer than 2 ft. (0.6 m) to any roadway or barrier.

No termination line is required because the number of receivers is defined in the control line. The number of receiver coordinate lines must match the number in the control line.

The receiver data entered in the form in Figure 9 would look as follows when entered into the computer:

```
5,3
RECEIVERS
'R1'        800   780   57
'R2'        1300  780   55
'R3'        1700  760   56
```

2.3.8 Alpha factors

Form 6, Figure 10, is used to code both alpha factor and shielding factor data. Figure 10 illustrates use of the form for alpha factor data.

Following is a detailed discussion of the input sequence and requirements:

<u>Block Control Line</u>

The data block containing alpha factors is preceded by a control line requiring two integer entries. The first entry is the integer 6, the second entry is the integer 1. These two entries identify the data block as one of alpha factors.

If no alpha factor data block is included in the input sequence, all alpha factors will be set to zero.

BLOCK CONTROL LINE

	CODE
6	1

NOTES:
1. ENTER ON BLOCK CONTROL LINE: 1=ALPHA VALUES. 2= SHEILDING FACTORS.
2. ENTER BLOCK CONTROL LINE ONCE BEFORE EACH BLOCK OF SOUND PROPADATION DATA

U.S. DEPARTMENT OF TRANSPORTATION
FEDERAL HIGHWAY ADMINISTRATION
DEMONSTRATION PROJECTS PROGRAM

STAMINA 2.0
FHWA TRAFFIC NOISE
PREDICTION PROGRAM

NAME _____
PAGE ____ OF ____
DATE _____
PROJECT _____

FORM 6 – SOUND PROPAGATION DATA

BLOCK CONTROL LINE

	CODE/
6	1

NOTES: 1. ENTER CODE ON BLOCK CONTROL LINE: 1=ALPHA VALUES, 2=SHIELDING FACTORS.
2. ENTER BLOCK CONTROL LINE ONCE BEFORE EACH BLOCK OF SOUND PROPAGATION DATA

DATA BLOCK TITLE (ENTER ONCE PER DATA BLOCK, MAX. OF 80 CHARAC.)
ALPHA FACTORS

ENTER ALPHA VALUES OR SHIELDING FACTORS (IN DBA) FOR ALL RECEIVER–ROADWAY PAIR

ROADWAY NUMBERS \ RECEIVER NUMBERS	1	2	3	4	5	6	7	8	9	10
1	0.5	0	0.5							
2										
3										
4										
5										
6										
7										
8										
9										
10										

7/ 'END OF DATA' LINE. ENTER ONLY ONCE AS LAST LINE IN DATA FILE

REV/ 3/83

Title Line

Following the control line described above is the title line, a single line of arbitrary alphanumeric characters up to 80 characters long, which applies to the entire alpha factors data block. The purpose of this title line is primarily to identify the alpha factors data block clearly in the input sequence and on the printout.

DATA BLOCK TITLE (ENTER ONCE PER DATA BLOCK, MAX. OF 80 CHARAC.)
ALPHA FACTORS

Alpha Factor Lines

Following the title line, the lines listing the alpha factors are entered. (Since one alpha factor must be specified for each roadway-receiver combination, the required number of alpha factors is the product of the number of roadways and the number of receivers.) A line is entered for each roadway in the order listed in the roadway data block. On the first line, for the first roadway, the alpha factors for each receiver are entered. They must be entered in the order in which the receivers appear in the receivers data block. That is, the first alpha factor applies to the first receiver, the second alpha factor applies to the second receiver, and so on. An alpha factor must be specified for every receiver. If there are more alpha factors that can be entered on one line, the remainder must be entered on the next line.

An alpha factor is defined as a real number which usually takes on one of two values: 0.0 or 0.5. The alpha factor affects the sound propagation rate between a specified roadway and specified receiver. For alpha equal to 0.0, the propagation rate is 3 db per distance doubling (from a line source), appropriate for propagation over hard ground or for an elevated roadway or receiver. For alpha equal to 0.5, the propagation rate is 4.5 db per distance doubling, appropriate for propagation over soft ground with an at-grade roadway and first floor receiver. See Sec. 2.1.5 for additional discussion.

ENTER ALPHA VALUES OR SHIELDING FACTORS (IN DBA) FOR ALL RECEIVER-ROADWAY PAI

RECEIVER NUMBERS

ROADWAY NUMBERS	1	2	3	4	5	6	7	8	9	10
1	0.5	0	0.5							
2										
3										
4										
5										
6										
7										
8										
9										
10										

The alpha factors are entered and read (by STAMINA 2.0) in a "list-directed" format. This format gives the user the option of using a shortened method of input if several identical alpha values are repeated. Anywhere on one line that the user would normally place several identical values, he simply enters the number of identical values to be entered, then an asterisk (*) to symbolize multiplication, and finally the alpha value to be repeated. Following is an example of use of the "list-directed" format. Both sets of data are identical. (This example shows five receivers and three roadways.)

Regular Format	List-directed Format
0,0,0,0,0	5*0
.5,.5,.5,0.0,0.0	3*.5,2*0
.5,0,0,.5,.5	.5,2*0,2*.5

Remember that one line must be entered for each roadway, and the number of lines must match the number of roadways, which is entered on the control line before the roadways data block.

2.3.9 Shielding factors

Shielding factors may also be coded onto Form 6 (Figure 10). Following is a detailed discussion of the input sequence and requirements.

Block Control Line

The data block containing shielding factors is preceded by a control line requiring two integer entries. The first entry is the integer 6, the second entry is the integer 2. These two entries identify the data block as one of shielding factors.

BLOCK CONTROL LINE

	CODE
6	2

NOTES:
1. ENTER ON BLOCK CONTROL LINE: 1=ALPHA VALUES. 2= SHEILDING FACTORS.
2. ENTER BLOCK CONTROL LINE ONCE BEFORE EACH BLOCK OF SOUND PROPADATION DATA

Title Line

Following the control line described above is the title line, a single line of arbitrary alphanumeric characters up to 80 characters long, which applies to the entire shielding factors data block. The purpose of this title line is primarily to identify the shielding factors data block clearly in the input sequence.

DATA BLOCK TITLE (ENTER ONCE PER DATA BLOCK, MAX. OF 80 CHARAC.)
ALPHA FACTORS

Shielding Factor Lines

Following the title line, the lines listing the shielding factors are entered. As for alpha factors, up to two lines of shielding factors must be entered for each roadway. Also, a shielding factor for each receiver must be specified on each roadway line. Shielding factors are also entered in a list-directed format, giving the user flexibility with repeated values. The input format for shielding factors is identical to that for alpha factors (see the previous section).

A shielding factor is defined as a real number value in decibels that applies excess attenuation between a specified roadway and a specified receiver. Shielding factors can be used to apply additional attenuation due to shielding by buildings, rows of houses, trees, or other terrain features. The use of shielding factors is appropriate when terrain shielding is clearly additive to attenuation provided by a barrier adjacent to a roadway. Positive values for shielding factors are subtracted by the program for calculated levels. See Sec. 2.1.6 for additional discussion.

If no shielding factor data block is included in the input sequence, all shielding factors will be zero.

ENTER ALPHA VALUES OR SHIELDING FACTORS (IN DBA) FOR ALL RECEIVER-ROADWAY PAIR

RECEIVER NUMBERS

ROADWAY NUMBERS	1	2	3	4	5	6	7	8	9	10
1	0	3	0							
2										
3										
4										
5										
6										
7										
8										
9										
10										

Negative values can be entered for shielding factors, providing a sound increase, or amplification, rather than attenuation. Negative values might be used at building facades where an urban or suburban propagation model is being applied to show amplication due to reflections.

2.3.10 "End of data" line

At the end of the data file for a problem, the following line must be enteres sothat the program knows that it has reached the end of the file: 7/. This line is included at the bottom of Form 6 (Figure 10).

7 'END OF DATA' LINE. ENTER ONLY ONCE AS LAST LINE IN DATA FILE

2.3.11 Sample STAMINA 2.0 input data file

Presented in Figures 11 is an example of a complete input data file, representing the data discussed throughout Section 2.3 relating to the sketch in Figure 2. It is shown here only to indicate what a complete file would look like; it is not intended to illustrate all program features.

A series of more illustrative example problems, using both STAMINA 2.0 and OPTIMA, are presented in Section 4.0. Section 2.4.1 and 2.4.2 will shown what the STAMINA output files look like for this data file.

2.4 Output From STAMINA 2.0

When STAMINA 2.0 is run, two files are created as output. First is a "user-oriented" output file, discussed in Section 2.4.1. This file is printed by the computer o displayed on a CRT (cathode ray tube) screen. If the program did not correctly execute, error message will be generated in this output file. These message are discussed in Section 2.4.2.

The second output file is the "acoustics' file, which the user does not normally see, and which serves as an input file to OPTIMA. It is discussed in Section 2.4.3.

```
*NNNYY
EXAMPLE OF STAMINA 2.0 DATA INPUT
PLAN YYYY
1 4
6 14 85 5 3
'LOGGING TRUCK'
2 1
ROUTE 99 FROM NOISEVILLE TO QUIETTOWN
'CARS' 100 45
'MT' 100 45
'HT' 150 45
'VEH4' 50 45
'L'/
'R99-1' 499 1000 50 0
'R99-2' 1200 1100 52 0
'R99-3' 1900 1050 50 0
'R99-4' 2500 900 46 0
'L'/
3 1
BARRIER ALTERNATE NO. 1 - WRAP RT. END
'B1-STA90' 450 880 62 52 2 2
'B2-STA99' 1150 980 64 54
'B3-ST104' 1850 930 64 54
'B4-WRAP' 2000 730 60 50
'A'/
5 3
RECEIVERS
'R1' 800 780 57
'R2' 1300 780 55
'R3' 1700 760 56
6 1
ALPHA FACTORS
.5 0 .5
6 2
SHIELDING FACTORS
0 3 0
7/
```

FIGURE 11. SAMPLE STAMINA 2.0 INPUT DATA FILE

2.4.1 Stamina output file

STAMINA 2.0 produces an output file for the user that is a labeled and neatly formatted echo of the input data and shown some initial noise level results. The information is similar to the output of STAMINA 1.0, but the format is much easier to read.

Information appears in the STAMINA output that was not entered into the computer by the user, which is the predicted overall A-weighted sound level at each receiver location. This information is not used by OPTIMA, but serves as a check levels are based on the "baseline" barrier height--the Z coordinate height of the barriers specified in the barrier parameters data block.

Figure 12 presents a listing of the output generated by STAMINA 2.0 from the sample input data presented in Section 2.3.10. It is shown here only to illustrate the format. The example problems in Section 4.0 discuss how to use the output.

```
              STAMINA 2.0/BCR
         FHWA VERSION 3 (MARCH 1983)
        TRAFFIC NOISE PREDICTION MODEL

  (INPUT UNITS- ENGLISH , OUTPUT UNITS- ENGLISH )

EXAMPLE OF STAMINA 2.0 DATA INPUT
PROGRAM INITIALIZATION PARAMETERS

     HEIGHT       CODE          DESCRIPTION
       0.0          1     RECEIVER HEIGHT ADJUSTMENT
       1.00         2     A-WEIGHTED SOUND LEVEL ONLY
       0.0          3     HEIGHT ADJUSTMENT FOR PASSENGER CARS (CARS)
       8.00         4     HEIGHT ADJUSTMENT FOR HEAVY TRUCKS   (HT)
       2.30         5     HEIGHT ADJUSTMENT FOR MEDIUM TRUCKS  (MT)
      14.000        6     HEIGHT ADJUSTMENT FOR TYPE4 VEHICLES (VEH4)
                                                   'LOGGING TRUCK'
                          C0 =      85.00  C1 =       5.00  S0 =       3.0

ROADWAY   1      ROUTE 99 FROM NOISEVILLE TO QUIETTOWN

                     VEHICLE TYPE   VEHICLES/HOUR     SPEED
                          CARS          1000.          45.
                          HT             150.          45.
                          MT             100.          45.
                          VEH4            50.          45.
                       ------------COORDINATES-------------
                              X          Y          Z     GRADE
R99-1                         499.      1000.      50.      0
R99-2                        1200.      1100.      52.      0
R99-3                        1900.      1050.      50.      0
R99-4                        2500.       900.      46.      0


BARRIER   1   TYPE(A)     BARRIER ALTERNATE NO. 1 - WRAP RT. END

          ---------COORDINATES----------
              X         Y         Z         ZO       DELZ        P
B1-STA90     450.      880.      62.        52.        2.        2
B2-STA99    1150.      980.      64.        54.
B3-ST106    1850.      930.      64.        54.
B4-WRAP     2000.      730.      60.        50.
```

FIGURE 12. STAMINA 2.0 OUTPUT FOR SAMPLE DATA

RECEIVERS

	COORDINATES		
	X	Y	Z
R1	800.	780.	57.
R2	1300.	780.	55.
R3	1700.	760.	56.

ALPHA FACTORS - RECEIVER ACROSS,ROADWAY DOWN

1 * 0.5 0.0 0.5

SHIELDING FACTORS - RECEIVER ACROSS,ROADWAY DOWN

1 * 0.0 3.0 0.0

RECEIVER	LEQ(H)	L10
R1	66.2	69.7

ROADWAY SEGMENT SOUND LEVEL CONTRIBUTIONS EXCEEDING 40.0 DBA

ROADWAY SEGMENT

1	1	2	3
	65.4	57.6	50.2

RECEIVER	LEQ(H)	L10
R2	62.8	66.0

ROADWAY SEGMENT SOUND LEVEL CONTRIBUTIONS EXCEEDING 40.0 DBA

ROADWAY SEGMENT

1	1	2	3
	58.6	60.1	52.5

RECEIVER	LEQ(H)	L10
R3	65.7	69.3

ROADWAY SEGMENT SOUND LEVEL CONTRIBUTIONS EXCEEDING 40.0 DBA

ROADWAY SEGMENT

1	1	2	3
	56.2	63.5	60.1

FIGURE 12 (cont). STAMINA 2.0 OUTPUT FOR SAMPLE DATA

2.4.2 Error messages

The STAMINA 2.0 program prints several error messages that assist the user in either identifying illegal input data or warning the user that an error has occurred.

The error messages printed by the program and the sequence of events taken by the program in the event that an error has occurred are described below. A "fatal" error is an error that stops execution of the program. Warning messages notify the user that a non-fatal restriction on the input data or error during execution has been encountered but that the program is continuing to execute the defined problem.

The messages are listed below in alphabetical order for quick reference. They may be generated are listed below in alphabetical order for quick reference. They may be generated during data input, during a check of the input data, or during the sound level calculations, as specified below.

"*** ANGLE SUBTENDED AT RECEIVER BY ROAD SEGMENT IS APPROACHING ZERO"

INITIAL PT. OF ROAD SEGMENT (COORDINATES)

END PT. OF RAOD SEGMENT (COORDINATES)

RECIEVER POINT (COORDINATES)

STAMINA 2.0 checks for illegal operations during execution of subroutine GEOMRY. Subroutine GEOMRY conducts the calculations associated with the basic problem considered by the prediction code (see Program Maintenance Manual for BCR procedure). This message is a warning statement and the code continues execution.

"ERROR IN MOVE"

This is a fatal error message indicating that the subroutine MOVE (called by subroutine GEOMRY) has attempted to shift a point on a line of zero length. The user should check the input data for roadway segments and barrier segments.

"ERROR IN MOVE2"

This is a fatal error message indicating that the subroutine MOVE2 has attempted to shift a point on a line segment of zero length (in the X-Y plane). The user should check the input data for roadway segments and barrier segments.

"ILLEGAL BARRIER INTERSECTS ROADWAY R XX RS XX B XX BS XX"

where R XX denotes roadway number XX

RS XX denotes roadway segment number XX

B XX denotes barrier number XX

BS XX denotes barrier segment number XX.

After reading the input data, but before execution of sound level calculations, the program checks to see if a barrier segment intersects a roadway segment. The program checks for such intersections using only the X-Y coordinates of the line segments. The user can prevent such errors by using a scale plot of the site to formulate the roadway and barrier segment coordinates.

This reject error message is printed for each intersection encountered in the input data. Hence, if illegal intersections are encountered, all such illegal data will be displayed to the user. Upon completing the data check, the program stops execution of the data set containing illegal intersections. The user should check and correct the input data.

"INSUFFICIENT ROAD SECTIONS"

"INSUFFICIENT BARRIER SECTIONS"

These messages occur if the user has attempted to define either a roadway or a barrier by one coordinate point (two points minimum are required). If this error occurs, execution of the program stops. The user should correct the appropriate input data.

"TOO MANY REFLECTIONS RCV XX R XX S XX"

where RCV XX is receiver number XX

R XX is roadway number XX

S XX is roadway segment number XX.

If the maximum allowable number of reflections (eleven) is exceeded at a receiver, the program halts execution and prints this message. The user should check the receiver location in relation to the reflective barriers defined for the problem to see if simplifications in the site model are possible or to eliminate reflection calculations using the input data option.

"VEHICLE SPEED SUPPLIED IS LESS THAN 30 MPH ADJUSTED TO 30"

"VEHICLE SPEED SUPPLIED IS GREATER THAN 65 MPH ADJUSTED TO 65"

If the user has specified a vehicle speed outside the range of 30 mph to 65 mph, these warning messages are printed as appropriate. The program continues execution with the indicated adjustments for vehicle speed for the roadway being considered. If the program is operating under the Metric option, appropriate speeds in km/h are printed.

"VALUE OF P GREATER THAN 3 – RUN ABORTED"

The program has detected a value of the number of barrier height perturbations which is not in the legal limits of 0 to 3. The user should check the barrier input data.

"BARRIER HEIGHT AFTER PERTURBATION EXCEEDS 35 FEET"

Although the STAMINA program can compute the acoustics with taller than 35-foot barriers, the OPTIMA program has barrier cost data only up to 35 feet, therefore, this check was entered. The user should check the barrier Z, Z (0), DELZ, and P parameters to find the error.

"BARRIER HEIGHT AFTER PERTURBATION LESS THAN OR EQUAL TO Z (0)"

When a barrier is perturbed to or below the ground level, this error message will be printed. The user should check the barrier Z, Z (0), DELZ, and P parameters to find the error.

2.4.2 "Acoustics" output file

As discussed earlier, STAMINA 2.0 produces information relating to the effectiveness and dimensions of barriers. This information is then used by the OPTIMA program to guide the user in barrier design.

In order to transfer the required information, STAMINA 2.0 creates an output file, which can be stored (on disk or magnetic tape) and later read by OPTIMA at the user's conventions. This section describes the contents of this output file, called the "acoustics output." The user will not manipulate the information in this file; it is discussed here only for completeness.

Figure 13 shows the first portion of the acoustics output for the sample data presented in Sections 2.3.10 and 2.4.1. The first line is the problem title from the beginning of the input data. The next line lists first, the number of barriers; second, the total number of barrier sections; third and fourth, the number of barrier sections and height changes (P) for the first barrier; fifth and sixth, the number of sections and height changes for the second barrier; and so on for each additional barrier.

The next group of number s is the array of barrier section lengths, in feet.

Next is the barrier ID for the first barrier section followed by the lowest barrier height for that section and then the subsequent barrier height increments for the section. Similar pairs of lines follows for each barrier section.

The next single number is the total number of receivers. The following line shows the number 1 and the identifier for Receiver 1. This line acts as a header for the matrix for numbers that follows, which pertains only to the first receiver.

The number in the matrix are the sound energy values used for barrier effectiveness and total sound level calculations. The sound energy values [where Energy = Antilog (Sound Level/10) and Sound Level = 10 Log(Energy)] represent the total sound energy that passes over the barrier from all roadways to the first receiver. A value is calculated and tabulated at each barrier height (across) for each barrier section (down). The last single sound energy value is the "left-over" energy representing all sound energy that propagates from roadways to Receiver 1 without going over the tops of any barriers.

A similar matrix is generated for each receiver, and each matrix is headed by the receiver number and ID.

After the last receiver matrix is generated, information concerning the input data is created that is used by the OPTIMA graphics routine. Refer to Section 5 for the information needed by the graphics routine.

```
EXAMPLE OF STAMINA 2.0 DATA INPUT
    1    3    3    2
   707.11    701.78    250.03
B1-STA90
      6.00      2.00      2.00      2.00      2.00
B2-STA99
      6.00      2.00      2.00      2.00      2.00
B3-ST106
      6.00      2.00      2.00      2.00      2.00
    3
    1  R1
 0.56457D+07 0.49178D+07 0.41597D+07 0.37145D+07 0.28992D+07 0.20808D+07
 0.43002D+06 0.42637D+06 0.42116D+06 0.40890D+06 0.39172D+06 0.34854D+06
 0.40440D+05 0.40424D+05 0.40235D+05 0.39824D+05 0.39299D+05 0.38024D+05
 0.0
    2  R2
 0.15464D+07 0.59631D+06 0.53510D+06 0.48113D+06 0.39125D+06 0.29899D+06
 0.46259D+07 0.17700D+07 0.16043D+07 0.13506D+07 0.10268D+07 0.74420D+06
 0.15108D+06 0.10836D+06 0.10159D+06 0.90143D+05 0.76594D+05 0.63226D+05
 0.0
    3  R3
 0.18139D+06 0.18065D+06 0.17837D+06 0.17536D+06 0.16811D+06 0.16013D+06
 0.42007D+07 0.34562D+07 0.31625D+07 0.26587D+07 0.20374D+07 0.14822D+07
 0.12060D+07 0.11010D+07 0.10257D+07 0.87171D+06 0.67916D+06 0.51244D+06
 0.0
```

Number of Barrier Sections, and Height Perturbations

Barrier Section Lengths

Barrier Section ID's, Corresponding Height, and Increments

Total Number of Receivers

Receiver No. and ID

Matrix of Sound Energy Numbers for Receiver 1

"Left-over" Sound Energy

Second Receiver No. and ID

Sound Energy Matrix

Barrier Ht. Incr.

Barrier Section

Z(0) Z-P[ΔZ] Z Z+P[ΔZ]

FIGURE 13. ACOUSTICS OUTPUT FOR SAMPLE DATA

3. OPTIMA

OPTIMA is an interactive computer program that guides the user in designing cost-efficient noise barriers. OPTIMA obtains most of the data it requires from the acoustics file created by STAMINA 2.0.

In an interactive mode through a computer terminal, OPTIMA prompts the user to supply some additional information. OPTIMA then prints some intermediate output to the terminal; on the basis of this output, the user decides on an appropriate barrier design and enters code numbers representing his choice. OPTIMA immediately prints out the results of the design choice: the noise level at each receiver, and the total cost of the barrier system. The user then has the option of running through the program many times to examine other barrier designs.

3.1 Input to OPTIMA

To run, OPTIMA needs the name of the "acoustics" output file produced by STAMINA 2.0. How it receives this name depends on the c0mputer system on which the programs are running. The program Maintenance Manual described in detail how this works on the FHWA system. Basically, the acoustics file is given a name when the STAMINA job is submitted and that same name is given in the "execute" command for OPTIMA. That name is also given to the output file produced by OPTIMA.

However, on other systems OPTIMA may be used to interactively request this file name, after the program has been called. These lines of code have been deactivated ("commented-out") in the FHWA system's program. Also, deactivated is the code that interactively asks for a name for the OPTIMA output file.

OPTIMA accepts the acoustics file from STAMINA 2.0 exactly as it was produced; no modification is required by the user.

OPTMA, however, does require additional information to perform its effectiveness/cost analysis; this information must be entered by the user before OPTIMA can produce output.

Before requesting this information, OPTIMA prints a heading and the problem title from the STAMINA 2.0 input file (which was passed to the acoustics output file). OPTIMA also prints the receiver and barrier identifiers from the STAMINA 2.0 input data. Figure 14 shows this printout.

```
                    PROGRAM OPTIMA
                    ***********************************

                 BARRIER OPTIMIZATION PROGRAM USING
                 PARTIAL SOUND ENERGIES COMPUTER BY THE
                        STAMINA/BCR PROGRAM

                     FHWA VERSION 3 --- MARCH 1983


          PROBLEM TITLE
          ***************

EXAMPLE OF STAMINA 2.0 DATA INPUT

          RECIEVER AND BARRIER INDENIFIERS
          AS OBTAINED FROM BCR INPUT FILE
          ***********************************
RECEIVER IDENTIFIERS (NUMBER IN SYSTEM = 3)

R1      R2      R3

BARRIER IDENTIFERS      (NUMBER IN SYSTEM = 3)

B1-STA90      B2-STA99      B3-ST106
```

FIGURE 14. OPTIMA: INTIAL OUTPUT AT TERMINAL

In OPTIMA, barriers are identified by sections, whereas in STAMINA, barriers are identified by endpoints. STAMINA assigns ID's to the barrier sections for OPTIMA based on the ID for the endpoint that preceded the section as coded in the input to STAMINA (e.g., barrier section 4 would run from endpoint 4 to endpoint 5).

Figure 15 illustrates barrier material type and receiver specifications. The user enters data after each question mark (7). Entries can be made using eh list directed format that was described in section 2.3.8 (e.g., 4*0 is equal to 0,0,0,0).

There are five types of material, Berm, Masonry, Wood, Concrete, and Steel. The user must enter a barrier material type for each barrier section. If desired, different sections can be different material types.

The user must enter a number of people for each receiver. A "0" will eliminated that receiver from further effectiveness computations. This is useful when one barrier design is wanted from a STAMINA acoustics file containing more than one barrier (i.e., freeways with barriers on both sides). It is suggested that the same number of people be used for receivers with similar characteristics, for example, a "1" might be used for all receivers that are residential.

A number must then be entered for each receivers' Design Noise Level (DNL). The DNL value only affects the effectiveness/cost ratio and not the actual acoustics which is determined from the STAMINA "acoustics" file.

OPTIMA then asks if a summary of the above user entered data is wanted. After the summary, OPTIMA calculates and prints a matrix of effectiveness/cost ratios. This matrix is discussed in detail below in Sections 3.2 and 3.3. Then discussion of user interaction with the program then continues in Section 3.4.

```
        BARRIER TYPE SELECTION
        **************************

        THE FOLLOWING CODES ARE USED TO DESIGNATE MATERIAL TYPES
        (CONTRUCTION COSTS) -- DATE: 1980

        1 FH-BERM     2 FH-MASON     3 FH-WOOD    4 FH-CONC     5 FH-STEEL

ENTER TYPE NUMBER (1-5) FOR EACH BARRIER ELEMENT.  (LIST DIRECTED)
?
2 3 4

        RECEIVER SPECIFICATIONS
        *************************

        NUMBER OF PEOPLE REPRESENTED AND EXTERIOR
        DESIGN NOISE LEVEL FOR EACH RECEIVER

ENTER NUMBER OF PEOPLE PER RECEIVER (0-1000).  (LIST DIRECTED)
?
3*67

DO YOU WANT TO SEE THE SUMMARY OF BARRIER AND RECEIVER DATA
(Y/N)
?
Y

EXAMPLE OF STAMINA 2.0 DATA INPUT


        SUMMARY OF BARRIER AND RECEIVER DATA
        ****************************************

BARR ELE    ID          TYPE
        1   B1-STA90    FH-MASON
        2   B2-STA99    FH-WOOD
        3   B3-ST106    FH-CONC

REC NO.     REC ID      PEOPLE      DNL
        1   R1          1.          67%
        2   R2          1.          67%
        3   R3          1.          67%
```

FIGURE 15. BARRIER MATERIAL TYPE AND RECEIVER WEIGHTING DATA

3.2 Effectiveness/Cost Ratios Calculation

To guide the user in selecting a cost-efficient barrier design, OPTIMA computes a factor for each barrier section at each of its heights. This factor, called the Effectiveness/Cost (E/C) ratio, is based on the "effectiveness" of the barrier divided by its cost.

3.2.1 Barrier effectiveness

What constitutes barrier "effectiveness"? Three elements contribute to the "effectiveness" of the barrier, as OPTIMA defines it. Those elements are sound energy going over the barrier, number of people affected, and DNL. Clearly, each of these elements must be associated with a receiver. The algoithm that computes effectiveness starts with the first barrier at the first (ground) height (Z_0, ground elevation). It then loks at the sound energy going to the first receiver. This energy is then weighted by the number of people and DNL for that receiver. The program then sums these weighted energies over all receivers to determine a single "effectiveness" for the first barrier section. Therefore the effectiveness of each barrier is based on the (reduction in) total <u>community</u> sound energy.

Consequently, receivers exposed to the highest noise levels (or sound energy) are most influential in determining the "effectiveness" of the barriers. Similarity, since population and DNL are also figured into the "effectiveness," receivers representing a large number of people or having a low DNL (implying high sensitivity of the receiver) will influence the E/C ratios more than receivers with small population or higher DNL. A discussion of the mathematical basis of the E/C ratios calculation is presented in Appendix A.

3.2.2 Cost

The cost portion of the effectiveness/cost ratio is simply based on the total material and construction cost of the barrier section at a specific height [7]. The barrier height (above ground or Z_0) and length information come from the "acoustics" input, the material selection comes from the user input, and the cost per linear foot is in the OPTIMA code.

Figure 16 shows the data block at the beginning of the OPTIMA program code. This data block includes all of the cost and material data used for calculation of the F/C ratios and later for total barrier cost. The barrier heights to which the costs apply are given in the first identified array. The second data block, identified as CPLF (Cost Per Linear Foot), gives the cost per linear foot at each of the heights listed in the previous array. Each line of costs corresponds to a material type, the name of which is specified below in the BTNME (Barrier Type Name) data block. If the user wishes to specify his own barrier material. (e.g., a wall-on-berm) and associated costs, the most straight-forward approach is to substitute the new costs and name for one of the types already listed. This change, of course, requires the user to recompile the fortran version of OPTIMA. Assistance may be obtained from the Demonstration Projects Program.

3.2.3 Barrier height above ground

Along with the E/C ratio for each barrier section-height, the height above ground (above Z_0 from STAMINA input) is also computed and tabulated for reference.

3.2.4 E/C and barrier height matrix

The F/C ratio and barrier height for each barrier section at each height are printed by OPTIMA at the user's terminal. An example (based on the example problem) of this E/C ratio and barrier height matrix is shown in Figure 17. Note that the barrier sections are listed down and the heights are listed across. There is a barrier height index number for each barrier height and E/C ratio. An asterisk is used for the first barrier height because this is the ground height for the no-barrier case; therefore; there is no cost (for E/C ratio) or height to show in the matrix.

```
      BLOCK DATA
       DOUBLE PRECISION BTNME
      COMMON/BLK2/BH(8),CPLE(8,50),NBH
      COMMON/BLK3/BTNME(50),NTYPES
C
C VARIABLE NAME. DEFINITION
C BH(NBH)       . BARRIER HEIGHT TABLE USED FOR COMPUTING BARR COST/LN FT REAL
C CPLE(NBH,NTY). BARRIER COSTS PER LINEAR FT AS A FUNCTION OF HGHT,TYPE REAL
C NTYPES        . INDICATES BARRIER TYPE EX-STEEL,WOOD,CONCRETE,ETC)     INT
C NBH           . INDICATES NUMBER OF BARRIER HEIGHTS                    INT
C BTNME         . ALPHANUMERIC BARRIER TYPE TABLE                        REAL
C
      DATA NBH/8/
      DATA BH/
     1 1.0, 5.0, 10.0, 15.0, 20.0, 25.0, 30.0, 35.0/
      DATA CPLE/
     1 2.8, 7.8, 23.9, 69.5, 95.8, 142.1, 198.8, 238.1,
     2 5.6, 23.9, 52.6, 95.8, 111.8, 127.8, 183.7, 159.7,
     3 6.8, 28.7, 57.5, 102.2, 175.7, 249.2, 322.7, 396.2,
     4 9.8, 41.5, 81.5, 139.0, 183.7, 228.4, 273.0, 311.2,
     5 11.2, 52.6, 128.5, 208.3, 358.7, 505.0, 655.2, 805.5,
     6 360*0.0/
      DATA NTYPES/5/
      DATA BTNME/
     1 BHBRRR        ,
     2 BHMASONRY     ,
     3 BHWOOD        ,
     4 BHCONCRETE    ,
     5 BHSTEEL       ,
     6 85*'          ' /
      END
C     PROGRAM OPTIMA(INPUT,OUTPUT,TAPE5=INPUT,TAPE6=OUTPUT,
```

Barrier heightsfor which costs are applicable (ft)

Barrier construction cost per linear foot at heights given above for materials given below.

Material codes and names corresponding to costs per linear foot given above.

FIGURE 16. BARRIER COST DATA BLOCK

EFFECTIVENESS/COST RATIO AND BARRIER HEIGHT MATRICES
****

BARRIER SECTION NO	IDENT	EFFECTIVENESS/COST RATIO						CORRESPONDING BARRIER HEIGHTS(IN FT)					
HEIGHT INDEX		1	2	3	4	5	6	1	2	3	4	5	6
1	B1-STA90 *	19.	19.	18.	19.	19.		0.	6.	8.	10.	12.	14.
2	B2-STA99 *	19.	19.	19.	19.	18.		0.	6.	8.	10.	12.	14.
3	B3-ST106 *	12.	14.	16.	15.	15.		0.	6.	8.	10.	12.	14.
HEIGHT INDEX		1	2	3	4	5	6	1	2	3	4	5	6

FIGURE 17. BARRIER E/C RATIOS AND HEIGHT MATRIX

3.3 Choosing First Barrier Design

Since the user will be choosing one height for each barrier section as his "barrier design," he must have a basis in the E/C ratios for choosing specific heights.

3.3.1 Meaning of E/C ratios

The E/C ratios have been presented in the matrix as 10 log (E/C). The logarithm is used to collapse the large range of values E/C takes on and to make 10 log E/C act like decibels for the user's benefit. As with decibels, a difference of 3 in 10 log E/C means a factor of 2 difference in E/C, a difference in 10 means a factor of 10, and a difference in 20 means a factor of 100 difference in effectiveness/cost. (See Appendix A for details.)

A high E/C ratio means that the barrier section height has low effectiveness (reduction of sound energy for many people) at a low cost. A low E/C ratio means high effectiveness at a high cost.

3.3.2 Concept of a balanced design

When choosing the first barrier design, the user will achieve a "balanced" design if he chooses barrier heights that all have the same E/C ratios. The design can be considered balanced with respect to effectiveness and cost. A balanced design is the most effective design for the least cost; that is, no transfer of money from one barrier section to another will result in an increase in effectiveness.

A balanced design does not necessarily provide adequate protection or fall within reasonable height requirements, however. The user must us the E/C ratios as a <u>guide</u> toward a reasonable, cost-effective barrier design.

If a user chooses a design with relatively high E/C ratios, a lower barrier with lower costs will be designed. If he chooses lower numbers, the result will be a higher barrier at a higher cost.

3.3.3 Matrix of barrier heights

The user may wish to refer to the matrix of barrier heights adjacent to the E/C ratio matrix for quidance in designing a barrier. He may wish to contour the barrier to conform to esthetic requirements. Or, he may have a height limit that cannot be exceeded for certain barrier sections. He can then realize the "cost" of his limitations by referring to the E/C ratio associated with the chosen barrier heights.

3.4 Results Computation

3.4.1 Barrier height selection

After OPTIMA prints the E/C and height matrix, it instructs the user to enter a one-line description of the test about to be run. After this is entered, the program asks the user to enter the barrier height index for each barrier section, in order. The user then refers to the height index (shown at the top and bottom of the matrix) for each barrier section-height he has chosen, and enters the indices all on one line, in a list-directed format. (See top of Figure 18)

3.4.2 Leq (h) computation

After the barrier heights are selected, OPTIMA then echoes the list of height indices, prints a list of the corresponding heights, and calculates and prints the resulting Leq (h) noise level at each receiver. This calculation is based on the matrix of sound energy values from the STAMINA acoustics file. Also included is the Leg (h) for the "no barrier" or Z (Ø) condition for each receiver. Figure 18 shows an example of this listing.

3.4.3 Cost Computation

After listing the noise levels, OPTIMA lists the cost for the complete barrier system, by material. The cost number are based on a sum of the costs for each material and for each barrier section. The total cost is, of course, based on the specific barrier heights just chosen. Figure 18 also shows the cost output.

```
        BARRIER HEIGHT SELECTION FOR NOISE LEVEL AND COST CALCULATION
        ***********************************************************************

ENTER THIS CALCULATIONS DESCRIPTION FOR OUTPUT FILE (80 CHARS)
?
MAXIMUM HEIGHT

        ENTER BARRIER HEIGHT INDEX FOR EACH
        BARRIER SECTION.  (LIST DIRECTED)
?
6   6   6


EXAMPLE OF STAMINA 2.0 DATA INPUT

MAXIMUM HEIGHT

        BARRIER HEIGHT INDEX FOR EACH BARRIER SECTION
        6   6   6
        CORRESPONDING BARRIER HEIGHTS FOR EACH SECTION
        14.   14.  14.


        RESULTS
        ********

REC   REC ID        LEQ    LEQ (Z) (0) )  IL
    1   R1          63.9   67.7           3.9
    2   R2          60.4   68.0           7.6
    3   R3          63.3   67.3           4.1

BARRIER TYPE        COST
FH-BERM                  0.
FH-MASON             61600.
FH-WOOD              65400.
FH-CONC              31800.
FH-STEEL                 0.
************************

    BARRIER COST = $  158800.

DO YOU WANT TO VIEW THE SOUND LEVEL CONTRIBUTION AT ANY OR ALL
RECEIVERS (Y OR N)
?
Y
```

FIGURE 18. BARRIER HEIGHT SELECTION AND RESULTS

3.4.4 Barrier Segment Sound Level Contributions

To view the sound levels that reach a receiver from all the barrier segments, the user answers "Y" to the question.

"DO YOU WANT TO VIEW THE SECOND LEVEL CONTRIBUTIONS AT ANY RECIEVER?"

as shown in Figure 18. OPTIMA will then ask whether you wish to see the sound level contributions at every receiver or a particular one. To view all receivers, the user enters "0". To view a particular receiver, the user enters the receiver number found on the left most side of the results table. Figure 18A shows an example of the sound level contributions at a receiver.

3.4.5 Generation of a profile plot of the results

To assist in the analysis of OPTIMA results, a profile view showing the roads, receivers, and selected barrier can be generated. The user responds with a "Y" or "N" to the question,

"DO YOU WANT TO GENERATE A PROFILE PLOT OF THESE RESULTS?"

as shown in Figure 20. Please refer to Section 5.4 for a detailed discussion of the OPTIMA graphics.

3.5 Interaction and Looping

3.5.1 First loop: new barrier design (new set of segment heights)

Refer to the BCR Procedure Flow Diagram (Fig. 19)

where Loop is 3 " is shown.

To execute this loop, the user has only to answer the question posed by OPTIMA, shown in Fig. 18. After printing costs for the first barrier design, OPTIMA asks the user if he wants to try another design. If the user answers "yes" (Y), the program asks for another test description and, after the user responds, a new list of barrier section, as before, and OPTIMA repeats its calculation and output. If the user answers "no" (N) to the question, OPTIMA stops and sends all the information shown at the terminal to a file.

```
ENTER A RECIEVER NUMBER (0 FOR ALL RECIEVERS)
?
2
        RECEIVER 2 – LEQ (H)
        R2              60.4

BARRIER SEGMENT SOUND LEVEL CONTRIBUTIONS

BARRIER 1
SEGMENT BEGINNING AT

B1 – STA90          B2-STA99     B3-ST106
        54.8        58.7         48.0

SOUND NOT PASSING OVER ANY BARRIER
0.0

DO YOU WANT TO VIEW THE SOUND LEVEL CONTRIBUTION OF ANOTHER
RECEIVER (Y OR N)
?
N
```

FIGURE 18A. BARRIER SEGMENT SOUND LEVEL CONTRIBUTIONS

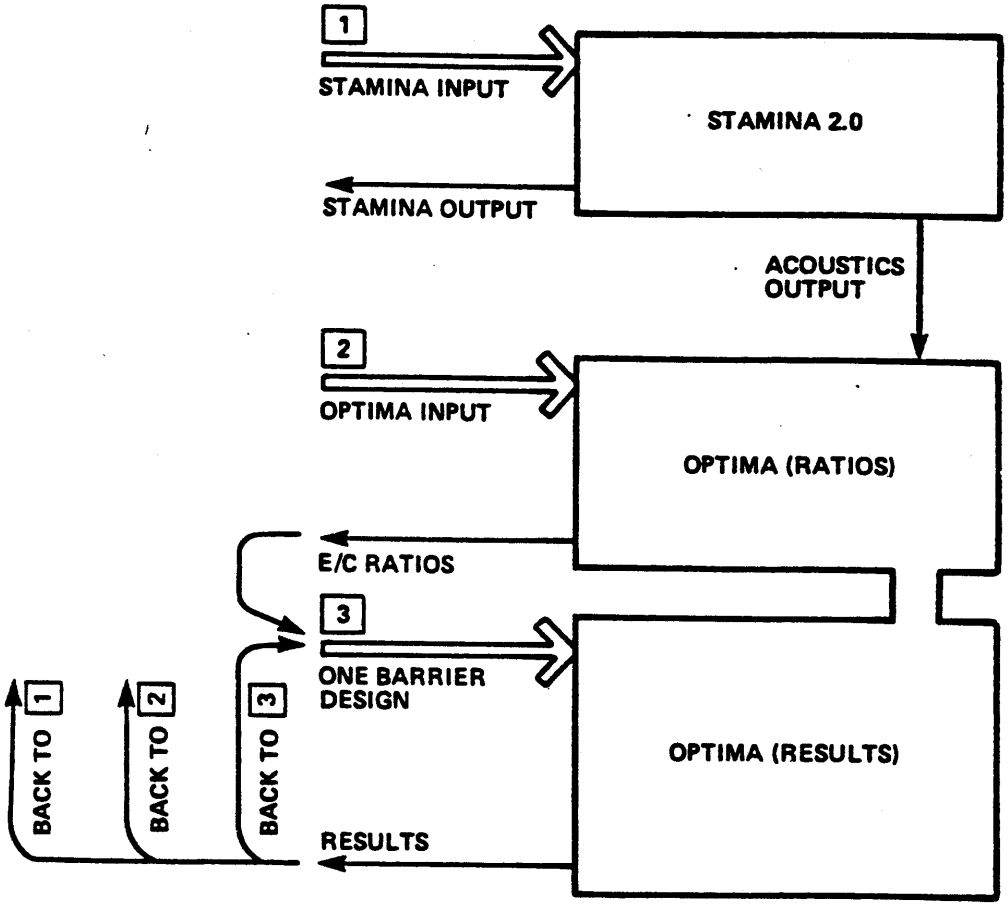

FIGURE 19. BCR PROCEDURE FLOW DIAGRAM

```
  DO YOU WANT TO SELECT ANOTHER PATH OF HEIGHT INDICES
 (Y OR N)
?
Y

  DO YOU WANT TO VIEW THE E/C MATRIX AGAIN
 (Y OR N)
?
N


     BARRIER HEIGHT SELECTION FOR NOISE LEVEL AND COST CALCULATION
     *************************************************************

  ENTER THIS CALCULATIONS DESCRIPTION FOR OUTPUT FILE (80 CHARS)
 ?
EFFECTIVENESS COST RATIO EQUALS 19

  ENTER BARRIER HEIGHT INDEX FOR EACH
  BARRIER SECTION.  (LIST DIRECTED)
?
6 4 1



EXAMPLE OF STAMINA 2.0 DATA INPUT

EFFECTIVENESS COST RATIO EQUALS 19


 BARRIER HEIGHT INDEX FOR EACH BARRIER SECTION
   6  4  1
 CORRESPONDING BARRIER HEIGHTS FOR EACH SECTION
 14.10. 0.


     R E S U L T S
     *************

 REC     REC ID        LEQ       LEQ(Z(0))       IL
   1     R1            64.0       67.7          3.8
   2     R2            62.5       68.0          5.5
   3     R3            66.0       67.3          1.4


 BARRIER TYPE          COST
 FH-BERM                   0.
 FH-MASON              61600.
 FH-WOOD               40300.
 FH-CONC                   0.
 FH-STEEL                  0.
***************************

  BARRIER COST = $   101900.

 DO YOU WANT TO VIEW THE SOUND LEVEL CONTRIBUTION AT ANY OR ALL RECEIVERS
 (Y OR N)
?
N
 DO YOU WANT TO GENERATE A PROFILE PLOT OF THIS DATA
 (Y OR N)
?
N

  DO YOU WANT TO SELECT ANOTHER PATH OF HEIGHT INDICES
 (Y OR N)
?
N

 END OF ALL CASES
```

FIGURE 20. LOOPING BACK TO OPTIMA FOR A NEW DESIGN

The reasons for looping back to [3] can be many, and may include:

- a receiver is still above the Design Noise Level (DNL);
- the total cost is too high;
- there is more noise reduction than necessary.

OPTIMA should be run at the baseline (Z) and maximum heights to check acoustics and costs for the barriers. These costs can be compared with other barrier designs for effectiveness and cost.

3.5.2 Second loop: rerun OPTIMA from beginning

Refer to Figure 19 where "Back to [2] " is shown.

To execute this loop, the user must stop OPTIMA, and start it again.

The reasons for rerunning OPTIMA may include:

- the user wishes to change barrier materials for some or all barrier sections (OPTIMA input);
- The user wishes to change receiver population weightings or DNL's to influence the E/C ratio calculation;

3.5.3 Third loop: rerun STAMINA

Refer to the Flow Diagram where "Back to [1] " is shown.

To execute this loop, the user must rerun the STAMINA 2.0 program.

The reasons for rerunning STAMINA include:

- the barrier heights run the first time do not cover the range the user now wishes to examine;

- the user wishes to add additional barrier sections;
- the user wishes to try an alternative lateral barrier position, such as a "wrap-around" barrier instead of lengthening the barrier along the roadway;
- more receivers are desired;
- the user wishes to change the shielding factors or alpha factors for some roadway-receiver combinations.

3.6 OPTIMA Output File

OPTIMA always creates a file that contains all of the calculated information from each run. This is called the output file (Figure 20A). Although the user has already seen all of the information that is contained in the output file on his terminal, the file can be useful for future references.

If OPTIMA is run from a video display terminal rather than a printing terminal, the output file provides the user with the only permanent record of the OPTIMA run. By listing this file on a line printer, the user can obtain a hard copy of the OPTIMA run.

3.7 Guidelines for OPTIMA

3.7.1 Population weighting

The user supplies a population weighting value for each receiver as input to OPTIMA. This value is used to multiply the sound energy values for that receiver in order to weight the E/C ratios with respect to the number of people affected by the barrier. If the user specifies a zero population weighting value for a receiver, the sound energy values for that receiver are given <u>no</u> significance in the calculation of the E/C ratios. Therefore, the user significantly influences the E/C ratios through his choice of population weighting.

If the user wishes to have a meaningfully balanced noise barrier design, he should take care to choose meaningful population weightings. The population weightings have meaning only with respect to each other and how they affect the E/C ratios. For example, if a user has placed one

```
                P R O G R A M   O P T I M A
                ***************************

          BARRIER OPTIMIZATION PROGRAM USING
          PARTIAL SOUND ENERGIES COMPUTED BY THE
          STAMINA/BCR PROGRAM
              FHWA VERSION 3 -- MARCH 1983


     PROBLEM TITLE
     *************

EXAMPLE OF STAMINA 2.0 DATA INPUT


     SUMMARY OF BARRIER AND RECEIVER DATA
     ************************************

 BARR ELE      ID         TYPE
        1      B1-STA90   FH-MASON
        2      B2-STA99   FH-WOOD
        3      B3-ST106   FH-CONC

  REC NO.      REC ID       PEOPLE      DNL
        1      R1               1.      67.
        2      R2               1.      67.
        3      R3               1.      67.

                EFFECTIVENESS/COST RATIO AND BARRIER HEIGHT MATRICES
                ****************************************************

BARRIER SECTION        EFFECTIVENESS/COST                CORRESPONDING
   NO   IDENT                  RATIO                 BARRIER HEIGHTS(IN FT)

 HEIGHT INDEX    1    2    3    4    5    6            1  2  3  4  5  6


    1  B1-STA90 *  19.  19.  18.  19.  19.             0. 6. 8.10.12.14.
    2  B2-STA99 *  19.  19.  19.  19.  18.             0. 6. 8.10.12.14.
    3  B3-ST106 *  12.  14.  16.  15.  15.             0. 6. 8.10.12.14.

 HEIGHT INDEX    1    2    3    4    5    6            1  2  3  4  5  6
```

FIGURE 20A. OPTIMA OUTPUT FILE

EXAMPLE OF STAMINA 2.0 DATA INPUT

STAMINA BARRIER

BARRIER HEIGHT INDEX FOR EACH BARRIER SECTION
4 4 4
CORRESPONDING BARRIER HEIGHTS FOR EACH SECTION 10.10.10

RESULTS
****

REC	REC ID	LEQ	LEQ (Z(0))	IL
1	R1	66.1	67.1	1.6
2	R2	62.8	68.0	5.2
3	R3	65.6	67.3	1.7

BARRIER TYPE	COST
FH-BERM	0.
FH-MASON	37100.
FH-WOOD	40300.
FH-CONC	20300.
FH-STEEL	0.

****

BARRIER COST = $ 97700.

FIGURE 20A. con't

EXAMPLE OF STAMINA 2.0 DATA INPUT

EFFECTIVENESS COSTS RATIO EQUALS 19

BARRIER HEIGHT INDEX FOR EACH BARRIER SECTION
6 4 1
CORRESPONDING BARRIER HEIGHTS FOR EACH SECTION
14. 10. 0.

RESULTS
****

REC	REC ID	LEQ	LEQ(Z(0))	IL
1	R1	64.0	67.7	3.8
2	R2	62.5	68.0	5.5
3	R3	66.0	67.3	1.4

BARRIER TYPE	COST
FH-BERM	0.
FH-MASON	61600.
FH-WOOD	40300.
FH-CONC	0.
FH-STEEL	0.

****

BARRIER COST = $ 101900.

FIGURE 20A. con't

receiver at each dwelling unit, and he knows there are 2.5 people per dwelling unit in the study area, it makes no difference to the barrier design process whether he assigns 1, 2.5, or 100 people to each receiver, since each receiver receives the same weight. The only difference will be size of each E/C ratio; the differences among them will remain constant.

OPTIMA can be used to examine noise barrier options for a single receiver, if desired. The user simply assigns zero population weighting to all other receivers. The resulting E/C ratios will apply only to the receiver of interest, and the critical barrier sections will appear as the ones with the highest E/C ratios. This approach can be helpful if a single receiver is a problem, and with the normal population weightings, the user cannot easily identify which barrier sections are the most important for the problem receiver.

3.7.2 Comparing E/C ratios

The user is cautioned against comparing E/C ratios between different OPTIMA runs. Usually, only E/C ratios in the same matrix should be compared, unless OPTIMA input is the same in a subsequent run. The E/C ratios are designed to be used to balance a barrier design for cost-effectiveness in a single OPTIMA run. There is no significance to the actual value of effectiveness/cost for a barrier section, except in comparison to the E/C ratios for barrier sections in the same matrix.

The barrier sections with the same E/C ratio represent a balanced design. In the example shown in Figure 17, section "B3-ST106" does not have E/C ratios as high as the other sections. This indicates that the section provides little effectiveness at a high cost, as compared to the other sections. In these cases, the barrier section should not be built (the user enters '1' for section 3) based on acoustical effectiveness. Barrier sections with E/C ratios close to the numerical value to the selected balanced design ratio, but not the exact number, may be substituted to get the balanced design.

The user should use the E/C ratios only as a <u>guide</u> to designing a cost-efficient barrier system. The E/C ratios will not always point the way to a barrier design that is acceptable to all involved parties (i.e., planning, design, construction, landscape architects, and citizens). Many times, in order to meet predetermined noise abatement criteria, a user will have to choose barrier sections with E/C ratios that are not similar to the others he has chosen.

3.7.3 Fine tuning barrier design

By looping through the barrier design section for OPTIMA several times, the user can usually home-in on the results he wants and end up with a minimum cost barrier. A very helpful aid to this process is a plan map of the study area with the barrier sections and receiver locations clearly identified. If this map is place near the computer terminal the barrier design process is aided significantly, because the important relationship between barrier sections and receivers becomes more obvious. It also helps to make several copies of the E/C matrix, so that each test run's values can be circled on a separate copy.

Several examples of the use of STAMINA 2.0 and OPTIMA are presented in Section 4.