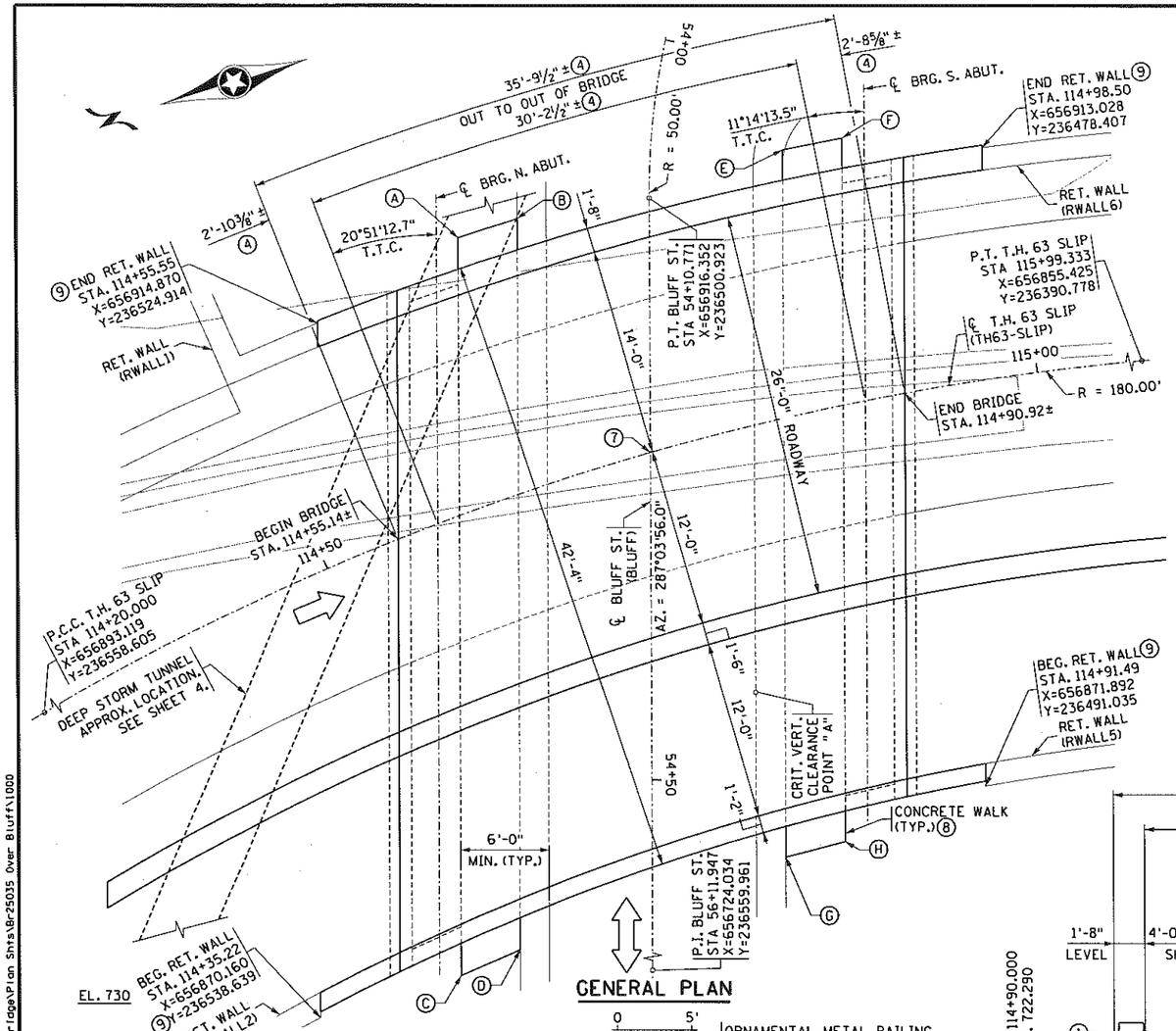

GENERAL PLAN

0 5'

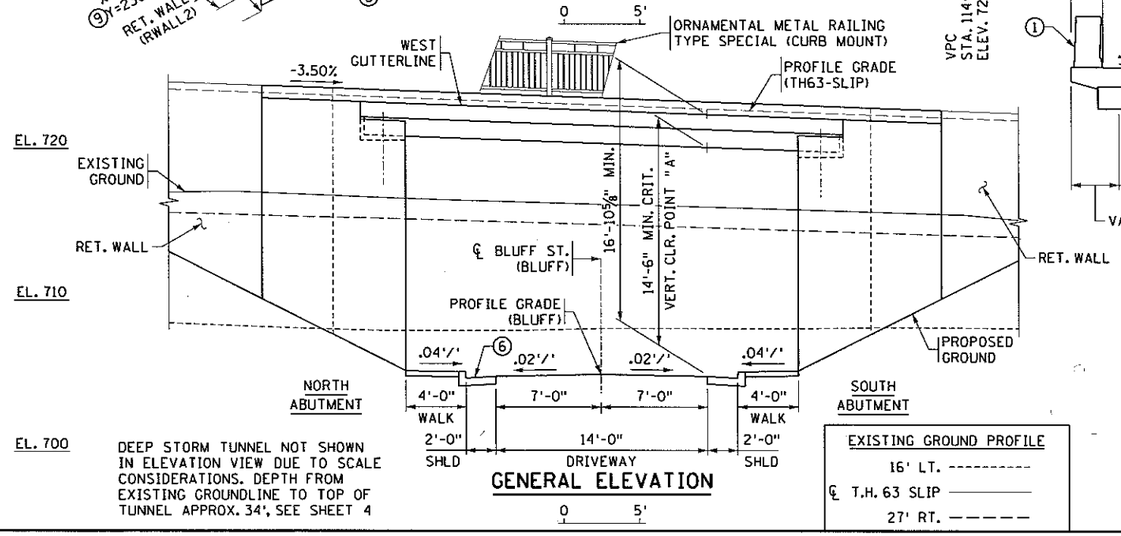

DEEP STORM TUNNEL NOT SHOWN IN ELEVATION VIEW DUE TO SCALE CONSIDERATIONS. DEPTH FROM EXISTING GROUNDLINE TO TOP OF TUNNEL APPROX. 34', SEE SHEET 4

GENERAL ELEVATION

0 5'

EXISTING GROUND PROFILE	
16' LT.	----------
℄ T.H. 63 SLIP	————
27' RT.	— — — —

NOTES:

RETAINING WALL AND WINGWALL CONNECTION DETAILS TO BE COORDINATED BETWEEN FINAL BRIDGE DESIGN AND ROAD DESIGN UNITS.

SEE BORING SHEET FOR INPLACE UTILITIES.

SUBSTRUCTURES SET PARALLEL AT AZ. 287°03'56.0"

BRIDGE APPROACH PANEL LAYOUT STANDARDS 5-297.222 AND 5-297.223 SHALL APPLY.

BRIDGE APPROACH TREATMENT STANDARD 5-297.233 APPLIES.

BLUFF STREET TRANSITIONS FROM A CITY STREET TO A PRIVATE DRIVE EAST OF BRIDGE 25035.

TRAFFIC TO BE DETOURED DURING CONSTRUCTION.

VISUAL QUALITY MANUAL DEVELOPED FOR PROJECT.

METAL RAILING TO MEET REQUIREMENTS FOR PROTECTIVE SCREENING PER LRFD BRIDGE DESIGN MANUAL 13.2.5.

DECK OVERHANG EXCEEDS MNDOT BRIDGE DESIGN MANUAL LIMIT OF 2'-8" MAX. INVESTIGATE DECK STRENGTH IN FINAL DESIGN.

THE SUBSURFACE UTILITY INFORMATION IN THIS PLAN IS UTILITY QUALITY LEVEL D. THIS UTILITY QUALITY LEVEL WAS DETERMINED ACCORDING TO THE GUIDELINES OF CI/ASCE 38-02, ENTITLED "STANDARD GUIDELINES FOR THE COLLECTION AND DEPICTION OF EXISTING SUBSURFACE UTILITY DATA".

Ⓐ EL. 705.2±
Ⓑ EL. 705.0±
Ⓒ EL. 706.2±
Ⓓ EL. 706.0±
Ⓔ EL. 705.0±
Ⓕ EL. 705.2±
Ⓖ EL. 705.8±
Ⓗ EL. 705.9±

① CONCRETE BARRIER (TYPE P-4, TL-4) 2'-8" MIN. HEIGHT ABOVE SLAB. SEE AESTHETICS.

② ORNAMENTAL METAL RAILING TYPE SPECIAL (CURB MOUNT) SEE AESTHETICS.

③ 9" MIN. SLAB

④ MEASURED ALONG ℄ TH63-SLIP

⑤ NUMBER AND SPACING OF BEAMS IS APPROXIMATE AND WILL BE SET DURING FINAL DESIGN.

⑥ B424 C & G (TYP.) CONFIRM DURING FINAL DESIGN.

⑦ ℄ T.H. 63 SLIP (TH63-SLIP)
P.O.C. STA. 114+73.287 =
℄ BLUFF ST. (BLUFF)
P.O.T. STA. 54+27.919
X=656899.959, Y=236505.955
∢ =105°59'14.4"

⑧ CONCRETE WALK REQUIRED AT EACH ABUTMENT UNDER BRIDGE AND EXTENDING 2'-0" MINIMUM BEYOND EACH EDGE OF DECK.

⑨ RETAINING WALL LOCATIONS ARE GIVEN AT 1'-6" OUTSIDE GUTTERLINE. ACTUAL WALL ALIGNMENT LOCATION TO BE DETERMINED IN FINAL DESIGN.

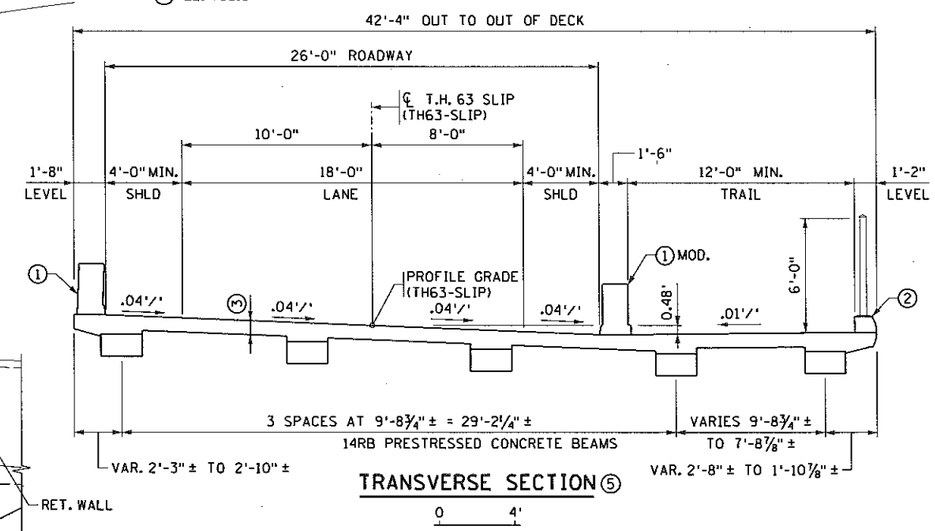

TRANSVERSE SECTION ⑤

0 4'

DEPTH OF STRUCTURE:

2'-2" GUTTER TO LOW BRIDGE
14RB P.C.B. 5± BEAM LINES

ROAD DESIGN UNIT:		
CHAD HANSON	507-286-7637	
BRIDGE DESIGN UNIT:		
BEN JILK	651-366-4585	

DESIGN DATA

2014 AND CURRENT INTERIM AASHTO LRFD BRIDGE DESIGN SPECIFICATIONS

LOAD AND RESISTANCE FACTOR DESIGN METHOD
DESIGN LOADING HL-93 LIVE LOAD

DEAD LOAD INCLUDES 20 psf ALLOWANCE FOR FUTURE WEARING COURSE MODIFICATIONS.

MATERIAL DESIGN PROPERTIES:
REINFORCED CONCRETE:
f'c = 4 ksi n = 8
fy = 60 ksi REINFORCEMENT

PRESTRESSED CONCRETE:
f'c = 9 ksi n = 1
fpu = 270 ksi LOW RELAXATION STRANDS
0.75 fpu FOR INITIAL PRESTRESS

2042 PROJECTED TRAFFIC VOLUMES:

ROAD OVER		ROAD UNDER
3,100	A.A.D.T.	N/A
30	H.C.A.D.T.	N/A

DESIGN SPEED: 30 MPH (OVER), 10 MPH (UNDER)
APPROXIMATE DECK AREA 1490 SF

LIST OF SHEETS

NO.	TITLE
1	GENERAL PLAN AND ELEVATION
2	BRIDGE SURVEY
3	ALIGNMENT TABULATIONS
4	BORINGS
5-6	AESTHETIC DETAILS

PROPOSED TYPE OF STRUCTURE

DECK:
TYPE 14RB PRESTRESSED CONCRETE BEAMS
SIMPLE SPAN
ALL BARS EPOXY COATED
FULL DEPTH HIGH PERFORMANCE CONCRETE

SUBSTRUCTURE:
PARAPET TYPE ABUTMENTS SUPPORTED ON SPREAD FOOTINGS

AESTHETICS:
LEVEL B

HDR

MINNESOTA DEPARTMENT OF TRANSPORTATION

PRELIMINARY BRIDGE PLANS
BRIDGE NO. 25035

T.H. 63 SLIP RAMP OVER BLUFF STREET
0.1 MILES SOUTHWEST OF JCT
T.H. 63 AND T.H. 61

SPAN ID. NO. 501

SEC. 29 TWP. 113 N. R. 14 W.

CITY OF RED WING GOODHUE COUNTY, MN

APPROVED: Beverly A. Stencher 11/23/15
STATE BRIDGE ENGINEER DATE

DES: DJR	DR: DJR	25035	
CHK: JZB	CHK: JZB		

drscha1
2015-11-16 PM
11/4/2015
c:\pwworking\oma\d102587\00000000\177092.rb1
pw:\\PWAPPDMA01\NorthCentral\Omaha\Documents\007569\00000000\177092\13.00.CAD\Bridge\Plan Shts\Br25035 Over Bluff\1000

CONTRACTED PROFILE

SCALE : 0 50' 100' HORIZONTAL 0 5' 10' VERTICAL

T.H. 63 SLIP PROFILE (TH63-SLIP)

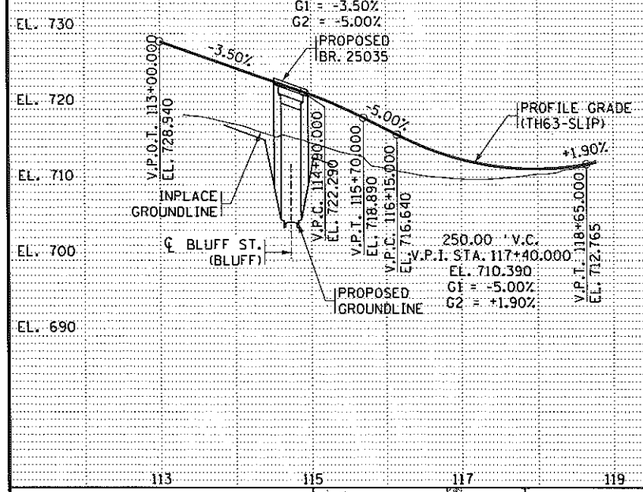

PROFILES

SCALES AS SHOWN

BLUFF ST PROFILE (BLUFF)

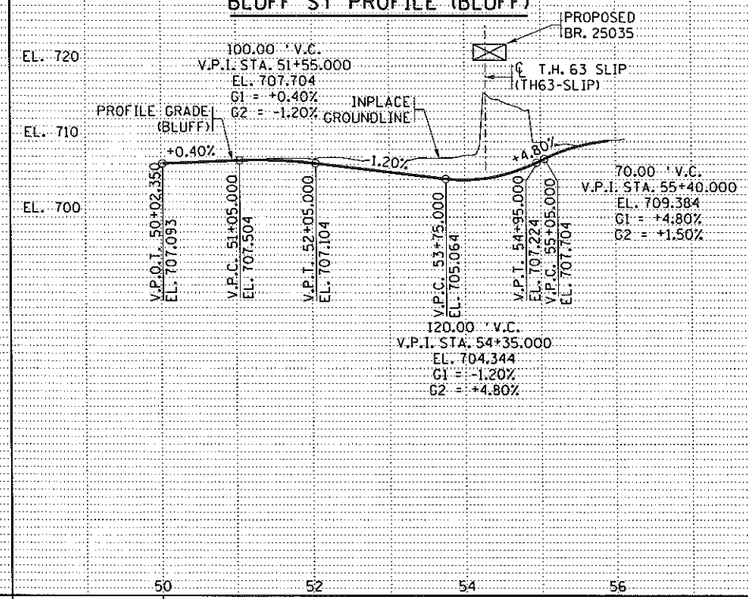

LOCATION ENGINEER'S OBSERVATIONS AT BRIDGE SITE

1. SPECIAL FEATURES: WATERFALLS, DAMS, FLOODS, ICE, DEBRIS, SLIDING BANKS, RECREATIONAL BOATING.
2. OTHER BRIDGES OR CULVERTS OVER THE SAME STREAM (PARTICULARLY STRUCTURES WHICH CARRY HIGH WATER WITHOUT OVERFLOW OF ROADWAY): GIVEN LOCATION, TYPE, LENGTH, HEIGHT ABOVE HIGH WATER, CROSS-SECTIONAL AREA ETC.
3. APPARENT HIGHWATER ELEVATION OBTAINED FROM:
4. OTHER DATA: APPROX. VELOCITY OF WATER AT TIME OF SURVEY.

HYDRAULIC ENGINEERS RECOMMENDATION

DATE: XX-XX-XX

STREAM OR DITCH DESIGNATION: XXX
DRAINAGE AREA: XXX SQ. MI.
MAX. FLOOD ON RECORD: XXX C.F.S. (XX-XX-XX)
MAXIMUM OBSERVED HIGHWATER ELEVATION: XXX.X FT.
DESIGN FLOOD (XX YR. FREQ.): XXX C.F.S.
HEADWATER ELEVATION: XXX.X FT.
DESIGN MEAN VELOCITY THROUGH STRUCTURE: X.X F.P.S.
TOTAL STAGE INCREASE: XX.X FT.
LOW MEMBER AT OR ABOVE ELEVATION: XXX.X FT.
WATERWAY AREA REQUIRED BELOW ELEV. XXX.X = XXX SQ. FT. AT RIGHT ANGLES TO CHANNEL
BASIC FLOOD (100 YR. FREQ.): XXXX C.F.S.
HEADWATER ELEVATION: XXX.X FT.
TOTAL STAGE INCREASE: X.X FT.
MEAN VELOCITY THROUGH STRUCTURE: X.X F.P.S.
FLOWLINE ELEVATION: XXX.X FT. SKEW ANGLE: XX°
ESTIMATED PRELIMINARY TOTAL SCOUR AT PIER EL. XXX.X (500 OR OT YR. FREQ.)

SCOUR CONFIRMATION RECOMMENDATION

DATE: XX-XX-XX

TOTAL SCOUR AT PIER EL. XXX.XX (500 OR OT YR. FREQ.)
SCOUR CODE: OBTAIN FROM HYDRAULIC ENGINEER

BRIDGE SURVEY SHEETS MADE FROM :

FILES:
JOB112.GPK, 119112_TP1.DGN, 119112_RW1.DGN, 119112_PR1.DGN, 119112_GM1.DGN, 119112_AL1.DGN, 119112.TIN

BENCH MARK ELEVATION 678.588 (N.A.V.D 88 ADJ.) GSID STATION #93692, MNDOT NAME: "RW 4 2010", IN RED WING.
X = 653,443.923, Y = 235,968.901

PLAT

SCALE: 0 50' 100'

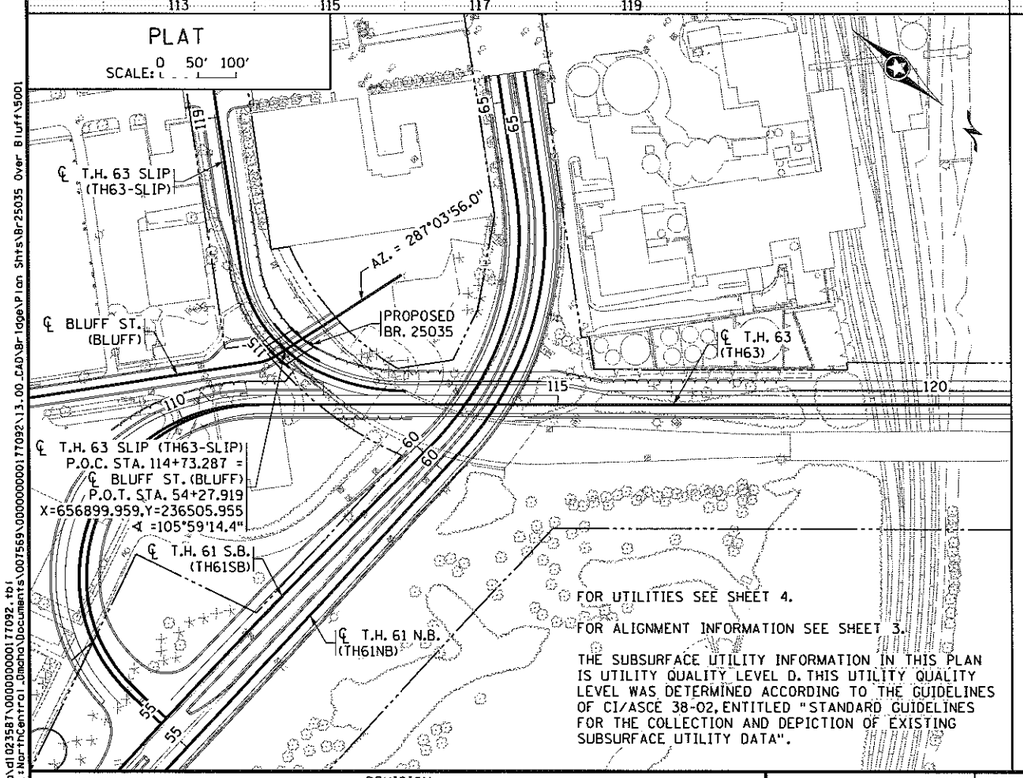

FOR UTILITIES SEE SHEET 4.

FOR ALIGNMENT INFORMATION SEE SHEET 3.

THE SUBSURFACE UTILITY INFORMATION IN THIS PLAN IS UTILITY QUALITY LEVEL D. THIS UTILITY QUALITY LEVEL WAS DETERMINED ACCORDING TO THE GUIDELINES OF CI/ASCE 38-02, ENTITLED "STANDARD GUIDELINES FOR THE COLLECTION AND DEPICTION OF EXISTING SUBSURFACE UTILITY DATA".

TYPICAL SECTIONS & PERTINENT DATA

SCALES AS SHOWN

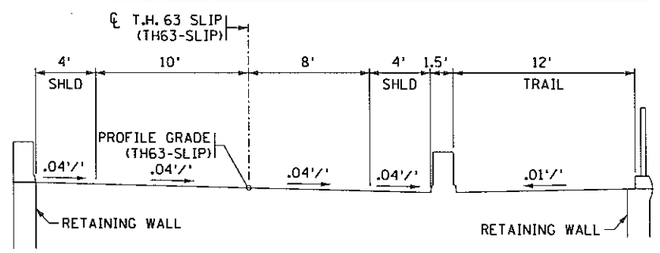

PROPOSED TYPICAL SECTION T.H. 63 SLIP

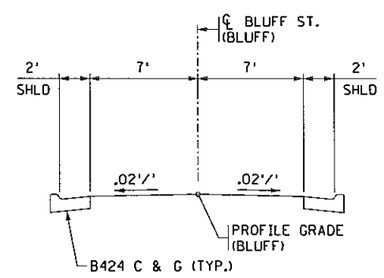

PROPOSED TYPICAL SECTION BLUFF ST.

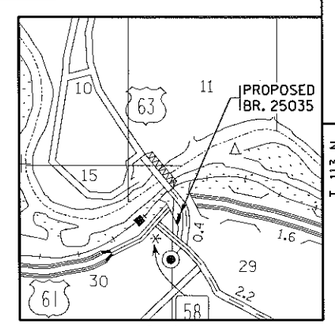

INDEX MAP
(FOUR SECTIONS)

MINNESOTA
DEPARTMENT OF TRANSPORTATION

BRIDGE SURVEY

T.H. 63 SLIP RAMP OVER BLUFF STREET

0.1 MILES S.W. OF JCT T.H. 63 & T.H. 61

SEC. 29 TWP. 113 N. R. 14 W.

CITY OF RED WING GOODHUE COUNTY, MN

REVISION					
NO.	DATE	DESCRIPTION	DR.	CHK.	APP'D.

HDR

TITLE: BRIDGE SURVEY

DES: DJR	DR: DJR	APPROVED:
CHK: JZB	CHK: JZB	

STATE PROJECT NO. 2515-21

SHEET NO. 2 OF 6 SHEETS

BRIDGE NO. 25035

c:\pwworking\oma\d1023587\00000000017092.tb1
pw:\\PWAPPOMA001.hdrinc.com:Documents\007569\00000000017092\13.00_CAD\Bridge\Plan Shts\Br25035 Over Bluff\5001
drochel
2015/06 PM
11/4/2015

DENOTES ALIGNMENT USED IN PLAN
DENOTES ALIGNMENT GEOPAK NAME

ALIGNMENT TABULATION - (TH63) T.H. 63

POINT NUMBER	POINT	STATION	CURVE DATA					COORDINATES		AZIMUTH
			DELTA	DEGREE	RADIUS	TANGENT	LENGTH			
			SPIRAL CURVE DATA							
			ANGLE (Os)	DEGREE	ST	LT	LS	X	Y	
1010	PI	109+64.185	87° 48' 24.1" RT	24° 54' 40.4"	230.000'	221.360'	352.479'	657,126.773	236,351.229	PI
	CC							657,158.244	236,668.892	
	PT	110+95.304						656,983.191	236,519.706	319° 33' 40.4"
	PC	134+64.083						655,446.718	238,322.583	319° 33' 40.4"
1015	PI	135+71.993	4° 18' 50.5" RT	1° 59' 59.5"	2,865.000'	107.910'	215.717'	655,376.724	238,404.713	PI

ALIGNMENT TABULATION - (TH61NB) T.H. 61 N.B.

POINT NUMBER	POINT	STATION	CURVE DATA					COORDINATES		AZIMUTH
			DELTA	DEGREE	RADIUS	TANGENT	LENGTH			
			SPIRAL CURVE DATA							
			ANGLE (Os)	DEGREE	ST	LT	LS	X	Y	
1100	POT	42+00.000						658,683.434	236,686.257	
	PC	60+30.101						656,855.281	236,770.676	272° 38' 37.9"
1105	PI	62+33.571	51° 16' 15.8" LT	13° 30' 47.4"	424.000'	203.470'	379.416'	656,652.028	236,780.061	PI

ALIGNMENT TABULATION - (TH61SB) T.H. 61 S.B.

POINT NUMBER	POINT	STATION	CURVE DATA					COORDINATES		AZIMUTH
			DELTA	DEGREE	RADIUS	TANGENT	LENGTH			
			SPIRAL CURVE DATA							
			ANGLE (Os)	DEGREE	ST	LT	LS	X	Y	
1165	PI	57+19.841	2° 16' 08.3" RT	0° 45' 00.2"	7,639.000'	151.276'	302.512'	657,163.416	236,710.398	PI
	CC							657,666.901	244,334.288	
	PT	58+71.077						657,012.695	236,723.353	274° 54' 46.2"
	PC	60+15.179						656,869.123	236,735.694	274° 54' 46.2"
1170	PI	62+11.926	53° 32' 24.1" LT	14° 41' 28.4"	390.000'	196.747'	364.435'	656,673.098	236,752.544	PI

ALIGNMENT TABULATION - (BYPASS) BYPASS

POINT NUMBER	POINT	STATION	CURVE DATA					COORDINATES		AZIMUTH
			DELTA	DEGREE	RADIUS	TANGENT	LENGTH			
			SPIRAL CURVE DATA							
			ANGLE (Os)	DEGREE	ST	LT	LS	X	Y	
	PC	40+00.000						657,163.536	236,438.953	268° 40' 53.38"
BYPASS-1	PI	40+05.799	2° 53' 18.34" RT	24° 54' 40.35"	230.000'	5.799'	11.595'	657,157.739	236,438.820	PI
	CC							657,158.244	236,668.892	
	PCC	40+11.595						657,151.943	236,438.979	271° 34' 11.72"
	PCC	40+11.595						657,151.943	236,438.979	271° 34' 11.72"
BYPASS-2	PI	41+49.361	67° 48' 16.85" RT	27° 56' 56.98"	205.000'	137.766'	242.600'	657,014.228	236,442.753	PI
	CC							657,157.559	236,643.902	
	PT	42+54.195						656,965.699	236,571.689	339° 22' 28.57"
	PC	44+36.933						656,901.328	236,742.714	339° 22' 28.57"
BYPASS-3	PI	45+43.397	39° 04' 39.11" LT	19° 05' 54.94"	300.000'	106.464'	204.609'	656,863.826	236,842.354	PI

ALIGNMENT TABULATION - (825TH) 825TH STREET

POINT NUMBER	POINT	STATION	CURVE DATA					COORDINATES		AZIMUTH
			DELTA	DEGREE	RADIUS	TANGENT	LENGTH			
			SPIRAL CURVE DATA							
			ANGLE (Os)	DEGREE	ST	LT	LS	X	Y	
1930	PI	202+02.669	16° 55' 01.9" RT	11° 27' 33.0"	500.000'	74.356'	147.630'	655,298.117	238,080.603	PI
	CC							655,679.027	237,748.283	
	PT	202+75.943						655,354.710	238,128.833	49° 33' 40.5"
	PC	205+41.644						655,556.934	238,301.176	49° 33' 40.5"
1935	PI	206+61.644	90° 00' 00.0" LT	47° 44' 47.3"	120.000'	120.000'	188.496'	655,648.266	238,379.012	PI

ALIGNMENT TABULATION - (TH63-SLIP) T.H. 63 SLIP

POINT NUMBER	POINT	STATION	CURVE DATA					COORDINATES		AZIMUTH
			DELTA	DEGREE	RADIUS	TANGENT	LENGTH			
			SPIRAL CURVE DATA							
			ANGLE (Os)	DEGREE	ST	LT	LS	X	Y	
	PC	113+00.000						656,836.917	236,663.592	139° 33' 40.4"
1075	PI	113+60.936	24° 33' 19.2" RT	20° 27' 46.0"	280.000'	60.936'	120.000'	656,876.442	236,617.214	PI
	CC							656,623.809	236,481.974	
	PCC	114+20.000						656,893.119	236,558.605	164° 06' 59.7"
	PCC	114+20.000						656,893.119	236,558.605	164° 06' 59.7"
1080	PI	115+17.902	57° 05' 01.0" RT	31° 49' 51.6"	180.000'	97.902'	179.333'	656,919.913	236,464.441	PI
	PT	115+99.333						656,855.425	236,390.778	221° 12' 00.6"

ALIGNMENT TABULATION - (BLUFF) BLUFF ST.

POINT NUMBER	POINT	STATION	CURVE DATA					COORDINATES		AZIMUTH
			DELTA	DEGREE	RADIUS	TANGENT	LENGTH			
			SPIRAL CURVE DATA							
			ANGLE (Os)	DEGREE	ST	LT	LS	X	Y	
1255	PI	54+00.605	23° 38' 22.1" LT	114° 35' 29.6"	50.000'	10.464'	20.629'	656,926.355	236,497.852	PI
	CC							656,901.679	236,453.124	
	PT	54+10.771						656,916.352	236,500.923	287° 03' 56.0"
1260	POT	56+11.947						656,724.034	236,559.961	

REVISION

NO.	DATE	DESCRIPTION	DR.	CHK.	APP'D.

HDR

TITLE: ALIGNMENT TABULATIONS

DES: GB | DR: DJR | APPROVED:
CHK: JZB | CHK: JZB

STATE PROJECT NO. 2515-21

SHEET NO. 3 OF 6 SHEETS

BRIDGE NO. 25035

dgnchel
11/05/2015 3:18 PM
11/4/2015
c:\pwworking\oma\d1023587\00000000017092.tbl
pw:\\PWPOMA001:Northing\Documents\007569\00000000017092\13.00_CAD\Bridge\Plan Shts\Br25035 Over Bluff\5002

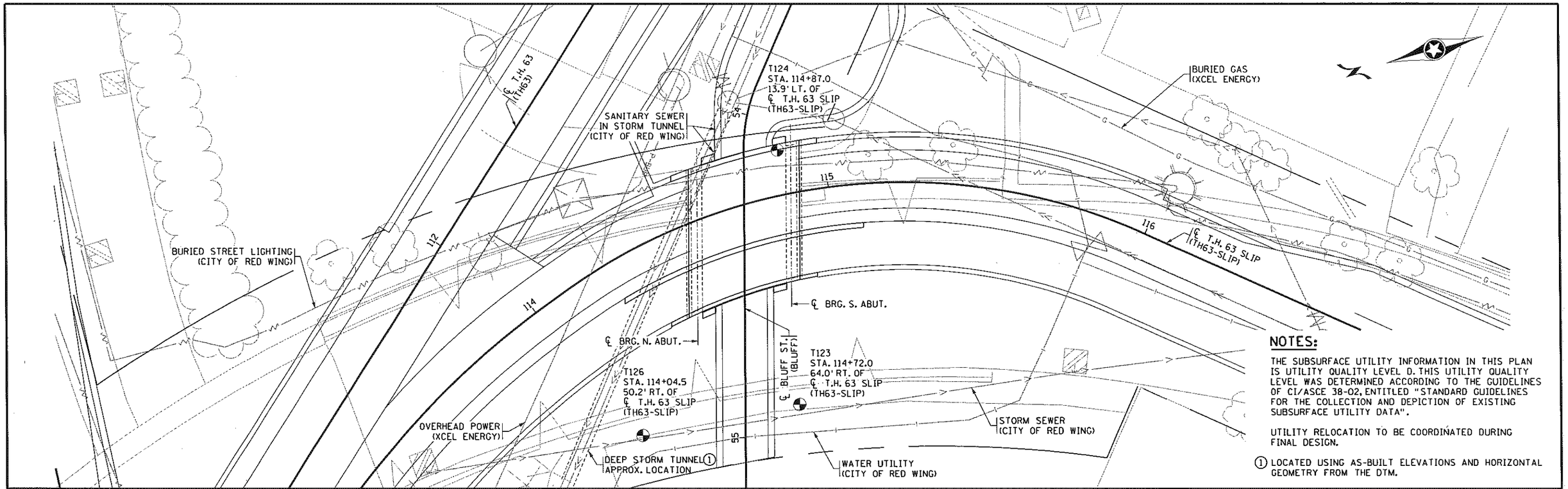

NOTES:

THE SUBSURFACE UTILITY INFORMATION IN THIS PLAN IS UTILITY QUALITY LEVEL D. THIS UTILITY QUALITY LEVEL WAS DETERMINED ACCORDING TO THE GUIDELINES OF CI/ASCE 38-02, ENTITLED "STANDARD GUIDELINES FOR THE COLLECTION AND DEPICTION OF EXISTING SUBSURFACE UTILITY DATA".

UTILITY RELOCATION TO BE COORDINATED DURING FINAL DESIGN.

(1) LOCATED USING AS-BUILT ELEVATIONS AND HORIZONTAL GEOMETRY FROM THE DTM.

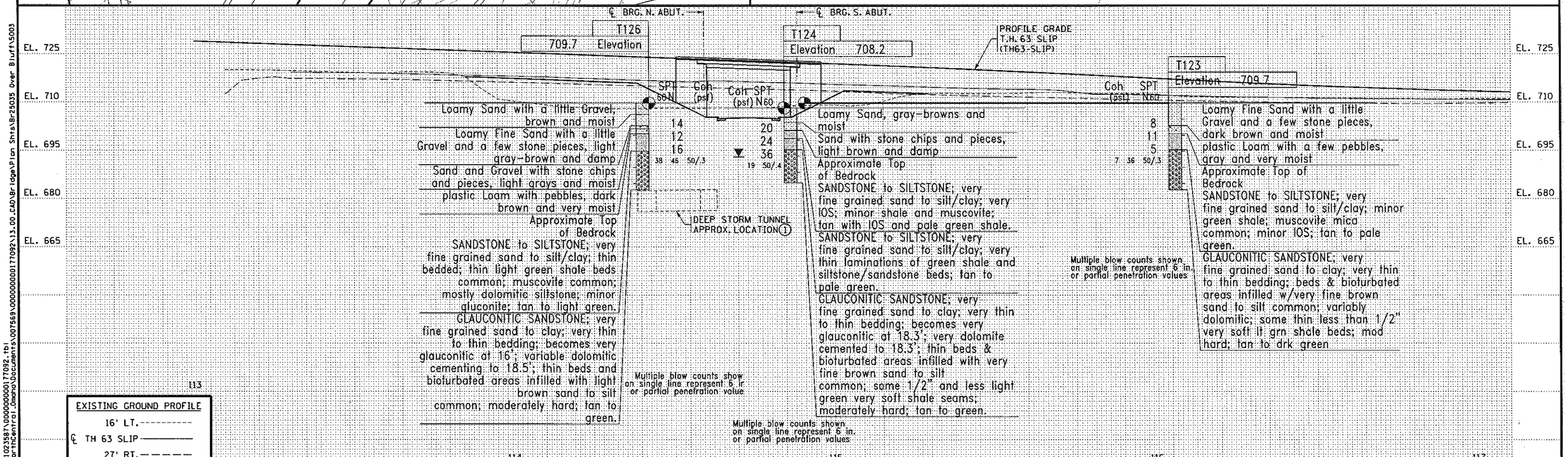

REVISION					
NO.	DATE	DESCRIPTION	DR.	CHK.	APP'D.

HDR

TITLE: BORINGS

DES: DJR	DR: DJR	APPROVED:
CHK: JZB	CHK: JZB	

STATE PROJECT NO. 2515-25035

SHEET NO. 4 OF 6 SHEETS

BRIDGE NO. 25035

c:\pwworking\oma\d0235987\00000000017092.tbl
pw:\\PWAPPOMA001:Northcentral.Oma\Documents\007569\00000000017092\13.00.CAD\Bridge\Plan Shts\Br25035 Over Bluff\5003
dr:cmhl
12:05:39 PM
11/24/2015

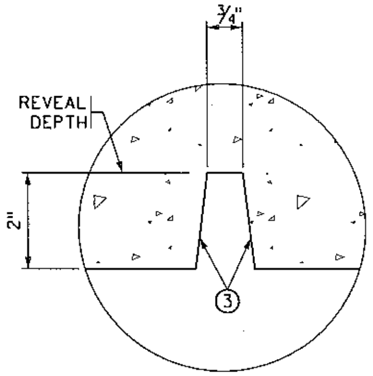

SECTION A-A

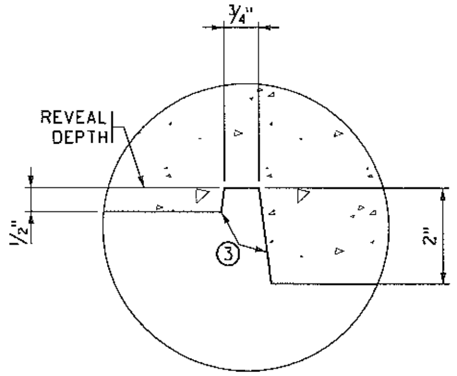

SECTION B-B

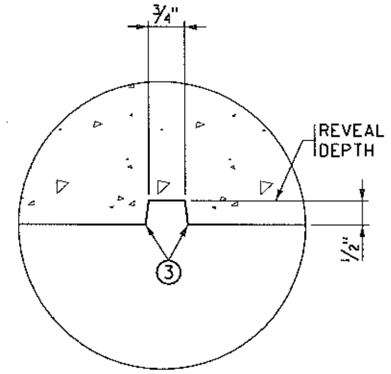

SECTION C-C

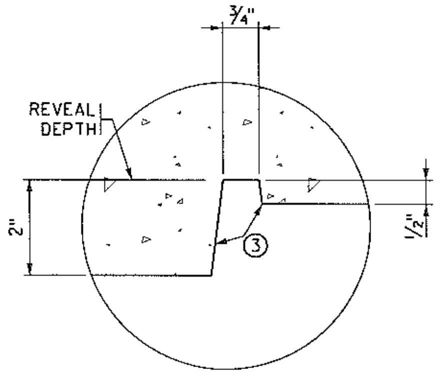

SECTION D-D

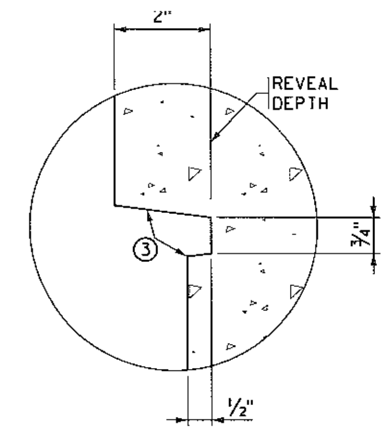

SECTION E-E

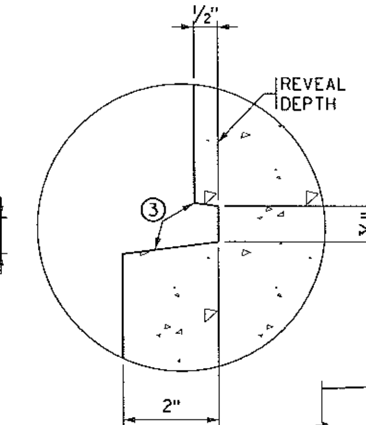

SECTION F-F

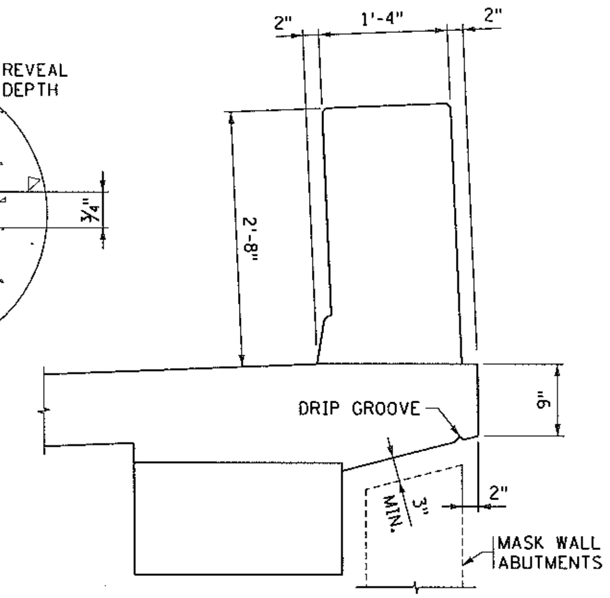

SECTION THRU P-4 BARRIER

(AT EAST FASCIA)

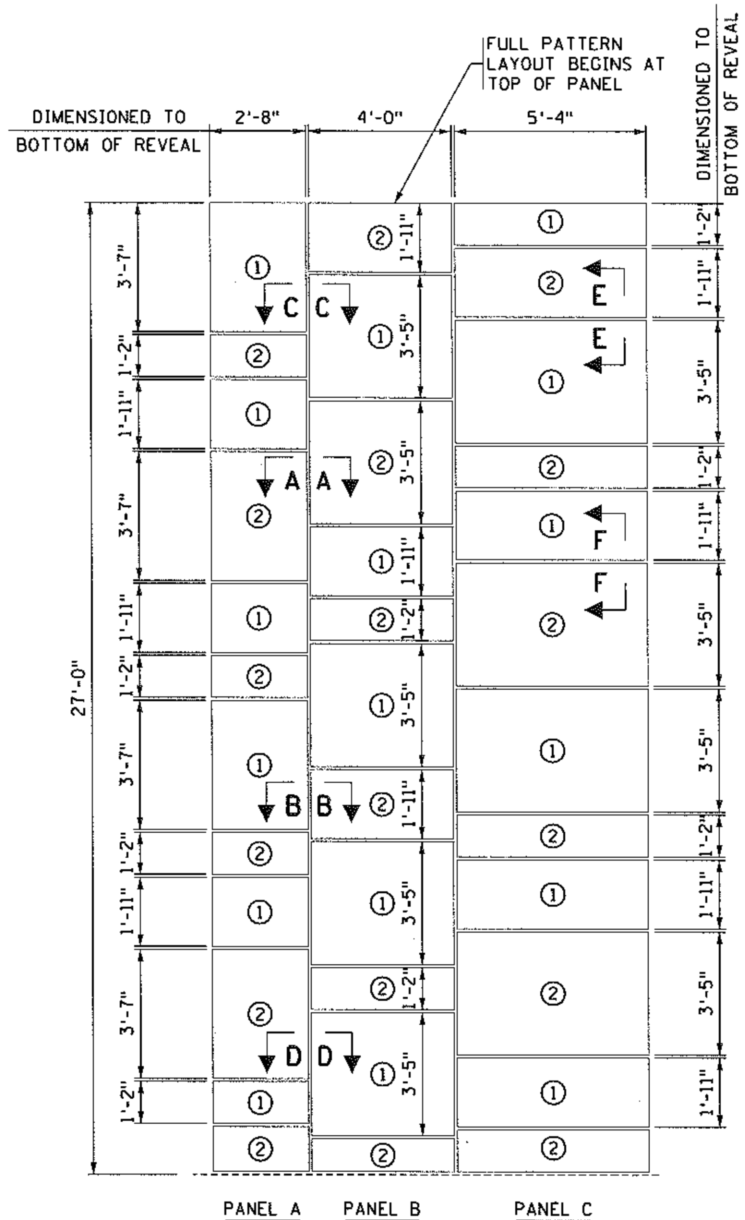

PANEL DETAILS

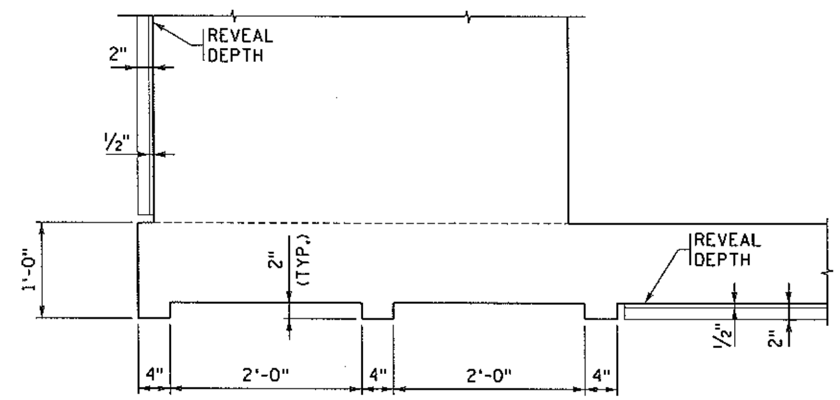

SECTION G-G

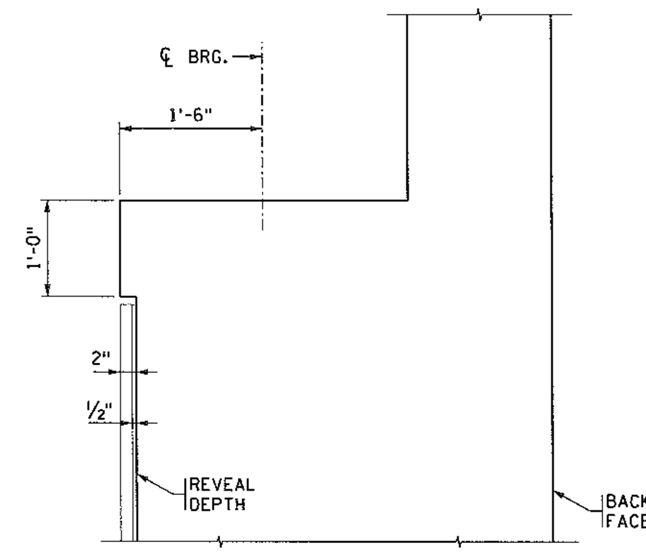

ABUTMENT SECTION

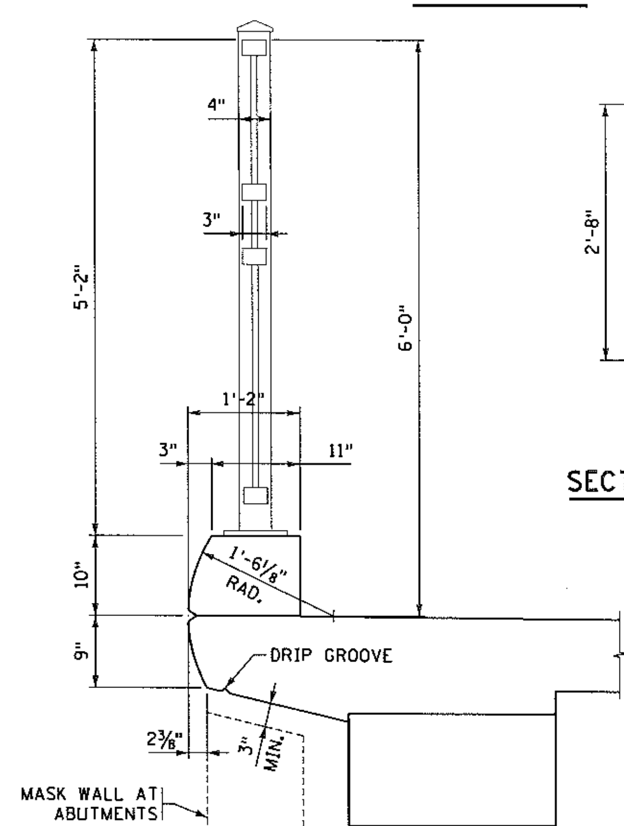

SECTION THRU ORNAMENTAL METAL RAILING

(AT WEST FASCIA)

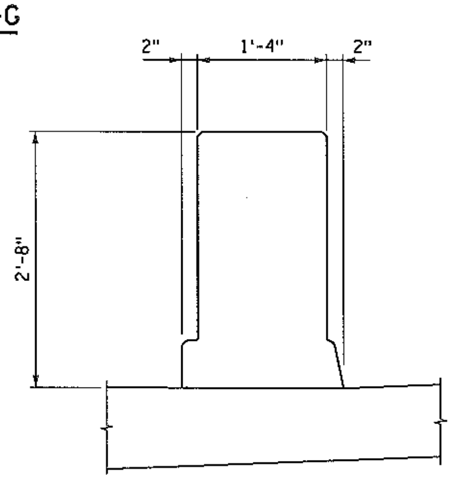

SECTION THRU P-4 BARRIER (MOD.)

(BETWEEN TRAIL AND TRAFFIC)

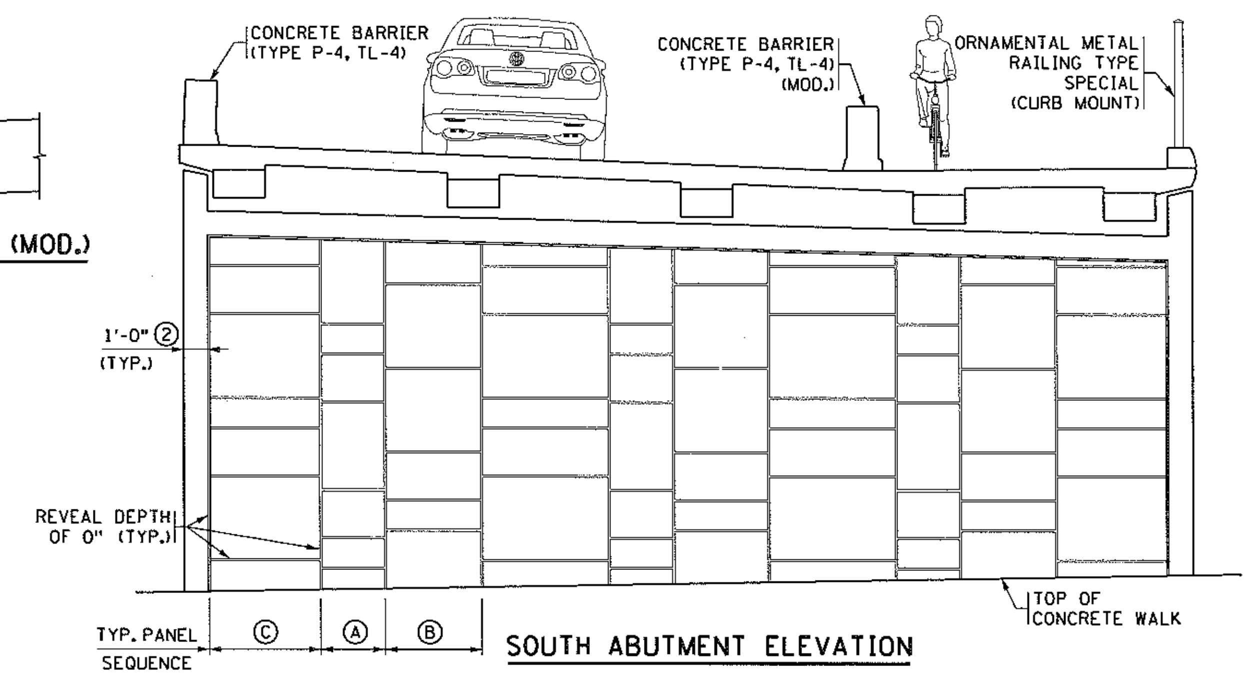

SOUTH ABUTMENT ELEVATION

NORTH ABUTMENT SIMILAR
(SEE BARRIER SECTIONS FOR MASK WALL DETAILS)

NOTES:

FOR ADDITIONAL AESTHETIC DETAILS INCLUDING LOGO, COLORS, TEXTURES AND TREATMENTS, SEE THE VISUAL QUALITY MANUAL.

SEE AESTHETIC DETAILS 2 OF 2 FOR LOCATION OF SECTION G-G.

ALL REVEALS TO BE AT A DEPTH OF 0".

(1) DENOTES +1/2" FROM REVEAL DEPTH

(2) DENOTES +2" FROM REVEAL DEPTH

(3) ALL REVEAL SLOPES 1:8

REVISION					
NO.	DATE	DESCRIPTION	DR.	CHK.	APP'D.

HDR

TITLE: AESTHETIC DETAILS SHEET 1 OF 2

DES: DJR	DR: DJR	APPROVED:
CHK: JZB	CHK: JZB	

STATE PROJECT NO. 2515-25035

BRIDGE NO. 25035

drachel
2:05:43 PM
11/4/2015
c:\pwworking\oma\d1023587\000000000177092.tbl
pw:\\PWAPPOMA001:NorthCentral_Omaha\Documents\007569\000000000177092\13.00_CAD\Bridge\Plan Shts\Br25035 Over Bluff\5004

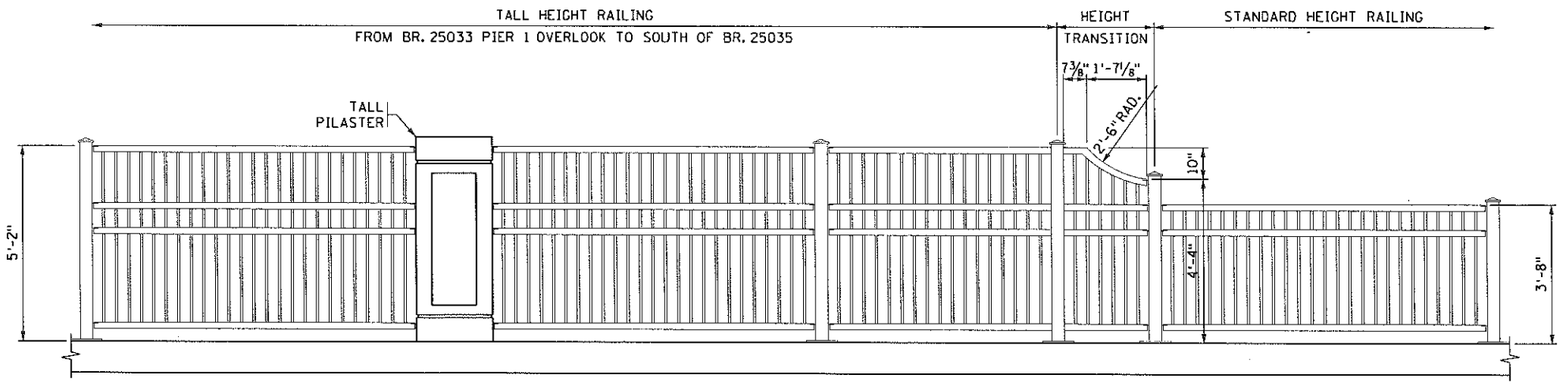

ORNAMENTAL METAL RAILING ELEVATION ②

INSIDE VIEW

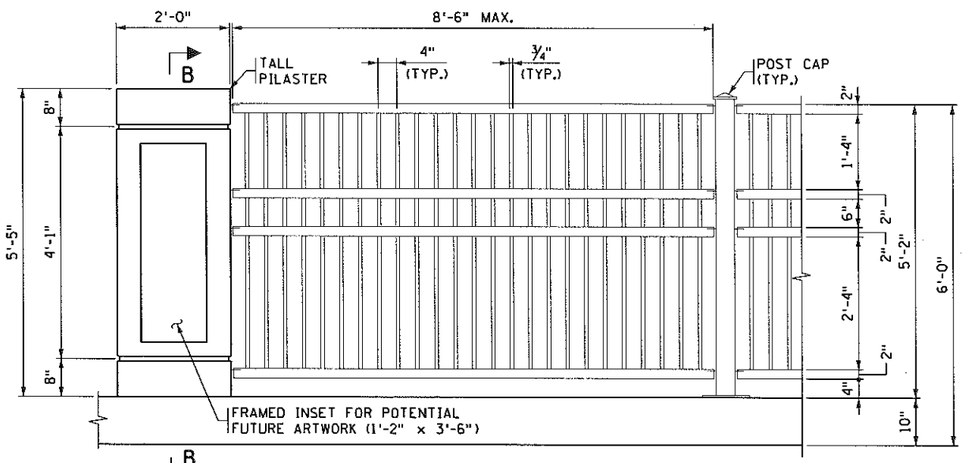

ORNAMENTAL METAL RAILING PANEL

INSIDE VIEW (TALL HEIGHT)

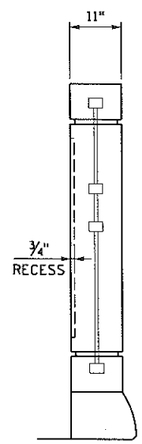

SECTION B-B

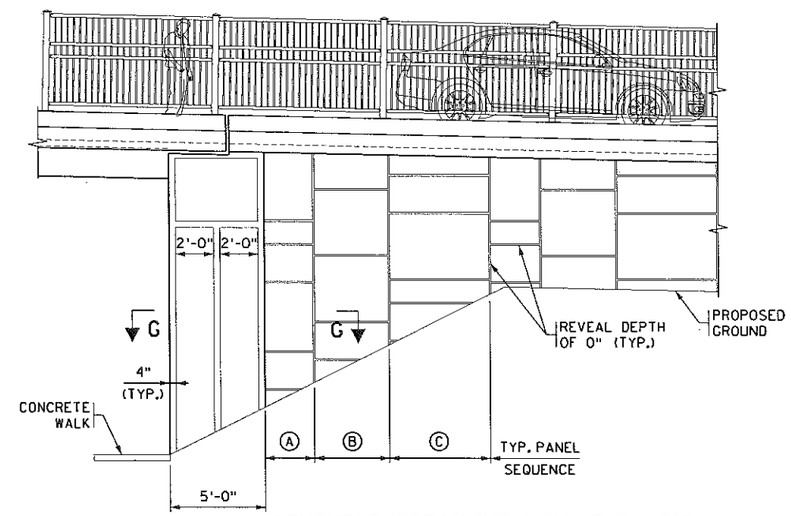

ABUTMENT/RETAINING WALL ELEVATION

(SOUTHWEST RETAINING WALL SHOWN, NORTHWEST SIMILAR) ①

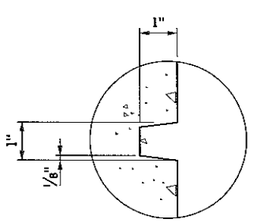

REVEAL DETAIL

TYPICAL ALL PILASTERS

NOTES:

SEE AESTHETIC DETAILS SHEET 1 OF 2 FOR ADDITIONAL NOTES, PANEL DETAILS, AND SECTION G-G.

FOR ADDITIONAL AESTHETIC DETAILS INCLUDING LOGO, COLORS, TEXTURES AND TREATMENTS SEE THE VISUAL QUALITY MANUAL.

SEE VQM FOR LIGHT STANDARD AND PILASTER SPACING REQUIREMENTS. TO BE DEVELOPED DURING FINAL DESIGN. (PILASTERS TO BE LOCATED AT ALL LIGHT STDS.).

① WEST WALL AESTHETICS TO BE COORDINATED WITH MNDOT CULTURAL RESOURCES UNIT DURING FINAL DESIGN. SEE THE VISUAL QUALITY MANUAL.

② ORNAMENTAL METAL RAILING CONTINUES ON RETAINING WALLS ON BOTH ENDS OF BRIDGE. COORDINATE CONNECTION DETAIL AND LOCATION BETWEEN BRIDGE AND ROAD FINAL DESIGN.

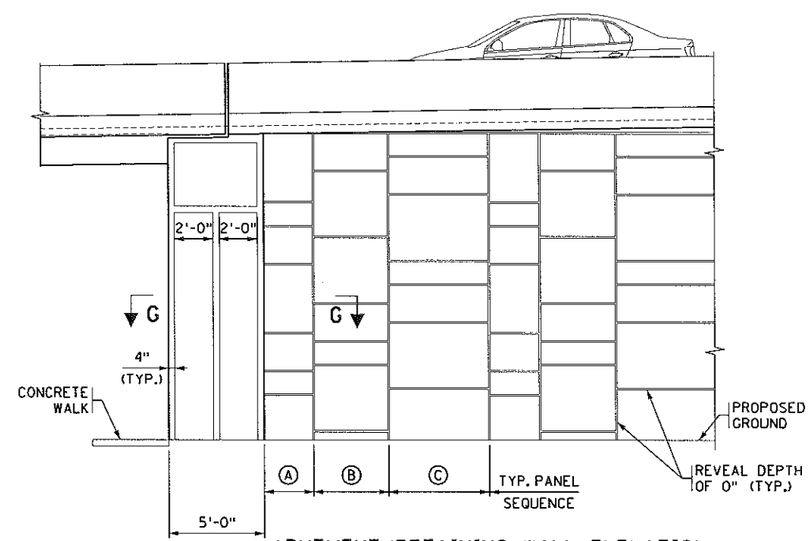

ABUTMENT/RETAINING WALL ELEVATION

(NORTHEAST RETAINING WALL SHOWN, SOUTHEAST SIMILAR)

REVISION					
NO.	DATE	DESCRIPTION	DR.	CHK.	APP'D.

HDR

TITLE: AESTHETIC DETAILS SHEET 2 OF 2

DES: DJR | DR: DJR | APPROVED:
CHK: JZB | CHK: JZB

STATE PROJECT NO. 2515-25035

SHEET NO. 6 OF 6 SHEETS

BRIDGE NO. 25035

dr-ochal
2015 1:15 PM
11/4/2015
cr:\bwworking\ama\d102587\D000000001177092.rbl
pw:\\PWPPOMA001.NORTHCENTRAL.ONEHQ\Documents\007569\0000000001177092\13.00.CAD\Bridge\Plan Shts\Br25035 Over Bluff\5005