MINNESOTA DEPARTMENT OF TRANSPORTATION

395 JOHN IRELAND BOULEVARD MS 650 ST. PAUL, MINNESOTA 55155-1800

********** P R O P O S A L **********

FOR HIGHWAY CONSTRUCTION AND MAINTENANCE PROJECTS WITH
BIDS RECEIVED UNTIL 9:30 O'CLOCK A.M. ON

June 27, 2014

Proposal of _____
(NAME OF FIRM)

_____
(ADDRESS)

_____
(AREA CODE-TELEPHONE NUMBER)

TO FURNISH AND DELIVER ALL MATERIALS AND TO PERFORM ALL WORK IN ACCORDANCE WITH THE CONTRACT, THE PLANS AND THE APPROVED DEPARTMENT OF TRANSPORTATION "STANDARD SPECIFICATIONS FOR CONSTRUCTION, **2014 EDITION" (USING ENGLISH UNITS),** ON FILE IN THE OFFICE OF THE COMMISSIONER OF TRANSPORTATION EXCEPT AS STATED OTHERWISE IN THE SPECIAL PROVISIONS, WHICH ARE PART OF THIS PROPOSAL, FOR:

PRIME SP: 2710-2440B CONTRACT ID 140147

STATE PROJECT NO. 2710-2440B (T.H. 65)

FHWA PROJECT NO. STATE FUNDS

LOCATION: In Hennepin County on Bridge No. 2440 Located at T.H. 65 Over Mississippi River and City Streets 6.0 mi. South of Jct. of I35W and T.H. 65

TYPE OF WORK: Bridge Repair

LENGTH:

STARTING DATE: August 11, 2014 COMPLETION DATE: October 24, 2014

NOTICE TO BIDDERS: If you are submitting a bid via "Two Way Electronic" bidding, you need not return the hard copy proposal **(all other requirements shall remain in effect).** If you are utilizing **ANY OTHER ACCEPTED METHOD OF BID SUBMITTAL, YOU MUST RETURN THE DOCUMENTS INDICATED IN 1209.** You must initial changes made in the "Bid Schedule" and acknowledge addenda on Form 21126D, which is attached to the back of this proposal.

I certify that this Proposal was prepared by me or under my direct supervision, and that I am a duly Licensed Professional Engineer under the laws of the State of Minnesota.

Paul C. Merchlewicz, Special Provisions Engineer SJP
Lic. No. 41239 Date: May 29, 2014

BID RIGGING IS A SERIOUS CRIME. IF YOU HAVE ANY INFORMATION CONCERNING COLLUSIVE BIDDING, EVEN A REQUEST TO SUBMIT A COMPLIMENTARY BID, PLEASE CALL THE MINNESOTA ATTORNEY GENERAL'S OFFICE AT TELEPHONE NO. 651-296-1796

To request this document in an alternative format, please contact the Affirmative Action Office at 651-366-4718 or 1-800-657-3774 (Greater Minnesota); 711 or 1-800-627-3529 (Minnesota Relay). You may also send an e-mail to ADArequest.dot@state.mn.us. (Please request at least one week in advance).

To the Commissioner of Transportation of the State of Minnesota:

Sir: According to the advertisement of the Commissioner of Transportation inviting proposals for the improvement of the section of highway hereinbefore named, and in conformity with the Contract, Plans, Specifications and Special Provisions pertaining thereto, all on file in the office of the Commissioner of Transportation:

(I)(We) hereby certify that (I am)(we are) the only person(s) interested in this proposal as principal(s); that this proposal is made and submitted without fraud or collusion with any other person, firm or corporation at all; that an examination has been made of the site of the work and the Contract form, with the Plans, Specifications and Special Provisions for the improvement.

(I)(We) understand that the quantities of work shown herein are approximate only and are subject to increase or decrease; that all quantities of work, whether increased or decreased within the limits specified in Mn/DOT 1903, are to be done at the unit prices shown on the attached schedule; that, at the time of opening bids, totals only will be read, but that comparison of bids will be based on the correct summation of item totals obtained from the unit prices bid, as provided in Mn/DOT 1301.

(I)(We) propose to furnish all necessary machinery, equipment, tools, labor and other means of construction and to furnish all materials specified, in the manner and at the time prescribed, all according to the terms of the Contract and Plans, Specifications, and the Special Provisions forming a part of this.

(I)(We) further propose to do all Extra Work that may be required to complete the contemplated improvement, at unit prices or lump sums to be agreed upon in writing before starting such work, or if such prices or sums cannot be agreed upon, to do such work on a Force Account basis, as provided in Mn/DOT 1904.

(I)(We) further propose to execute the form of Contract within 10 days after receiving written notice of award, as provided in Mn/DOT 1306.

(I)(We) further propose to furnish a payment bond equal to the Contract amount, and a performance bond equal to the Contract amount, with the aggregate liability of the bond(s) equal to twice the full amount of the Contract, as security for the construction and completion of the improvement according to the Plans, Specifications and Special Provisions as provided in Mn/DOT 1305.

(I)(We) further propose to do all work according to the Plans, Specifications and Special Provisions, and to renew or repair any work that may be rejected due to defective materials or workmanship, before completion and acceptance of the Project by the Commissioner of Transportation.

(I)(We) agree to all provisions of Minnesota Statutes, Section 181.59.

(I)(We) further propose to begin work and to prosecute and complete the same according to the time schedule set forth in the Special Provisions for the improvement.

(I)(We) assign to the State of Minnesota all claims for overcharges as to goods and materials purchased in connection with this Project resulting from antitrust violations that arise under the antitrust laws of the United States and the antitrust laws of the State of Minnesota. This clause also applies to subcontractors and first tier suppliers under this Contract.

DEPARTMENT OF TRANSPORTATION

NOTICE OF SUSPENSION

NOTICE IS HEREBY GIVEN that MnDOT has ordered that the following vendors be suspended effective May 15, 2014, until July 15, 2014:

- GCC Alliance Concrete, Inc., Minneapolis, MN

NOTICE OF DEBARMENT

NOTICE IS HEREBY GIVEN that MnDOT has ordered that the following vendors be debarred for a period of three (3) years, effective May 6, 2013 until May 6, 2016:

- Gary Francis Bauerly and his affiliates, Rice, MN
- Gary Bauerly, LLC and its affiliates, Rice, MN
- Watab Hauling Co. and its affiliates, Rice, MN

Minnesota Statute section 161.315 prohibits the Commissioner, counties, towns, or home rule or statutory cities from awarding or approving the award of a contract for goods or services to a person who is suspended or debarred, including:

1) any contract under which a debarred or suspended person will serve as a subcontractor or material supplier,
2) any business or affiliate which the debarred or suspended person exercises substantial influence or control, and
3) 3) any business or entity, which is sold or transferred by a debarred person to a relative or any other party over whose actions the debarred person exercises substantial influence or control, remains ineligible during the duration of the seller's or transfer's debarment.

DEPARTMENT OF ADMINISTRATION

As of the date of this notice and in accordance with Minnesota Rules 1230.1150, the Minnesota Department of Administration has debarred and disqualified the following persons and businesses from entering into or receiving a State of Minnesota contract:

NAME	DATE OF SUSPENSION
MG Carlson Construction Company, Inc. 701 East First Street Fort Worth, TX 76102-3276	March 5, 2014 through Sept. 5, 2014
TAC Construction Solutions, Inc. 31767 Deacons Way Pequot Lakes, MN 56472	Feb. 18, 2014 through Aug. 18, 2014
NAME	**DATE OF DEBARMENT**
Best Used Trucks of Minnesota, Inc. 635 Marin Ave. Crookston, MN 56716	Nov. 20, 2012 through Nov. 20, 2015 (eligible for reinstatement on Nov. 20, 2016)
Bull Dog Leasing, Inc. 7854 Danner Court Inver Grove Heights, MN 55076	Aug. 30, 2011 through Aug. 30, 2014 (eligible for reinstatement on Aug. 30, 2015)
DCP Forestry 500 Eisenhower St. #110 Sandstone, MN 55072	May 17, 2012 through May 17, 2013 (eligible for reinstatement on May 18, 2014)
Danner Family Ltd. Ptnship. 843 Hardman Ave. S. S. St. Paul, MN 55075	Aug. 30, 2011 through Aug. 30, 2014 (eligible for reinstatement on Aug. 30, 2015)
Danner, Inc. 843 Hardman Ave. S. S. St. Paul, MN 55075	Aug. 30, 2011 through Aug. 30, 2014 (eligible for reinstatement on Aug. 30, 2015)
Ell-Z Trucking, Inc. 843 Hardman Ave. S. S. St. Paul, MN 55075	Aug. 30, 2011 through Aug. 30, 2014 (eligible for reinstatement on Aug. 30, 2015)
Franklin Drywall, Inc. 43279 Fieldsview Crt. Leesburg, VA 20176	March 25, 2011 through March 25, 2014 (eligible for reinstatement on March 25, 2015)
Master Drywall, Inc. 43279 Fieldsview Crt. Leesburg, VA 20176	March 25, 2011 through March 25, 2014 (eligible for reinstatement on March 25, 2015)
Watab Hauling Co. Gary Francis Bauerly 9695 Deerwood Rd. NE Rice, MN 56367	Jan. 14, 2013 through Jan. 14, 2016 (eligible for reinstatement on Jan. 14, 2017)

Minnesota Administrative Rule part 1230.1150, subpart 6 requires the Materials Management Division to maintain a master list of all suspensions and debarments. The master list must retain all information concerning suspensions and debarments as a public record for at least three (3) years following the end of a suspension or debarment. Refer to the following website for the master list: http://www.mmd.admin.state.mn.us/debarredreport.asp.

If the project is financed in whole or in part with federal funds, refer to the following website for vendors debarred by federal government agencies: http://sam.gov.

Section No.	Item	Page No.
	DIVISION A	
A-1	Governing Specifications	1-A
A-2	Labor Provisions	1-A
	DIVISION S	
S-1	CONTACT INFORMATION	1-S
S-2	REFERENCE INFORMATION DOCUMENTS	1-S
S-3	EMERALD ASH BORER COMPLIANCE	1-S
S-4	USE OF ADHESIVE ANCHORS	2-S
S-5	TARGETED GROUP BUSINESS (TGB) AND VETERAN-OWNED SMALL BUSINESS	2-S
S-6	ELECTRONIC SUBMISSION OF PAYROLLS AND STATEMENTS AND BIDDERS LISTS FOR STATE FUNDED PROJECTS	2-S
S-7	(1103) DEFINITIONS	4-S
S-8	(1209) DELIVERY OF PROPOSALS	5-S
S-9	(1404) MAINTENANCE OF TRAFFIC AND (2563) TRAFFIC CONTROL	5-S
S-10	(1507) UTILITY PROPERTY AND SERVICE	15-S
S-11	(1512) UNACCEPTABLE WORK	15-S
S-12	(1513) RESTRICTIONS ON MOVEMENT AND STORAGE OF HEAVY LOADS AND EQUIPMENT	16-S
S-13	(1514) MAINTENANCE DURING CONSTRUCTION	16-S
S-14	(1517) CLAIMS FOR COMPENSATION ADJUSTMENT	16-S
S-15	(1602) NATURAL MATERIAL SOURCES	19-S
S-16	(1701) LAWS TO BE OBSERVED (WET LANDS)	20-S
S-17	(1701) LAWS TO BE OBSERVED (CULTURAL RESOURCES – STATE FUNDED)	20-S
S-18	(1706) EMPLOYEE HEALTH AND WELFARE	21-S
S-19	(1707) PUBLIC CONVENIENCE AND SAFETY	22-S
S-20	(1710) TRAFFIC CONTROL DEVICES	22-S
S-21	(1712) PROTECTION AND RESTORATION OF PROPERTY AND LANDSCAPE	22-S
S-22	(1801) SUBLETTING OF CONTRACT	22-S
S-23	(1802) TRAINING FOR CONSTRUCTION TRUCK OPERATORS	23-S
S-24	(1803) PROJECT SCHEDULES	23-S
S-25	(1806) DETERMINATION AND EXTENSION OF CONTRACT TIME	27-S
S-26	(1807) FAILURE TO COMPLETE THE WORK ON TIME	27-S

S-27 (1910) FUEL ESCALATION CLAUSE 28-S
S-28 (2104) REMOVING PAVEMENT AND MISCELLANEOUS STRUCTURES 28-S
S-29 (2104) ABATE ASBESTOS-CONTAINING PIPES OR CULVERTS 28-S
S-30 (2461) STRUCTURAL CONCRETE 30-S
S-31 (2471) STRUCTURAL METALS 31-S
S-32 (2472) METAL REINFORCEMENT 34-S
S-33 (2571) PLANT INSTALLATION 34-S
S-34 (2573) STORM WATER MANAGEMENT 37-S
S-35 (2574) SOIL PREPARATION 39-S
S-36 (2575) ESTABLISHING TURF AND CONTROLLING EROSION 39-S
S-37 (3137) COARSE AGGREGATE FOR PORTLAND CEMENT CONCRETE 40-S
S-38 (3149) GRANULAR MATERIAL 40-S
S-39 (3733) GEOTEXTILES 41-S
S-40 (3882) MULCH MATERIAL 42-S
S-41 FINAL ESTIMATE AND FINAL PAYMENT 43-S

The Special Provisions for Bridge Construction (Division SB) and the tabulation of the bridge plans follows Division S in this Proposal.

Attached: Fuel Escalation Clause
Attachment “Schedule of Materials Control”
Attachment " Targeted Group Business (TGB) and Veteran-Owned Small Business Special Provisions"
Equal Opportunity Employee Provisions
Bid Bond Form

PROJECT PLANS

The Plans for this Project, consisting of the sheets tabulated below, were approved by the State Design Engineer.

PROJECT NO.	TYPE OF WORK	TOTAL SHEETS	SHEET NO.	DATE OF APPROVAL
S.P. 2710-2440B	Bridge Repair No. 2440	19	1 – 19	N/A

New or revised sheets were approved as listed below:

PROJECT NO.	SHEET NO.	DATE OF APPROVAL

INDEX TO DIVISION SB

DIVISION SB

Section No.	Item	Page No.
SB-1	SCOPE OF WORK	3-SB
SB-2	BRIDGE PLANS	3-SB
SB-3	(1513) RESTRICTIONS ON MOVEMENT AND STORAGE OF HEAVY LOADS AND EQUIPMENT	3-SB
SB-4	(1706) EMPLOYEE HEALTH AND WELFARE	4-SB
SB-5	(1709) NAVIGABLE WATERWAYS	5-SB
SB-6	(1717) AIR, LAND, AND WATER POLLUTION	6-SB
SB-7	(1903) INCREASED AND DECREASED QUANTITIES	7-SB
SB-8	(2104) REMOVE MISCELLANEOUS DEBRIS	7-SB
SB-9	(2433) STRUCTURE RENOVATION	8-SB
SB-10	(2461) STRUCTURAL CONCRETE	23-SB
SB-11	HIGH MOBILILTY GROUT	23-SB
SB-12	(2472) METAL REINFORCEMENT	31-SB
SB-13	TEMPORARY DOLPHIN CABLE REMOVAL	35-SB
SB-14	CONCRETE GROUT FILLED FABRIC BAGS	35-SB
SB-15	ARMY CORPS OF ENGINEERS GATE AND RESERVOIR	37-SB
SB-16	PROJECT STAGING AND SITE DEVELOPMENT	37-SB

BRIDGE PLANS

The plans for this Project, consisting of the sheets tabulated below, were approved by the State Bridge Engineer.

BRIDGE NO.	TOTAL SHEETS	SHEET NO.	DATE OF APPROVAL
2440	19	1-19	5/XX/2014

New or revised sheets were approved as listed below:

BRIDGE NO.	SHEET NO.	DATE OF APPROVAL

I hereby certify that the Special Provisions for bridge construction (Division SB) contained in this Proposal were prepared by me or under my direct supervision, and that I am a duly licensed Professional Engineer under the laws of the State of Minnesota.

(Jacob Bronder)

Date: May 22, 2014 Lic. No. 41848

STATE FUNDED CONSTRUCTION CONTRACTS
SPECIAL PROVISIONS DIVISION A - LABOR
June 3, 2013

I. PREAMBLE

It is in the public interest that public buildings and other public works projects be constructed and maintained by the best means and the highest quality of labor reasonably available and that persons working on public works projects be compensated according to the real value of the services they perform.[1]

This contract is subject to the Minnesota Prevailing Wage Act[2], Rules[3], Wage Decisions, and Truck Rental Rate Schedules established by the Minnesota Department of Labor and Industry (MnDLI). All contractors and subcontractors must pay each laborer and mechanic the established total prevailing wage rate for the actual work performed under this contract. Failure to comply may result in civil or criminal penalties and may compel the Minnesota Department of Transportation (MnDOT) to take such actions as prescribed in section: **XVI (NON-COMPLIANCE AND ENFORCEMENT).**

Upon MnDOT's request, the prime contractor must promptly furnish copies of payroll records for its workers and those of all subcontractors, along with other records, documents or agreements deemed appropriate by agency to determine compliance with these contract provisions.[4]

Questions related to the Special Provisions Division A can be directed to the MnDOT Labor Compliance Unit (LCU) by calling (651) 366-4209 or by visiting its website at: www.dot.state.mn.us/const/labor

II. DEFINITIONS

Terms utilized in the Special Provisions Division A are defined in MnDOT's Standard Specifications for Construction[5], unless defined below.

A. **Contractor**: The term "contractor" in these provisions shall include the prime contractor, subcontractor, agent, or other person doing or contracting to do all or part of the work under this contract.[6]

B. **Employer**: An individual, partnership, association, corporation, business trust, or other business entity that hires a laborer, worker, or mechanic.[7]

C. **First Tier Subcontractor**: An individual, firm, corporation, or other entity to which the prime contractor sublets part of the contract.

D. **Independent Truck Owner/Operator (ITO)**: An individual, partnership, or principal stockholder of a corporation who owns or holds a vehicle under lease and who contracts that vehicle and the owner's services to an entity which provides construction services to a public works project.[8]

E. **Laborer or Mechanic**: A worker in a construction industry labor class identified in or pursuant to Minnesota Rules 5200.1100, Master Job Classifications.[9]

F. **Prime Contractor**: The individual, firm, corporation, or other entity contracting for and undertaking prosecution of the prescribed work; the party of the second part to the contract, acting directly or through a duly authorized representative.

[1] Minnesota Statute 177.41
[2] Minnesota Statute 177.41 to 177.44
[3] Minnesota Rules 5200.1000 to 5200.1120
[4] Minnesota Statute 177.44, Subdivision 7 and Minnesota Rules 5200.1106, Subpart 10
[5] MN/DOT Standard Specifications for Construction, Section 1103
[6] Minnesota Statute 177.44, Subdivision 1
[7] Minnesota Statute 177.42, Subdivision 7
[8] Minnesota Rules 5200.1106, Subpart 7(A)
[9] Minnesota Rules 5200.1106, Subpart 5(A)

G. **Second Tier Subcontractor**: An individual, firm, corporation, or other entity to which a first tier subcontractor sublets part of the contract.

H. **Substantially In Place**: Mineral aggregate is deposited on the project site directly or through spreaders where it can be spread from or compacted at the location where it was deposited.[10]

I. **Trucking Broker**: An individual or business entity, the activities of which include, but are not limited to: contracting to provide trucking services in the construction industry to users of such services, contracting to obtain such services from providers of trucking services, dispatching the providers of the services to do work as required by the users of the services, receiving payment from the users in consideration of the trucking services provided, and making payment to the providers for the services.[11]

J. **Trucking Firm/Multiple Truck Owner (MTO)**: Any business entity that owns more than one vehicle and hires the vehicles out for services to brokers or contractors on public works projects.[12]

III. SCOPE – SPECIAL PROVISIONS DIVISION A & CONTRACT

A. These provisions shall apply to the prime contractor, all subcontractors, or agents contracting to do all or part of the work under this contract.[13]

B. The prime contractor is required to ensure that all lower tier subcontractors receive with their written subcontracts, agreements and/or purchase orders a copy of the contract labor provisions (Special Provision – Division A), the contract wage decision(s), and truck rental rate decision(s).

C. An unpublished decision from the Minnesota Court of Appeals affirms the authority of the Minnesota Commissioner of Transportation to enforce the Minnesota Prevailing Wage Law on a case-by-case basis without prior notification.[14]

IV. PAYROLLS AND STATEMENTS

A. The prime contractor must submit its payroll statements, along with those of its subcontractors to MnDOT.[15] The payroll statements include a payroll report and a statement of compliance.[16] The statements shall be submitted within fourteen (14) calendar days after the end of each contractor's pay period.[17] All contractors shall pay its employees at least once every fourteen (14) calendar days.[18]

B. Payroll Report: the report may be submitted in any manner and must include all the information contained in **Subpart A (1 - 11)** of this section. However, contractors needing a payroll form may utilize the **MnDOT Payroll Form**, which is made available on the MnDOT LCU website.[19] Each payroll report must include all workers that performed work as a laborer or mechanic under this contract and provide at minimum the following information:

1. contractor's name, address, and telephone number;
2. state project number;
3. payroll report number;
4. project location;
5. workweek end date;
6. each employee's name, home address, and full (or last four digits of) social security number;

[10] Minnesota Rules 5200.1106, Subpart 5(C)
[11] Minnesota Rules 5200.1106, Subpart 7(C)
[12] Minnesota Rules 5200.1106, Subpart 7(B)
[13] Minnesota Statute 177.44, Subdivision 1
[14] See *International Union of Operating Eng'rs, Local 49 v. MnDOT*, No. C6-97-1582, 1998 WL 74281, at *2 (Minn. App. Feb. 24, 1998).
[15] Minnesota Statute 177.44, Subdivision 7
[16] Minnesota Rules 5200.1106, Subpart 10
[17] Minnesota Statute 177.30, (a) (4)
[18] Minnesota Statute 177.30 (a) (4)
[19] www.dot.state.mn.us/const/labor/forms.html

7. labor classification(s) titles and optional three-digit code for each employee;
8. hourly straight time and overtime wage rates paid to each employee;
9. daily and weekly hours worked in each classification, including overtime hours for each employee;
10. authorized legal deductions for each employee; and
11. project gross amount, weekly gross amount, and net wages paid to each employee. [20]

D. Statement of Compliance: the payroll report must be accompanied with a completed and signed **MN/DOT, 21658 - Statement of Compliance Form,** identifying any fringe contributions made on behalf of each worker.[21] The prime contractor is required to review the information submitted by each subcontractor and sign the Statement of Compliance Form.

E. The prime contractor is responsible for assuring that its payroll reports, and those of each subcontractor, include all workers that performed work under this contract and accurately reflect the hours worked, regular and overtime rates of pay, and classifications of work performed.[22]

F. The prime contractor is responsible for maintaining all certified payroll records, including those of all subcontractors, throughout the course of a construction project and retaining all records for a period of three (3) years after the final contract voucher has been issued.[23] All contractors are responsible for maintaining their supporting employment records relating to this contract for a minimum period of three (3) years after the final contract payment has been made; other laws may have longer retention requirements.

G. At the end of each pay period, each contractor shall provide every employee, in writing or by electronic means, an accurate, detailed earnings statement.[24]

H. If, after written notice, the prime contractor fails to submit its payroll reports and certification forms, or its subcontractors fail to submit same, MnDOT may implement the actions prescribed in section **XVI (NON-COMPLIANCE AND ENFORCEMENT).**

V. WAGE RATES

A. The prime contractor is responsible to ensure that its workers and those of all subcontractors are compensated according to the state prevailing wage determinations included and/or incorporated into this contract. All contractors shall pay each worker the required minimum total hourly wage rate for all hours worked on the project at the appropriate classification(s) of labor for the work performed by the worker.

1. State highway and heavy wage determinations are issued for ten separate regions throughout the state of Minnesota. If the contract work is located in more than one region, the applicable wage decision for each region shall be incorporated into this contract. If the contract contains multiple state highway and heavy wage determinations, there shall be only one standard of hours of labor and wage rate for each classification of labor. [25]
2. State commercial wage determinations are issued for each county throughout the state of Minnesota. If the contract work is located in more than one county, the applicable wage determination for each county shall be incorporated into this contract. If the contract contains multiple commercial wage determinations, each determination applies to the classification(s) of work performed in the county for which it was issued.

[20] Minnesota Rules 5200.1106, Subpart 10 and Minnesota Statute 177.30
[21] Minnesota Rules 5200.1106, Subpart 10
[22] Minnesota Statute 177.30(1)(2)(3)(4)
[23] Minnesota Statute 177.30 (a) (5)
[24] Minnesota Statute 181.032
[25] Minnesota Statute 177.44, Subdivision 4

B. Wage rates listed in the state wage determination(s) contain two components: the hourly basic rate and the fringe rate. The hourly basic rate plus the fringe rate equal the total prevailing wage rate. A contractor shall compensate workers a combination of cash and fringe benefits equaling, at minimum, the total prevailing wage rate.[26]

C. The certified wage decision(s) incorporated into the contract remains in effect for the duration of this contract unless replaced by the Department through an addendum or supplemental agreement. No increase in the contract price shall be allowed or authorized due to wage rates that exceed those incorporated into this contract.

D. From the time a worker is required to report for duty at the project site until the worker is allowed to leave the site, no deductions shall be made from the worker's hours for any delays of less than twenty consecutive minutes.[27]

E. In situations where a delay may exceed twenty (20) consecutive minutes and the contractor requires a worker to remain on the premises, or so close to the premises that the worker cannot use the time effectively for the worker's own purposes, the worker is considered "on-call"[28] and shall be compensated in accordance with **Subpart B** of this section, unless the worker is completely relieved of duty and free to leave the premises for a definite period of time[29].

F. A contractor making payment to an employee, laborer, mechanic, or worker may not accept a rebate for the purpose of reducing or otherwise decreasing the value of the compensation paid.[30]

G. Deductions from the total prevailing wage rate, whether direct or indirect, shall not be allowed for the following:

1. purchase or rental of uniforms or non-home maintenance of uniforms;

2. consumable supplies, which means materials required to perform duties of employment and are used during the course of employment;

3. travel expenses, which means receipted out-of-pocket expenses for transportation, meals and lodging, or an agreed upon allowance, whichever is greater; or

4. other items as established in Minn. Rules 5200.0090. [31]

VI. BONA FIDE FRINGE BENEFITS

A. A contractor that does not provide fringe benefits to its employees shall compensate each worker the total prevailing wage rate for the classification of work performed.

B. A "funded" fringe benefit plan is one that allows the contractor to make irrevocable contributions on behalf of an employee to a financially responsible trustee, third person, fund, plan, or program without prior approval from the U.S. Department of Labor. Types of "funded" fringe benefits may include, but are not limited to: pension, health insurance, and life insurance.[32]

C. An "unfunded" fringe benefit plan or program is one that allows the contractor to furnish an in-house benefit on behalf of an employee. The cost to provide the benefit is funded from the contractor's general assets rather than contributions made to a trustee, third person, fund, plan, or program. Types of "unfunded" fringe benefits may include, but are not limited to: holiday, vacation, and sick plans.[33]

[26] Minnesota Statute 177.42, Subdivision 6 and 177.44, Subdivision 1
[27] Minnesota Rules 5200.0120,Subpart 1
[28] Minnesota Rules 5200.0120, Subpart 2
[29] Minnesota Rules 5200.0120, Subpart 3
[30] Minnesota Rules 5200.1106, Subpart 6
[31] Minnesota Rules 5200.0090
[32] 29 CFR Parts 5.26 and 5.27
[33] 29 CFR Part 5.28

D. Allowable credit toward the total prevailing wage rate shall be determined for each individual employee based on all hours worked (government and non-government) for bona fide fringe benefits that:[34]

1. are contributions irrevocably made by a contractor on behalf of an employee to a financially responsible trustee, third person, fund, plan, or program;

2. are legally enforceable;

3. have been communicated in writing to the employee; and

4. are made available to the employee once all eligibility requirements are met.

E. No credit shall be allowed for benefits required by federal, state or local law, such as but not limited to: worker's compensation, unemployment compensation, and social security contributions.[35]

F. A contractor that is obligated to deposit fringe benefit contributions on behalf of its employees into a financially responsible trustee, third person, fund, plan, or program and fails to make timely contributions is guilty of a gross misdemeanor[36] or other violations under federal law. A contractor found in violation shall compel MnDOT to take such actions as prescribed in section **XVI (NON-COMPLIANCE AND ENFORCEMENT).**

VII. OVERTIME

A. A contractor shall not permit or require a worker to work longer than the prevailing hours of labor unless the worker is paid for all hours in excess of the prevailing hours at a rate of at least one and a half (1 ½) times the hourly basic rate of pay. [37] The prevailing hours of labor is defined as not more than 8 hours per day or more than 40 hours per week.[38]

B. To calculate the worker's minimum overtime hourly rate: (1) multiply the contract classification's hourly basic rate by 1.5, then (2) add the contract fringe rate, and finally (3) subtract the worker's bona fide hourly fringe benefit costs incurred by the Contractor.

C. Contractors subject to the Federal Fair Labor Standards Act may be subject to additional overtime compensation requirements.

VIII. LABOR CLASSIFICATIONS

A. All contractors must refer to the state wage determinations incorporated into the contract to obtain an applicable job classification.

B. All contractors must refer to the Minnesota Rules to determine an appropriate classification of labor based on the tasks performed by a worker on the project.[39] If a contractor cannot determine an appropriate job classification, state law requires that the employer assign the worker to a job classification that is the "same or most similar".[40]

C. Contractors needing assistance in determining a classification of labor must contact the MnDOT LCU for instructions. Determinations and/or disputes concerning the assignment of labor classifications or wage rates fall under MnDLI's statutory authority.

IX. INDEPENDENT CONTRACTORS, OWNERS, SUPERVISORS, AND FOREMAN

A. An independent contractor performing work as a laborer or mechanic is subject to the contract prevailing wage requirements[41] for the classification of work performed and shall adhere to the

[34] Minnesota Statute 177.42, Subdivision 6
[35] Minnesota Statute 177.42, Subdivision 6
[36] Minnesota Statute 181.74, Subdivision 1
[37] Minnesota Statute 177.44, Subdivision 1
[38] Minnesota Statute 177.42, Subdivision 4
[39] Minnesota Rules 5200.1101 and 5200.1102
[40] Minnesota Statute 177.44, Subdivision 1
[41] 29 CFR Part 5.2(o) and Minnesota Statute 177.41

requirements established in sections **IV (PAYROLLS AND STATEMENTS); V (WAGE RATES); VI (FRINGE BENEFITS); VII (OVERTIME) and VIII (LABOR CLASSIFICATIONS)**.

B. Pursuant to state regulations, owners, supervisors, and foreman performing the work of a laborer or mechanic[42] under the contract[43] are considered workers and shall be compensated in accordance with section **V (WAGE RATES)**. Furthermore, the prime contractor and any subcontractor shall adhere to the requirements established in sections **IV (PAYROLLS AND STATEMENTS); VI (FRINGE BENEFITS); VII (OVERTIME); and VIII (LABOR CLASSIFICATIONS)**.

X. APPRENTICES, TRAINEES AND HELPERS

A. An apprentice is not subject to the state wage decision(s) incorporated into the contract, provided the contractor can demonstrate compliance with the following: [44]

1. The apprentice is performing the work of his/her trade.

2. The apprentice is registered with the U.S. DOL Bureau of Apprenticeship and Training or MnDLI Division of Voluntary Apprenticeship.

3. The apprentice is compensated according to the rate specified in the program for the level of progress.

4. The employer's ratio of apprentices to journeyman workers on the project is not greater than the ratio permitted for the employer's entire work force under the registered program.[45]

B. If a contractor fails to demonstrate compliance with the terms established in **Subpart A (1 – 4)** of this section, the contractor shall compensate the worker not less than the applicable total prevailing wage rate for the actual classification of labor performed.[46]

C. A trainee or helper is not exempt under state law; the contractor shall assign the trainee or helper a job classification that is the "same or most similar"[47] and compensate the trainee or helper for the actual work performed regardless of the trainee's or helper's skill level.

XI. SUBCONTRACTING PART OF THIS CONTRACT

A. The prime contractor shall execute a written subcontract with each first tier subcontractor performing work under this contract that includes the Special Provisions Division A - LABOR, contract wage determinations, and truck rental rate decisions. First tier subcontractors acquiring the services of a second tier subcontractor are subject to the same requirements.

XII. POSTER BOARDS

A. The prime contractor must construct and display a poster board, which contains all required posters, is complete, accurate, legible, and accessible to all project workers from the first day of work until the project is one hundred percent (100%) complete.[48] Placement of a poster board at an off-site location does not satisfy this requirement.

B. The prime contractor can obtain the required posters by visiting the MnDOT LCU website. The prime contractor will need to furnish its name, mailing address, the type of posters (i.e., state-aid), and the quantity needed.

C. Refer to the poster board section of the MnDOT LCU website to obtain applicable contact information for each poster.

---

[42] Minnesota Rules 5200.1106, Subpart 5A
[43] Minnesota Statute 177.44, Subdivision 1
[44] Minnesota Rules 5200.1070
[45] MnDLI Division of Apprenticeship – April 6, 1995 Memorandum from Jerry Briggs, Director
[46] Minnesota Rules 5200.1070, Subpart 3
[47] Minnesota Statute 177.44, Subdivision 1
[48] Minnesota Statute 177.44, Subdivision 5

XIII. EMPLOYEE INTERVIEWS

A. At any time, the prime contractor shall permit representatives from MnDLI or MnDOT to interview its workers, and those of any subcontractor, during working hours on the project.[49]

XIV. TRUCKING / OFF-SITE FACILITIES

A. The prime contractor shall assume responsibility for ensuring its workers, and those of all subcontractors, are compensated in accordance with the state wage determination(s) incorporated into this contract for the following work:

1. processing or manufacturing of material, including the hauling of material to and from a prime contractor's material operation that is not a separately held commercial establishment;[50]

2. processing or manufacturing of material, including the hauling of material to and from an off-site material operation that is not considered a commercial establishment;[51]

3. hauling of any or all stockpiled or excavated materials on the project work site to other locations on the same project even if the truck leaves the work site at some point;[52]

4. delivery of materials from a non-commercial establishment to the project and the return haul;[53]

5. delivery of materials from another construction project site to the public works project and the return haul, either empty or loaded. Construction projects are not considered commercial establishments;[54]

6. hauling required to remove materials from the project to a location off the project site and the return haul, either empty or loaded from other than a commercial establishment;[55] and

7. delivery of mineral aggregate materials from a commercial establishment, which is deposited "substantially in place", and the return haul either empty or loaded.[56]

B. The work duties prescribed in **Subpart A (1 - 7)** of this section do not represent all possible hauling activities and/or other work duties that may be performed under this contract. It is the responsibility of the prime contractor and all subcontractors to be informed about all-applicable job duties that may be subject to the contract labor provisions.

C. A contractor acquiring trucking services from an ITO, MTO, and/or Truck Broker to perform and/or provide "covered" hauling activities shall comply with the payment of the certified state truck rental rates.[57]

D. Truck hires must be paid the truck rental rate for time spent repairing or maintaining equipment; and for waiting to load or unload (so long as the wait, repair or maintenance, is attributable to the fault of the broker, contractor, or agent and/or employees thereof).[58]

E. Prime contractors and subcontractors shall submit, for each month where hauling activities were performed under this contract, a **MnDOT, TP-90550 - Month-End Trucking Report** and **MN/DOT, TP-90551 – Month-end Trucking Statement of Compliance Form**, along with each ITOs, MTOs and/or Truck Brokers reports to MnDOT.[59] The specifications regarding the dates for submission can be found near the bottom of the **MN/DOT, TP-90551 - Statement of Compliance Form.**

[49] MN/DOT Standard Specifications for Construction, Section 1511
[50] ALJ Findings of Fact, Conclusions of Law, and Recommendation, Conclusions (7), Case #12-3000-11993-2
[51] Minnesota Rules 5200.1106, Subpart 3B(2)
[52] Minnesota Rules 5200.1106, Subpart 3B(1)
[53] Minnesota Rules 5200.1106, Subpart 3B(2)
[54] Minnesota Rules 5200.1106, Subpart 3B(3)
[55] Minnesota Rules 5200.1106, Subpart 3B(4)
[56] Minnesota Rules 5200.1106, Subpart 3B(5)(6)
[57] Minnesota Rules 5200.1106, Subpart 1
[58] Minnesota Rules 5200.1106, Subpart 8(A)(1)
[59] Minnesota Rules 5200.1106, Subpart 10

F. A truck broker contracting to provide trucking services directly to a prime contractor or subcontractor is allowed to assess a, broker fee.[60] No other lower tier broker fees against the truck rental rate will be permitted. In addition, the prime contractor and any subcontractor contracting to receive trucking services must, at a minimum, pay the full contract truck rental rate.

G. A contractor may not accept a rebate for the purpose of reducing or otherwise decreasing the value of the compensation paid to a hired Independent Truck Owner/Operator (ITO) or Multiple Truck Owner (MTO).[61]

H. A contractor with employee truck drivers shall adhere to the requirements established in sections **IV (PAYROLLS AND STATEMENTS); V (WAGE RATES); VI (FRINGE BENEFITS); VII (OVERTIME); and VIII (LABOR CLASSIFICATIONS).**

I. If, after written notice, the prime contractor fails to submit its month-end trucking reports and certification forms and those of any subcontractor, MTO and/or Truck Broker, MnDOT may take such actions as prescribed in section **XVI (NON-COMPLIANCE AND ENFORCEMENT).**

XV. CHILD LABOR

A. Except as permitted under **Subpart B** of this section, no worker under the age of 18 is allowed to perform work on construction projects.[62]

B. In accordance with state law, a worker under the age of 18, employed in a corporation totally owned by one or both parents that is supervised by the parent(s), may perform work on construction projects.[63] However, if this contractor is subject to the federal Fair Labor Standards Act, a worker under the age of 18 is not allowed to perform work in a hazardous occupation.[64]

C. The project engineer may remove a worker that appears to be under the age of 18 from the construction project until the contractor or worker can demonstrate proof of age[65] and compliance with all applicable federal and state regulations.[66]

XVI. NON-COMPLIANCE AND ENFORCEMENT

A. The prime contractor shall be liable for any unpaid wages to its workers or those of any subcontractor, agent, ITO, MTO, and/or Truck Broker.[67]

B. If it is determined that a contractor has violated the state prevailing wage law, or any portion of this contract, MnDOT may, after written notice, implement one or more of the following:

1. withhold or cause to be withheld from the prime contractor such amounts in considerations of charges or assessments against the prime contractor, whether arising from this contract or other contract with MnDOT;[68]

2. reject a bid from a prime contractor that has demonstrated continued or persistent noncompliance with the prevailing wage law on previous or current contracts with MnDOT;

3. take the prosecution of the work out of the hands of the prime contractor, place the contractor in default and terminate the contractor for failure to demonstrate compliance with these provisions;[69]

4. refer the matter to the Minnesota Department of Administration for suspension or debarment proceedings;[70] and/or

[60] Minnesota Rules 5200.1106, Subpart 7(C)
[61] Minnesota Rules 5200.1106, Subpart 6
[62] Minnesota Rules 5200.0910, Subpart F
[63] Minnesota Rules 5200.0930, Subpart 4
[64] 29 CFR Part 570.2(a)(ii)
[65] Minnesota Statute 181A.06, Subdivision 4
[66] MN/DOT Standard Specifications for Construction, Section 1701
[67] MN/DOT Standard Specifications for Construction, Section 1801
[68] MN/DOT Standard Specifications for Construction, Section 1906
[69] MN/DOT Standard Specifications for Construction, Section 1808

5. consider referring violations to the appropriate local County Attorney for prosecution.[71]

C. Any contractor who violates the state prevailing wage law is guilty of a misdemeanor and may be fined not more than $300 or imprisoned not more than 90 days or both. Each day that the violation continues is a separate offense.[72]

D. A contractor may be fined up to $1,000 for each failure to maintain records.[73]

E. All required documents and certification reports are legal documents; willful falsification of the documents may result in civil action and/or criminal prosecution[74] and may be grounds for debarment proceedings.[75]

F. For contracts subject to Minnesota Statutes section 177.43, the Commissioner of MnDLI may issue compliance orders for willful violation of the section. If the employer is found to have committed a violation, liquidated damages and other costs may be assessed against the employer.

F. An employee may pursue a civil action in district court against its employer for failure to comply with the proper payment of wages.[76] If the employer is found to have committed a violation, liquidated damages and other costs may be assessed against the employer.[77]

[70] Minnesota Rules 1230.1150, Subpart 2(A)(4)
[71] Minnesota Statute 177.44, Subdivision 7
[72] Minnesota Statute 177.44, Subdivision 6
[73] Minnesota Statute 177.30(b)
[74] Minnesota Statutes 16B, 161.315 - Subdivision 2, 177.32 - Subdivision 1(4), 177.43 - Subdivision 5, 177.44 - Subdivision 6, 609.63
[75] Minnesota Statute 161.315 and Minnesota Statute 609.63
[76] Minnesota Statute 177.27, Subdivision 8
[77] Minnesota Statute 177.27, Subdivision 10

2. The department may reject a bid from a prime contractor that has demonstrated continued or persistent noncompliance with the prevailing wage law on previous or current contracts with the department.[70]

3. The department may take the prosecution of the work out of the hands of the prime contractor, place the contractor in default and terminate this contract for failure to demonstrate compliance with these provisions.[71]

C. Any contractor who violates the state prevailing wage law is guilty of a misdemeanor and may be fined not more than $300 or imprisoned not more than 90 days or both. Each day that the violation continues is a separate offense.[72]

D. All required documents and certification reports are legal documents; willful falsification of the documents may result in civil action and/or criminal prosecution[73] and may be grounds for debarment proceedings.[74]

[70] Minnesota Statute 161.32, Subdivision 1(d)
[71] MN/DOT Standard Specifications for Construction, Section 1808
[72] Minnesota Statute 177.44, Subdivision 6
[73] Minnesota Statutes 16B, 161.315, Subdivision 2, 177.43,Subdivision 5 177.44, Subdivision 6, 609.63
[74] Minnesota Statute 161.315 and Minnesota Statute 609.63

Prompt Payment
December 2002

NOTICE TO BIDDERS

Minnesota Statutes that require prompt payment to subcontractors:

16A.1245 Prompt payment to subcontractors.

Each state agency contract must require the prime contractor to pay any subcontractor within ten days of the prime contractor's receipt of payment from the state for undisputed services provided by the subcontractor. The contract must require the prime contractor to pay interest of 1-1/2 percent per month or any part of a month to the subcontractor on any undisputed amount not paid on time to the subcontractor. The minimum monthly interest penalty payment for an unpaid balance of $100 or more is $10. For an unpaid balance of less than $100, the prime contractor shall pay the actual penalty due to the subcontractor. A subcontractor who prevails in a civil action to collect interest penalties from a prime contractor must be awarded its costs and disbursements, including attorney's fees, incurred in bringing the action.

HIST: 1990 c 541 s 1

337.10 Building and construction contracts; prohibited provisions.

Subd. 3. Prompt payment to subcontractors. A building and construction contract shall be deemed to require the prime contractor and all subcontractors to promptly pay any subcontractor or material supplier contract within ten days of receipt by the party responsible for payment of payment for undisputed services provided by the party requesting payment. The contract shall be deemed to require the party responsible for payment to pay interest of 1-1/2 percent per month to the party requesting payment on any undisputed amount not paid on time. The minimum monthly interest penalty payment for an unpaid balance of $100 or more is $10. For an unpaid balance of less than $100, the party responsible for payment shall pay the actual penalty due to the party requesting payment. A party requesting payment who prevails in a civil action to collect interest penalties from a party responsible for payment must be awarded its costs and disbursements, including attorney fees incurred in bringing the action. This subdivision does not apply to construction of or improvements to residential real estate as defined in section 326.83, subdivision 17, or to construction of or improvements to attached single-family dwellings, if those dwellings are used for residential purposes and have fewer than 13 units per structure.

HIST: 1997 c 127 s 1; 1998 c 289 s 1,2; 1999 c 116 s 2

MINNESOTA DEPARTMENT OF LABOR AND INDUSTRY PREVAILING WAGES FOR STATE FUNDED CONSTRUCTION PROJECTS

THIS NOTICE MUST BE POSTED ON THE JOBSITE IN A CONSPICUOUS PLACE

Construction Type: Highway and Heavy

Region Number: 09

Counties within region:

- ANOKA-02
- CARVER-10
- CHISAGO-13
- DAKOTA-19
- HENNEPIN-27
- RAMSEY-62
- SCOTT-70
- WASHINGTON-82

Effective: 2013-10-28 Revised: 2013-12-06

This project is covered by Minnesota prevailing wage statutes. Wage rates listed below are the minimum hourly rates to be paid on this project.

All hours worked in excess of eight (8) hours per day or forty (40) hours per week shall be paid at a rate of one and one half (1 1/2) times the basic hourly rate.

Violations should be reported to:

Department of Transportation
Office of Construction
Transportation Building MS650
John Ireland Blvd
St. Paul, MN 55155
(651) 366-4209

Refer questions concerning the prevailing wage rates to:

Department of Labor and Industry
Prevailing Wage Section
443 Lafayette Road N
St Paul, MN 55155
(651) 284-5091
DLI.PrevWage@state.mn.us

LABOR CODE AND CLASS	EFFECT DATE	BASIC RATE	FRINGE RATE	TOTAL RATE
LABORERS (101 - 112) (SPECIAL CRAFTS 701 - 730)				
101 LABORER, COMMON (GENERAL LABOR WORK)	2013-10-28	26.77	16.02	42.79
	2014-05-01	27.27	16.50	43.77
102 LABORER, SKILLED (ASSISTING SKILLED CRAFT JOURNEYMAN)	2013-10-28	26.77	16.02	42.79

LABOR CODE AND CLASS	EFFECT DATE	BASIC RATE	FRINGE RATE	TOTAL RATE
	2014-05-01	27.27	16.50	43.77
103 LABORER, LANDSCAPING (GARDENER, SOD LAYER AND NURSERY OPERATOR)	2013-10-28	18.00	12.43	30.43
104 FLAG PERSON	2013-10-28	26.77	16.02	42.79
	2014-05-01	27.27	16.50	43.77
105 WATCH PERSON	2013-10-28	23.37	15.47	38.84
	2014-05-01	23.87	15.95	39.82
106 BLASTER	2013-10-28	29.77	16.02	45.79
	2014-05-01	30.27	16.50	46.77
107 PIPELAYER (WATER, SEWER AND GAS)	2013-10-28	28.77	16.02	44.79
	2014-05-01	29.27	16.50	45.77
108 TUNNEL MINER	2013-10-28	27.47	16.02	43.49
	2014-05-01	27.97	16.50	44.47
109 UNDERGROUND AND OPEN DITCH LABORER (EIGHT FEET BELOW STARTING GRADE LEVEL)	2013-10-28	27.47	16.02	43.49
	2014-05-01	27.97	16.50	44.47
110 SURVEY FIELD TECHNICIAN (OPERATE TOTAL STATION, GPS RECEIVER, LEVEL, ROD OR RANGE POLES, STEEL TAPE MEASUREMENT; MARK AND DRIVE STAKES; HAND OR POWER DIGGING FOR AND IDENTIFICATION OF MARKERS OR MONUMENTS; PERFORM AND CHECK CALCULATIONS; REVIEW AND UNDERSTAND CONSTRUCTION PLANS AND LAND SURVEY MATERIALS). THIS CLASSIFICATION DOES NOT APPLY TO THE WORK PERFORMED ON A PREVAILING WAGE PROJECT BY A LAND SURVEYOR WHO IS LICENSED PURSUANT TO MINNESOTA STATUTES, SECTIONS 326.02 TO 326.15.	2013-10-28	26.77	16.02	42.79
	2014-05-01	27.27	16.50	43.77
111 TRAFFIC CONTROL PERSON (TEMPORARY SIGNAGE)	2013-10-28	26.77	16.02	42.79
	2014-05-01	27.27	16.50	43.77
112 QUALITY CONTROL TESTER (FIELD AND COVERED OFF-SITE FACILITIES; TESTING OF AGGREGATE, ASPHALT, AND CONCRETE MATERIALS); LIMITED TO MN DOT HIGHWAY AND HEAVY CONSTRUCTION PROJECTS WHERE THE MN DOT HAS RETAINED QUALITY ASSURANCE PROFESSIONALS TO REVIEW AND INTERPRET THE RESULTS OF QUALITY CONTROL TESTERS. SERVICES PROVIDED BY THE CONTRACTOR.	2013-10-28	16.28	4.07	20.35
SPECIAL EQUIPMENT (201 - 204)				
201 ARTICULATED HAULER	2013-10-28	31.37	16.70	48.07
	2014-05-01	31.77	17.20	48.97
202 BOOM TRUCK	2013-10-28	31.37	16.70	48.07

LABOR CODE AND CLASS	EFFECT DATE	BASIC RATE	FRINGE RATE	TOTAL RATE
	2014-05-01	31.77	17.20	48.97
203 LANDSCAPING EQUIPMENT, INCLUDES HYDRO SEEDER OR MULCHER, SOD ROLLER, FARM TRACTOR WITH ATTACHMENT SPECIFICALLY SEEDING, SODDING, OR PLANT, AND TWO-FRAMED FORKLIFT (EXCLUDING FRONT, POSIT-TRACK, AND SKID STEER LOADERS), NO EARTHWORK OR GRADING FOR ELEVATIONS	2013-10-28	27.12	16.70	43.82
	2014-05-01	27.52	17.20	44.72
204 OFF-ROAD TRUCK	2013-10-28	31.37	16.70	48.07
	2014-05-01	31.77	17.20	48.97
205 PAVEMENT MARKING OR MARKING REMOVAL EQUIPMENT (ONE OR TWO PERSON OPERATORS); SELF-PROPELLED TRUCK OR TRAILER MOUNTED UNITS.	2013-10-28	30.45	17.45	47.90
HIGHWAY/HEAVY POWER EQUIPMENT OPERATOR				
GROUP 2	2013-10-28	32.22	16.70	48.92
	2014-05-01	32.62	17.20	49.82
302 HELICOPTER PILOT (HIGHWAY AND HEAVY ONLY)				
303 CONCRETE PUMP (HIGHWAY AND HEAVY ONLY)				
304 ALL CRANES WITH OVER 135-FOOT BOOM, EXCLUDING JIB (HIGHWAY AND HEAVY ONLY)				
305 DRAGLINE, CRAWLER, HYDRAULIC BACKHOE (TRACK OR WHEEL MOUNTED) AND/OR OTHER SIMILAR EQUIPMENT WITH SHOVEL-TYPE CONTROLS THREE CUBIC YARDS AND OVER MANUFACTURER.S RATED CAPACITY INCLUDING ALL ATTACHMENTS. (HIGHWAY AND HEAVY ONLY)				
306 GRADER OR MOTOR PATROL				
307 PILE DRIVING (HIGHWAY AND HEAVY ONLY)				
308 TUGBOAT 100 H.P. AND OVER WHEN LICENSE REQUIRED (HIGHWAY AND HEAVY ONLY)				
GROUP 3	2013-10-28	31.67	16.70	48.37
	2014-05-01	32.07	17.20	49.27
309 ASPHALT BITUMINOUS STABILIZER PLANT				
310 CABLEWAY				
311 CONCRETE MIXER, STATIONARY PLANT (HIGHWAY AND HEAVY ONLY)				
312 DERRICK (GUY OR STIFFLEG)(POWER)(SKIDS OR STATIONARY) (HIGHWAY AND HEAVY ONLY)				
313 DRAGLINE, CRAWLER, HYDRAULIC BACKHOE (TRACK OR WHEEL MOUNTED) AND/OR SIMILAR EQUIPMENT WITH SHOVEL-TYPE CONTROLS, UP TO THREE CUBIC YARDS MANUFACTURER.S RATED CAPACITY INCLUDING ALL ATTACHMENTS (HIGHWAY AND HEAVY ONLY)				
314 DREDGE OR ENGINEERS, DREDGE (POWER) AND ENGINEER				
315 FRONT END LOADER, FIVE CUBIC YARDS AND OVER INCLUDING ATTACHMENTS. (HIGHWAY AND HEAVY ONLY)				
316 LOCOMOTIVE CRANE OPERATOR				
317 MIXER (PAVING) CONCRETE PAVING, ROAD MOLE, INCLUDING MUCKING OPERATIONS, CONWAY OR SIMILAR TYPE				
318 MECHANIC . WELDER ON POWER EQUIPMENT (HIGHWAY AND HEAVY ONLY)				
319 TRACTOR . BOOM TYPE (HIGHWAY AND HEAVY ONLY)				
320 TANDEM SCRAPER				
321 TRUCK CRANE . CRAWLER CRANE (HIGHWAY AND HEAVY ONLY)				
322 TUGBOAT 100 H.P AND OVER (HIGHWAY AND HEAVY ONLY)				
GROUP 4	2013-10-28	31.37	16.70	48.07
	2014-05-01	31.77	17.20	48.97

LABOR CODE AND CLASS	EFFECT DATE	BASIC RATE	FRINGE RATE	TOTAL RATE
323 AIR TRACK ROCK DRILL				
324 AUTOMATIC ROAD MACHINE (CMI OR SIMILAR) (HIGHWAY AND HEAVY ONLY)				
325 BACKFILLER OPERATOR				
326 CONCRETE BATCH PLANT OPERATOR (HIGHWAY AND HEAVY ONLY)				
327 BITUMINOUS ROLLERS, RUBBER TIRED OR STEEL DRUMMED (EIGHT TONS AND OVER)				
328 BITUMINOUS SPREADER AND FINISHING MACHINES (POWER), INCLUDING PAVERS, MACRO SURFACING AND MICRO SURFACING, OR SIMILAR TYPES (OPERATOR AND SCREED PERSON)				
329 BROKK OR R.T.C. REMOTE CONTROL OR SIMILAR TYPE WITH ALL ATTACHMENTS				
330 CAT CHALLENGER TRACTORS OR SIMILAR TYPES PULLING ROCK WAGONS, BULLDOZERS AND SCRAPERS				
331 CHIP HARVESTER AND TREE CUTTER				
332 CONCRETE DISTRIBUTOR AND SPREADER FINISHING MACHINE, LONGITUDINAL FLOAT, JOINT MACHINE, AND SPRAY MACHINE				
333 CONCRETE MIXER ON JOBSITE (HIGHWAY AND HEAVY ONLY)				
334 CONCRETE MOBIL (HIGHWAY AND HEAVY ONLY)				
335 CRUSHING PLANT (GRAVEL AND STONE) OR GRAVEL WASHING, CRUSHING AND SCREENING PLANT				
336 CURB MACHINE				
337 DIRECTIONAL BORING MACHINE				
338 DOPE MACHINE (PIPELINE)				
339 DRILL RIGS, HEAVY ROTARY OR CHURN OR CABLE DRILL (HIGHWAY AND HEAVY ONLY)				
340 DUAL TRACTOR				
341 ELEVATING GRADER				
342 FORK LIFT OR STRADDLE CARRIER (HIGHWAY AND HEAVY ONLY)				
343 FORK LIFT OR LUMBER STACKER (HIGHWAY AND HEAVY ONLY)				
344 FRONT END, SKID STEER OVER 1 TO 5 C YD				
345 GPS REMOTE OPERATING OF EQUIPMENT				
346 HOIST ENGINEER (POWER) (HIGHWAY AND HEAVY ONLY)				
347 HYDRAULIC TREE PLANTER				
348 LAUNCHER PERSON (TANKER PERSON OR PILOT LICENSE)				
349 LOCOMOTIVE (HIGHWAY AND HEAVY ONLY)				
350 MILLING, GRINDING, PLANNING, FINE GRADE, OR TRIMMER MACHINE				
351 MULTIPLE MACHINES, SUCH AS AIR COMPRESSORS, WELDING MACHINES, GENERATORS, PUMPS (HIGHWAY AND HEAVY ONLY)				
352 PAVEMENT BREAKER OR TAMPING MACHINE (POWER DRIVEN) MIGHTY MITE OR SIMILAR TYPE				
353 PICKUP SWEEPER, ONE CUBIC YARD AND OVER HOPPER CAPACITY(HIGHWAY AND HEAVY ONLY)				
354 PIPELINE WRAPPING, CLEANING OR BENDING MACHINE				
355 POWER PLANT ENGINEER, 100 KWH AND OVER (HIGHWAY AND HEAVY ONLY)				
356 POWER ACTUATED HORIZONTAL BORING MACHINE, OVER SIX INCHES				
357 PUGMILL				
358 PUMPCRETE (HIGHWAY AND HEAVY ONLY)				
359 RUBBER-TIRED FARM TRACTOR WITH BACKHOE INCLUDING ATTACHMENTS (HIGHWAY AND HEAVY ONLY)				
360 SCRAPER				
361 SELF-PROPELLED SOIL STABILIZER				
362 SLIP FORM (POWER DRIVEN) (PAVING)				
363 TIE TAMPER AND BALLAST MACHINE				
364 TRACTOR, BULLDOZER (HIGHWAY AND HEAVY ONLY)				
365 TRACTOR, WHEEL TYPE, OVER 50 H.P. WITH PTO UNRELATED TO LANDSCAPING (HIGHWAY AND HEAVY ONLY)				
366 TRENCHING MACHINE (SEWER, WATER, GAS) EXCLUDES WALK BEHIND TRENCHER (HIGHWAY AND HEAVY ONLY)				
367 TUB GRINDER, MORBARK, OR SIMILAR TYPE				
368 WELL POINT DISMANTLING OR INSTALLATION (HIGHWAY AND HEAVY ONLY)				
GROUP 5	2013-10-28	28.33	16.70	45.03
	2014-05-01	28.73	17.20	45.93

LABOR CODE AND CLASS	EFFECT DATE	BASIC RATE	FRINGE RATE	TOTAL RATE
369 AIR COMPRESSOR, 600 CFM OR OVER (HIGHWAY AND HEAVY ONLY)				
370 BITUMINOUS ROLLER (UNDER EIGHT TONS)				
371 CONCRETE SAW (MULTIPLE BLADE) (POWER OPERATED)				
372 FORM TRENCH DIGGER (POWER)				
373 FRONT END, SKID STEER UP TO 1C YD				
374 GUNITE GUNALL (HIGHWAY AND HEAVY ONLY)				
375 HYDRAULIC LOG SPLITTER				
376 LOADER (BARBER GREENE OR SIMILAR TYPE)				
377 POST HOLE DRIVING MACHINE/POST HOLE AUGER				
378 POWER ACTUATED AUGER AND BORING MACHINE				
379 POWER ACTUATED JACK				
380 PUMP (HIGHWAY AND HEAVY ONLY)				
381 SELF-PROPELLED CHIP SPREADER (FLAHERTY OR SIMILAR)				
382 SHEEP FOOT COMPACTOR WITH BLADE . 200 H.P. AND OVER				
383 SHOULDERING MACHINE (POWER) APSCO OR SIMILAR TYPE INCLUDING SELF-PROPELLED SAND AND CHIP SPREADER				
384 STUMP CHIPPER AND TREE CHIPPER				
385 TREE FARMER (MACHINE)				
GROUP 6	2013-10-28	27.12	16.70	43.82
	2014-05-01	27.52	17.20	44.72
387 CAT, CHALLENGER, OR SIMILAR TYPE OF TRACTORS, WHEN PULLING DISK OR ROLLER				
388 CONVEYOR (HIGHWAY AND HEAVY ONLY)				
389 DREDGE DECK HAND				
390 FIRE PERSON OR TANK CAR HEATER (HIGHWAY AND HEAVY ONLY)				
391 GRAVEL SCREENING PLANT (PORTABLE NOT CRUSHING OR WASHING)				
392 GREASER (TRACTOR) (HIGHWAY AND HEAVY ONLY)				
393 LEVER PERSON				
394 OILER (POWER SHOVEL, CRANE, TRUCK CRANE, DRAGLINE, CRUSHERS, AND MILLING MACHINES, OR OTHER SIMILAR HEAVY EQUIPMENT) (HIGHWAY AND HEAVY ONLY)				
395 POWER SWEEPER				
396 SHEEP FOOT ROLLER AND ROLLERS ON GRAVEL COMPACTION, INCLUDING VIBRATING ROLLERS				
397 TRACTOR, WHEEL TYPE, OVER 50 H.P., UNRELATED TO LANDSCAPING				
TRUCK DRIVERS				
GROUP 1	2013-10-28	27.25	14.40	41.65
601 MECHANIC . WELDER				
602 TRACTOR TRAILER DRIVER				
603 TRUCK DRIVER (HAULING MACHINERY INCLUDING OPERATION OF HAND AND POWER OPERATED WINCHES)				
GROUP 2	2013-10-28	26.70	14.40	41.10
604 FOUR OR MORE AXLE UNIT, STRAIGHT BODY TRUCK				
GROUP 3	2013-10-28	26.60	14.40	41.00
605 BITUMINOUS DISTRIBUTOR DRIVER				
606 BITUMINOUS DISTRIBUTOR (ONE PERSON OPERATION)				
607 THREE AXLE UNITS				
GROUP 4	2013-10-28	26.35	14.40	40.75
608 BITUMINOUS DISTRIBUTOR SPRAY OPERATOR (REAR AND OILER)				
609 DUMP PERSON				

LABOR CODE AND CLASS	EFFECT DATE	BASIC RATE	FRINGE RATE	TOTAL RATE
610 GREASER				
611 PILOT CAR DRIVER				
612 RUBBER-TIRED, SELF-PROPELLED PACKER UNDER 8 TONS				
613 TWO AXLE UNIT				
614 SLURRY OPERATOR				
615 TANK TRUCK HELPER (GAS, OIL, ROAD OIL, AND WATER)				
616 TRACTOR OPERATOR, UNDER 50 H.P.				
SPECIAL CRAFTS				
701 HEATING AND FROST INSULATORS	2013-10-28	41.17	19.06	60.23
	2014-06-01	42.07	19.06	61.13
702 BOILERMAKERS	2013-10-28	32.40	25.37	57.77
703 BRICKLAYERS	2013-10-28	32.24	18.63	50.87
704 CARPENTERS	2013-10-28	32.49	18.08	50.57
705 CARPET LAYERS (LINOLEUM)	FOR RATE CALL 651-284-5091 OR EMAIL DLI.PREVWAGE@STATE.MN.US			
706 CEMENT MASONS	2013-10-28	33.05	17.00	50.05
707 ELECTRICIANS	2013-10-28	37.19	23.92	61.11
	2014-05-01	37.86	24.75	62.61
708 ELEVATOR CONSTRUCTORS	FOR RATE CALL 651-284-5091 OR EMAIL DLI.PREVWAGE@STATE.MN.US			
709 GLAZIERS	FOR RATE CALL 651-284-5091 OR EMAIL DLI.PREVWAGE@STATE.MN.US			
710 LATHERS	FOR RATE CALL 651-284-5091 OR EMAIL DLI.PREVWAGE@STATE.MN.US			
711 GROUND PERSON	2013-10-28	25.74	12.21	37.95
712 IRONWORKERS	2013-10-28	34.15	21.20	55.35
713 LINEMAN	2013-10-28	38.42	15.76	54.18
714 MILLWRIGHT	2013-10-28	30.52	20.84	51.36
715 PAINTERS (INCLUDING HAND BRUSHED, HAND SPRAYED, AND THE TAPING OF PAVEMENT MARKINGS)	2013-10-28	32.04	18.26	50.30
716 PILEDRIVER (INCLUDING VIBRATORY DRIVER OR EXTRACTOR FOR PILING AND SHEETING OPERATIONS)	2013-10-28	32.49	18.08	50.57
717 PIPEFITTERS . STEAMFITTERS	2013-10-28	37.72	26.32	64.04
	2014-05-01	39.07	26.32	65.39

LABOR CODE AND CLASS	EFFECT DATE	BASIC RATE	FRINGE RATE	TOTAL RATE
718 PLASTERERS	FOR RATE CALL 651-284-5091 OR EMAIL DLI.PREVWAGE@STATE.MN.US			
719 PLUMBERS	2013-10-28	34.83	25.87	60.70
	2014-05-01	35.98	25.87	61.85
720 ROOFER	FOR RATE CALL 651-284-5091 OR EMAIL DLI.PREVWAGE@STATE.MN.US			
721 SHEET METAL WORKERS	2013-10-28	38.79	21.56	60.35
722 SPRINKLER FITTERS	FOR RATE CALL 651-284-5091 OR EMAIL DLI.PREVWAGE@STATE.MN.US			
723 TERRAZZO WORKERS	FOR RATE CALL 651-284-5091 OR EMAIL DLI.PREVWAGE@STATE.MN.US			
724 TILE SETTERS	2013-10-28	27.96	19.30	47.26
725 TILE FINISHERS	FOR RATE CALL 651-284-5091 OR EMAIL DLI.PREVWAGE@STATE.MN.US			
726 DRYWALL TAPER	2013-10-28	29.97	19.23	49.20
	2014-05-01	30.62	19.23	49.85
727 WIRING SYSTEM TECHNICIAN	2013-10-28	34.16	12.31	46.47
	2014-07-01	35.24	12.31	47.55
728 WIRING SYSTEMS INSTALLER	2013-10-28	23.91	10.27	34.18
	2014-07-01	24.67	10.27	34.94
729 ASBESTOS ABATEMENT WORKER	2013-10-28	27.53	15.34	42.87
730 SIGN ERECTOR	FOR RATE CALL 651-284-5091 OR EMAIL DLI.PREVWAGE@STATE.MN.US			

DEPARTMENT OF LABOR AND INDUSTRY **May 1, 2012**
LABOR STANDARDS UNIT

NOTICE OF CERTIFICATION OF TRUCK RENTAL RATES AND EFFECTIVE DATE PURSUANT TO MINNESOTA RULES, PART 5200.1105

On May 1, 2012, the Commissioner of the Department of Labor and Industry ("DLI") certified the minimum truck rental rates for highway projects in the state's ten highway and heavy construction areas for trucks and drivers operating "four or more axle units, straight body trucks," "three axle units," "tractor only" and "tractor trailers." The certification followed publication of the Notice of Determination of Truck Rental Rates in the *State Register* on March 12, 2012, and the informal conference held pursuant to Minnesota Rules, part 5200.1105 on April 4, 2012.

According to Minnesota Rules, part 5200.1105, the purpose of the informal conference is for DLI to obtain further input regarding the proposed rates before the rates are certified. Approximately 18 individuals attended the informal conference. Many of the attendees voiced strong concerns regarding the inadequacy of the proposed rates. Among the concerns raised was the fact that the proposed rates were based on 2010 costs, including the 2010 price of fuel. Speakers indicated that because of the dramatic increase in the price of diesel in recent months, the published rates were far below the operators' current costs. As stated by some attendees:

> "This year, right now yesterday we were paying $4.10...I know when fuel went up that last time, a lot of us had to eat the cost because there was no way of recouping it."
>
> Testimony of Colleen Donovan, Transcript of Informal Conference, pp. 13, 14.

Ms. Donavan provided DLI written information that her 2010 average cost for fuel was $2.99 per gallon.

> "And, like the price of fuel, $4.25, $4.30. That's what it is down by my place, anyway."
>
> Testimony of Bob Dornsbach, Transcript of Informal Conference, p. 32.

Mr. Bob Dornsbach provided DLI written information that in October 2010 his fuel cost was $3.15 per gallon.

In response to the informal conference Jim Lloyd provided written information that his 2010 fuel cost was close to $3.00 per gallon and "now is at $4.00 plus and it does not look like it is going to decrease."

After the informal conference, Tom Barnes provided written information that his fuel costs in March 2010 were $2.82 per gallon and that his fuel costs for March 2012 were $4.07 per gallon.

Following the informal conference, DLI staff obtained data from the United States Department of Energy ("DOE") regarding the price of diesel during 2010 as compared to current costs.[1] That data, available at www.eia.doe.gov, show that the average price of diesel during 2010 was $2.964 per gallon. The average price of diesel during January, February, and March 2012 was $3.862 per gallon. Consequently, the average price of diesel for the first three months of this year was 30.4% higher than the average cost of diesel during 2010.

The purpose of Minnesota Rules, part 5200.1105, as stated in its Statement of Need and Reasonableness, is to "provide equitable compensation" to independent truck operators. The commissioner finds that in order to carry out the purpose of the rule, it is appropriate to consider the concerns expressed at the informal conference[2] and to use average 2012 diesel costs in computing and certifying 2012 truck rental rates. Specifically, the commissioner finds that the extreme disparity between 2010 and current fuel costs warrants this adjustment in order for truck operators to be equitably compensated. [3]

Construction truck operating costs were initially determined by survey on a statewide basis and were the subject of further input by interested parties attending the informal conference pursuant to Minnesota Rules, part 5200.1105 on April 4, 2012 and further data on fuel prices from the DOE for 2010 and 2012. In light of the discussion above, fuel costs stated in the surveys were adjusted upward by 30.4% to determine statewide operating costs. As a result of this adjustment, the operating cost for "four axle units, straight body trucks" is determined to be $51.58 per hour; the operating cost for "three axle units" is determined to be $37.35 per hour; the operating cost for "tractor only" is determined to be $41.43 per hour; and the operating cost for "tractor trailers" is determined to be $52.89 per hour.

Adding the prevailing wage for drivers of these four types of trucks from each of the State's ten highway and heavy construction areas to the operating costs, the minimum

---

[1] U.S. Energy Information Administration Midwest No. 2 Retail Prices (Dollars per Gallon)

[2] The DLI has historically used input from the informal conferences to establish certified rates. For example, truck rental rates certified in 2009 varied from the proposed rates based on information gathered at the informal conference.

[3] The commissioner notes that the Minnesota Department of Transportation incorporates a fuel adjustment clause in certain of its contracts to accommodate the fluctuating price of fuel. That clause generally provides for the adjustment of contract payments when the cost of fuel increases or decreases by more than 15% from an indexed rate during the term of the contract. By using 2012 fuel costs in certifying 2012 truck rental rates, the commissioner is not intending to adopt or establish a similar fuel adjustment mechanism. Rather, he is taking this action to effectuate the purpose of Part 5200.1105 in light of the concerns raised at the informal conference and the dramatic increase in the price of diesel between 2010 and effective date of 2012 truck rental rates.

hourly truck rental rate for the four types of trucks in each area is certified to be as follows:

3 Axle Units

	Effective Date	607 Driver Rate	Operating Cost	Truck Rental Rate
Region 1	May 1, 2012	40.10	37.35	77.45
Region 2	May 1, 2012	33.76	37.35	71.11
Region 3	May 1, 2012	25.40	37.35	62.75
Region 4	May 1, 2012	33.76	37.35	71.11
Region 5	May 1, 2012	40.50	37.35	77.85
Region 6	May 1, 2012	38.30	37.35	75.65
Region 7	May 1, 2012	33.76	37.35	71.11
Region 8	May 1, 2012	33.76	37.35	71.11
Region 9	May 1, 2012	40.50	37.35	77.85
Region 10	May 1, 2012	13.22	37.35	50.57

4 or more Axle Units

	Effective Date	604 Driver Rate	Operating Cost	Truck Rental Rate
Region 1	May 1, 2012	40.20	51.58	91.78
Region 2	May 1, 2012	33.91	51.58	85.49
Region 3	May 1, 2012	24.71	51.58	76.29
Region 4	May 1, 2012	33.91	51.58	85.49
Region 5	May 1, 2012	26.34	51.58	77.92
Region 6	May 1, 2012	38.40	51.58	89.98
Region 7	May 1, 2012	20.87	51.58	72.45
Region 8	May 1, 2012	20.87	51.58	72.45
Region 9	May 1, 2012	40.60	51.58	92.18
Region 10	May 1, 2012	32.91	51.58	84.49

		Tractor				
	Effective Date	602 Driver Rate	Operating Cost	Tractor Only Truck Rental Rate	Plus Trailer Operating Cost	Tractor Trail Rental Rate
Region 1	May 1, 2012	40.75	41.43	82.18	11.46	93.64
Region 2	May 1, 2012	34.42	41.43	75.85	11.46	87.31
Region 3	May 1, 2012	22.37	41.43	63.80	11.46	75.26
Region 4	May 1, 2012	34.42	41.43	75.85	11.46	87.31
Region 5	May 1, 2012	21.38	41.43	62.81	11.46	74.27
Region 6	May 1, 2012	37.95	41.43	79.38	11.46	90.84
Region 7	May 1, 2012	25.85	41.43	67.28	11.46	78.74
Region 8	May 1, 2012	34.42	41.43	75.85	11.46	87.31
Region 9	May 1, 2012	41.15	41.43	82.58	11.46	94.04
Region 10	May 1, 2012	33.42	41.43	74.85	11.46	86.31

The operating costs, including the average truck broker fees paid by those survey respondents who reported paying truck broker fees, and the truck rental rates may also be reviewed by accessing DLI's website at www.dli.mn.gov. Questions regarding the operational costs and truck rental rates can be answered by calling (651) 284-5091.

The minimum truck rental rates certified for these four types of trucks in the state's ten highway and heavy construction areas will be effective for all highway and heavy construction projects financed in whole or part with state funds advertised for bid on or after May 1, 2012.

KEN B. PETERSON
COMMISSIONER

NOTICE TO BIDDERS
MARKING CHANGES FROM BOILER PLATE SPECIAL PROVISIONS
November 1, 2013

Bidders are advised that some changes from our normal special provisions are marked to assist in identifying changes. Mn/DOT believes that the majority of the changes are marked, but does not guarantee it. Bidders are advised that they are still responsible for due diligence in determining contract requirements.

Neither Mn/DOT's failure to mark changes, nor the fact that these provisions may vary from provisions used for previous projects, will support a claim by the Contractor for additional compensation or time.

The following provisions, when used, will always be Project specific and will not have changes marked:

Spec. #	Section Name
	SPECIAL PROVISIONS ENCOURAGING INDIAN EMPLOYMENT
	CONTACT INFORMATION
	PRE-LETTING MEETING
1404	MAINTENANCE OF TRAFFIC AND (2563) TRAFFIC CONTROL
1506	SUPERVISION BY CONTRACTOR
1507	UTILITY PROPERTY & SERVICE
1706	EMPLOYEE HEALTH AND WELFARE
1718	FURNISHING RIGHT OF WAY
1803	PROSECUTION OF WORK
1806	DETERMINATION AND EXTENSION OF CONTRACT TIME
1807	FAILURE TO COMPLETE THE WORK ON TIME
2011	CONSTRUCTION SURVEYING
2563	TRAFFIC CONTROL SUPERVISOR

DIVISION S

S-1 CONTACT INFORMATION

Questions regarding this Project, including any questions prior to bidding, are to be directed to Steve Barrett, Resident Engineer, 651-366-5132.

S-2 REFERENCE INFORMATION DOCUMENTS

Bidders are advised that Reference Information Documents (RID) regarding this Project can be found beginning February 21, 2014 at:
ftp://ftp2.dot.state.mn.us//pub/outbound/MetroWatersEdge/2710-2440BridgeScourConstructability/

Bidders may contact Ron Rauchle at 651-234-7880 or via email ron.rauchle@state.mn.us for issues related to obtaining ftp site access and the corresponding information.

Bidders shall consider and use the information provided in the RID at their own risk. MnDOT does not represent or warrant that the information contained in the RID is complete, accurate and conforms with the requirements of this Contract. MnDOT believes the data provided in the RID is accurate, but does not guarantee it.

Bidders understand and agree that MnDOT shall not be responsible or liable in any respect for any loss, damage, injury, liability, cost or cause of action whatsoever arising out of information provided (or not provided) in the RID or from the Bidder's reliance on the RID. An omission, error, or inaccuracy in the RID will not entitle the Contractor to additional compensation, nor will such omission, error, or inaccuracy provide the basis for a claim under MnDOT 1517.

Bidders further acknowledge and agree that:

(A) Use of any information is made on the basis that the Bidder, not MnDOT, has approved and is responsible for said information,

AND

(B) The Bidder is capable of conducting and is obligated to conduct any studies, analyses and investigations as it deems advisable to verify or supplement the information, and that any use of said information is entirely at the Bidder's own risk and at its own discretion.

S-3 EMERALD ASH BORER COMPLIANCE

This Project is located, all or in part, in a county that the Minnesota Department of Agriculture has placed under an Emerald Ash Borer Quarantine. Any work for this Contract is subject to the following:

S-3.1 **Do not marketed to wood using industries or individuals any** part of an Ash (Fraxinus spp) tree from a quarantined area can be without an Emerald Ash Borer compliance agreement with Minnesota Department of Agriculture.

The Contractor shall not make ash or any non-coniferous (hardwood) species with bark attached available to the public for use as firewood from the quarantined area. The Contractor shall not transport entire ash trees, limbs, branches, logs, chips, ash lumber with bark, stumps and roots outside of a quarantined county without fulfilling the requirements of an Emerald Ash Borer Compliance Agreement with the Minnesota Department of Agriculture. Contact the Minnesota Department of Agriculture at 1-888-545-6684 or visit the Emerald Ash Borer website at http://www.mda.state.mn.us/plants/pestmanagement/eab.aspx to find out which counties are quarantined.

S-3.2 If the ash material is going to be shipped out of Minnesota, the Contractor shall contact John.o.haanstad@aphis.usda.gov for United States Department of Agriculture joint Emerald Ash Borer Compliance Agreement approval with the Minnesota Department of Agriculture.

S-3.3 The Contractor shall dispose of ash trees:

(1) In accordance with the Emerald Ash Borer Compliance Agreement, and
(2) By utilizing the ash wood chips within the construction limits for erosion control, construction exit pads or landscaping purposes.

S-3.4 No direct compensation will be made for compliance with these requirements.

S-4 USE OF ADHESIVE ANCHORS

Do not use adhesive anchors in sustained tension. It is allowable for other applications to use adhesive anchors, such as metal rail attachment, in a non-direct tensile application.

S-5 TARGETED GROUP BUSINESS (TGB) AND VETERAN-OWNED SMALL BUSINESS

The MnDOT Targeted Group Business (TGB) and Veteran-owned Small Business programs are part of the MnDOT initiative to increase small business participation on state funded projects. These programs are intended to provide eligible businesses with increased access to state contracting opportunities. Eligibility requirements for both programs are established pursuant to Minn. Stat. §16C.16 and Minn. Rule Parts 1230.1600-1820. TGBs and Veteran-owned Small businesses bidding as Prime Contractors may receive a preference in the bid amount, and contracts may include goals to increase participation of TGBs and Veteran-owned small businesses as subcontractors.

Bidders are directed to the attached "Targeted Group Business (TGB) and Veteran-Owned Small Business Special Provisions" for details.

S-6 ELECTRONIC SUBMISSION OF PAYROLLS AND STATEMENTS AND BIDDERS LISTS FOR STATE FUNDED PROJECTS

These provisions govern how the apparent low bidder must submit the *Bidders/Quoters List* and how the Prime Contractor and all subcontractors shall submit all certified payroll documentation, and post prompt pay requirements. These provisions supersede the following section of the “SPECIAL PROVISIONS DIVISIONS A – LABOR” Section IV. Payrolls & Statements, Subparts (B) & (D). The requirement to submit electronic payrolls through web Trns*port Civil Rights and Labor (wTCRL) system supersedes the requirement to file the Equal Employment Opportunity (EEO) Special Provisions forms EEO-12 and EEO-13. These provisions supersede the TGB/VETs Consolidated Good Faith Efforts Form Part F only.

The Department will not provide additional compensation to ensure compliance with these provisions by the apparent low bidder, Prime Contractor, or any lower tier subcontractors.

General Information: Due to the need for timely submittal of electronic documents, especially the Bidder/Quoters List (S-6.4), the Department highly recommends that all bidders and quoters prior to submitting a bid submit the MnDOT, *Contractor/Vendor Form* or *Trucking Company/Vendor Form* to MnDOT, Office of Construction & Innovative Contracting, Labor Compliance Unit. These forms can be accessed at: http://www.dot.state.mn.us/const/labor/forms.html.

S-6.1 SYSTEM REQUIREMENTS

The Contractors shall submit certified payroll statements, bidders/quoters list, and post the Contract's prompt payment requirements electronically using a wTCRL system for which access will be provided by the Department. To utilize the wTCRL system, the Contractor must have the following:

- A computer running the operating system Windows XP or Windows 7
- Internet Explorer version 8 or 9 (IE9 is preferred - cannot use IE10)
- High-Speed Internet Access (no dial-up access)
- Microsoft Excel 2007 or newer

The Department will provide a link to and a log-in ID for the wTCRL system to a designated employee of the apparent low bidder, Prime Contractor and approved subcontractors identified on the *Request-to-Sublet* forms. The log-in ID and password are unique to the designated employee and must not be shared with other employees.

The Department has provide manuals for the wTCRL system, E-Learning Tool, and other important system links including upcoming training sessions at: http://www.dot.state.mn.us/const/labor/civil-rights-labor.html

S-6.2 CERTIFIED PAYROLL SUMBISSION

The Prime Contractor and all subcontractors must use wTCRL system to provide MnDOT with electronic certified payrolls. The Prime Contractor must ensure that all subcontractors have submitted their vendor information to MnDOT on the required forms listed above prior to working on the Project.

The Prime Contractor will work with Project Engineer (PE) to receive the appropriate login ID's for their company along with their approved subcontractors working on the Project; for purposes of this specification the term "subcontractor" include trucking entities subject to the Contract Special Provision - Division A – Labor. The Prime Contractor shall ensure all subcontractors submit their certified payrolls electronically into the system.

There are three ways to submit certified payrolls electronically into the system:

- Manually enter data into wTCRL
- Import payroll data by using wTCRL system payroll spreadsheet with XML converter tool
- Convert payroll program data to TransXML and import into the system. Information on how to convert to TransXML can be found at: https://xml.cloverleaf.net/resourcekit/

The *Month-end Truck Report* forms required by the Contract must be submitted to the PE through the use of the required paper documents.

The Prime Contractor is responsible for and must assist subcontractors on inputting their payrolls data into the system and if necessary, provide to the PE along with the submitted electronic data, a signed paper certified payroll from the subcontractor.

The PE may at any time require, upon written demand, paper certified payrolls from any or all contractors working on the Project based on the original Contract's Special Provision- Division A.

S-6.3 PROMPT PAY REQUIREMENTS

The Prime Contractor must post payments based on prompt pay requirements to first-tier subcontractors into wTCRL and all first-tier subcontractors must post payments in the wTCRL system to second-tier subcontractors. All subcontractors must verify the receipt of such payments from the prime Contractor or subcontractor in the wTCRL system. The PE may at any time require, upon written demand, paper documents related to Contractor payments from any or all contractors working on the Project to ensure the prompt pay requirements of this Contract are met.

S-6.4 BIDDER/QUOTERS LIST REQUIREMENTS

The Apparent Low Bidder (ALB) will be required to use the wTCRL system to prepare and submit an electronic bidders/quoters list. The ALB must ensure that all subcontractors and suppliers that provide a bid or quote have submitted to MnDOT a *Contractor/Vendor Form* or *Trucking Company/Vendor Form.* These forms may be accessed at: http://www.dot.state.mn.us/const/labor/forms.html. Completed forms must be submitted to MnDOT, Office of Construction & Innovative Contracting, Labor Compliance Unit, prior to completing the electronic bidders/quoters list to ensure the firms' information is in the wTCRL system. The electronic bidders/quoters list is completed by selecting the name of the firm from a vendor list populated from information contained in the wTCRL system. The ALB must access the system using the log-in assigned by the Office of Civil Rights, Small Business Contracting Supervisor. The log-in ID and password are unique to the designated employee and must not be shared with other employees. The ALB must manually enter the following information for each subcontractor or supplier who provided a quote or bid to perform work or supply materials on this Project. This information is required for all TGB, Veteran-owned and non-TGB/Veteran-owned subcontractors and suppliers.

- Firm name;
- Firm address;
- Firm's status as a TGB/Veteran-owned or non-TGB/Veteran-owned
- Proposal line items the firm is proposing to perform AND dollar amount

The bidders/quoters list is due on the Submission Due Date specified in the TGB/Veteran Preference Special Provisions, Section 5, for this Contract. The ALB is required to provide the name of the company's authorized Bidder/Quoter Signee. The Department recommends that all bidders submit this Signee to the Office of Civil Rights, Small Business Contracting Supervisor, prior to bidding on the proposal.

S-6.5 MINNESOTA GOVERNMENT DATA PRACTICES ACT

All data submitted by bidders, the ALB, Prime Contractor, and subcontractors and maintained in wTCRL are subject to and governed by the Minnesota Government Data Practices Act (Minnesota Statutes Chapter 13 or MGDPA). Within wTCRL, bidders, the ALB, Prime Contractor, and subcontractors may have access to not public data, as classified by the MGDPA, including, but not limited to Social Security numbers and user log-in IDs and passwords. Bidders, the ALB, Prime Contractor, and subcontractors must establish appropriate security safeguards for access to not public data and shall employ all suitable precautions to ensure continued protection of not public data. Bidders, the ALB, Prime Contractor, and subcontractors are subject to the civil remedies of Minn. Stat. §13.08 for the unauthorized access or release of not public data.

S-7 (1103) DEFINITIONS

REVISED 04/11/14

The provisions of MnDOT 1103 are supplemented as follows:

S-7.1 The following definition is added to MnDOT 1103:

M Gallon. 1000 Gallons (MGal).

S-7.2 Replace the definitions for "Payment Bond" and "Performance Bond" with the following:

PAYMENT BOND. A bond furnished in accordance with Minnesota Statutes §574.26 and meeting the terms specified in Minnesota Statutes §574.26 subdivision 2 (2).

PERFORMANCE BOND. A bond furnished in accordance with Minnesota Statutes §574.26 and meeting the terms specified in Minnesota Statutes §574.26 subdivision 2 (1).

S-8 (1209) DELIVERY OF PROPOSALS

The provisions of MnDOT 1209 are hereby supplemented with the following:

S-8.1 If the Goal folder(s) contains more than one unknown sub-folder, MnDOT will deem the highest goal commitment submitted to be the bidder's goal commitment and will use that figure for determining if the goal has been met, or for purposes of making a good faith efforts review.

S-9 (1404) MAINTENANCE OF TRAFFIC AND (2563) TRAFFIC CONTROL

REVISED 03/19/14

All traffic control devices shall conform and be installed in accordance to:

- the "Minnesota Manual on Uniform Traffic Control Devices" (MN MUTCD);
- Part 6, "Field Manual for Temporary Traffic Control Zone Layouts" (Field Manual);
- the "Guide to Establishing Speed Limits in Highway Work Zones";
- the Minnesota Flagging Handbook;
- the Minnesota Standard Signs Manual;
- the Traffic Engineering Manual;

And the provisions of MnDOT 1404 and 1710, the Plan, and these Special Provisions.

The Contractor shall furnish, install, maintain, and remove all traffic control devices required to provide safe movement of vehicular traffic through the Project during the life of the Contract from the start of Contract operations to the completion thereof. The Engineer will have the right to modify the requirements for traffic control as deemed necessary due to existing field conditions. The highways shall be kept open to traffic at all times, except as modified below.

Traffic control devices include, but are not limited to, barricades, warning signs, trailers, flashers, cones, and drums, as required and sufficient barricade weights to maintain barricade stability.

S-9.1 TRAFFIC CONTROL

(A) If traffic control layouts are not present in the Plan, or if the Contractor modifies the layout or sequence from the Plan, the Contractor shall submit the proposed traffic control layout to the Engineer, for approval, at least seven (7) days prior to the start of construction. The Contractor does not need to submit layouts that can be found in the Field Manual. All other layouts that are not found in the plan shall be submitted. At least 24 hours prior to placement, all traffic control devices shall be available on the Project for inspection by the Engineer. The Contractor shall modify his/her proposed traffic control layout and/or devices as deemed necessary by the Engineer.

(B) The Contractor shall be responsible for the immediate repair or replacement of all traffic control devices that become damaged, moved or destroyed, of all lights that cease to function properly, and of all barricade weights that are damaged, destroyed, or otherwise fail to stabilize the barricades. The Contractor shall further provide sufficient surveillance of all traffic control devices at least once every 24 hours.

The Contractor shall furnish the Engineer names, addresses and phone numbers of at least two (2) local persons responsible for all traffic control devices.

(C) The Contractor shall inspect, on a daily basis, all traffic control devices, which the Contractor has furnished and installed, and verify that the devices are placed in accordance with **the Traffic Control Layouts,** these Special Provisions, and/or the MN MUTCD. Any discrepancy between the placement and the required placement shall be immediately corrected.

The Contractor shall be required to respond immediately to any call from the Engineer or his designated representative concerning any request for improving or correcting traffic control devices. **If the**

Contractor is negligent in correcting the deficiency within one hour of notification the Contractor shall be subject to an hourly charge assessed at a rate of $250.00 per hour for each hour or any portion thereof with which the Engineer determines that the Contractor has not complied.

The Contractor is required to meet the traffic control device quality standards as determined in the Field Manual. The Contractor shall immediately replace traffic control devices that are deemed unacceptable. Signs that are dirty and result in a noticeable loss of reflectivity at night are also considered unacceptable and shall be cleaned or replaced. The Contractor shall be required to respond immediately to any call from the Engineer or his designated representative concerning the notification of unacceptable traffic control devices. **If the Contractor is negligent in correcting the deficiency within one day of notification the Contractor shall be subject to a daily charge assessed at a rate of $500 for each day or any portion thereof with which the Engineer determines that the Contractor has not complied.**

(D) The person performing the inspection in paragraph (C) above shall be required to make a daily log. This log shall also include the date and time any changes in the stages, phases, or portions thereof go into effect. The log shall identify the location and verify that the devices are placed as directed or corrected in accordance with the Plan. All entries in the log shall include the date and time of the entry and be signed by the person making the inspection. The Engineer reserves the right to request copies of the inspection logs, as he deems necessary.

The Contractor shall provide copies of the inspection logs on a weekly basis on a day of the week determined by the Engineer. Additionally the Engineer may request copies of the logs at any time he deems necessary. **If the Contractor is negligent in providing the inspection logs on the predetermined weekly date or at the Engineer's request, the Contractor shall be subject to an hourly charge assessed at a rate of $250.00 per hour for each hour or any portion thereof with which the Engineer determines that the Contractor has not complied.**

(E) The third sentence of paragraph 2 in MnDOT 1404.7 (Winter Suspension) is hereby revised as follows:

> "In the event that any Contractor-owned traffic control devices are damaged or destroyed making them ineffective for their intended use, the Contractor will receive payment in the amount of the value of the traffic control device as determined by the Engineer."

(F) If, at any time, the Contractor fails to, in a timely manner, properly furnish, install, maintain or remove any of the required traffic control devices, the Department reserves the right to correct the deficiency. **Each time the Department takes such corrective action, the costs thereof, including mobilization, plus $5,000 will be deducted from monies due or coming due the Contractor.**

S-9.2 GENERAL REQUIREMENTS

(A) All portable sign assemblies shall be perpendicular to the ground. No traffic control device (signs, channelizing devices, arrowboards, etc.) shall be weighted so they become hazardous to motorists and workers. The approved ballast system for devices mounted on temporary portable supports is sandbags, unless it is designed, crash tested, and approved for the specific device. During freezing conditions, the sand for bags shall be mixed with a de-icer to prevent the sand from freezing. The sandbags shall be placed and maintained at the base of the traffic control device to the satisfaction of the Engineer.

When signs will remain in the same location for more than 30 consecutive days the signs shall be post mounted. This would not include portable signs, which are set up and taken down at the beginning and end of each work shift. The signs must be post mounted according to the Typical Temporary Sign Framing and Installation Detail Sheet found in the Plan or in these Special Provisions.

(B) When signs are installed, they shall be mounted on posts driven into the ground at the proper height and lateral offset as detailed in the MN MUTCD. **When signs are removed, the sign posts and stub posts**

shall also be removed from the Right of Way within two (2) weeks or the Contractor shall be subject to a daily charge assessed at a rate of $100.00 per day for each day or portion thereof with which the Engineer determines that the Contractor has not complied.

(C) All temporary rigid signs shall be fabricated with an approved retroreflective sheeting material of the appropriate color, and be listed on the Qualified Product Listing (QPL) for either "Sheeting for Rigid Temporary Work Zone Signs, Delineators, and Markers (Type IX and XI) " or "Sheeting for Rigid Permanent Signs, Delineators, and Markers (Type IX and XI)". Signs remaining inplace that still apply during temporary operations need no change in sign sheeting.

Signs shall have an easily identifiable marking on the face to make the identification of approved retroreflective sign sheeting on temporary rigid signs in the field easier. This marking verifies that the sign sheeting has been approved for Rigid Sign. Temporary rigid signs 4 sq. feet and under in size and all barricades and route markers will be exempt from this marking. The appropriate marking shall be used for each type of the approved sheeting types. Refer to the instructions for the marking of temporary signs that are on the APL or directly at the following link: http://www.dot.state.mn.us/products/signing/pdf/typelabel.pdf

The retroreflective sheeting types and qualified products used for temporary signs and barricades are shown at http://www.dot.state.mn.us/products/signing/sheeting.html.

(D) At the beginning of the Project, the Contractor shall store at least **2** extra Type III barricades and **5** extra retroreflective drums, at a convenient location within the Project limits, to be used at the discretion of the Engineer. Furnishing and erecting these traffic control devices shall be incidental.

If additional devices, beyond the quantity specified above, are ordered by the Engineer the Contractor will be compensated according to Section S-9.8 (ADDITIONAL TRAFFIC CONTROL DEVICES) of this Special Provision.

(E) **In Place Signing**

All in place signs and delineators that interfere with the Contractor's normal operation shall be relocated outside of the work area or removed by the Contractor at the direction of the Engineer. **This includes any other sign that interfere with the Contractor's operation.** Signs that are removed and will be reused are to be stored in such a manner as to protect the sign from scratching, fading, or other harmful affects until said signs are reinstalled. Upon completion of work at each sign location, or at the direction of the Engineer, the signs shall be replaced as near to their original locations as possible or to a location designated by the Engineer. **Signs and structures damaged by the Contractor shall be replaced by him at his own expense.**

The reinstalled sign posts shall be plumb and the sign panels shall be level. The minimum mounting height shall be 7 feet above the elevation of the traveled roadway. The minimum embedment length of the stub posts shall be 3.5 feet. The splice between the stub post and the riser post shall be a minimum of 12 inches. **The Contractor will be assessed a $100 charge for each sign that does not comply with the In Place Signing requirements. In addition the Contractor will be required to correct the deficiency at his own cost within 2 weeks of being notified by MnDOT. If the deficiency has not been corrected within 2 weeks, the Contractor will be charged $50 per sign per day until the deficiency has been corrected.**

All costs incurred to relocate, salvage, and reinstall in place signing shall be incidental work.

(F) Open excavation adjacent to the existing pavement will not be permitted on opposite sides of the roadway at the same time.

(G) **The Contractor shall provide protective devices necessary to protect traffic from excavations, drop-offs, falling objects, splatter or other hazards that may exist during construction. This work shall be incidental.** The Contractor will not be allowed to suspend material, equipment, tools and personnel over traffic unless a lane closure is established below. All costs associated with the lane closure will be considered incidental.

(H) The Contractor will not be permitted to park vehicles or construction equipment in a location that obstructs any traffic control device. The parking of workers' private vehicles will not be allowed within the Project limits unless so approved by the Engineer.

Note 1 of Layout 2 of the Field Manual is hereby deleted. The Contractor will not be allowed to load or unload material or equipment on the shoulders of the roadway without a full shoulder closure using appropriate signs, barricades and channelizing devices as directed by the Engineer.

(I) The Contractor will not be allowed to store materials or equipment within 30 feet [10 m] of through traffic unless approved by the Engineer. If materials or equipment must be stored within 30 feet [10 m] of through traffic, the Contractor shall provide Type B channelizers, barricades or barriers, placed near the object to warn and protect traffic.

(J) **High Visibility Apparel**

All workers within the road Right-of-Way who are exposed to either traffic or to construction equipment shall wear reflectorized high-visibility safety apparel.

High-visibility safety apparel means personal protective safety clothing that is intended to provide conspicuity during both daytime and nighttime usage, and meets the minimum performance Class 2 requirements of the ANSI/ISEA 107 – 2004 publication entitled “American National Standard for High-Visibility Safety Apparel and Headwear”.

Additional Requirements: ANSI/ISEA 107-2004 Class 3 Requirements (Class 2 Vest with Class E Long Pants)

- Flag Persons – In addition to an ANSI Class 2 hat, vest, shirt, or jacket, flaggers shall wear high visibility Class E long pants.
- Nighttime and Low Light Conditions – All workers working at night or in low light conditions shall wear high visibility Class E long pants in addition to an ANSI Class 2 vest, shirt, or jacket.

All high visibility apparel must be worn in the manner for which it was designed. All apparel worn on the torso must be closed in the front to provide contiguous 360 degree visibility. If a worker’s high-visibility apparel becomes faded, worn, torn, dirty, or defaced, reducing the conspicuity of the apparel, the apparel shall be removed from service and replaced with new apparel.

The Contractor will be subject to a non-compliant charge for failure to adhere to the clothing requirements as listed above. **Non-compliance charges, for each incident, will assessed at a rate of $500.00 per incident that the Engineer determines that the Contractor has not complied.**

(K) **Night Work**

When work will be performed between the official hours of sunset and sunrise, all appropriate practices for night work will apply.

The Contractor shall provide sufficient numbers of light plants to illuminate the work area as determined by the Engineer. All costs incurred to provide such light plants shall be incidental.

All Contractor's personnel, except operators who will remain in their vehicles at all times, shall wear reflectively striped (approximately 33 feet [10 m] of striping), highly visible, short sleeved one or two piece coveralls (color and striping pattern to be determined by the District Traffic Engineer), at all times while working on the Project. These coveralls shall be considered an incidental. Any Contractor's employee found on the Project not wearing the prescribed reflective coveralls will be immediately ordered off the Project by the Engineer.

The Contractor shall provide a sufficient amount of 2 inch [50 mm] wide highly reflective vehicle marking tape to be applied to Contractor vehicles and equipment, as directed by the Engineer, and as provided by the manufacturer's instructions. This tape shall be considered incidental and shall be on the Approved Products List for "Conspicuity Vehicle Sheeting (Type VII)" as found at: http://www.dot.state.mn.us/products/signing/sheeting.html. Vehicle examples to be marked with tape are Contractor rollers, paver, millers and other equipment normally found in the lane closure.

The State will **assess monetary deductions in the amount of $1000.00 for each Calendar Day** or portion thereof, that the Contractor fails to provide sufficient numbers of light plants as described in this Section S-9.2. As light plants may be dedicated or otherwise made available to the Project, this assessment will be chargeable even if reasons beyond the control of the Contractor such as breakdowns, late delivery of materials, weather delays, or other unanticipated problems cause the work to be accomplished in non-daylight hours.

(L) In temporary traffic control zones only, a 12" x 18" black on white "Keep Right" sign, may be used in lieu of the sizes stated in the Standard Signs Manual.

S-9.3 VEHICLE WARNING LIGHT SPECIFICATION

All Contractors, subcontractors' and suppliers' mobile equipment, operating within the limits of the Project with potential exposure to passing traffic, shall be equipped with operable warning lights that meet the appropriate requirements of the SAE specifications. This would include closed roads that are open to local traffic only. This also includes any vehicle that enters the traveled roadway at any time. The SAE specification requirements are as follows:

360 Degree Rotating Lights - SAE Specification J845

Flashing Lights - SAE Specification J595

Flashing Strobe Lights - SAE Specification J1318

Lights shall be mounted so that at least one light is visible at all times from a height of 3.5 feet and from a 100 foot radius about the equipment. In order to meet the 360 degree at 100 foot radius requirements supplemental lighting may be used in addition to the lights on the Approved Products List. All supplemental lights must be SAE Class 1 certified. This specification is to be used for both day and night time operations. All costs incurred to provide warning lights shall be at no cost to the Department. These warning lights shall also be operating and visible when a vehicle decelerates to enter a construction work zone and again when a vehicle leaves the work zone and enters the traveled traffic lane.

Any warning lights shall be on the Approved Products List for Vehicle Lighting which is found at the following weblink: http://www.dot.state.mn.us/products/vehiclelighting/vehiclesafetylights.html. The list may also be obtained by contacting:

Vehicle Warning Lights
Office of Construction MS650
Transportation Bldg. OR by calling: (651)366-4216
395 John Ireland Blvd.
St. Paul, MN 55155

This list is updated periodically. Warning light suppliers and manufacturers may contact the above for information on adding new products to the list.

A $100 penalty (per incident) will be assessed against the Contractor each time failure to comply with the above requirements is observed on the Project site.

S-9.4 LANE CLOSURE REQUIREMENTS

(A) Temporary lane closures or other traffic restrictions by the Contractor, during work hours and consistent with the time restrictions, will be permitted only during those hours and at those locations approved by the Engineer. Requests for temporary lane closures shall be made at least 24 hours prior to such closures. When a temporary lane closure is used by the Contractor, the closure shall be incidental work.

(B) Temporary lane restrictions will not be permitted between the hours of 6:00 A.M. and 8:00 A.M. on Southbound T.H. 65 and between the hours of 3:00 P.M. and 6:00 P.M. on Northbound T.H. 65. **Work that will restrict or interfere with traffic shall not be performed between 12:00 noon on the day preceding and 9:00 A.M. on the day following any consecutive combination of a Saturday, Sunday and legal holiday**. The Engineer will have the right to lengthen, shorten, or otherwise modify the foregoing periods of restrictions as actual traffic conditions may warrant. **If the Contractor is negligent in adhering to the established time schedules, he shall be subject to an hourly charge assessed at a rate of $500.00 per hour for each hour or any portion thereof with which the Engineer determines that the Contractor has not complied.**

(C) Nighttime lane and sidewalk closures of T.H. 65 are anticipated for concrete pouring due to the navigation channel restrictions.

(D) Temporary lane and sidewalk restrictions of T.H. 65 may be used for material delivery, grouting and debris removal, if needed and as approved by the Engineer.

(E) No lane restrictions will be allowed on any local roads without the approval of the Engineer and the City of Minneapolis via the City's Obstruction Permit.

(F) No equipment shall pass over the pedestrian walk without first closing the walkway and providing a sufficient temporary pedestrian accessible route.

(G) The Contractor shall notify the Engineer in writing at least 72 hours prior to the start of any construction operation that will necessitate lane closure or internal traffic control signing.

(H) Unless otherwise approved by the Engineer, any temporary lane closure that is adjacent to traffic, and is extending to or beyond 1000 feet [300 m] shall have a minimum of one Type III barricade, or three drums, placed in the closed lane for every 1000 feet [300 m] of extension. Any lane closure that is adjacent to traffic and inplace 3 days or more, shall use the Type III barricade only.

(I) All temporary lane closures shall have Type B Channelizers (drums, Type I or Type II barricades, vertical panel or Direction Indicator Barricades) in the lane closure taper and in any shifts in traffic alignment.

(J) Short Term Duration lane closures will not be permitted during inclement weather, nor any other time when, in the opinion of the Engineer, the lane closure will be a greater than normal hazard to traffic.

(K) No center lane closures will be permitted. Only double lane closures as shown in the Field Manual will be allowed at the times as directed by the Engineer. This may require night lane closures if traffic volumes warrant.

(L) The Contractor shall maintain a minimum of 1.25 miles [two km] between temporary lane closures, except if allowed by the Engineer.

S-9.5 FLAGGER TRAINING AND REQUIREMENTS

(A) Any person acting as a flagger on this Project shall have attended a training session taught by a Contractor's qualified trainer. The Contractor's qualified trainer shall have completed a "MnDOT Flagger Train the Trainer Session" in the five years before the start date of this Contract and shall be on file as a qualified flagger trainer with the Department. The Flagger Trainer's name and Qualification Number shall be furnished by the

Contractor at the pre-construction meeting. The Contractor shall provide all flaggers with the MnDOT Flagger Handbook and shall observe the rules and regulations contained therein. This handbook shall be in the possession of all flaggers while flagging on the Project. The Contractor shall obtain handbooks from the Department. Flaggers shall not be assigned other duties while working as authorized flaggers. The “Checklist for Flagger training” form shall be furnished to the Engineer any time a new flagger reports to work on the Project. The "Checklist for Flagger Training" form is found at: http://www.dot.state.mn.us/const/wzs/documents/flaggertrainingchecklist.pdf.

The Engineer will have the right to waive the above requirements.

(B) The Contractor shall furnish flag persons as required to adequately control traffic. Flag persons shall conform to the requirements set forth in the MN MUTCD. All costs incurred to provide such flag persons shall be incidental.

(C) The Contractor shall provide two-way radios for flag persons.

Flag persons shall wear high visibility retroreflective safety vests, pants and hats at all times while actively flagging on the Project. High visibility apparel shall also comply with current Minnesota OSHA Rules 5207.0100 and 5207.1000. The flag persons clothing shall be considered incidental.

The Contractor shall keep the separation distance between the last sign in the “flagger ahead” signing sequence and the actual flagger to the amount shown in the Field Manual, whenever it is practical. The maximum separation distance allowed from the signs to the flagger shall be ½ mile [0.8 km]. The Contractor shall use multiple flagger signing set-ups or continuously move the signing for moving flagging operations to keep within the distance limit. The “flagger ahead” signing sequence shall not be in place when flagging operations are not in effect.

The maximum distance between flaggers shall be ½ mile [0.8 km] unless otherwise authorized by the Engineer. In the event a distance longer than one mile is authorized, the Engineer may order the Contractor to provide two pilot cars at no additional cost to MnDOT.

All signs associated with the flagging operation must be removed or covered when flagging operations are not present.

The Contractor will be subject to a non-compliant charge for failure to adhere to the requirements listed in this Section S-9.5. These requirements include: providing two-way radios for flaggers, properly attired flaggers, flagging operation length requirements, and distance limit between the flagger and the last sign in the flagger sequence, and removing or covering flagger signs when flagging operations are not present. **Non-compliance charges, for each incident will be assessed at a rate of $500 per incident that the Engineer determines that the Contractor has not complied.** The charges may be assessed equally, separately, and may be assessed concurrently.

The Contractor shall coordinate the flagging operations in a manner that causes as little delay to the traveling public as possible, and at no time shall the delay exceed **5 (five) minutes**. In the event that the Contractor is unable to meet the maximum delay requirements, operations shall shut down until such time a new traffic control plan is developed which does meet the maximum delay requirement.

If hauling operations create hazards for the traveling public, the Contractor will be required to provide additional flaggers, as directed by the Engineer. All costs incurred to provide the additional flaggers shall be incidental.

S-9.6 MAINTENANCE AND STAGING OF TRAFFIC CONTROL

(A) The Contractor shall maintain, at all times, the existing traffic movements along all roadways and at all intersections.

(B) Pedestrian traffic shall be maintained and guided through the Project at all times, as per Chapter 6D of the MN MUTCD.

(C) The Contractor shall cover all signs are not consistent with traffic operations. The cover should be a plate of solid material covering the entire legend or all of that part of the legend that is inappropriate. The cover shall be bolted to the sign and shall have a minimum of 1/8 inch [3 mm] plastic washers between the sign face and the cover. See Figures 8.2A, 8.2B and 8.3C of the Traffic Engineering Manual for details. This work will be done as required by the Engineer.

(D) Street identification signage shall be maintained at all times. Where the only existing signs are small city or county signs located at the intersection, street names and address numbers shall be maintained by temporary installations as required by the Engineer. This is necessary to maintain the 911 emergency system.

(E) The Contractor shall maintain a lane width of not less than 11feet in each direction.

(F) The Contractor may only ban parking within the construction limits with the City of Minneapolis' permission. All necessary signing is the responsibility of the Contractor and shall be installed, as directed by the Engineer, 24 hours prior to the parking ban. The Contractor shall remove that signing as soon as the work in the area has been completed.

The Contractor shall notify the City of Minneapolis via the obstruction permit at least 72 hours prior to posting any parking ban within the city.

(G) The Contractor shall keep the Right-of-Way fence closed up, except during work hours, by means of the in place fence, newly constructed fence, temporary fence (at the Contractor's expense), or a combination thereof.

(H) No access to or from any public road will be permitted for the Contractor's equipment, material deliveries, the hauling of excavated materials of any kind, or employees' private vehicles, except at in place public road intersections, or at locations and in such manner as approved by the Engineer.

(I) As each road is completed, the Contractor shall install the final signing and pavement markings required to safely open that road to traffic. This work shall be completed on or before the date of opening as approved by the Engineer. Overhead signs may be temporarily ground mounted at the Contractor's expense.

(J) The Contractor shall be required to supply manpower to assist MnDOT personnel in pavement marking related projects such as, but not inclusive to, collecting data from in place lane lines and marking final pavement marking alignments. This shall also include any lane closures or traffic control necessary to complete these projects safely. Payment for said pavement marking related projects shall be incidental.

S-9.7 MEASUREMENT AND PAYMENT

Traffic Control will be measured and paid for as follows:

Payment for furnishing, installing, maintaining, relocating and subsequently removing traffic control devices (including flagpersons) as required will be made as a lump sum under Item 2563.601 (Traffic Control) and according to the following schedule:

(1) When 5 percent of the Contract amount is earned, 50 percent of the amount bid for traffic control will be paid.
(2) When 10 percent, or more, of the Contract amount is earned, an additional 25 percent of the amount bid for traffic control will be paid.
(3) When 50 percent, or more, of the Contract amount is earned, an additional 20 percent of the amount bid for traffic control will be paid.
(4) The remaining 5 percent bid for traffic control will be paid when all work has been completed and accepted.

(5) In all items above, the original Contract amount shall be the total value of all Contract Items including the traffic control item, but the percentage earned in each case shall be exclusive of the traffic control item.

S-9.8 ADDITIONAL TRAFFIC CONTROL DEVICES

In addition to the traffic control devices shown on the Traffic Control Layouts, and/or Field Manual, the Engineer may require more traffic control as traffic conditions may warrant. These items are not intended for temporary lane closures.

(A) General Requirements:

The Contractor shall furnish the additional traffic control devices as ordered by the Engineer.

The devices shall be installed and maintained in a functional and/or legible condition, at all times, to the satisfaction of the Engineer.

(B) Measurement:

Flashers, barricades, reflectorized drums, portable changeable message signs, 48 x 48 inch [1220 x 1220 mm] signs, and flashing arrow boards will be measured by the number of individual units of each type multiplied by the number of Calendar Days each unit is in service.

Standard signs of each type; other than 48 x 48 inch [1220 x 1220 mm] signs will be measured by the face area of signs furnished multiplied by the number of Calendar Days each square foot [square meter] of sign is in service.

Special construction signs will be measured by the face area thereof furnished and installed as specified.

Flag Persons and Police Officers will be measured by the length of time each is in service on the job. Police Officers shall be equipped with a car at all times on the job and the car shall be incidental.

(C) Payment:

Payment for additional traffic control devices of each type, at the appropriate pre-determined Unit Day price set forth below, shall be compensation in full for all costs of furnishing, installing, maintaining, and subsequently removing and disposing of the device.

Payment for standard signs of each type, other than 48 x 48 inch [1220 x 1220 mm] signs, will be made at the appropriate pre-determined Square Foot/Day [Square Meter/Day] price, which shall be payment in full for all costs of furnishing, installing, maintaining and subsequently removing and disposing of the signs.

The pre-determined Square Foot [Square Meter] price for "Construction Signs - Special" shall be payment in full to furnish, install, maintain and remove such signs. All materials required to furnish and install these signs will remain the property of the Contractor.

Payment for Flag Persons and Police Officers will be by the Unit Hour for each hour or portion thereof that each is in service on the Project.

Payment for all additional traffic control devices, as ordered by the Engineer, will be made in accordance with the following schedule:

ADDITIONAL TRAFFIC CONTROL DEVICES

Item No.	Item	Unit	Predetermined Price
2563.610	Flag Person	Hour	*
2563.610	Police Officer	Hour	**
2563.613	Type I Barricade w/Steady Burn Light	Unit Day	$1.05
2563.613	Type III Barricade	Unit Day	2.75
2563.613	Direction Indicator Barricade	Unit Day	1.25
2563.613	Reflectorized Plastic Safety Drum	Unit Day	0.85
2563.613	Reflectorized Plastic Safety Drum w/Down Arrow	Unit Day	0.95
2563.613	Weighted Traffic Channelizer	Unit Day	0.40
2563.613	Flasher Type A (Low Intensity)	Unit Day	0.50
2563.613	Flasher Type B (High Intensity)	Unit Day	1.75
2563.613	Flasher Type C (Steady Burn)	Unit Day	0.90
2563.613	48 x 48 inch [1220 x 1220 mm] Standard Sign	Unit Day	1.75
2563.613	48 x 48 inch [1220 x 1220 mm]Standard Sign w/Support	Unit Day	2.20
2563.613***	Portable Changeable Message Sign	Unit Day	225.00
2563.613****	Flashing Arrow Board (one shift)	Unit Day	33.00
2563.613****	Flashing Arrow Board (24 hour day)	Unit Day	45.00
2563.617*****	Standard Signs	m^2/Day	1.08
2563.617*****	Standard Signs	SQ.FT./Day	0.10
2563.617*****	Standard Signs w/support	m^2/Day	1.72
2563.617*****	Standard Signs w/support	SQ.FT./Day	0.16
2563.604	Construction Signs - Special	m^2	270.00
2563.618	Construction Signs - Special	SQ.FT.	25.00

* Shall be paid at the Contract Flagger Classification Total Rate, which is the Basic Rate plus the Fringe Rate.

** Shall be paid at the invoice price plus 10%

*** (PCMS) Type C Trailer Mounted Message Signs will be permitted. It is imperative that the Contractor continually operate each PCMS at maximum legibility. Many factors, such as mechanical problems, insufficient charging, incorrect intensity settings, or other factors can degrade performance. If at any time the Contractor fails to operate a Portable Changeable Message Sign at maximum legibility, as determined by the Engineer, no payment will be made for each day that the Message Sign is deemed inadequate.

**** It is imperative that the Contractor continually operate each Flashing Arrow Board at maximum legibility. Many factors, such as mechanical problems, insufficient charging, incorrect intensity settings, or other factors can degrade performance. If at any time the Contractor fails to operate the Flashing Arrow Board at maximum legibility, as determined by the Engineer, no payment will be made for each day that the Flashing Arrow Board is deemed inadequate.

***** Other than 48 X 48 inch [1220 X 1220 mm] Signs, with or without support.

NOTE: These predetermined unit prices apply only if not listed as separate bid items.

Barricades, drums and signs by the Unit Day shall be paid for up to 90 days per device. After 90 days, payment per Unit Day will continue at a reduced price of 40% of the Unit price.

S-10 (1507) UTILITY PROPERTY AND SERVICE

Construction operations in the proximity of utility properties shall be performed in accordance with the provisions of MnDOT 1507, except as modified below:

S-10.1 Add the following to MnDOT 1507.2:

(3) The Contractor shall acquire a Positive Response confirmation from MnDOT for all proposed excavations when the Gopher State One Call has indicated MnDOT utilities may be affected. The Contractor may call MnDOT Electrical Services Section (ESS) Dispatch Locating to confirm the status of Utility infrastructure owned by MnDOT. MnDOT Electrical Services Section (ESS) Dispatch Locating can be contacted at the following phone numbers (651) 366 -5750 or (651) 366-5751. The Contractor shall be responsible for all damage to MnDOT owned Utility infrastructure if a Positive Response confirmation was not acquired from MnDOT.

S-10.2 If the Contractor is negligent in adhering to MnDOT 1507.2, he will be subject to a daily charge assessed at a rate of $500.00 per excavation area per day for each day or any portion thereof with which the Engineer determines that the Contractor has not complied.

S-10.3 All utilities that relate to this Project are classified as "Level D," unless the Plans specifically state otherwise. This utility quality level was determined according to the guidelines of CI/ASCE 38-02, entitled "Standard Guidelines for the Collection and depiction of existing subsurface utility data."

S-10.4 By bidding on this Contract, the bidder agrees that it shall use the Plan to identify the location of MnDOT drainage facilities as satisfying the requirements of Minnesota Statutes Ch. 216D and Minnesota Rules 7560.0250 with respect to MnDOT's storm water drainage facilities.

S-10.5 The following utility owners have existing facilities in the area of construction. These utilities will not be affected by work under this Contract. The utilities listed below are for informational purposes only.

Centurylink
City of Minneapolis
Xcel Energy

See http://www.dot.state.mn.us/utility for utility operators contact list.

S-11 (1512) UNACCEPTABLE WORK

MnDOT 1512 is hereby modified as follows:

S-11.1 Replace MnDOT 1512.1 number (5) with the following:

(5) After the Contractor has been given proper notice to acceptably correct the Work and Materials and has failed to do so, provide notice of default in accordance with MnDOT 1808 “Default of Contactor”.

S-12 (1513) RESTRICTIONS ON MOVEMENT AND STORAGE OF HEAVY LOADS AND EQUIPMENT

The provisions of MnDOT 1513 are modified as follows:

S-12.1 The last paragraph of MnDOT 1513 is changed to read:

If loading exceeds the above defined limits, the Contractor shall submit the proposed loads and structural analysis of the deck and beams certified by a Professional Engineer to the Bridge Engineer for the Bridge Engineer's review within a minimum of 7 calendar days before placement of loads.

S-13 (1514) MAINTENANCE DURING CONSTRUCTION

The provisions of MnDOT 1514 are supplemented with the following:

In addition to the Contractor's requirements for sweeping as required under MnDOT 2051 (Maintenance and Restoration of Haul Roads), the Engineer may require additional sweeping of roads adjacent to the construction site to provide safe conditions for the traveling public, environmental reasons, local regulatory requirements or as otherwise directed by the Engineer.

Payment for additional sweeping ordered by the Engineer will be made as specified below. (This price represents a shared cost.)

Pick Up Broom W/Operator.....$55.00 per hour

Self Propelled Pavement Broom W/Operator .....$30.00 per hour

S-14 (1517) CLAIMS FOR COMPENSATION ADJUSTMENT

The provisions of MnDOT 1517 are supplemented with the following:

S-14.1 NOTICE OF CLAIM:

At the time the Contractor gives written notice of the claim, the Contractor and the Department shall immediately begin to keep and maintain complete and specific records to the extent possible. The records shall consist of, but are not limited to, cost and schedule records concerning the details of the perceived claim.

Unless otherwise agreed to in writing, the Contractor shall continue with and carry on the work and progress during the pendency of any claim, dispute, decision or determination by the Engineer, and any arbitration proceedings.

S-14.2 SUBMISSION OF CLAIMS:

The Contractor shall submit the claim to the Engineer no later than 60 Calendar Days after receiving written notice from the Engineer that direct damages (money or time due) resulting from the claim has occurred in the opinion of the Engineer. If, in the opinion of the Contractor, the direct damages have not fully occurred, the Contractor shall provide written justification detailing why the direct damages have not fully occurred. This written justification shall be submitted to the Engineer no later than 30 Calendar Days from receiving the notice from the Engineer. If proper justification is not given as required within the 30 Calendar Day requirement or the claim is not submitted to the Engineer within 60 Calendar Days after receiving notice from the Engineer that the direct damages have occurred, the Contractor waives all claims for additional compensation in connection with the work already performed.

The contents of the claim shall be in accordance with MnDOT 1517 and shall also include all scheduling documentation related to the claim

The Engineer shall have access to the Contractors records involved in the claim and, when so requested, shall furnish the Engineer copies of claim documentation.

The Contractor shall promptly furnish any clarification and additional information or data requested in writing by the Engineer.

All claims shall be submitted through the Contractor. Submission of claims directly from subcontractors shall constitute a waiver of that portion of the claim.

S-14.3 DECISION ON CLAIMS:

The Department intends to resolve claims at the lowest possible administrative level. Upon receipt of the claim, the Engineer will make a written decision in relation to any claim presented by the Contractor within the following time frames:

(A) For an adjustment in compensation, or other contractual dispute between the parties where the amount in controversy is $75,000.00 or less, 60 Calendar Days from the receipt of the Contractor's claim;

(B) For an adjustment in compensation, or other contractual dispute between the parties where the amount in controversy is more than $75,000.00, 90 Calendar Days from the receipt of the Contractor's claim.

Unless the Contractor and the Engineer otherwise stipulate in writing to a later time, if the Engineer does not make a decision or determination within these time frames, the claim shall be deemed denied.

When the Contract has established a dispute resolution process, that moves the dispute through various levels of both organizations, this process shall also be completed within the above time period.

S-14.4 MEDIATION

Notwithstanding the formal claims procedures set forth in this Special Provision, the parties may at any time enter into nonbinding mediation by mutual agreement. If the parties agree to mediation, then the time requirements set forth above in Section S-14.3 (A) and (B) are suspended until the mediation is completed. The time and place for mediation, as well as selection of the mediator, shall be established by mutual agreement. The mediator’s costs shall be divided equally between the Contractor and the Department. This payment shall be accomplished by the Contractor paying in full all costs and fees for the mediator and then submit the bill to the Engineer for 50 percent reimbursement. Either party may terminate mediation at any time.

S-14.5 RIGHTS OF ARBITRATION:

The decision of the Engineer in relation to the Contractor's claim shall be deemed final unless the Contractor commences a legal action within the time prescribed by law or unless the Contractor invokes arbitration as prescribed hereafter in these Special Provisions. Nothing herein contained shall be so construed as to preclude the Contractor from commencing a legal action in relation to claims for a single issue in excess of $75,000.00 but the Contractor's sole legal remedy in relation to claims of $75,000.00 or less shall be arbitration as prescribed hereafter in these Special Provisions. If the claim amount is in excess of $75,000, the Contractor and MnDOT may mutually agree to arbitration.

If the Contractor seeks to arbitrate a claim of $75,000 or less, the Contractor shall submit a written request for arbitration to the Department’s Claims Engineer in MnDOT’s Central Office within 30 Calendar Days after the Contractor’s receipt of the Engineer's decision. Failure to reasonably conform with this time requirement waives the right to arbitration. The scope of the arbitration proceeding shall be limited to the claim(s) that the Contractor previously presented to the Engineer for decision

S-14.6 ARBITRATION OF CLAIMS AND DISPUTES:

(A) For purposes of this section, a claim for adjustment in compensation shall mean an aggregate of operative facts which give rise to the rights which the Contractor seeks to enforce. Stated another way, a claim is the event, transaction, or set of facts that give rise to a claim for compensation. Any Contractor having a claim in excess of $75,000.00 may waive or abandon the dollar amount in excess of $75,000.00 so as to bring the claim within the scope of this section. However, the arbitration award shall not exceed $75,000.00. Various damages claimed by the Contractor for a single claim may not be divided into separate proceedings to create claims within the $75,000.00 limit.

(B) More than one separate claim may be presented at each arbitration hearing if agreed to by the Department, the Contractor, and the Arbitrator.

(C) Selection of the Arbitrator/ Optional Use of the American Arbitration Association:

a. Selection of the arbitrator shall be conducted by one representative of the Department and one representative of the Contractor. A single person shall represent the prime and all subcontractors involved in the claim. Separate representation for subcontractors during the selection of the arbitrator is not allowed.

b. The parties may mutually agree to have the arbitration process administered by the American Arbitration Association ("AAA").

c. The arbitration shall be administered by a single arbitrator.

d. The parties shall select an arbitrator by mutual agreement, or, if the parties have agreed to use the AAA to administer the process, shall select an arbitrator from a list of arbitrators provided by the Association in accordance with the Association's procedures.

(D) Arbitration Proceedings and Decision

a. All arbitration of claims shall be conducted in Minneapolis, Minnesota, or another mutually agreed upon location.

b. Regardless of whether the parties have agreed to use AAA to administer the process, the arbitration proceeding shall be in accordance with the Construction Industry Arbitration Rules of the American Arbitration Association then in effect and in accordance with the requirements below. The arbitration procedures set-forth in this Special Provision shall take precedence over conflicting American Arbitration Association requirements.

c. If mutually agreed to by both parties, the arbitration proceeding shall follow the Fast Track rules of the American Arbitration Association.

d. Unless otherwise agreed to by the parties, the arbitration hearing shall be bifurcated into a liability phase and, if needed, a valuation phase. No evidence or testimony regarding the value of the claim shall be presented during the liability phase.

e. The Contractor shall first present evidence to support the claim. The Department will then present evidence supporting its defense. Witnesses shall submit to questions or examinations. The arbitrator has the discretion to vary this procedure and shall afford a full and equal opportunity to all parties to be heard. Exhibits, when offered by either party, may be received in evidence by the arbitrator.

f. The arbitrator shall entertain motions, including motions that dispose of all or part of a claim or that may expedite the proceedings.

g. There shall be no ex parte communication between any party and an arbitrator.

h. When satisfied that the presentation of the parties is complete, the arbitrator shall declare the liability phase of the arbitration hearing closed. The arbitrator shall then determine whether MnDOT is liable.

i. If the Department is found to be liable, the arbitration proceeding shall continue before the same arbitrator to resolve all damages issues. The proceedings for this portion of the arbitration shall follow the procedures outlined in Section S-14.6(D)e of this Special Provision.

j. Within three Calendar Days after the close of the damages portion of the hearing, each party shall submit to the arbitrator their last best offers. The arbitrator shall be limited to awarding only one of the two figures submitted. In no event shall a claim award in arbitration exceed $75,000.

k. The decision or award of the arbitrator shall be:

i. In writing showing the basis for the decision or award. The arbitrator shall use the Contract and Minnesota law, or, in the absence of Minnesota law on the issue(s), other persuasive authority, as the basis for the decision.
ii. Final and binding on both the Department and the Contractor.

The award shall have the same finality as is accorded awards under the Uniform Arbitration Act, Minnesota Statutes Chapter 572.

(E) Arbitration Costs

a. Each party to the arbitration shall bear its own costs and fees assessed by the American Arbitration Association or independent arbitrator which shall be divided equally between the parties to the arbitration. This payment will be accomplished by the Contractor paying in full all costs and fees for the arbitrator and then submit the bill to the Engineer for 50 percent reimbursement.

b. Each party shall bear its own preparation costs.

S-14.7 PRE-AWARD INTEREST AND PRE-JUDGMENT INTEREST

Pre-award interest will commence on the date that a request for arbitration is made, in writing to the Engineer, following the submission of a claim that complies with the requirements of MnDOT 1517. Pre-judgment interest will commence on the date that an action is commenced following the submission of a claim that complies with the requirements of MnDOT 1517. Pursuant to Minnesota Statutes §549.09 this Contract expressly provides dates for the commencement of interest that may vary from the dates provided in statute.

S-15 (1602) NATURAL MATERIAL SOURCES

The provisions of MnDOT 1602 are supplemented with the following:

S-15.1 The expansion of any existing natural material sources, or the creation of new Natural Material Sources, will be subject to the requirements of the Farmland Protection Act of 1981 (FPPA or the ACT). Coordination to comply with FPPA shall be the responsibility of the Contractor. Contact the Natural Resources Conservation Service (NRCS) office for the county in which the source is located for further information.

S-16 (1701) LAWS TO BE OBSERVED (WET LANDS)

The provisions of MnDOT 1701 are modified and/or supplemented with the following:

S-16.1 If the Contractor operations involve the excavation and/or disposal of material off MnDOT Right of Way, the Contractor is advised of the following:

MN Statutes Sections 103G.2212 and 103G.241 stipulate that an agent or employee of another may not:

1) drain, excavate, or fill a wetland, wholly or partially; or
2) construct, reconstruct, remove, or make any change in any reservoir, dam, or the course, current, or cross-section of any public water

unless a signed statement from the property owner is obtained stating that any permit or wetland replacement plan required for the work is in place, or that a permit or replacement plan is not required; **AND** this statement is mailed to the appropriate office with jurisdiction over the wetland or public water prior to initiating the work.

The "Landowner Statement and Contractor Responsibility For Work in Wetlands or Public Waters" can be found at http://www.bwsr.state.mn.us/wetlands/forms/Contractor_Responsibility.doc . The Contractor shall provide the Engineer with a copy of the completed "Landowner Statement and Contractor Responsibility for Work in Wetlands or Public Waters" for the excavation and/or disposal site prior to initiating the work.

S-17 (1701) LAWS TO BE OBSERVED (CULTURAL RESOURCES – STATE FUNDED)

The provisions of MnDOT 1701 are modified and/or supplemented with the following:

S-17.1 It will be MnDOT's responsibility to obtain a **Cultural Resources Unit (CRU) determination of effect letter** for MnDOT owned or leased Natural Material Resources if listed in the Construction Plan. It is MnDOT's responsibility to obtain a CRU determination for all Right of Way needed for this Project.

S-17.2 If the Contractor operations require the excavation and disposal of material off MnDOT Right of Way, the Contractor is advised of the following:

MnDOT CRU will review the proposed excavation/disposal area to determine the effect to historic properties. The MnDOT CRU will obtain Minnesota Historical Society (MHS) comment under the Minnesota Historic Sites Act only when there is a potential to affect historic properties listed in the State or National Registers of Historic Places or to consult with MHS and the Office of the State Archaeologist (OSA) under the Field Archaeology Act of Minnesota when the project has the potential to affect known or suspected archaeological sites or the Minnesota Private Cemeteries Act when human burials are an issue. The Contractor must request a review from the CRU, at Contractor's expense, before any material taken from the area can be used on State Projects or any disposal can be made in the area. Typically, this review may take 15 calendar days after receipt of the request. However, in some cases the review period may be longer. Any time delays are the responsibility of the Contractor and are not a basis for claim for damages due to delay of Contract.

(A) Required reviews may be obtained by contacting MnDOT's CRU at:

Culturalresources.dot@state.mn.us

Cultural Resources Unit
Office of Environmental Stewardship
Minnesota Department of Transportation
395 John Ireland Blvd.
Mail Stop 620

St. Paul, Minnesota 55155

And a request must be filled out with the following form:

http://www.dot.state.mn.us/culturalresources/process/PitForm.doc

(B) The Contractor shall give the Project Engineer a copy of the MnDOT CRU determination of effect letter. If this letter states that there is **no potential to affect properties listed in the State or National Registers of Historic Places or to affect known or suspected archaeological sites**, no further action is required by the Contractor.

HOWEVER

(C) When the MnDOT CRU requires a Cultural Resources Field Survey, The Contractor shall secure professional services to a conduct a survey and prepare a report for the MnDOT CRU.

1. A list of qualified acceptable Archaeologists and/or Historians will be furnished to the Contractor by the MnDOT CRU, upon request.

2. When a cultural resources field survey is required, Contract time will be adjusted in accordance with MnDOT 1806 for any suspension of work required to comply with these requirements. No monetary claims due to delays or loss of time for off-site construction activity will be allowed.

3. The cost of the cultural resources field survey and report are the Contractor's responsibility.

The Contractor will **NOT** be given permission to use the proposed material resources site, disposal site, or embankment/excavation site until such time as the MnDOT CRU grants its permission.

S-17.3 If any human remains are encountered within the Project limits, the Contractor shall immediately stop work in the vicinity, notify the Engineer, and request suspension of work in the vicinity of the discovery area, in accordance with MnDOT 1803.6.

S-18 (1706) EMPLOYEE HEALTH AND WELFARE

The provisions of MnDOT 1706 are supplemented with the following:

S-18.1 The Contractor shall not use any motor vehicle equipment on this Project having an obstructed view to the rear unless:

(A) The vehicle has a reverse signal alarm which is audible above the surrounding noise level; or

(B) The vehicle is backed up only when an observer signals that it is safe to do so.

S-18.2 **A $500.00 monetary deduction (per incident) will be assessed by MnDOT for violations of safety standards and requirements that have the potential for loss of life and/or limb of Project personnel or the public.** The areas of special concern include, but are not limited to excavation stability protection, fall protection, protection from overhead hazards, vehicle backup protection (see S-18.1 above), confined space safety, blasting operations, and personal safety devices.

S-18.3 None of the monetary deductions listed above shall be considered by the Contractor as allowance of noncompliance incidents of these safety requirements on this Project.

S-19 (1707) PUBLIC CONVENIENCE AND SAFETY

Metro Transit has bus service in the Project area which will be affected by this construction. The Contractor shall notify the following Metro Transit representative prior to the start of the Project:

Lisa Johnson
Manager of Street Operations
Lisa.Johnson@metc.state.mn.us
612-349-7570

S-20 (1710) TRAFFIC CONTROL DEVICES

MnDOT 1710 is hereby modified as follows:

S-20.1 MnDOT 1710.1(2) is deleted and replaced with the following:

(2) Signs shall meet the crash testing requirements of NCHRP 350 as specified by the MN MUTCD and the Manual for Assessing Safety Hardware (MASH).

S-20.2 The last paragraph of MnDOT 1710.1 is deleted and replaced with the following:

The Project Engineer may require the Contractor to provide a Letter of Compliance stating that all of the Contractors devices are NCHRP 350 and also meet the requirements of MASH. The Letter of Compliance must also include approved drawings of the different signs and devices.

S-21 (1712) PROTECTION AND RESTORATION OF PROPERTY AND LANDSCAPE

Bidders are advised that they may review any environmental documents and permits concerning this Project prior to bidding. The Department's contact persons in the District are as follows:

Environmental Documents:

Rick Dalton
MnDOT Metro District
Project Documentation Unit
Phone: 651-234-7677

Permits:

Beth D. Neuendorf, PE
District Water Resources Engineer
MnDOT Waters Edge
1500 W County Road B2
Roseville, MN 55113
(651) 234-7520

S-22 (1801) SUBLETTING OF CONTRACT

The provisions of MnDOT 1801 are modified as follows:

S-22.1 The third paragraph of MnDOT 1801 is modified to read:

On Contracts with Disadvantaged Business Enterprise (DBE), Targeted Group Business (TGB) or Veteran-Owned Small Business (VET) established goals, or any combination thereof, the Contractor's organization shall perform Work amounting to not less than 30 percent of the total

original Contract Amount. The Department will deduct specialty items from the total original Contract Amount before calculating the amount of Work that the Contractor shall perform.

S-23 (1802) TRAINING FOR CONSTRUCTION TRUCK OPERATORS

Operators of construction trucks hauling construction materials such as borrow, aggregate base, asphalt mixtures and concrete paving mixtures are encouraged to become certified as a Level I Construction Truck Operators (CTO).

This one-day session taught in various MnDOT Districts will feature classroom and hands-on educational experiences. The objective of the CTO Training is to make the driver aware of the Federal and State requirements and regulations regarding the construction truck and driver, and the safe driving techniques that will result in the safe operation of the construction truck. Presenters include Minnesota State Patrol, Minnesota Department of Transportation and the Minnesota Safety Center.

The Minnesota State Patrol, the Minnesota Highway Safety Center, the Minnesota Trucking Association, the Minnesota Asphalt Pavement Association and the Minnesota Department of Transportation co-sponsored this training.

Additional information about this certification program can be obtained by contacting any of the following:

	PHONE #	FAX #
Minnesota Asphalt Pavement Association: E-mail: info@mnapa.org	651-636-4666	651-636-4790
Minnesota Department of Transportation: E-mail: motorcarrier@state.mn.us Website: http://www.dot.state.mn.us/cvo/index.html	Toll Free: 1-888-472-3389 651-405-6060	651-405-6082
Minnesota Highway Safety Center: E-mail: tjsakry@stcloudstate.edu Website: http://mnsafetycenter.org	Toll Free: 1-888-234-1294 320-255-4732	320-255-3942
Minnesota State Patrol: Website: http://www.dps.state.mn.us/patrol/comveh/index.htm	Toll Free: 1-888-472-3389 651-405-6171	651-405-6082
Minnesota Trucking Association: E-mail: john@mntruck.org Website: http://www.mntruck.org	651-646-7351	651-641-8995

S-24 (1803) PROJECT SCHEDULES

REVISED 04/11/14

The provisions of MnDOT 1803 are modified as follows:

S-24.1 This Contract allows for the use of a “Bar Chart Schedule” as the Progress Schedule for the Project.

S-24.2 The provisions of MnDOT 1803.3 A are hereby deleted and the following is substituted therefor:

A General Requirements

If the Contractor intends to use Critical Path Method (CPM) schedules, or when the Department specifies the Work under this Contract shall be scheduled using CPM, the Work shall be planned, accomplished, and reported using CPM for the Contractor's Progress Schedules.

The Contractor will access the Department's Enterprise Project Management System (EPMS) Primavera P6 software to plan and schedule all work shown in the contract documents.

A.1 MnDOT Enterprise Project Management System (EPMS)

MnDOT has installed Primavera P6 software on internet accessible servers for use by appropriate Department personnel, Consultants, and Contractors. The State will provide access to MnDOT's Primavera P6 software and the MnDOT Enterprise Project Management System (EPMS), for use by the Contractor for preparing, maintaining, and submitting all schedules.

A.2 MnDOT Enterprise Project Management System (EPMS) Configuration

The Department will determine the storage location for the project schedule files on the Department's Enterprise Project Management System and will provide the Contractor with the naming convention for all progress schedule submissions. As this software is an enterprise application, the Department will be the sole entity to modify the EPMS structure, the Organizational Breakdown Structure (OBS), Global Activity Codes, Global Calendars, User Defined Fields, Security Profiles, Administrative Categories, and Administrative Preferences.

A.3 Minimum Network Requirements for EPMS

The latest Citrix On-line plug-in must be downloaded to the computer being used to access the MnDOT EPMS system. The latest MnDOT approved Citrix Client can be downloaded at: http://webportal.dot.state.mn.us.

A.4 Contractor Access to MnDOT Enterprise Project Management System (EPMS)

The Contractor shall submit a P6 Request for Access Form for each proposed Primavera user to obtain the required User ID's and Passwords for access to the MnDOT Citrix Webportal and Primavera P6 Software on the Department's network servers. The form, in PDF format, can be downloaded from http://www.dot.state.mn.us/const/tools/contracttime.html under the heading *Primavera P6* and shall be submitted to CPMSchedule.DOT@state.mn.us.

The P6 Request for Access Form may be submitted any time following the announcement by the Department that the Contractor has been awarded the contract. The Department will process these requests and should generally provide the User ID's and Passwords within one week of receipt of the P6 Request for Access Form. The User ID's and passwords will be provided to the Contractor (for the Project Scheduler plus one other person) to obtain secure Internet access to the Primavera P6 software and project schedule data.

Instructions on how the Contractor will access the MnDOT Citrix Webportal & Primavera P6 Software can be downloaded at:
http://www.dot.state.mn.us/const/tools/docs/MnDOTCitrixWebporta_P6Software.pdf..

A.5 Importing/Exporting Schedule Files

The Department will not "Import" or accept Schedule files from any other computer system.

A.6 Project Scheduler

1. The Contractor shall designate an individual, entitled the Project Scheduler, who will develop and maintain the construction progress schedule.
2. The Project Scheduler is recommended to have at least three (3) days of training in Primavera P6 from a certified instructor, and at least one (1) year of Critical Path Method scheduling experience using Primavera or Microsoft Project scheduling software. For an instructor to be deemed "Certified they must be certified by Oracle to train personnel in the use of Primavera P6.
3. The Project Scheduler may be a full or part time position or may be filled by a consultant. Scheduling certifications from AACE and PMI will meet the minimum requirements.
4. The Contractor may fill the Project Scheduler position using a person employed by the Contractor who is not on the project, except for meetings and other times when the Project Scheduler's presence is required on the project to satisfactorily fulfill Progress Schedule requirements of the contract documents.
5. The Contractor is not required to submit documentation to the Department to verify the Project Scheduler meets the recommended qualifications above. However, if the Engineer determines the Project Scheduler does not have sufficient skill or experience in Critical Path Method scheduling as a result of Progress Schedule submissions being substantially deficient for several submissions, or that Progress Schedule submissions are repeatedly not submitted within the required contract timeframes, the Engineer may require that the person be removed from the project in accordance with 1802 "Qualification of Workers".

A.7 File-Naming Convention

The Contractor shall use a file-naming convention as modeled in Table 1803-3. If the schedule is not accepted, the Contractor shall resubmit under the file name as modeled for the 2nd version, etc. The ####-### indicates a placeholder for the State Project Number.

Table 1803-3
Progress Schedule Filename convention

Schedules	1st Version	2nd Version	3rd Version
1st Baseline Schedule (All Schedules until it is Accepted as Baseline)	####-###-BS-1	####-###-BS -2	####-###-BS -3
1st Update to Progress Schedule	####-###-1BSU-1	####-###-1BSU-2	####-###-1BSU-3
2nd Update to Progress Schedule, etc.	####-###-2BSU-1	####-###-2BSU-2	####-###-2BSU-3
1st Revised Schedule	####-###-1RE-1	####-###-1RE-2	####-###-1RE-3
1st Update to Revised Schedule	####-###-1REU-1	####-###-1REU-2	####-###-1REU-3
2nd Revised Schedule, etc.	####-###-2RE-1	####-###-2RE-2	####-###-2RE-3
1st Impact Schedule	####-###-1IS-1	####-###-1IS-2	####-###-1RE-3
2nd Impact Schedule, etc.	####-###-2IS-1	####-###-2IS-2	####-###-2IS-3

A.8 Float Suppression / Sequestered Float

The Contractor shall not suppress or sequester float. Examples of prohibited float suppression or sequestration include, but are not limited to:

(1) Logic relationships that provide no tangible or sequential value between unrelated activities.
(2) Logic relationships that demand completion of an activity that could otherwise continue beyond a Successor's start or finish dates.
(3) Excessively long durations.

The Contractor shall obtain the Engineer's approval before using lags or leads. The Contractor shall remove any lags or leads and replace with an activity identifying the lag or lead upon the request of the Engineer, regardless of whether the Department allowed the lag or lead in a previous Progress Schedule.

The Contractor shall not be entitled to compensation or a time extension for delays that could have been avoided by revising activity durations or logic used to sequester float.

A.9 Use of Float

The Contractor acknowledges that all float (including Total Float, Free Float, and Sequestered Float) is a shared commodity available to the Project and is not for the exclusive benefit of any party. Float is an expiring resource available to accommodate changes in the Work, however originated, or to mitigate the effect of events that may delay performance or completion of all or part of the Work.

It is understood that identified contingencies, as described in 1803.3.D, "Weather and Duration Contingency", become available Float as time elapses and the contingency is not used.

S-24.3 The first sentence of the first paragraph of 1803.3.B.2 is hereby changed to read:

Baseline Schedule acceptance is a condition of NTP2 and shall not exceed **14 (fourteen)** Calendar Days from NTP1.

S-24.4 The following is hereby added at the end of 1803.3.B2:

(6) Work Break Down Structure:

Level 1 is the project level;
Level 2 shall have four nodes; MILESTONES, SUBMITTAL, CONSTRUCTION, and POST CONSTRUCTION;
Level 3 the node for SUBMITTAL activities shall have at least two sub nodes; SHOP DRAWINGS, and PROCUREMENT/FABRICATION;
The node for CONSTRUCTION activities shall be broken into nodes for various PHASES of construction work;
The node for POST CONSTRUCTION activities requires no sub nodes.
Level 4 The nodes for PHASES of Construction activities should include sub nodes for the various STAGES of work;
Level 5 The nodes for STAGES of work should include sub nodes for the various highway features: bridges, highway segments, interchanges, intersections/roundabouts, etc.;
Level 6 The nodes for highway features should be broken into their components (a bridge into components such as Piles, Substructure, Superstructure), and a highway segment into components such as pavement, drainage, earthwork, lighting, traffic signals, etc.

(7) Standard Schedule Activities to be Included:

M1060	Contractor Start Contract Work	Start Milestone
M1070	Substantial Completion	Finish Milestone
M1090	Contract Completion Date	Finish Milestone

S-25 (1806) DETERMINATION AND EXTENSION OF CONTRACT TIME

REVISED 10/29/13

The Contract Time will be determined in accordance with the provisions of MnDOT l806 and the following:

S-25.1 Construction operations shall be started on **August 11, 2014** or within eight (8) Calendar Days after the date of Notice of Contract Approval, whichever is later. Construction operations shall not commence prior to Contract Approval.

S-25.2 All work required under this Contract, except maintenance work and Final Clean Up shall be completed on or before **October 24, 2014**.

S-25.3 Construction operations involving construction field work or work that impacts, restricts, or interferes with traffic as determined by the Engineer shall not commence prior to NTP2 without written permission from the Engineer.

S-25.4 The Engineer will issue all suspension-of-work orders in writing specifying the effective date and the operations to be suspended when the flow rate of the Mississippi River is greater than or equal to 20,000 cubic feet per second at the Mississippi River Gauge near Anoka, MN (USGS 05288500). The Contractor may not resume work until so authorized in writing by the Engineer and shall resume work within a reasonable time upon the Engineer's direction. The Engineer will order the resumption of Work upon determining that the Mississippi River's flow rate has gone below 20,000 cubic feet per second at the Mississippi River Gauge near Anoka, MN (USGS 05288500) and there are no indications that the flow rate will increase above the threshold limit while the work is completed.

S-25.5 The provisions of MnDOT 1806.3(1)(3) are modified to the extent that "(3) During the inclusive period from November 15 through April 15,except as specified in 1806.1, "Determination and Extension of Contract Time, General.""; is deleted.

S-26 (1807) FAILURE TO COMPLETE THE WORK ON TIME

REVISED 03/05/14

The provisions of MnDOT 1807 are supplemented as follows:

S-26.1 The Department will assess the Contractor a monetary deduction in an amount equal to $1,000 for each Calendar Day that any of the work specified in Section S-25 (DETERMINATION AND EXTENSION OF CONTRACT TIME) of these Special Provisions remains incomplete after the expiration of the working period provided therefore.

S-26.2 The Department may reduce the daily liquidated damages to $250 when the only remaining items are maintenance or Final Cleanup.

S-26.3 For informational purposes only, bidders are advised that in addition to the requirements of MnDOT 1807, other Sections of these Special Provisions, as shown below, contain requirements for assessment of monetary deductions to this Contract:

1404	MAINTENANCE OF TRAFFIC AND (2563) TRAFFIC CONTROL
1507	UTILITY PROPERTY AND SERVICE
1706	EMPLOYEE HEALTH AND WELFARE

S-26.4 The liquidated damages set forth in MnDOT 1807 and any monetary deductions as set forth above may apply equally, separately, and may be assessed concurrently.

S-27 (1910) FUEL ESCALATION CLAUSE

The provisions of MnDOT 1910 are hereby supplemented with the attached Fuel Escalation Clause.

S-28 (2104) REMOVING PAVEMENT AND MISCELLANEOUS STRUCTURES

Abandoned structures and other obstructions shall be removed from the Right of Way and disposed of in accordance with the provisions of MnDOT 2104, except as modified below:

S-28.1 Measurement and payment for the removal and disposal of materials will be made only for those Items of removal work specifically included for payment as such in the Proposal and as listed in the Plans. The removal of any unforeseen obstruction requiring in the opinion of the Engineer equipment or handling substantially different from that employed in excavation operations, will be paid for as Extra Work as provided in MnDOT 1403.

S-28.2 All removals shall be disposed of by the Contractor outside the Right of Way in accordance with MnDOT 2104.3D3 to the satisfaction of the Engineer.

S-29 (2104) ABATE ASBESTOS-CONTAINING PIPES OR CULVERTS

REVISED 12/18/13

All asbestos-containing pipes or culverts found on the Project shall be handled according to the following provision unless otherwise directed by the Engineer. The Contractor shall comply with all applicable safety regulations imposed by federal and state law for handling pollutants, contaminants, or hazardous substances, wastes, or materials, including but not limited to 29 CFR PART 1910 and all subsequent revisions thereof. The Contractor shall file a project **Health and Safety Plan** with the Engineer at the Preconstruction Conference. **Under this provision the disturbance or removal of the asbestos containing material (ACM) will be managed as regulated asbestos containing waste material. All wet soil from cutting operations will be considered ACM and must be removed immediately as asbestos containing waste material (ACWM).**

S-29.1 ACM MANAGEMENT

(A) The Contractor shall use a MnDOT-certified abatement company for all ACM abatement-related activities as provided and described in MnDOT's "Building & Bridge Demolition/Relocation" website http://www.dot.state.mn.us/environment/buildingbridge/pdf/certified-firms.pdf . Contact Mark Vogel (651-366-3630) or Jackie Klein (651-366-3637), Office of Environmental Stewardship with any questions.

(B) The Contractor shall provide a list of all Contractor personnel performing ACM abatement work and shall provide current proof of training (MDH Asbestos Hard Card) for each individual performing ACM abatement work to the Engineer and the State's Asbestos Abatement Oversight Consultant prior to commencing any

abatement work at the site. The Contractor shall make sure all Contractor personnel performing ACM abatement work carry their MDH Asbestos Hard Cards at all times when actively performing abatement work.

(C) The Contractor shall complete and submit a MDH/MPCA asbestos abatement notification form in accordance with all MDH and MPCA requirements. The Contractor shall provide a copy of the completed form to the Engineer at the same time it is sent to the regulators. The Contractor shall provide proof to the Engineer that the MDH and MPCA have received notification of the asbestos abatement (either by facsimile receipt or certified mail) before commencing the ACM abatement.

(D) The pipe or culvert must be cut using either wet sawing, other wet operations, or a shearing technique. Torch cutting will not be allowed. Cutting debris must be maintained wet and transported in a leak tight container with proper labeling. The pipe shall be kept wet during removal operations and loading for transport. Saw-cut edges of the pipe shall be encapsulated immediately after cutting. Any pipe that is broken, or becomes broken during the handling of the material, must be wetted and kept wet until it is placed in the appropriate container for disposal. All wet soil from cutting operations or wetting of broken pipe must be removed immediately and managed as ACWM.

(E) The Contractor shall notify the Engineer a minimum of 48 hours prior to beginning ACM abatement to allow the Engineer time to arrange for the State's Asbestos Abatement Oversight Consultant to be at the site to observe and document the abatement and handling of the ACM.

(F) No removal of ACM shall take place without the approval of the Engineer, nor shall any ACM abatement work of any sort be done unless the State's Asbestos Abatement Oversight Consultant is present.

S-29.2 ACM DISPOSAL

All ACM abated from the Project Limits shall be hauled to a MPCA-permitted Municipal Solid Waste (MSW) landfill or a MPCA-permitted Industrial Landfill facility for disposal or a MnDOT approved landfill. Contact Mark Vogel, 651-366-3630 or Jackie Klein, 651-366-3637, for a list of the MnDOT approved landfills. ACM WILL NOT BE DISPOSED AT A DEMOLITION LANDFILL.

(A) The Contractor shall be responsible for providing all required information to the landfill (typically waste profile forms) in order to obtain landfill acceptance of the material for disposal. If the ACM are in an area of soil contamination, the Contractor shall also provide soil analytical laboratory reports to the landfill in order to obtain acceptance of the material for disposal. The State's soil analytical data can be obtained from the Engineer.

(B) The Contractor shall provide the completed landfill-required waste profile form(s) to the Engineer for review a minimum of two weeks prior to beginning excavation or as approved by the Engineer.

(C) ACM shall not be hauled to the landfill facility until the Engineer has a written approval (e-mail is acceptable) from the landfill accepting the material for disposal at the landfill facility.

(D) The Contractor shall haul all ACM directly from the project site to the landfill. There shall be no co-mingling of ACM from this Project with waste from other sites outside the Project prior to hauling to the landfill.

(E) The Contractor shall provide clear and legible copies of shipping papers (manifests) and landfill scale tickets (tipping receipts) for each load to the State's Environmental Consultant and Engineer daily while material is being hauled to the landfill, or as approved by the Engineer. The Contractor shall provide copies of the completed manifests signed by the landfill (third signature copies) to the State's Environmental Consultant and Engineer within 10 days after all material has been hauled to the landfill.

S-29.3 PAYMENT

When asbestos-containing pipes or culverts are encountered during excavation, the Contractor shall notify MnDOT Project Engineer who shall suspend work. The Contractor shall furnish a documented inspection and evaluation by a MnDOT approved certified MDH contractor prior to the resumption of work. All testing and, if necessary, removal of Asbestos Containing Pipes or Culverts will be paid for as Extra Work.

S-30 (2461) STRUCTURAL CONCRETE

MnDOT 2461 is hereby modified as follows:

S-30.1 MnDOT 2461.3.G.7 and 2461.3G.7.a shall be deleted and replaced with the following:

G.7 Air Content

Maintain the air content of Type 3 general concrete at the specified target of 6.5 percent (+2.0 percent and -1.5 percent) of the measured volume of the plastic concrete in accordance with 1503, "Conformity with Contract Documents."

Make any adjustments immediately to maintain the desired air content.

Measure the air content at the point of placement but before consolidation.

G.7.a Non-Conforming Material

Only place Type 3 concrete meeting the air content requirements in the work. If the Contractor places Type 3 concrete not meeting the air content requirements into the work, the Engineer will not accept non-conforming concrete at the Contract unit price.

For concrete not meeting the required air content, the Engineer will make determinations regarding the disposition, payment, or removal. The Department will adjust the Contract unit price for the Contract item of the concrete in accordance with Table 2461-17. When there is not a separate Contract unit price for *Structural Concrete* for an item of work or the concrete is a minor component of the Contract unit price, the Department will reduce payment based on a concrete price of $100.00 per cu. yd [$130.00 per cu. m] or the Contractor-provided invoice amount for the concrete in question, whichever is less.

Table 2461-17
General Concrete (Target Air Content 6.5%)

Air Content, %	Adjusted Contract Unit Price
> 10.0	The Engineer, in conjunction with the Concrete Engineer will determine the concrete suitability for the intended use in accordance with 1503, "Conformity with Contract Documents," and 1512, "Unacceptable and Unauthorized Work,"
>8.5 – 10.0	The Department will pay 75 percent of the Contract unit price for the concrete represented for material placed as approved by the Engineer.
5.0 – 8.5	The Department will pay 100 percent of the Contract unit price for the concrete represented, for material placed as approved by the Engineer.
>4.0 – <5.0	The Department will pay 75 percent of the Contract unit price for the concrete represented for material placed as approved by the Engineer.
>3.5 – 4.0	The Department will pay 25 percent of the Contract unit price for the concrete represented and placed as approved by the Engineer. If the Engineer, in conjunction with the Concrete Engineer, determines the surface is exposed to freeze-thaw cycling, coat the concrete with an approved epoxy penetrant sealer from the Approved/Qualified Products List.
≤ 3.5	Remove and replace concrete in accordance with 1503, "Conformity with Contract Documents," and 1512, "Unacceptable and Unauthorized Work," as directed by the Engineer. If the Engineer, in conjunction with the Concrete Engineer, determines the concrete can remain in place, the Engineer will not pay for the concrete and if the Engineer determines the surface is exposed to salt-brine freeze-thaw cycling, coat with an approved epoxy penetrant sealer from the Approved/Qualified Products List.

S-31 (2471) STRUCTURAL METALS

The provisions of MnDOT 2471, "Structural Metals," are supplemented as follows:

S-31.1 Delete the fourth paragraph of MnDOT 2471.3.A.2, "Certification Requirements" and substitute the following:

The Contractor/Fabricator performing coating application must demonstrate qualification by obtaining the AISC Sophisticated Paint Endorsement (SPE), the SSPC QP Certification, or a Quality Control Plan (QCP) that is acceptable to the Engineer.

S-31.2 Add the following to MnDOT 2471.3.F.1, "General":

Provide a minimum weld size per ASSHTO/AWS D1.5 and 2471, "Structural Metal," when a weld symbol is void of a weld size.

S-31.3 Add the following to MnDOT 2471.3.F.1, "General":

For the purpose of this specification, a weld repair is defined as any area of the welded product not in compliance with the WPS, approved Quality Manual or current edition of AASHTO AWS D1.5 Bridge Welding Code.

S-31.4 Delete the first paragraph of MnDOT 2471.3.H.1, "Bolt Holes," and substitute the following:

Hole forming operations other than drilling will require a written procedure in the suppliers Quality Control Plan and a verification test for each hole forming process. Produce holes after any required bending, cambering, curving, or heat-treating of member. Sub-punching or sub-drilling of holes is not permitted except where allowed by this specification.

S-31.5 Delete the third paragraph of MnDOT 2471.3.H.1, "Bolt Holes," and substitute the following:

All holes and slots produced will have hole quality that is free of sharp, torn, or jagged edges with walls square to the surface. Surface roughness of holes shall not exceed 1000 micro inches. As built holes shall have a size tolerance of -0/+1/32" when compared to as detailed.

S-31.6 Delete the title of MnDOT 2471.3.H.1.a, "Special Assembly," and substitute the following:

H.1.a Line Assembly

S-31.7 Delete the first sentence of MnDOT 2471.3.H.1.a, "Special Assembly," and substitute the following:

If the Contract requires line assembly, drill the connection holes in flange and web splices full size in the assembled position.

S-31.8 Delete the entire contents of MnDOT 2471.3.H.1.b, "Full Assembly," and substitute the following:

If the Contract requires full assembly, ensure the fabricator drills bolt holes for field connections, in all members and all components of each structural unit, from the solid to the specified size while assembled with the exception of two sub-sized holes may be used to attach each internal diaphragm to stiffeners to facilitate assembly. Use predrilled splice plates as a template only one time.

S-31.9 Delete the contents of MnDOT 2471.3.J, "Shop Assembly," and substitute the following:

Ensure the fabricator performs the following:

Complete fabrication, weld inspection, nondestructive testing, and any repairs, before placing any component in the assembly.

Adjust each assembly unit to the true field position with respect to alignment, camber, grade and skew, as shown on the plans, prior to drilling field connection. The fabricator may angularly rotate the assembly from true field position, with respect to grade, providing the fabricator supplies shop drawings showing elevations at all points of bearing and the relative position of webs of main members, with respect to true field position. Provide calculations to support the information shown in the drawings. Rotation is not allowed on hold over members.

For multiple span continuous structures, both straight and curved, progressive assembly is allowed providing a length no shorter than the length supported by three adjacent points of bearing is used as a minimum length of each structural sub-assembly. For these progressive assemblies, hold over pieces between adjoining assemblies shall be held to the following tolerances in relation to their documented position prior to removal:

(1) At point of support: Vertical +1/16", -0, Horizontal and Tilt +/-1/32"

(2) At member ends: Vertical, Horizontal and Tilt +/-1/32"

Clean metal surfaces in contact with each other before assembling. Assemble, pin, and draw together the parts of a member before drilling or bolting.

Assemble all structures that contain secondary connections utilizing full size holes in accordance with 2471.J.2, "Full Assembly".

In the assembly plan, identify maximum deviations of differential camber and sweep between girder lines.

Provide a written record of each shop assembly set-up. The inspection of the assembly and the written report shall be completed by a competent individual with experience in structural assemblies. If a total station or similar device is used to check the assemblies the operator shall be certified to a National Standard or the equipment manufacture. If a progressive assembly is used the written report shall contain all the required information for each assembly and a final written report for the full length and width of the structure. Include the following assembly dimensions, theoretical (as shown on a blocking diagram) and actual measurements with the written record:

(1) X, Y, and Z dimensions (horizontal offset, elevations, and tilt) at bearing points, ¼ span points, field splice locations, Plan ordinates closest to mid span and any other connection points.
(2) Span lengths.

Temporary bolts shall be drawn sufficiently tight to bring the required parts into bearing and to preclude loosening of the nut. The permanent bolt assembly shall be in accordance with 2402.3.G.2, "Connections Using High Strength Bolts".

Take apart assembled pieces, if necessary, to remove burrs, shavings, or other irregularities produced by the operation. Adjust the members if they have any twists, bends, and other deformations.

S-31.10 Delete the title and the contents of MnDOT 2471.3.J.1, "Special Assembly," and substitute the following:

J.1 Line Assembly

Assemble, major structural components, pedestrian truss bridges, overhead sign trusses, and modular and finger expansion joint devices at the fabrication shop, unless otherwise required by the contract. Line assemble principal members [such as but not limited to beams, girders, arches, trusses, etc.] full length with all components completely assembled.

S-31.11 Delete the contents of MnDOT 2471.3.J.2, "Full Assembly," and substitute the following:

J.2 Full Assembly

Performs full assembly as required by the Contract in accordance with the following:

(1) Assemble the main members for the complete length as required by the Contract and assemble to the full width of the structural unit,

(2) Block all members in the "no load" or "zero gravity" position unless other requirements are specified in the Contract. This shall include at a minimum, five points of support for each individual main member: ends, ¼ points and midpoint, and

(3) Include components such as diaphragms, brackets, laterals, wind frames, links, and transverse floor systems. The Department will not require components such as expansion and deflection devices and bearings to be assembled.

S-31.12 Delete the first sentence in MnDOT 2471.3.M.1, "Nondestructive Testing (NDT)," and substitute the following:

Performs NDT in areas designated in the Contract and/or the applicable welding code with the exceptions of all CJP horizontal web splices shall be Radiograph Tested (RT) 100%, all other CJP welds subject to a design load shall be Ultrasonic Tested (UT) 100% and backer bars, when used and left in place, shall be tested 100% using either RT or UT. Computed Radiography (CR) may be used in lieu of conventional radiography providing the CR procedure is approved by the Engineer.

S-31.13 Delete (1) and (2) in the second paragraph of MnDOT 2471.3.M.1, "Nondestructive testing (NDT)," and replace with the following:

(1) Any location in a rolled beam or girder where
   a. the superstructure curvature is greater than 4 degrees, and/or
   b. members are designed as an interactive 2-D structure where members are sharing or distributing load to one another, and/or
   c. that requires full assembly in fabrication.
(2) Any other tension area as shown in the Project Plan.

S-31.14 Delete the third paragraph, (1), (2), and (3) of MnDOT 2471.3.M.1, "Nondestructive testing (NDT)," and replace with the following:

Perform NDT at locations and frequencies in accordance with AASHTO/AWS D1.5, with the following modifications to the exceptions of Clause 6.7.1.2 (1):

(1) One-sixth of the web depth beginning at the point(s) of maximum tension,
(2) Also test 50 percent of the remainder of the web depth, and

(3) If the tests for (1) and (2) above find unacceptable discontinuities, test the remainder of the weld.

S-32 (2472) METAL REINFORCEMENT

The provisions of MnDOT 2472 are modified with the following:

S-32.1 Table 2472-2 is hereby deleted from MnDOT 2472.4A and replaced with the following sentence and table:

Reinforcement bars may be marked in either U.S. Customary or metric sizes. The conversion shall be made per the following table:

Table 2472-2
Reinforcement Bars
Theoretical Weights
Nominal Dimensions

U.S. Customary Bar Size	Metric Bar Size*	Diameter, *in [mm]*	Weight, *lb/ft [kg/m]*
3	10	0.375 [9.5]	0.376 [0.560]
4	13	0.500 [12.7]	0.668 [0.994]
5	16	0.625 [15.9]	1.043 [1.552]
6	19	0.750 [19.1]	1.502 [2.235]
7	22	0.875 [22.2]	2.044 [3.042]
8	25	1.000 [25.4]	2.670 [3.973]
9	29	1.128 [28.7]	3.400 [5.060]
10	32	1.270 [32.3]	4.303 [6.404]
11	36	1.410 [35.8]	5.313 [7.907]
14	43	1.693 [43.0]	7.650 [11.380]
18	57	2.257 [57.3]	13.600 [20.240]

* Bar designation numbers approximate the nominal diameter of the bar in millimeters

S-33 (2571) PLANT INSTALLATION

REVISED 01/24/14

MnDOT 2571 is hereby modified as follows:

S-33.1 MnDOT 2571.2A.2 is hereby modified as follows:

A.2 Plant Stock and Materials Documentation

(2) At least one week before plant stock delivery to the project, provide the Engineer with the following:

(2.1) A copy of a valid nursery stock, dealer or grower certificate, registered with the Minnesota Department of Agriculture (MDA), a current nursery certificate or license from a state or provincial Department of Agriculture for each plant stock supplier, or both;

(2.2) Documentation certifying that plant material shipped from out-of-state nursery vendors subject to state and federal quarantines, is free of currently regulated pests, including Emerald Ash Borers and Gypsy Moths. To determine if

Minnesota vendors are subject to quarantines, call the MDA Supervisor of Nursery Inspection and Export Certification at (651) 201-6388; and

(2.3) An updated *Certificate of Compliance*, signed by the Contractor's authorized representative.

S-33.2 MnDOT 2571.3A.1 is hereby modified as follows:

A.1 Landscape Specialist

Provide a Landscape Specialist, certified by the Department, to perform or supervise plant installation and establishment work. Provide documentation of the Certified Landscape Specialist at or before the preconstruction conference. Landscape specialists may obtain certification by completing the one-day Department Landscape Project Inspection and Administration Training Class and passing a test administered by the Department's Environmental Planning and Design and Roadside Vegetation Management Units. Full certification is valid for 3 years. Landscape Specialists may obtain provisional certification for 1 year by passing a test without completing the training class.

S-33.3 MnDOT 2571.3C is hereby modified as follows:

C Staking Planting Holes and Beds

Stake the exact locations and layouts for the Engineer's approval.

To remedy unanticipated, localized problems and seasonal conditions that may hinder plant establishment, the Contractor may request the Engineer's approval to perform the following in accordance with the standard planting details and options shown on the plans:

(1) Relocate plantings,
(2) Make plant substitutions, or
(3) Modify soil or drainage characteristics.

Locate plantings to provide the following:

(1) A clear sight distance in front of traffic signs; and
(2) Clear zones and safety sight corners and lines shown on the plans free of plants with ultimate growth diameter of 4" or greater.

S-33.4 MnDOT 2571.3G is hereby modified as follows:

G Watering

Provide watering equipment and forces on the project capable of completely watering plants as often as necessary to maintain soil moisture in the root zones.

S-33.5 MnDOT 2571.3J is hereby modified as follows:

J Cleanup and Restoration Work

(1) Remove excess materials, rocks and debris from the project:
(2) Repair turf in disturbed areas with seed mixes as shown on the plans or to match in-place turf:
  (2.1) Immediately before sowing seed or laying sod, prepare soil as specified in 2574.3 "Construction Requirements;"
  (2.2) Uniformly broadcast a Type 4 natural base fertilizer, as specified by 3881.2.B.4, "Type 4 – Natural Based Fertilizer," that provides nitrogen at an application rate of 43 lbs/acre;
  (2.3) Lay sod, or uniformly broadcast seed at 1.5 times the rate specified in Table 3876-1 "State Seed Mixes". Provide seed in accordance with the requirements

of 3876 “Seed and Perform seeding in accordance with Table 2575-1, “Season of Planting;”

(2.4) Rake and firm seeded areas to ensure seed contact with the soil; and

(2.5) Broadcast or disc anchor Type 1 mulch in all seeded areas;

(3) Install erosion control measures to prevent erosion:

S-33.6 MnDOT 2571.K.2.a is hereby modified as follows:

K.2.a All Plants

In plant establishment work, perform the following:

(1) Scout to assess the condition of the plants and the planting site and factors that may influence plant health, vigor, and establishment success. Scout these conditions at least every two weeks during the growing season and at least every month during the dormant season:

(2) Submit a written scouting report to the Engineer via email by the 1st and 15th of each month during the growing season from April to October and by the 1st of each month during the dormant season from November to March. The Engineer will use the report-frequency and content to assess plant establishment compliance. The report may include scanned copies of the plan sheets with the Contractor notes, copies of the report form found in the current edition of the ICAMMLP, or both. Include the following in the report:

(2.1) The project number;

(2.2) Engineers name;

(2.3) Name of Contractor’s responsible scout or representative;

(2.4) Dates work was performed ;

(2.5) Work locations;

(2.6) Work completed;

(2.7) Prevailing weather conditions;

(2.9) Soil moisture assessments;

(2.10) Disease problems;

(2.11) Treatment recommendations’;

(2.12) Assessment of overall plant conditions including weed competition and control.

(3) Maintain soil moisture in accordance with the watering guidelines of the standard planting details shown on the plans;

(4) Repair, adjust, or replace staking and guying, mulch material, planting soil, rodent protection, seedling tree shelters, tree paint, and other incidental items in accordance with the plans;

(5) Maintain healthy, vigorous plants free of harmful insects, fungus, and disease;

(6) Remove dead, dying, and unsightly plants. Provide and install replacement plants in accordance with 2571.2.K.2.b “Replacement Requirements;”

(7) Maintain plants in a plumb condition at the planting depth shown on the planting details in the plans;

(8) Maintain planting areas in a weed-free condition as follows:

(8.1) Remove weeds, top growth and roots, within the mulch limits by hand pulling. Pre-Water mulched areas to ensure weed top growth and roots are entirely removed. Ensure weeding operations do not contaminate the mulch or project with weed seed, weed-laden soil or propagating weed parts. Remove State and County-regulated noxious weeds to at least 5 ft [1524 mm] beyond the mulch limits. Remove weed parts or weed laden material from the project to avoid the spread of weed infestations;

(8.2) Do not spray chemicals for weed control in mulched planting areas during the PEP. The Contractor may apply a non-selective, non-residual post-emergent herbicide containing 41 percent glyphosate, as the active ingredient with a surfactant on a spot treatment basis with a brush or wick applicator. The

Contractor may also apply a broad-spectrum dichlobenil based granular, pre-emergent herbicide in accordance with product labeling and manufacturer's recommendations;

(8.3) Do not weed whip or weed clip as weed control;

(8.4) Mow turf bands around the mulch limits at least 5 ft [1524 mm] beyond the limits and at least 4 in [100 mm] high if the turf height exceeds 9 in [230 mm] adjacent to mulched planting areas ;

(8.5) Mow turf areas installed as part of the project when the growth exceeds 18 in [500 mm] high. Mow turf from 6 in [150 mm] to 12 in [300 mm] high. Control State and County listed noxious weeds;

(9) Prune to remove dead, rubbing, damaged or diseased branches, unwanted suckers, and to improve plant form and structure;

(10) Prevent or repair rutting and other damage that may lead to soil erosion and weed infestation;

(11) Perform plant establishment operation consistent with plant care and horticultural practices detailed in the current edition of the ICAMMLP; and

(12) Remove excess material, obsolete temporary erosion control devices, rocks, and debris from the project.

S-33.7 MnDOT 2571.K.2.b is hereby modified as follows:

K.2.b Replacement Requirements

Within the first year of the 2-year PEP, determine which plants need replacing. Replace dead, defective, or missing plants and incidental materials in accordance with initial installation requirements, including plants lost due to accidents, vandalism, theft, rodent damage, damage caused by the Contractor, or if ordered by the Engineer, at no additional cost to the Department. Conduct plant replacement operations during the month of May or September, based on the start of the PEP, during the first year of the PEP. At least one week before plant replacement, submit a summary report of proposed plant replacements to the Engineer. Include by attachment, copies of plan sheets with the proposed replacement quantities and locations identified and a MnDOT *Certificate of Compliance for Plant Stock, Landscape Material, and Equipment*, in the report. Using brightly colored paint, mark on site plants requiring replacement..

S-33.8 The following items are deleted from the Payment Schedule:

Item No.	Item	Unit
2571.510	Iron Sulfate	pound (kilogram)
2571.511	Iron Sulfate	ton (metric ton)
2571.512	Activated Charcoal	pound (kilogram)
2571.513	Activated Charcoal	ton (metric ton)
2571.514	Plant Hormones	gallon (liter)
2571.515	Hydrophilic Polymers	pound (kilogram)
2571.516	Mycorrhizal Inoculum	pound (kilogram)

S-34 (2573) STORM WATER MANAGEMENT

REVISED 02/04/14

MnDOT 2573 is modified as follows:

S-34.1 Delete MnDOT 2573.3.K, "Construction Exit Controls," and substitute the following:

K Construction Exit Controls

Exit Controls should be selected from the following list of stabilized construction exits:

(1) Slash mulch,

(2) Crushed rock,
(3) Sheet pads, and
(4) Rumble pad.

Provide a wheel wash off system in addition to stabilized exit controls when project site conditions warrant or when called out in plans.

Use construction exit control BMPs at exit locations to minimize vehicle tracking of sediment from the project onto paved surfaces. Install BMPs during the initial phase of the project.

Select construction exit BMP based on project site conditions, soil type, vehicle size, time of year, and duration of use. Use materials generated by the project as construction exit controls whenever possible. Maintain exit controls during the project.

Clean paved streets at the end of each working day, or more frequently as necessary to provide safety to the traveling public.

S-34.2 Delete MnDOT 2573.4.N, "Construction Exit Controls," and substitute the following:

N Construction Exit Controls

The Engineer will measure construction exit controls by the lump sum including the cost of protecting each exit over the life of the contract regardless of types or quantities for stabilized construction exits.

The Engineer will measure wheel wash off exit controls by each system installed and maintained thru the life of the contract.

S-34.3 The Unit of measure for Item 2573.501 (Bale Barrier) is changed to "linear foot [meter]".

S-34.4 Item 2573.533 is changed to "Sediment Control Log" by the linear foot [meter].

S-34.5 The following is added to MnDOT 2573.5:

J Unit Prices

The Department will pay the following unit prices for temporary sediment control items in the absence of a Contract bid price:

Bale Barrier ..... $4.10 /foot ($13.45/meter)
Silt Fence, HI ..... $3.00/ foot ($10/meter)
Silt Fence, Type MS ..... $2.00/ foot ($6.50/meter)
Silt Fence, Type SD ..... $2.00/ foot ($6.50/meter)
Sandbag Barrier ..... $6.00 square foot ($64.68/ sq meter)
Flotation Silt Curtain, Type: Still Water, 1.2 m (4 foot) depth ..... $12.50 /foot ($41.00/meter)
Sediment Trap Excavation ..... $5.50/cubic yard ($7.20/cubic meter)
Bituminous Lined Flume ..... $50.00/square yard ($59.52/square meter)
Sediment Removal, Backhoe ..... $175.00/ hour
Sediment Removal, Vacuum truck ..... $175.00 /hour
Sediment Control Log, Type Wood Fiber $4.00/foot ($13.00/meter)
Sediment Control Log, Type Rock $5.00/foot ($16.50/meter)
Flocculant Sock ..... $200 each

S-35 (2574) SOIL PREPARATION

REVISED 02/04/14

MnDOT 2574 is modified as follows:

S-35.1 Item 2574.550 is changed to "Compost, Grade ___" by the cubic yard [cubic meter].

S-35.2 The following is added to MnDOT 2574.5:

C Unit Prices

The Department will pay the following unit prices for Soil preparation l items in the absence of a Contract bid price:

Subsoiling..... $350.00 /acre ($853.65/hectare)
Soil Bed Preparation..... $200.00/ acre ($487.87/hectare)
Soil Tracking..... $134.00 /acre ($326.83/hectare)

S-36 (2575) ESTABLISHING TURF AND CONTROLLING EROSION

REVISED 04/11/14

MnDOT 2575 is modified as follows:

S-36.1 Delete MnDOT 2575.4A "Seeding", and substitute the following:

A Seeding

Seeding will be measured by the area seeded, regardless of the seed mixture or quantity of seed used, and regardless of whether the seed was furnished by the Contractor or the Department. Areas reseeded by order of the Engineer, after the original seeding of the area was accepted, will be measured and added to the area originally seeded.

S-36.2 Delete 2575.4B "seed" and substitute the following:

B Seed

The Engineer will measure seed by PLS mass of each mixture or species placed.

S-36.3 The second paragraph of MnDOT 2575.4.J is hereby deleted and replaced with the following:

The Engineer will measure Method 3 rapid stabilization will be measured by the M gallon [cubic meter] of slurry furnished and acceptably placed. Minimum measure is ½ acre [0.2 ha] and in 1/6 acre [0.07 ha] increments per area measured.

S-36.4 Item 2575.512 "Mulch Material, Type ___" is changed to Item 2575.513 "Mulch Material, Type ___".

S-36.5 Item 2575.570 is changed to "Rapid Stabilization Method ___" by the acre [hectare]

S-36.6 The following is added to MnDOT 2575.5:

M Unit Prices

The Department will pay the following unit prices for temporary erosion control items in the absence of a Contract bid price:

Disc anchoring..... $45.00/ acre ($110.00/ hectare)
Temporary Seed Mixtures
21-111, 21-112 or 21-113 ..... $1.25/ pound ($2.50 /kilogram)
22-111 ..... $2.00 /pound ($4.44/ kilogram)
Erosion Control Blanket
Category 3(wood fiber)..... $1.50/square yard ($1.78/ square meter)
Category 4..... $1.60/square yard ($1.90/ square meter)
Rapid Stabilization
Method 1..... $465.00/acre ($1162.5/hectare)
Method 2..... $800.00/acre ($1976.75/hectare)
Method 3..... $566.00/M gallon ($149.5/cubic meter)
Method 4..... $1.84/sq yd ($2.20/square meter)
Hydraulic Matrix, Type mulch $1.50/lb ($3.33/kilogram)
Hydraulic Matrix, Type Fiber Reinforced $2.00/lb ($4.4/kilogram)
Water ..... $2.00/M gallon ($0.53/cubic meter)
Mowing ..... $50.00/ acre ($125.00/hectare)
Weed Spraying ..... $162.00 /acre ($405.00/hectare)

S-37 (3137) COARSE AGGREGATE FOR PORTLAND CEMENT CONCRETE

MnDOT 3137 is hereby modified as follows:

S-37.1 MnDOT 3137.2D2(h) shall be modified to include the following:

(h)	Absorption for Class B aggregate for all concrete bridge decks and bridge rails	1.10

S-38 (3149) GRANULAR MATERIAL

MnDOT 3149 is hereby modified as follows:

S-38.1 Replace MnDOT 3149.2B with the following.

B Granular and Select Granular Materials

Provide granular materials meeting the requirements of Table 3149-1.

Table 3149-1
Granular Material Requirements

	% Passing Ratio No. 200/1 in [75 µm/25 mm]	% Passing Ratio No. 40/No. 10 [425 µm/2.0 mm]	% Passing Ratio No. 200/No. 10 [75 µm/2.0 mm]
1 Granular Material	0 – 20%	Not Applicable	Not Applicable
2 Select Granular Material	0 – 12%	Not Applicable	Not Applicable
3 Select Granular Material (Super Sand)	Not Applicable	0 – 65%	0 – 10%
4 Select Granular Material Modified 10%	0 – 10%	Not Applicable	Not Applicable

THE REMAINDER OF THIS PAGE IS INTENTIONALLY LEFT BLANK

S-39 (3733) GEOTEXTILES

REVISED 11/6/13

MnDOT 3733 is modified as follows:

S-39.1 Delete MnDOT 3733.1, "Scope," and substitute the following:

3733.1 SCOPE

Provide geotextiles (permeable fabrics) for the typical uses classified as follows:

(1) Type I for wrapping subsurface drain pipe, joints of concrete pipe culvert, or other drainage applications;
(2) Type II. The Department no longer uses this classification. If the contract specifies Type II, use Type III property requirements;
(3) Type III for use under Class I and Class II random riprap, gabions, and revet mattresses;
(4) Type IV for use under Class III and Class IV random riprap and hand-placed riprap on slopes no steeper than 3:1, horizontal to vertical;
(5) Type V for separating materials for stabilization;
(6) Type VI for earth reinforcement;
(7) Type VII for use under Class III and Class IV random riprap on slopes steeper than 3:1, horizontal to vertical, and under Class V random riprap.

THE REMAINDER OF THIS PAGE IS INTENTIONALLY LEFT BLANK

S-39.2 Table 3733-1 is hereby changed to read as follows:

B Physical Properties

Table 3733-1
Geotextile Properties

Geotextile Property	Test Method (ASTM) Units	Type (a) I Fabric	I Knit sock (b)	III	IV	V	VI	VII (c)
B1 Grab Tensile Strength minimum, each principal direction	D4632 lb [kN]	100 [0.45]	—	100 [0.45]	200 [0.90]	200 [0.90]	(d)	300 [1.3]
B2 Elongation minimum, each principal direction	D4632 percent	—	—	50	50	—	(d)	50
B3 Seam Breaking Strength minimum (e)	D4632 lb [kN]	90 [0.40]	—	90 [0.40]	180 [0.80]	180 [0.80]	(d)	270 [1.2]
B4 Apparent Opening Size (AOS) maximum (f)	D4751 U.S. Std. sieve size [mm]	40 [0.425]	40 [0.425] as applied	50 [0.30]	50 [0.30]	30 [0.60]	20 [0.85]	50 [0.30]
B5 Permittivity minimum (g)	D4491 falling head sec^{-1}	0.7	2.75 relaxed	0.5	0.5	0.05	0.05	0.5
B6 Puncture strength minimum	D6241 lb [N]	—	180 [800]	—	—	—	—	—
B7 Wide Width Strip Tensile Strength minimum each principal direction	D4595 lb/ft [kN/m]	—	—	—	—	—	(d)	—

(a) Minimum Average Roll Values (MARV) based on average of at least three tests per swatch.
(b) Provide socks made of knit polymeric materials and meeting the requirements of ASTM D6707-06, for Type H: fabric. Ensure the sock exhibits minimum snag or run potential, is factory-applied to maintain uniform installed mass, and conforms to the outside diameter of the tubing with a snug fit.
(c) Needle-punched nonwoven. Do not use thermally bonded (heat-set) fabric.
(d) Requirements are site-specific and will be as specified in the contract. The property values for B1 and B3 may not be less than shown for Type V. If the contract does not specify either B1 or B7, use a default value of 300 lb [1.3 kN] for B1. If the contract does not specify seam strength, use a default value of 270 lb [1.2 kN] for B3.
(e) Adhere to this requirement if the contract requires or allows seams. Strength specifications apply to factory and field seams. Use thread for sewing that has strength of at least 25 lb [110 N]. Sew seams with a Federal Type 401 stitch using a two-spool sewing machine, and install seams facing upward. For seaming with adhesives, see the Approved/Qualified Products List available at the Department's website.
(f) For U.S. sieve sizes, the AOS Number must be equal to or greater than the number specified.
(g) Permittivity: P = K/L, where K = fabric permeability and L = fabric thickness.

S-40 (3882) MULCH MATERIAL

The provisions of MnDOT 3882 are supplemented and/or modified with the following:

S-40.1 Add the following paragraph at the end of MnDOT 3882.2 Type 6:

Gradation test samples are required for Type 6 Mulch (tub-ground, hammer-milled or mechanically chipped wood). Submission of one Type 6 mulch sample will be required for gradation test per 1,000 cubic yards and must be specific to every individual source/supplier of Type 6 mulch that the Contractor intends to use on the Project.

S-41 FINAL ESTIMATE AND FINAL PAYMENT

The following provisions shall apply to preparation of the Final Estimate and execution of Final Payment under this Contract:

S-41.1 FINAL ESTIMATE

State Law provides that the final estimate will be made within 90 days after completion of all work required under this Contract. If, however, the total value of the Contract exceeds $2,000,000.00, the 90 day requirement will not apply and the time allowed for making such final estimate shall be 180 days after the work under this Contract has been, in all things, completed to the satisfaction of the Commissioner.

S-41.2 FINAL PAYMENT

If this Contract contains a "Disadvantage Business Enterprise or Targeted Group Business" goal, the following requirement shall apply:

"Before final payment is made, the Contractor shall also complete an affidavit showing the total dollar amounts of work performed by disadvantaged business enterprise (DBE) and targeted group business (TGB) and/or veteran-owned small business."

SB-1 **SCOPE OF WORK**

Bridge 2440 repair work includes Piers 1, 2 and 5 foundation vertical surface repair near the water line of the piers and void repair near bedrock at Piers 1 and 5. Work types involve two basic categories: Foundation Repair (labeled Reconstruction for payment terminology) is defined as concrete repair extending to bedrock, and Concrete Surface Repair is defined as repairs concentrated around the waterline or above. Concrete Surface Repair work involves removing deteriorated and poor quality concrete from the vertical face of each pier, installing anchorages, placement of reinforcement, and placing new concrete to form a surface repair as indicated in the plans and closely matching the proportions of the original structure.

Foundation repair work at Piers 1 and 5 involves encapsulating the damaged area and grouting any voids at Pier 5. The encapsulating effort includes removing poor quality concrete and sediment from the void and spalls, installing anchorages into the existing concrete, installing concrete grout filled fabric bags (grout bags) to facilitate encapsulation, tying a vertical mat of reinforcement to the anchorages, placing concrete by tremie (designed to not disperse in water) into the formed encapsulation, and grouting any voids between newly formed concrete and the existing concrete.

For repairing the void below Pier 5, an additional step will take place after the encapsulation concrete has cured. This will involve drilling 2” or 3” diameter holes from the top of the footing into the void area. These holes will facilitate pressure grouting the void(s) and other concrete fractures at the concrete footing-bedrock interface. The installation of the concrete encapsulation structure is designed to repair large undercut areas and facilitate a seal around the footing that would otherwise be unsealable with grout. The concrete with aggregate seal is intended to limit grout spoils in the river and provide armor against further undercutting.

The work described is planned to be staged by barge with intermittent use of the bridge deck above to convey some materials. The contractor may install a temporary scaffold around the piers while working on the surface repairs which will aid in material recovery and reduce field personnel reliance on underwater diving equipment.

Sediment and debris removal may involve jetting or vacuum equipment and sediment bags. Turbidity and pH will be monitored and is required to be mitigated by the contractor throughout the project duration. The void, encapsulation area and grout bag area shall be clean of all sediment, loose concrete debris, timber or vegetative matter. Within the void exposed timber shall be cut and removed. Unsound concrete shall be removed within 4 feet of the surface of the pier.

SB-2 **BRIDGE PLANS**

Limited existing Bridge 2440 plans are available at the Minnesota Department of Transportation, Bridge Office, 3485 Hadley Ave N, Oakdale, MN, 55128, for review and inspection by bidders; electronic copies are also available for viewing, printing and downloading on the MnDOT Consumer Access EDMS (Electronic Document Management System) at http://dotapp7.dot.state.mn.us/cyberdocs_guest/. However, the state neither warrants nor represents that existing structures conform exactly to the details shown in those plans.

SB-3 **(1513) RESTRICTIONS ON MOVEMENT AND STORAGE OF HEAVY LOADS AND EQUIPMENT**

The Contractor shall haul Materials and move and store equipment in accordance with the Highway Traffic Regulation Act and applicable provisions of Minnesota Rules when using public Roads or completed Structures, base courses, and pavements within the Project that are open to traffic and becoming a part of the permanent improvement.

The Contractor shall comply with legal load restrictions and with special restrictions required by the Contract when hauling or storing Materials and moving or storing equipment on Structures, completed Subgrades, base courses, and pavements within the Project, under construction or completed but not yet open to traffic.

The Contractor shall complete and place a cab card in each vehicle used for hauling bituminous mixture, aggregate, batch concrete, and grading material (including borrow and excess) before starting work. This cab card shall identify the truck or tractor and trailer by Minnesota or prorated license number and shall contain the tare, maximum allowable legal gross mass, supporting information, and the signature of the owner. The Contractor shall make the card available to the Engineer upon request. The Contract Unit Prices include Contractor-related costs in providing, verifying, and spot checking the cab card information, including weighing empty and loaded trucks on certified commercial scales.

The Contractor shall not operate equipment mounted on crawler tracks or steel tired wheels on or across concrete or bituminous surfaces unless otherwise approved by the Engineer. The Contract requirements may impose special restrictions on speed, load distribution, surface protection, and other precautions.

When construction operations require crossing an existing pavement, Bridges, or completed portions of the Pavement Structure with otherwise prohibited equipment or loads, the Contractor shall use Department-approved methods of load distribution or bridging at no additional cost to the Department.

The Contractor will not be relieved of liability for damages resulting from the operation and movement of construction equipment because of the issuance of a special permit, or by adherence to any other restrictions imposed.

Unless otherwise required by the Contract or approved by the Engineer, the Contractor shall not temporarily store or park construction materials and equipment on a Bridge deck during construction.

If the Contractor determines it is necessary to temporarily stockpile materials on the bridge deck and that operation is approved by the Engineer, the Contractor shall submit the proposed loads and structural analysis of the deck and superstructure certified by a Professional Engineer to the Bridge Engineer for the Bridge Engineer's review within a minimum of 7 calendar days before placement of loads.

SB-4 **(1706) EMPLOYEE HEALTH AND WELFARE**

The provisions of 1706, "Employee Health and Welfare," are supplemented as follows:

The Contractor shall submit a plan at the preconstruction conference providing all OSHA required safety equipment (safety nets, static lines, false decks, etc.) for all work areas whose working surface is 6 feet [1.8 meters] or more above the ground, water, or other surface. Submittal of this plan will in no way relieve the Contractor of his/her responsibility for providing a safe working area.

All safety equipment, in accordance with the Contractor's plan, must be inplace and operable in adequate time to allow Department personnel to perform their required inspection duties at the appropriate time. Don't place concrete in any areas affected by such required inspection until the inspection has been completed.

The installation of safety lines, safety nets, underwater lines or protection or other systems whose purpose is to reduce the hazards of bridge or underwater work may require the attachment of anchorage devices to beams, girders, diaphragms, bracing, piers or other components of the structure. Clamp type anchorage systems which do not require modification of structural members may be used, provided they do not interfere with proper execution of the work; if using an anchorage system which requires modification of structural members, request approval, in writing, for plan modifications as provided in MnDOT specifications. Requests to install systems which require field welding or drilling of primary stress carrying members of a bridge will not be

approved. The Contractor shall indicate any portions of anchorage devices which will remain permanently in the structure.

On both ends of each pier cap extending 6 feet [1.8 meters] or more above the ground, the Contractor shall install an insert or other suitable anchorage to which safety lines can be attached. Remove any portion of said device extending outside the finished lines of the pier cap unless otherwise approved by the Engineer. The Contractor shall repair or seal any void or cavity resulting from the installation or removal of this device to prevent the ponding or entry of water as directed by the Engineer.

The Contractor shall furnish, install and remove approved anchorage systems at no increased cost to the state for materials, fabrication, erection, or removal of the bridge component or anchorage system.

SB-5 **(1709) NAVIGABLE WATERWAYS**

Perform all work on navigable waterways in accordance with 1709, "Navigable Waterways," and the following:

All work on or in navigable waters is subject to regulations formulated by the United States Coast Guard, Army Corps of Engineers, and the Department of Transportation.

Prepare plans showing the location and dimensions of proposed cofferdams and other temporary construction which may directly or indirectly affect navigation clearances or impede or divert stream flow, as well as proposed method of furnishing, installing, operating and maintaining temporary navigation lights.

Forward 8 sets of prints to the Commander (DWB), Eighth Coast Guard District, 1222 Spruce Street, St. Louis, Missouri 63103 for approval. When approval has been obtained from the Coast Guard, furnish two sets of prints with such approval noted thereon to the Project Engineer.

Monthly flow duration curves are provided for the months of July, August, September, October, November and December. See Figure 1 after SB-5. These curves are based on information provided by the United States Geological Service (USGS) for the Mississippi River near Anoka with a period of historical data of over 80 years. These curves provide an indication of the probability of various monthly flows based on historical data. Also provided is a spillway rating curve for the Horseshoe spillway and the Hennepin Hydro Plant. This information is provided for the benefit of the Contractor, however, MNDOT does not assume responsibility for any assumptions made based on the information. Individual years can vary significantly.

The Horseshoe dam has a normal flashboard elevation of 798.6 and a normal pool elevation of 798.8 to provide a nominal amount of water to go over the spillway. The Horseshoe dam has a length of 1952 feet. The Hennepin Island Power Plant, owned and operated by Xcel Energy, has a maximum flow capacity through the turbines of approximately 4,300 cubic feet per second (cfs). The plant operation staff are normally at the facility from 7AM – 3PM Monday –Friday. The plant phone number is 612-330-6166. The contractor shall develop a protection and safety features that allows safe operation with the plant hydro operating and total river flows below 12,000 cfs.

Don't start construction that requires approval of the above noted governmental agency until notice of approval has been furnished to the Project Engineer.

The contractor is solely responsible for safety on the site. Coast Guard approval of the location and dimensions of cofferdams and other temporary construction does not in any way relieve the Contractor of his/her responsibility for providing adequate and safe construction; nor does it in any way alter requirements for forwarding plans of cofferdams and other temporary construction to the Project Engineer for approval as to type of construction.

All costs incurred by compliance with the above requirements are considered incidental expense for which no direct compensation will be made.

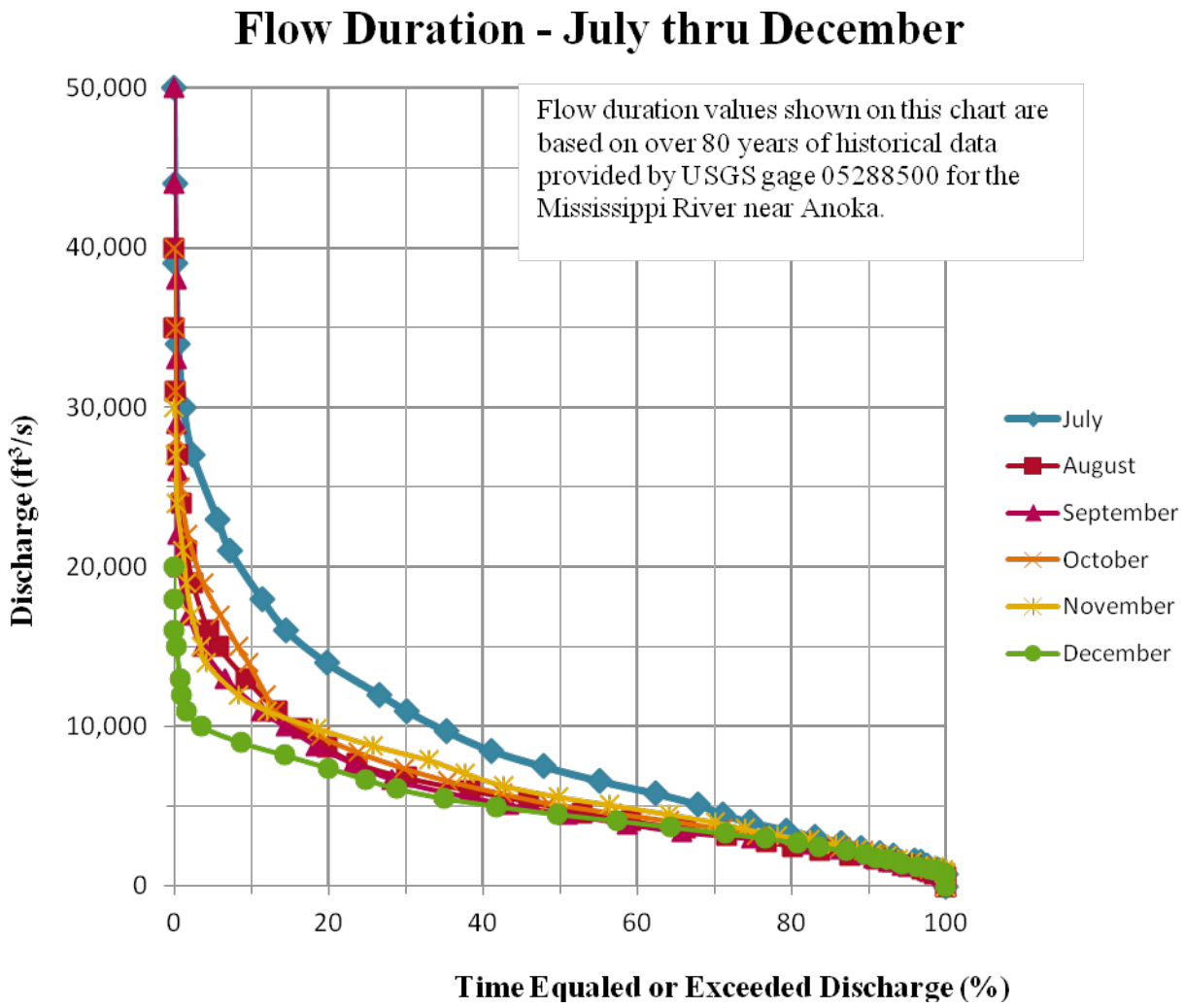

Figure 1 Mississippi River Flow Durations for July through December

SB-6 **(1717) AIR, LAND, AND WATER POLLUTION**

The provisions of 1717, "Air, Land, and Water Pollution," are supplemented as follows:

The Contractor's attention is hereby directed to MPCA Rule 7011.0150 (http://www.pca.state.mn.us) as it relates to sandblasting and/or concrete removal operations.

As described below, all sediment disturbed by the project shall be removed from the site and disposed of according to applicable codes and permits. The use of filter bags to separate water from the solids shall be employed. Turbidity is to be managed and mitigated as defined in SB-6.1 and as directed by the Engineer.

For water jetting of the sediment within the void below Pier 5, a vacuum system (or other approved by the Engineer) shall be employed to collect the resulting debris-filled water which shall then be passed through a filter bag prior to discharging back in to the river. Collected solids shall be disposed of according to applicable codes and permits.

Water discharged back into the river shall be run through a diffuser (or other process approved by the Engineer) in such a manner to not create a sediment plume or increase river turbidity.

SB-6.1 Turbidity and pH Measurement and Mitigation

The Contractor shall prevent turbidity into the water in the Mississippi River as a result of construction operations. Turbidity shall be construed to mean more than 25 NTUs above the receiving water or conveyance system, as measured by a Nephelometric Turbidity Unit (NTU) portable meter within 150 feet of the source. Chemical flocculation of natural origin materials and treatment train and containment systems will be required. pH of the discharge water will be measured and will need to match the receiving water before discharge. The Office of Environmental Services will provide technical support for the Engineer.

Additional methods to prevent turbidity from leaving the project site may include "soft-wall coffers" and/or silt curtains.

SB-6.2 Failure to Mitigate Turbidity and pH

If turbidity and pH cannot be acceptably controlled during construction, the Contractor shall change construction operations until satisfactory results of visibly clean and 25 NTU or less above the background receiving waters or conveyance system water are obtained. The Contractor shall suspend operations, if ordered by the Engineer, until the issue is resolved. Failure to adequately control turbid water discharge as ordered by the Engineer, or cease operations if ordered by the Project Engineer will result in a $2,000 per calendar day deduct until corrective actions are successful.

SB-6.3 Basis of Payment

Payment for monitoring turbidity and pH shall be included in price bid for 2104.601 "REMOVE MISCELLANEOUS DEBRIS" which shall be compensation in full for all costs including labor, equipment, and materials for performing all turbidity and pH monitoring and mitigating operations as specified as well as costs assigned elsewhere in these special provisions.

SB-7 (1903) INCREASED AND DECREASED QUANTITIES

The provisions of MnDOT 1903 are modified such that no unit price adjustment will be made for increased or decreased quantities for the following items:

Item No.	Description
2104.601	REMOVE MISCELLANEOUS DEBRIS
2401.541	REINFOREMENT BARS (STAINLESS STEEL)
2433.602	GROUTED REINF BARS (STAINLESS STEEL)
2433.607	CEMENT GROUT
2433.618	CONCRETE SURFACE REPAIR
2433.618	CONCRTETE SURFACE REPAIR TYPE 1
2433.618	CONCRETE SURFACE REPAIR TYPE 2

SB-8 (2104) REMOVE MISCELLANEOUS DEBRIS

This item includes the removal and disposal of all sediment, loose concrete, timber, and miscellaneous detritus around Piers 1, 2, and 5 required to facilitate reconstruction and repair of the footing and footing seals as shown in the plan. In addition, this item also includes the removal of a large spall located on the upstream end of Pier 1.

Estimated sediment quantities to be removed from the project site are 225 cubic yards at Pier 1 and 235 cubic yards at Pier 5.

Dispose of all materials removed in accordance with 2104.3.C, "Removal Operations".

SB-8.1 Basis of Payment

Payment for Item No. 2104.601 “REMOVE MISCELLANEOUS DEBRIS” will be made at the Contract Lump Sum price shall be compensation in full for all costs of removing and disposing of sediment and debris as described in the plans and herein, including any water filtering, turbidity monitoring in accordance with SB-6, and all incidentals thereto. No compensation or adjustment of payment will be provided for variation in estimated sediment, estimated concrete or estimated debris removal quantities provided within the plans or these special provisions.

SB-9 (2433) STRUCTURE RENOVATION

The provisions of 2433, "Structure Renovation," are supplemented with the following:

SB-9.1 Reconstruct Foundation Type 1

A. Description of Work

This work consists of repairing Piers 1 undercut footing seal and providing an encapsulation seal which is cast directly on bedrock. Undercut and deteriorated concrete areas are shown in plans are to be contractor verified in the field. Perform the work in accordance with the applicable provisions of MnDOT 2433, MnDOT 2461, the Plans, as directed by the Engineer, and the requirements described herein.

Consolidate with adequate vibration to remove all air and voids from the cavities formed within the pour.

B. General

A special Contractor-designed underwater pumped mix for the encapsulation structure on Pier 1 will be required in accordance with SB-9. A demonstration placement for verification will be required in a water tank capable of 2 CYD of material having minimum dimensions of 3-ft deep by 8-ft tall and 8-ft wide. This demonstration may be combined with mix demonstrations requirements of SB-8.5.2. The mock-up placement shall include a section of the undercut encapsulation section repaired under this SB as well as the narrow tremied concrete surface repair stipulated in SB-8.5. The mock-up shall illustrate the ability to place the tremie or pumped concrete without mixing with the water. See SB-12 “STRUCTURAL CONCRETE” for details.

All underwater concrete placements shall be completed in strict accordance with ACI Manual of Concrete Practice, section 546.2R-04, entitled “Guide to Underwater Repair of Concrete” using pumped concrete. The use of a “free dump through the water” is expressly prohibited. Due to the limited depth of the repair, a pumped concrete is required to ensure placement against undercut surfaces. The concrete shall not be dropped washed or moved through the water. In addition, any exposed concrete shall be protected from the flow of water sufficient to wash or remove the cement past or other portion of the plastic concrete. The use of an Anti-Washout Admixture (AWA) to reduce the potential for the cement paste to wash or dissolve into the water is required. Such admixture shall be demonstrated that it has been accepted by USACE for underwater use as well as a specification CRD-C661 for AWA. Vibration of the concrete shall be performed from within the mass of plastic concrete and should not be performed on the surface where the cement and surrounding water are intermixed.

All work shall be performed by staff with a demonstrated background of 3 years of similar work history with documentation detailing construction experience. The contractor shall develop a detailed work plan and schedule for the performance of the work. The work plan shall provide specific times for the Engineer to schedule and provide underwater inspection services following the preparation of the area, installation of any grout pipes and cored holes, preparation of the area, installation of any grout bags/formwork, inspection of reinforcing and during the placement of the underwater concrete, installation formwork, and during the pressure grouting operation. The Engineer may elect to waive inspection in the presence of sufficient documentation at each stage.

Prior to placing concrete, clean all voids as stated in SB-7. Undercut area shall be kept free of sand, sediment and organic materials until grouting. Place vent holes sized to properly allow suspended materials and water to exit the formed cavity during the concrete placement or grouting process.

C. Quality Control

The contractor shall submit a Quality Control (QC) plan and procedures for acceptance to the Engineer. The plan shall include measures to ensure bond of new concrete to old concrete in the undercut area as well as corrective procedures in the event voids, poor quality concrete, or separation of surfaces are encountered.

D. Basis of Payment

Reinforcement and anchorage costs are paid for under separate items.

Payment for Item No. 2433.601 "RECONSTRUCT FOUNDATION TYPE 1" will be made at the Contract price per Lump Sum and shall be compensation in full for all costs of furnishing all labor, materials, any concrete grout bags, forms and equipment necessary to satisfactorily complete the work. Payment includes Structural Concrete materials and placement including all requirements of SB-8 for the corresponding concrete placement, quality control plan and corresponding actions including any associated testing services for quality control, Payment includes all QC procedures deemed necessary to ensure placed concrete is free of voids.

SB-9.2 Reconstruction Foundation Type 2

A. Description of Work

This work consists of repairing Piers 5 footing voids and providing an encapsulation seal which is cast directly on bedrock. Undercut and deteriorated concrete areas are shown in plans are to be contractor verified in the field. This work also includes repairing (grouting) any voids below the Pier 5 footing. Perform the work in conjunction with SB-10 and in accordance with the applicable provisions of MnDOT 2433, MnDOT 2461, the Plans, as directed by the Engineer, and the requirements described herein.

Consolidate with adequate vibration to remove all air and voids from the cavities formed within the pour.

B. General

A special Contractor-designed underwater tremie mix or pumped mix for the encapsulation structure on Pier 5 will be required in accordance with SB-9. A demonstration placement for verification will be required in a water tank capable of 2

CYD of material having minimum dimensions of 3-ft deep by 8-ft tall and 8-ft wide. This demonstration may be combined with mix demonstrations requirements of SB-8.5.2. The mock-up placement shall include a section of the undercut encapsulation section repaired under this SB as well as the narrow tremied concrete surface repair stipulated in SB-8.5. The mock-up shall illustrate the ability to place the tremie or pumped concrete without mixing with the water. See SB-12 "STRUCTURAL CONCRETE" for details.

Pressure grouting of undercut areas will be required for voids not completely filled by tremie or pumped concrete placement. To limit the potential to split any newly cured concrete the maximum pumping pressure shall be limited to 70psi gauge.

All underwater concrete placements shall be completed in strict accordance with ACI Manual of Concrete Practice, section 546.2R-04, entitled "Guide to Underwater Repair of Concrete" using tremie or pumped concrete. The use of a "free dump through the water" is expressly prohibited. During placement all concrete shall be placed within the mass of of the plastic concrete. The concrete shall not be dropped washed or moved through the water. In addition, any exposed concrete shall be protected from the flow of water sufficient to wash or remove the cement past or other portion of the plastic concrete. The use of an Anti-Washout Admixture (AWA) to reduce the potential for the cement paste to wash or dissolve into the water is required. Such admixture shall be demonstrated that it has been accepted by USACE for underwater use as well as a specification CRD-C661 for AWA. Vibration of the concrete shall be performed from within the mass of plastic concrete and should not be performed on the surface where the cement and surrounding water are intermixed.

Pressure grouting of the potential void beneath the Pier 5 footing utilizing High Mobility Grout will be required. The grout placement will consist of initial, or primary grouting, and secondary, or verification grouting. See SB-10 "HIGH MOBILITY GROUT" for details.

All work shall be performed by staff with a demonstrated background of 3 years of similar work history with documentation detailing construction experience. The contractor shall develop a detailed work plan and schedule for the performance of the work. The work plan shall provide specific times for the Engineer to schedule and provide underwater inspection services following the preparation of the area, installation of grout pipes and cored holes, preparation of the area, installation of grout bags/formwork, inspection of reinforcing and during the placement of the underwater concrete, installation formwork, and during the pressure grouting operation. The Engineer may elect to waive inspection in the presence of sufficient documentation at each stage. Additional grouting pipes or vent holes shall be added based as deemed necessary by the contractor's work plan and experience. Pressure grout repair to the satisfaction of the Engineer.

Prior to grouting, clean all voids to be grouted as stated in SB-7. Void area shall be kept free of sand, sediment and organic materials until grouting.

Drill angled exploration holes to the voids from areas above water as indicated in the Plans and as per the approved contractor work plan. Exploration holes shall be cored and not hammer-drilled unless approved by the Engineer. During grouting inspect angled exploration holes to verify grout is at top of void and penetrating drill hole. Upon verification, those holes may be used to pump grout in from the top. Place vent holes sized to properly allow suspended materials and water to exit the grouted cavity during the grouting process. Grout shall be wasted in grouting voids until all discharge is grout with no indication of water or air. At the completion of grouting any vent holes shall be sealed.

Place grout in accordance with the applicable sections of the ACI Manual of Concrete Practice, section 546.2R-04, entitled "Guide to Underwater Repair of Concrete" using pumped grout. The grout shall be pumped from the bottom center of the void, extending from both sides in a continuous mass until the void is completely filled in one operation. If the angled drilled holes indicate that the grout is at the top of the void, those hole may be used to pump grout in from the top. At the two ends of the void vent hole shall be placed at the top of the void. During pumping grout shall be wasted until all discharge is grout with no indication of water or air. At the completion of grouting all vent holes shall be closed. The grout shall not be dropped, washed or moved through the water. In addition, any exposed grout shall be protected from water flow sufficient to wash or remove the cement paste from the plastic grout. The use of an Anti-Washout Admixture (AWA) to reduce the potential for the cement paste to wash or dissolve into the water is required. Such admixture shall be demonstrated that it has been accepted by USACE for underwater use as well as a specification CRD-C661 for AWA. To limit the potential to "jack" the concrete pier the maximum pumping pressure shall be limited to 70psi gauge.

C. Quality Control

Following the completion of the pressure grouting operation and after the grout has achieved at least 75% of the final design strength, four 4-inch diameter minimum cores shall be taken in locations representative of the void area. These cores shall capture the concrete/grout interface to the bedrock/grout interface. The contractor shall secure an independent testing firm to report the compressive strength of the grout, the bond adhesion to the concrete, and any presence of voids. The independent testing firm shall provide photographic documentation of the cores noting the material transitions, any voids and potential width, and foreign materials.

Secondary grouting is required through test core locations or other approved locations after initial grout has attained 1500 psi compressive strength. Secondary grouting materials shall conform to the requirements of SB-10. Secondary grouting will not be compensated for grout volumes up to 5% of the primary pressure grouting. Grouting volume beyond 5% and up to 20% of initial grouting will be paid for under 2433.607 "CEMENT GROUT" at the Contract price per cubic yard and shall be compensation in full for all costs of furnishing all labor, materials, and equipment necessary to satisfactorily complete the work. In the event secondary grouting reaches 20%of initial grouting or beyond, no compensation will be paid for grouting volume 20% or beyond because the Engineer will deem intitial grouting as unacceptable work under provisions of MnDOT 1513.

D. Basis of Payment

Reinforcement and anchorage costs are paid for under separate items.

Payment for Item No. 2433.601 "RECONSTRUCTION FOUNDATION TYPE 2" will be made at the Contract price per Lump Sum and shall be compensation in full for all costs of furnishing all labor, materials, any concrete grout bags, forms and equipment necessary to satisfactorily complete the work. Payment includes Structural Concrete materials and placement including all requirements of SB-8 for the corresponding concrete and grout placement, core sample acquisition and testing services, Payment includes High Mobility Grout, Cement Grout within pay limits as defined within the special provisions,. verification report and all incidentals associated with the defined work not directly identified elsewhere.

SB-9.3 Grouted Reinforcement Bars (Stainless Steel)

Furnish and install each anchorage in accordance with the applicable requirements of 2433, "Structure Renovation," and the following:

Use stainless steel reinforcement anchorages that meet the relevant stainless steel material requirements SB-11.1 and 3385.

Install anchorages into sound concrete to a depth of 12 inches unless directed otherwise by the Engineer. Ensure adhesive anchorages consist of a stainless steel reinforcement secured by an adhesive or mortar. Adhesive material shall be suitable for underwater application and be listed on the MnDOT Approved/Qulaified Products List. Appropriate adhesives include:

UltraBond 365	**HY-150**	**Red Head Epcon A7**
Adhesives Technology Corp	Hilti Fastening	ITW CCNA

Prior to performing production anchorage installation at bridge piers, the contractor shall demonstrate the procedure for anchorage installation to the Engineer in a submersed environment or tank on a vertical face. A minimum of 3 anchors shall be installed during the demonstration. A technical representative for installation of the selected adhesive from the adhesive manufacturer shall be present during the demonstration to verify the proper procedures are employed. After demonstrating the anchorage pull-out tests shall be performed to a value of 12 kips.

Payment will be made as 2433.602 "GROUTED REINF BARS (STAINLESS STEEL)", at the contract price per each, which shall include all costs of furnishing, testing, demonstrating, and installing the anchorages.

SB-9.4 Concrete Surface Repair

SB-9.4.1 Description of Work

This work consists of repairing spalled and deteriorated concrete surfaces located above water at the arch springline of Pier 1. Perform the work in accordance with the applicable provisions of MnDOT 2433, the Plans, as directed by the Engineer, and the requirements described herein.

SB-9.4.2 Shotcrete Processes

Shotcrete shall be furnished and applied by the *wet-mix* process. The *wet-mix* process consists of thoroughly mixing all ingredients, except accelerating admixtures, including the mixing water, and introducing the mixture into the delivery equipment to be air-jetted from the nozzle at high velocity onto the substrate surface. Additional descriptive information can be found in the American Concrete Institute ACI 506R “Guide to Shotcrete.”

The Contractor may propose an alternate method of repair that provides the same or better concrete strength, durability, resistance to abrasion and chloride penetration, and limited shrinkage as the shotcrete method. Any alternate must be approved by the Engineer prior to use on the Project.

SB-9.4.3 Shotcrete Specifications

Shotcreting shall conform to all applicable requirements of "Specification for Shotcrete (ACI 506.2-95)” and as referenced herein to “Guide to Shotcrete (ACI 506R-90)” contained in the latest edition of the ACI Guide to Concrete Practice, Part 5 published by the American Concrete Institute (ACI); and the following special provisions:

SB-9.4.4 Submittals for Shotcreting Operations

Submit the following written documentation at least 10 days prior to commencement of shotcreting operations:

A. Qualifications of Shotcrete Work Crew

The shotcrete crew foreman shall have had at least five years experience in shotcrete repair work on projects of similar size and character. Provide five references of those responsible for supervision of similar projects. Include name, address and telephone number of references who will testify to the successful completion of these projects by the shotcrete crew foreman.

Nozzle operators shall have successfully completed three projects of similar size and character. Provide three references of those responsible for supervision of these projects. Nozzle operators shall also pass a test, described in SB-8.4.8C, demonstrating their competence.

B. The application process that will be used (wet), a description of the proposed method of application, and a description of the mixing and application equipment.

C. Details of proposed shotcrete mixture(s), including proportions and means of supply, and test results of compressive strength of concrete specimens for mix designs proposed by the Contractor.

D. A description of the proposed curing procedures and protection to be provided to shotcrete.

E. A description of the proposed quality control testing program. Testing of shotcrete work shall be in accordance with the requirements of ACI 506.2.1.6 Quality Assurance, or as otherwise specified.

Note the time required for this testing and approval process in developing the testing schedule. Carry out the tests at curing temperatures expected to be encountered in the field.

The Engineer will either approve or reject the Contractor's submittals within 10 calendar days after receipt of the complete submission. Wall construction will not be allowed to begin nor materials incorporated into the work until the submittal requirements are satisfied and found acceptable to the Engineer. Resubmit for approval, any changes or deviations required by the Engineer. No adjustments in Contract time will be allowed due to incomplete submittals.

SB-9.4.5 Materials

A. Portland cement shall conform to 3101, Type I. Air entrainment is not required.

B. Water shall conform to 3906.

C. Fine aggregate shall be natural siliceous and consisting of hard, clean, strong, durable and uncoated particles, conforming to the requirements of ASTM C 33. Gradation shall be even from fine to coarse and shall be within the following limits:

Sieve Size	**Percent Passing**
9.50 mm **(3/3 inch)**	100
4.75 mm **(#4)**	95-100
2.36 mm **(#8)**	80-100
1.18 mm **(#16)**	55-85
600 µm **(#30)**	25-60
300 µm **(#50)**	10-30
150 **(#100)**	2-10

D. Reinforcement for surface repair shall be stainless steel. See SB-11.1.

E. No admixtures, except air-entraining admixtures and water reducers, shall be added to the shotcrete *without* approval of the Engineer. Admixtures shall contain no chlorides or other materials corrosive to steel or materials that may cause other detrimental effects such as cracking or spalling. A documented history of demonstrated satisfactory performance in a mix of similar proportions shall be submitted to the Engineer.

F. Handle, transport and store all *dry* shotcrete material with adequate provisions for the prevention of absorption of moisture. Maintain ambient temperatures in a temperature range of 40º F to 85º F.

SB-9.4.6 Shotcrete Proportioning

The Contractor is responsible for shotcrete mixture proportioning. Submit the following information to the Engineer for review and approval per SB-15.4.

A. An easily identifiable mix designation, number or code.

B. Aggregate Source, Gradation, Relative Bulk Density and Absorption.

Proportion shotcrete to meet the following minimum performance requirements:

TEST DESCRIPTION	**TEST METHOD**	**AGE (Days)**	**SPECIFIED REQUIREMENT**
Min. Compressive Strength (psi)	ASTM C 39 ASTM C 42	7 28	3000 4000
Max. Boiled Absorption, % Max Volume of Permeable Voids, %	ASTM C 642	7 7	8 17

Make allowances for the shooting orientation and rebound in shotcrete mixture proportioning.

SB-9.4.7 Supply and Equipment

A. Shotcrete Placing Equipment

Wet-mix placing equipment shall include a clean, dry, oil-free supply of compressed air sufficient for maintaining adequate nozzle velocity at all times. The equipment shall be capable of delivering the premixed material accurately, uniformly and continuously through the delivery hose.

SB-9.4.8 Quality Assurance and Quality Control Testing

A. Quality Control Testing

Establish and maintain a quality control program for all shotcrete work. Such a program shall include, but not be limited to the following:

1. Maintenance of test records for all quality control operations;

2. Wash-out testing of dry-bagged premix materials to check cementitious content and aggregate gradation.

3. Physical testing of the hardened shotcrete.

B. Preconstruction Trials

Implement a preconstruction trial to enable the Engineer to evaluate conformance of the proposed materials, shotcrete mixture, equipment and crew to the Project specifications. Acceptance of the preconstruction trial results by the Engineer is required prior to performance of any work on the Project.

C. Construction Testing

Shoot a single construction test panel for the repair work by *each* nozzle operator. The test panel shall be shot in the same position as the work being done.

Produce a test panel in accordance with the requirements of ASTM C 1140, but with minimum dimensions of 18 inches x 18 inches x 4 inches deep and be constructed of wood and sealed plywood; with 45º sloping edge forms to permit escape of rebound. There shall be no reinforcement or embedments within the panel.

The construction test panel shall be stored, handled and cured in accordance with 2461.4A5. After curing, the panel shall be cored or cut to provide compression test specimens as described below.

Cut 3-inch diameter core compressive strength test specimens from the test panel--with length/diameter ratios preferably 2:1 and not less than 1:1; or 3-inch cubes. Provide two test specimens.

Conduct compressive strength tests in accordance with ASTM C 42. The mean compressive strength for a set of two specimens shall equal or exceed f'_c. Correct compressive strengths to equivalent 2:1 cores, using the core correction factors in C 42. Test one specimen at age 3 days and one specimen at age 28 days.

SB-9.4.9 Preparation for Shotcreting

A. Surface Preparation of Concrete

The Engineer will locate and outline all loose, spalled and deteriorated concrete to be removed. Exercise care so as to not damage areas of sound concrete or reinforcing steel during concrete removal operations. Unless specifically directed by the Engineer, depth of removal shall not exceed 12 inches.

Accomplish concrete removal using one or more of the following methods:

1. Chipping with hand picks, chisels or light duty jackhammers not to exceed 15 pounds;

2. Scarifiers, scabblers or other suitable mechanical means; and/or

3. High-pressure (14,500 to 40,000 psi) water jetting.

If sound concrete is encountered before existing reinforcing steel is exposed, prepare and repair the surface without further removal of concrete. When corroded reinforcing steel is exposed, continue concrete removal until there is a minimum one-inch clearance around the exposed corroded reinforcing bar. Take care to not damage bond to adjacent non-exposed reinforcing steel during the concrete removal process.

Taper the perimeter of all areas where concrete is removed at an approximate 45º angle, except sawcut the outer edges of all chipped areas to a minimum depth of 1/2-inch, or as shown on the plan, to prevent feather edging, unless otherwise approved by the Engineer.

After all deteriorated concrete has been removed; prepare the repair surface to receive shotcrete by high-pressure (14,500 to 40,000 psi) water jetting. The repair surface shall have an adequate surface roughness determined as three peak-to-valley measurements of 3/16 inch.

Remove by high-pressure water jetting all fractured surface concrete and all traces of any unsound material or contaminants such as oil, grease, dirt, or any materials which could interfere with the bond of freshly placed shotcrete.

Apply shotcrete to cleaned areas within 48 hours, or shall be re-blasted. The contractor may also propose a formed and placed concrete placement option.

Dispose of all material removed in accordance with the requirements of 2104.3C3.

B. Reinforcement

Use the following method for reinforcing the 5’ X 3’ spall on the north face of the Pier 5 footing only (all other areas repaired as shown on plan):

Clean any inplace reinforcement exposed during surface preparation by high-pressure jetting to remove all loose rust and concrete, but not necessarily to white metal. Remove remaining dust and loose concrete with compressed air or high-pressure water jetting.

Augment inplace reinforcement displaying deep pitting or loss of more than 20% of cross-ectional area with additional reinforcement as directed by the Engineer. Remove and replace loose reinforcement with equal size bars. Provide minimum lap splice length of all replacement and new reinforcement as detailed in the Plans. In the case of lapped splices, do not bundle bars, but place bars such that the minimum spacing around each bar is three times the maximum aggregate size or 0.75 inch, whichever is larger, to allow for proper encapsulation with shotcrete.

Provide steel fabric at each repair area larger than 1.0 square feet if the depth of the repair exceeds 3 inches from the original surface of the member to be repaired. Steel fabric shall meet the greater of the **replacement of deteriorated bars or the minimum reinforcement requirement for the thermal and shrinkage for the removed concrete volume**. Lap the sheets of adjoining fabric at least one and one-half spaces at all intersections. Minimum shotcrete cover on steel fabric shall be 2 inches. Fasten the fabric to preset anchors or existing reinforcing using 16 or heavier gauge tie wire on a grid not more than 12 in square. Use minimum of four anchors any given area requiring anchors. Avoid any large knots of tie wire which could result in sand pockets and voids during shotcreting. The minimum clearance between reinforcing bars and steel fabric shall be 0.75 inch.

C. Alignment Control and Cover

Implement alignment control to establish control that will ensure maintaining the minimum specified shotcrete thickness and reinforcement cover. Accomplish the alignment control by means of shooting wires, guide strips, depth gauges or forms. Submit to the Engineer the proposed means of alignment control for review and approval. Shooting wires (ground wires) shall consist of high-strength steel wire (piano wire) kept taut during shotcreting. Remove shooting wires after completion of shotcreting and screeding operations.

Guide strips and forms shall be of such dimensions and installation configuration so as to not impede the production of uniform, dense, properly consolidated shotcrete. Do not use any installations that will be conducive to the formation of sand pockets.

SB-9.4.10 Shotcrete Application for Surface Repair

A. General

Apply shotcrete in accordance with good practice as detailed in Chapter 8, Section 8.5 of ACI 506R. In particular:

1. Operate the nozzle generally operated at a distance of 1.5 to 5 feet from the receiving surface and orient at right angles to the receiving surface, except as required to fill corners, cover edges and encase large diameter reinforcement bars.

2. Optimize the combination of air pressure at the nozzle, moisture content of the shotcrete and the distance of the nozzle from the receiving surface to achieve maximum compaction of the shotcrete.

3. Take care while encasing reinforcement and steel fabric to keep the front face of the reinforcement clean during shooting operations so that shotcrete builds up from behind to encase the reinforcement and prevent voids and sand pockets from forming.

4. Continuously remove accumulations of rebound and overspray by the blowpipe operator in advance of the deposition of new shotcrete. Do not reuse rebound

material.

B. Surface Repair

The Engineer shall inspect and approve all concrete surface areas to be repaired prior to application of any shotcrete. All shotcrete shall be placed in the dry and may not be used underwater.

The day before shotcreting, saturate the concrete substrate within the areas to be repaired and then re-wet prior to shooting. At least one hour prior to application of shotcrete, flush all surfaces to be shotcreted with water. Allow wetted surfaces to dry back to a saturated-surface-dry condition prior to application of shotcrete. If necessary, use a blowpipe to facilitate removal of surface water. Only oil-free compressed air may be used in the blowpipe. In the event a work stoppage longer than two hours takes place on any shotcrete layer prior to the time it has been built up to required thickness, re-wet the surface prior to continuing. Do not apply shotcrete to a dry surface or to a surface with free water.

Bring the shotcrete to an even plane and to well-formed corners by working up to ground wires or other guides, using a lower-than-normal placing velocity.

Do not apply shotcrete during periods of rain or high wind, which could interfere with the shotcrete stream unless suitable protective covers, enclosures or wind breaks are installed.

Exercise care to protect adjacent surfaces from build-up of rebound and overspray. Rebound will not be permitted in the completed work. Remove hardened rebound and hardened overspray prior to application of additional shotcrete using sandblasting, chipping hammers, high-pressure water blasting or other suitable techniques.

Repair shotcrete surface defects as soon as possible after placement. Remove and replace shotcrete which exhibits segregation, honeycombing, lamination, voids, or sand pockets. In-place shotcrete determined not to meet the specified strength requirement will be subject to remediation as determined by the Engineer. Possible remediation options include placement of additional shotcrete thickness or removal and replacement, all at the Contractor’s expense.

Thoroughly clean the delivery equipment at the end of each shift. Remove any build-up of coatings in the delivery hose and nozzle liner.

Protect the shotcrete if it must be placed when the ambient temperature is below 50º F and falling or when it is likely to be subjected to freezing temperatures before gaining sufficient strength. Maintain cold weather protection until the in-place compressive strength of the shotcrete is greater than 725 psi. Cold weather protection includes blankets, heating under tents, or other means acceptable to the Engineer. The temperature of the shotcrete mix, when deposited, shall be not less than 50º F or more than 95º F. Terminate shotcrete application if the ambient temperature rises above 85º F, unless the Contractor adopts special hot weather shotcreting procedures that are approved by the Engineer.

If the prevailing ambient conditions are such that the shotcrete develops plastic shrinkage and/or early drying shrinkage cracking, terminate shotcrete application and take the following action:

1. Reschedule the work to a time when more favorable ambient conditions prevail; and/or

2. Adopt corrective measures, such as installation of sun-screens, windbreaks, surface evaporation retardants or fogging devices to protect the work.

SB-9.4.11 Shotcrete Finishing

Build up the surface of the shotcrete slightly and trim to the final surface by cutting with the leading edge of a sharp trowel. Remove any imperfections by floating with a rubber float. Limit work done to the finished surface to correcting imperfections caused by cutting with the trowel. Accomplish final finishing by using a wood float for a preliminary finish, with the final finish using a rubber float. Trim back all shotcrete and overspray from adjacent non-prepared concrete surfaces.

The final shotcrete surface shall not vary more than 3/8-inch from a straight line in any direction between adjacent inplace surfaces. Transitions on all surfaces shall be smooth and not abrupt. Changes or sharp edges will be permitted to remain. Diamond grinding may be used to bring the hardened surface into tolerance, but the ground surface must not result in an objectionable appearance after final surface finishing, as determined by the Engineer.

SB-9.4.12 Shotcrete Curing

On completion of finishing of a repaired area, prevent shotcrete from drying out by immediately fogging, wetting or applying curing compound. Once shotcrete has attained final set, keep it continuously moist or cure for a minimum period of 3 days. Accomplish moist curing using one or more of the following procedures:

1. Wrap the elements in wet burlap, which has been presoaked in water for 24 hours prior to installation. Wrapping the wet burlap in plastic is useful for retarding the rate of drying of the burlap.

2. Install sprinklers, soaker hoses or other devices to keep the shotcrete surface continuously, wet. The use of intermittent wetting procedures that allow the shotcrete to undergo wetting and drying during the curing period will not be allowed.

3. Apply a masonry coating to serve as a curing compound.

SB-9.4.13 Shotcrete Acceptance

Shotcrete that does not conform to these special provisions may be subject to rejection either during the shotcrete application process, or on the basis of tests on the test panels or completed work.

Deficiencies observed during the shotcrete application process, such as, but not limited to:

1. Failure to properly control and remove build-up of overspray and rebound;

2. Incomplete encasement of or incomplete consolidation around reinforcement bars, steel fabric or anchors;

3. Incorporation of sand lenses, excessive voids, delaminations, sags, rebound, and sloughing; or

4. Failure to apply shotcrete to the required surface tolerance

Whenever possible, perform all remedial work to correct deficiencies while the shotcrete is still plastic.

Repair or remove shotcrete that is determined by the Engineer to be defective or non-conforming to the Project specifications based on evaluation of cores from the finished shotcrete. Replace the shotcrete at no cost to the Department. Repairs of non-conforming shotcrete are subject to the same testing, evaluation and acceptance criteria as the original repair shotcrete.

SB-9.4.14 Shotcrete Repair

Remove while still plastic shotcrete that is identified as being non-conforming using spades, scrapers or other suitable mechanical devices. High-pressure water jetting may be used, subject to acceptable disposal of the removed shotcrete.

Remove hardened shotcrete that is identified as being non-conforming using the same basic procedures used for removal of deteriorated concrete. Take care to avoid damage to reinforcement, steel fabric or anchors. Replace any embedment damaged during the shotcrete removal process at no cost to the Department.

Place, finish, cure and protect repair shotcrete in the same manner specified for all shotcrete work. Apply curing from approved products list to all exposed concrete surfaces of repaired areas. The Contractor shall bear the costs of all repair and tests for non-conforming shotcrete.

SB-9.4.15 Method of Measurement

Measurement will be by area in square feet of concrete surface repaired as indicated in the Plans, and other areas that have been specifically designated and/or approved by the Engineer for repair by this method. Work outside of these designated areas will not be measured for payment.

For this Project:

- Repairs to the arch surface at the Pier 1 springline are identified as "CONCRETE SURFACE REPAIR"

SB-9.4.16 Basis of Payment

Payment for Item No. 2433.618 "CONCRETE SURFACE REPAIR" will be made at the Contract price per square foot and shall be compensation in full for all costs of repairing the designated deteriorated concrete surfaces as described herein, including new reinforcement, and all incidentals thereto.

SB-9.5 Concrete Surface Repair Type _____

This work shall consist of removal and repair of concrete footing surfaces as designated in the Plans and as follows:

- Piers 1 and 2 deteriorated concrete and penetrations into concrete footing from a depth 2.5 ft below water line and higher.
- Pier 5 deteriorated concrete and penetrations into concrete footing from a depth 5 ft below water line and higher.

SB-9.5.1 Remove Concrete

Perform this work in accordance with the requirements of 2433 and accordance with the following:

A. Construction Requirements

At least 21 days prior to starting removals, submit to the Engineer plans and sequencing detailing the repair process. Include sequence of tasks, estimated task timeframes, temporary works, equipment employed, staging areas, materials and personnel. Identify

hold points for work execution as defined herein and coordinate inspection access with the Engineer.

After working platform or access has been established, provide the Engineer access to Engineer determine the removal locations. Remove only those portions have been marked or otherwise designated for repair by the Engineer. Removal shall be done according to the Specifications, as directed by the Engineer, and as shown in the Plan. Remove and dispose of all designated areas of delaminated or unsound concrete in accordance with the following requirements and as directed by the Engineer:

Restrict removal and disposal to methods which, in the Engineer's judgment, will not damage the structure.

All damage to other portions of the structure which are to remain in place which is due to the Contractor's operations shall also be repaired at the Contractor's expense.

Do not perform removal in any area until the perimeters for removal in that area have been agreed upon by the Engineer for that type of removal. Leave any reinforcement steel in place as it was before concrete removal, unless otherwise ordered by the Engineer. Repair and/or replace all reinforcement bars by Contractor’s operations, as directed by the Engineer, at the Contractor's expense. All damage to other portions of the structure which are to remain inplace which is due to the Contractor's operations shall also be repaired to the satisfaction of the Engineer at the Contractor's expense.

Dispose of all materials removed in accordance with 2104.3.C, "Removal Operations". Concrete shall not be disposed of in the river.

B. Concrete removal to 6” depth or less

Perform work in accordance with the requirements of Section A above and remove and dispose of portions of the concrete footing up to and including a depth of 6”.

C. Concrete removal greater than 6” in depth

Perform work in accordance with the requirements of Section A and B above. Remove and dispose of that portion concrete footing which the Engineer specifically designates for Type 2 removal after Type 1 removal has been performed. Type 2 removal includes all removal which the Engineer designates after the Type 1 removal. The minimum depth of Type 2 removal is 1 inch [25 mm] beyond the maximum depth designated as Type 1 removal.

D. Measurement

Measurement of each type of concrete footing removal will be based only on that area, in ft^2 [m^2], designated by the Engineer for removal. Areas of Type 2 removal will <u>not</u> be subtracted from areas designated as Type 1 removal. Measurement will only be included for areas bonded, patched with concrete and free of voids.

SB-9.5.2 Repair Concrete

After all removals have been made and inspected by the Engineer, install stainless steel reinforcement and stainless steel reinforcement anchorages in accordance with the Plans and SB-8.3 and meeting requirements of SB-11.1.

At Pier 5 Concrete Surface Repairs Type 1 and Type 2 near waterline, apply epoxy bonding grout prior to placing concrete. The contractor shall propose and submit an epoxy bonding grout to the Engineer for approval. Provide manufacturer data sheets and referrals to underwater repairs made with the product that have been in service for over 5 years. Referrals shall include the owners name, contact personnel, location of repair, and date of installation.

Provide mix design in accordance with SB-9. Place approved mix by tremie or pump placement. Consolidate with adequate vibration to remove all air and voids from the cavities formed within the pour. Vibration of the concrete shall be performed from within the mass of plastic concrete and should not be performed on the surface where the cement and surrounding water are intermixed.

All underwater concrete placements shall be completed in strict accordance with ACI Manual of Concrete Practice, section 546.2R-04, entitled "Guide to Underwater Repair of Concrete" using tremie or pumped concrete. The use of a "free dump through the water is expressly prohibited. During placement all concrete shall be placed within the mass of the plastic concrete. The concrete shall not be dropped washed or moved through the water. In addition, any exposed concrete shall be protected from the flow of water sufficient to wash or remove the cement past or other portion of the plastic concrete. The use of an Anti-washout admixture (AWA) to reduce the potential for the cement paste to wash or dissolve into the water is required. Such admixture shall be demonstrated that it has been accepted by USACE for underwater use as well as a specification CRD-C661 for AWA.

All work shall be performed by staff with a demonstrated background of 3 years of similar work history with documentation detailing construction experience of underwater concrete placement to the satisfaction of the Engineer. Develop and submit a detailed work plan and schedule for the performance of the work. The work plan shall provide specific times for the Engineer to schedule and provide underwater inspection services following the concrete removal, anchor installation, reinforcement placement, formwork and concrete placement. The Engineer may elect to waive inspection in the presence of sufficient documentation at each stage.

SB-9.5.1 Basis of Payment

Reinforcement anchorages and stainless steel reinforcement are paid for separately.

Payment for Item No. 2433.618 "CONCRETE SURFACE REPAIR TYPE __" will be made at the Contract price per square foot and shall be compensation in full for all costs of repairing the designated deteriorated concrete surfaces as described herein, excluding reinforcement, and all incidentals thereto.

SB-10 (2461) STRUCTURAL CONCRETE

The provisions of MnDOT 2461 are modified and supplemented as follows:

SB-10.1 Contractor Mix Design

Propose for acceptance a contractor concrete mix for each unique repair area in accordance with MnDOT 2461 and the following:

- Meet or exceed a 4000 psi 28-day compressive strength
- The air content shall be 6.5 percent plus 2.0 percent or minus 1.5 percent at the point of placement.

Submit mix design to the Engineer at least 21 days before trial placement.

A minimum of two weeks prior to the actual pour, a demonstration placement for verification will be required in a water tank capable of 2 CYD of material having minimum dimensions of 3-ft deep by 8-ft tall and 8-ft wide. This demonstration may be combined with mix demonstrations requirements of SB-8.1 and SB-8.5.2. The placement should emulate the anticipated tremie or pumped concrete repair and include thin formed areas as well as undercut portion of hardened concrete. The mock-up placement shall include a section of the undercut encapsulation section under SB-8.1 as well as the narrow tremied concrete surface repair stipulated in SB-8.5. Final approval of the mixture is based on satisfactory mock placement and performance.

The Contractor shall verify strength and consolidation results by casting and testing strength specimens as well as coring four 4" diameter minimum cores at a minimum length of 12" into the demonstration pour interface with hardened concrete . The number of cast cylinders (sets of 3) required shall be mutually agreed upon be the Engineer and Contractor.

Perform all testing of concrete after admixtures have been added to the concrete mixture.

SB-10.2 Basis of Payment

Payment for Structural Concrete, contractor mix design, trial placement, testing and all incidentals described in SB-9 are incidental to the repairs in which the concrete is used.

SB-11 HIGH MOBILILTY GROUT

SB-11.1 Description of Work

A. The Work covered by this Section consists of furnishing all materials, labor, and equipment needed for the injection of High Mobility Grout (HMG) to fill any voids that may exist between the Pier 5 footing and the limestone bedrock.

B. The amount of grouting to be performed cannot be precisely predicted and will depend upon the nature of the void(s) encountered as the work proceeds. The Contractor shall grout under pressure any voids in the Pier 5 concrete footing as determined by the Engineer. Grouting shall be performed at such locations, at such inclinations, to such depths, and in such quantities as shown on the Plans or as directed or approved by the Engineer.

SB-11.2 Reference Documents

A. Work shall conform to the version of each of the following reference standards that was current as of the date of the Agreement.

1. ASTM C 191 Standard Test Method for Time of Setting of Hydraulic Cement by Vicat Needle.
2. ASTM C 940 Standard Test Method for Expansion and Bleeding of Freshly Mixed Grouts for Preplaced-Aggregate Concrete in the Laboratory
3. ASTM C 1107 Standard Specification for Packaged Dry, Hydraulic-Cement Grout (Nonshrink)
4. API RP 13A Oil-Well Drilling Fluid Materials
5. API RP 13B Recommended Practice Standard Procedure for Field Testing Water-Based Drilling Fluids, Density by Mud Balance, Marsh Funnel and Pressure Filtration Test.

SB-11.3 Submittals

A. At least 21 days prior to beginning any grouting work, Contractor shall submit the resume of the project manager, site superintendent, and drilling and grouting foreman who will be responsible for the supervision and direction of the Contractor's grouting work.

B. Void Grouting Execution Plan
   1. Submit a Void Grouting Execution Plan at least 21 calendar days prior to the start of any grouting operations. The Plan shall fully describe the proposed grout plant, equipment, materials, grout mix designs including admixtures, and grouting procedures for grouting work being performed. The Plan shall also describe the Contractor's proposed sequence of grouting, as well as other items of work as appropriate.
   2. The plan shall include, at a minimum:
      a. A list of all grouting equipment, including manufacturer's specification sheets, that Contractor proposes to use in the Work.
      b. Grout mix design details for all grout mixes proposed for use in the Work.
      c. A description of the grouting procedure and sequence.
      d. A description of the computer monitoring system that will be used to monitor and record the grouting parameters. The description shall include examples of all report types and data plots that are typically developed using the software.
      e. Examples of all log sheets and other forms that will be used to document the Work.
      f. The type and frequency of quality control testing that Contractor will perform.
      g. A description of the emergency grouting techniques that will be used to control unacceptable seepage or piping. The description shall include a listing of all materials and equipment that will be used, including manufacturer's product sheets, as well as the location where materials and equipment will be stored on site.
   3. The Engineer shall have the right to require the Contractor to make changes to the Void Grouting Execution Plan including, but not necessarily limited to, grouting equipment, grouting procedures, mix design, injection pressures, data recording forms and data reports, whenever the Engineer determines that such changes are necessary to satisfy the intent of the Work.

C. For the grout mix design submit:
   1. Aggregate source (if any) and test results.
   2. Certificate of cement compliance.
   3. Specification sheets for any admixtures.
   4. Results of all quality control tests.

D. Submit the following grouting records within one calendar day of completion of a stage or grout hole:
   1. Void stage grouting records including:
      a. Hole or grout pipe number, date, and stage depth interval.

b. Hydrostatic pore pressure measured immediately prior to grouting.
c. Grout pressure data including maximum pressure (pounds per square inch) at collar for each stage.
d. Total time hole injected (minutes) for each water/cement ratio.
e. Refusal pressure.
f. Total gallons each type of grout mix in each stage.

2. Grout hole data summary records shall include graphic plots on profiles and/or cross sections showing:
a. Grout take, by mix type and by stage.
b. Hydrostatic pore pressure prior to grouting.
c. Total time of grouting per stage.
d. Date grouted.
e. Any connections, leakages, or other relevant observations.

SB-11.4 Quality Control

A. The Contractor shall provide experienced grouting personnel in all positions supervising grouting work. Grouting work shall be under the supervision and direction of an individual with a minimum of 15 years in responsible charge of grouting for construction similar in nature to that required by this work. All other supervisory personnel must have a minimum of 10 years similar experience. The Contractor shall maintain sufficient qualified personnel to perform the required drilling and grouting work, including data collection and processing of all results. All drilling and grouting shall be performed in the presence of the Engineer.

B. The Contractor shall perform the following tests for each grout mix proposed for use at the site prior to beginning the production grouting work. The final grout mixes tested shall be prepared on site using the equipment that will be used for the grouting work. All grout mixes shall be prepared and all testing shall be performed in the presence of the Engineer. Additional testing shall be performed if a new mix design is proposed after grouting has begun.
1. Specific gravity using a baroid mud balance in accordance with API RP 13B.
2. Viscosity using a Marsh funnel in accordance with API RP 13B. Viscosity shall be measured within two minutes after the grout is mixed.
3. Bleed in accordance with ASTM C 940.
4. Pressure filtration testing in accordance with API RP 13B.
5. Unconfined compressive strength of at least five (5) cube specimens in accordance with ASTM C 1107.
6. Initial set time in accordance with ASTM C 191.

C. During the grouting work, the Contractor shall perform the following tests in the presence of the Engineer:
1. Specific gravity using a baroid mud balance in accordance with API RP 13B at least daily and whenever the grout mix is changed.
2. Viscosity using a Marsh funnel in accordance with API RP 13B at least daily and whenever the grout mix is changed. Viscosity shall be measured within two minutes after the grout is mixed.
3. Bleed in accordance with ASTM C 940 at least weekly for each mix type batched. Bleed shall not exceed 2 percent.
4. Unconfined compressive strength in accordance with ASTM C 1107.
5. Initial set time in accordance with ASTM C 191.
6. Pressure filtration in accordance with API RP 13B at least weekly for each mix type batched.
7. Viscosity, specific gravity, and pressure filtration coefficient values shall be within 10 percent of the values determined during mix design testing.

D. Verification Holes
1. Verification holes shall be drilled in the footing after grouting is completed to aid in evaluating the effectiveness of the grouting work.
a. Three verification holes shall be drilled on the south side of the footing.
b. Three verification holes shall be drilled on the north face of the footing.
2. Holes shall be added at the Engineer's discretion in areas where initial verification holes are inconclusive or where the Engineer judges additional information is needed.
3. All verification holes shall be inspected with the borehole camera or other method acceptable to the Engineer, probed with the CPT device, and grouted in accordance with these specifications.

SB-11.5 Quality Assurance

A. Contractor shall submit the results of all quality control testing to the Engineer daily.
B. Contractor shall submit the results of all grout injection monitoring as specified in section SB-10.11.
C. Engineer shall have the right to direct the Contractor to conduct additional testing whenever the Engineer judges necessary for quality assurance purposes.
D. Engineer shall have the right to conduct independent quality assurance testing whenever the Engineer judges necessary. Contractor shall cooperate with the Engineer to facilitate collecting test specimens and performing the tests.
E. Engineer's interpretation of Contractor's test results, Contractor's grout injection records, and Engineer's independent inspection and test results will form the final basis for acceptance of the Work.

SB-11.6 Materials

A. Void Grout:
1. Void Grout shall consist of a mixture of water, cement, sand, a viscosity modifier, and a superplasticizer.
a. Water used to mix grout shall be free of excessive amounts of salts or other impurities that adversely affect the set or hydration of the cement in the grout mixture.
b. Cement shall conform to the requirements of ASTM C-150 Type I or Type II portland cement. Other types of cement may be used subject to the Engineer's approval.
c. See MnDOT 3126 for sand specifications.
d. Superplasticizer shall consist of naphthalene sulfonate such as Rheobuild 1000 as supplied by Masterbuilders, or approved equal, with the ability to enrobe the particles in the suspension grout with a film that imparts an identical negative charge to all particles.
e. Viscosity Modifier shall consist of a natural soluble, high molecular weight bipolymer, such as Welan Gum, as produced by Kelco, or approved equal, which enhances the stability of the suspension grouts, meeting the following criteria when added at a ratio of 0.1 percent (by weight of cement) to the base formulations is for regular cement-based suspension grouts:
i. Nominal increase in viscosity at high shear rate.
ii. Does not adversely affect strength.
iii. Substantially increases cohesion and viscosity of grout at low shear rates or at rest.
2. Sufficient quantity of all materials shall be on hand to ensure that grouting operations will not be interrupted or delayed. Materials shall be stored and protected at all times so that the quality of the materials is maintained.
3. Cement may be delivered to the site in bags or by bulk delivery. Bulk-delivered cement shall be stored in appropriate silos or other containers specially designed

for cement storage. Cement storage facilities shall be subject to the Engineer's approval.

4. All grout mix components shall be compatible with each other and shall be used in conformance with the manufacturer's recommendations.

SB-11.7 Grout Mix Design

A. Mix designs shall be developed by the Contractor and submitted to the Engineer for review and approval.

B. Grout mixes shall be stable with less than 5 percent bleed as determined by ASTM C 940 and a pressure filtration coefficient less than 0.1/min1/2 measured using an applied pressure of 100 psi.

C. Grout shall achieve an initial set within 46 hours, and develop a minimum compressive strength of 2500 psi. at 28 days.

SB-11.8 Equipment

A. Pressure Packers

1. Packers used for void grouting shall consist of mechanically expanded rings of rubber, leather, or other suitable material attached to the end of the grout supply pipe. Packers expanded by internal gas or fluid pressure shall not be used.
2. Packers shall be designed so that they can be expanded to seal the drill holes at the specified depths and, when expanded, shall be capable of withstanding, without leakage, the hydrostatic pore pressures plus a grout pressure equal to the maximum grout pressure to be used, for the entire period of time in which the packer is in use.
3. The Contractor shall have available at all times, a sufficient number and variety of packers to accomplish the grouting.

B. Piping

1. Pipe for void grouting shall be standard weight, schedule 40 black steel conforming to the requirements of ASTM A 53.
2. Pipe fittings shall be malleable iron or steel fittings conforming to the requirements of ASTM A 197 or A 234 respectively.
3. Pipe from the grout plant to the manifold and return lines shall be minimum 1-inch diameter.
4. Down hole pipe, if any, shall be minimum ¾-inch diameter and may be any flexible pipe capable of withstanding twice the maximum pump and/or grouting pressure.

C. Grout Plant

1. The apparatus for mixing and placing void grout, including circulating line and fittings, shall be of a type and size that is capable of mixing and pumping the grout mixes anticipated for this work and the specified pressures. Equipment shall be capable of effectively mixing grout and forcing it into the grout holes or grout connections in a continuous, uninterrupted flow at any specified pressure up to the maximum required pressure.
2. The grout mixer shall be of the high-speed, colloidal-type equipped with a high-speed, diffuser-type centrifugal mixing unit of sufficient capacity to produce grout at the rate required by the holes being injected, without interruption due to mixer breakdown. Water supply to the mixer shall be adequate at all times to provide the required pumping rate. The mixer pump shall be capable of delivering 50 gallons per minute at 20 psi, and shall be fitted with an accurate water meter, reading cubic feet to tenths of a cubic foot, for controlling the amount of mixing water used in the grout. The water meter shall be of sufficient accuracy so that the error during normal operation shall not exceed 1 percent.
3. A holdover mechanical agitator tank twice the volume of the mixer shall be provided. The grout pumps shall be connected directly to the holdover

mechanical agitator tank. The agitators shall be fitted with baffles to reduce vortex formation.

4. The grout pump shall be a helical-screw rotor-type (Moyno pump) that produces uniform flow without pulsation. The pump shall have a minimum capacity of 30 gallons per minute and a maximum pressure capability sufficient to produce a pressure of 100 psi at the collar of the most distant hole from the pump.
5. Sufficient stand-by equipment, hose and fittings shall be available to continue grouting without interruption in the event of failure. A standby grout pump, capable of being placed in operation with no more than 15 minutes notice, shall be included as part of the grout plant.
6. Suitable provisions shall be made for passing grout through a U.S. Standard No. 16 screen as it is discharged from the mixer to the holdover tank. The arrangement of the screen shall be such that grout from the manifold return line can be passed over the screen. The screen shall be readily accessible for cleaning and replacement.
7. The Contractor will be required to test and as necessary calibrate the water meters at the grout plant at any time the Engineer believes the equipment does not meet specifications. Equipment found to be defective shall be replaced immediately or grouting operations shall be suspended until the equipment is functional. Testing and calibration procedures shall be demonstrated by the Contractor prior to grouting start up.
8. The grouting equipment shall be maintained and shall be capable of continuous and efficient performance during any grouting operation. The arrangement of the grouting equipment shall be such as to provide a supply line and a return line from the grout pump to the grout hole.
9. A manifold consisting of a system of valves and a pressure gauge shall be used to permit continuous circulation, accurate control, and monitoring of grouting pressure, bleeding, and regulation of flow into the grout holes, and permit grouting of interconnected holes if required.
10. All pressure gauges for use in grouting shall be glycerin filled, with pressure indicated in psi and with a minimum dial face size of 2 ½-inch-diameter. The rating of each pressure gauge shall not be more than 3 times the pressure at which the grout is anticipated to be pumped for the stage being grouted. All gauges shall be accurate to no more than 2 percent error over the full range of the gauge. Pressure gauges shall be equipped with approved gauge savers when pumping grout. The gauges, with attached gauge savers, shall be checked once per shift to assure their accuracy. Defective gauges or gauges with broken glass faces shall be replaced immediately. Where pressure transmitters are used to transmit pressure to the remote data acquisition system, an analog pressure gage as described above shall be located immediately adjacent to the pressure transmitter.
11. All valves shall be ball valves and shall have minimum 6-inch lever handles permanently fixed to the valves that clearly show the position of the valves.
12. Adequate standby equipment shall be available in order to ensure that no interruptions to continuous grouting of any given stage occur.
13. All equipment shall be maintained in a clean and functional condition.
14. Effective means of communication shall be maintained between personnel at the hole, at the pumps, and the personnel operating and monitoring the electronic monitoring control system.

SB-11.9 Preparation

A. All grouting operations shall be performed in the presence of the Engineer or designated Owner's Representative.

B. Make all necessary provisions for collection and control of water, grout, and waste materials to comply with applicable environmental permitting requirements.

SB-11.10 Grouting Requirements

A. The location, spacing, direction, and depth of the grout holes foreseen are shown on the Plans. The actual location, spacing, direction, and/or depth of any grout hole may vary from that shown depending upon the conditions encountered in the field.

B. All holes, including holes drilled for verification of grouting effectiveness, shall be grouted, regardless of whether the hole probing and inspection showed an open void.

C. The person monitoring the grouting shall be in full-time communication with the grout plant operator and persons at the grout header.

D. Grout temperatures shall be no lower than 50 degrees Fahrenheit. The ambient temperature within the void shall be no colder than 40 degrees Fahrenheit when grout is injected and for at least 48 hours thereafter.

E. Static water pressure, if any, at the grouting location shall be measured immediately prior to grouting. The maximum sustained grout injection pressure shall not exceed 8 psi above the static water pressure.

F. Prior to grouting, a theoretical volume of grout required to fill the void surrounding the injection location shall be estimated based on probing results. Valves at adjacent holes above the injection point shall be briefly opened after the theoretical volume of grout is injected to determine whether grout returns at these adjacent holes.

G. If more than two times the theoretical grout volume is injected without seeing any return at adjacent holes and the hole is still taking grout at less than the refusal pressure, the grout mix shall be modified to increase viscosity until the pressure increases to the refusal pressure or grout returns at adjacent holes.

H. Once grouting of any hole is begun, grouting of that hole shall continue until completed, unless otherwise directed by the Engineer.

I. If grout is found to flow from an adjacent grout hole, this hole shall be connected to the grout pump and grouted. Grouting of all interconnected holes shall be completed at the pressures specified for grouting before the grout has set.

J. If, during the grouting of any hole, grout, significant seepage, or soil is found to flow from points in the footing or around the sides of the footing-limestone interface, such flows shall be plugged, caulked or chemically grouted.

K. So far as practicable, the maximum allowable grouting pressure shall be maintained constantly during grout injections. As a safeguard against unacceptable displacements, or while grout leaks are being caulked, the Engineer may require the reduction of the pumping pressure, or the discontinuance of pumping.

L. After void grouting of the holes or connections is completed, the pressures shall be maintained by means of stopcocks or other suitable valve devices until the grout has set sufficiently so that it will be retained in the holes or connections being grouted.

M. Grout not injected within 1 hour after mixing shall be wasted and removed from the project site to an approved dumping area.

SB-11.11 Monitoring

A. Grouting injection activities shall be monitored for the following:
   1. Injection pressure at the hole collar and injection rate shall be continuously monitored and recorded and displayed graphically at the location where the grouting work is being controlled.
   2. Any interconnection between adjacent grout holes shall be noted on the grouting log.
   3. The total grout take at each location shall be noted on the grouting log.

B. The Pier 5 footing and seal shall be continuously monitored during void grouting activities. Monitoring shall, at a minimum, include the following:
   1. Continuous visual observation of the footing within 50 feet of the grouting location.
   2. Continuous visual observation of the lower spillway immediately downstream of Pier 5.
   3. Visual monitoring for evidence of new cracks in the footing.

C. Individuals monitoring grouting operations shall be in continuous verbal communication with the personnel controlling the grouting and operating the grout pump.

SB-11.12 Temporary Suspension Criteria

A. Contractor shall be thoroughly familiar with the Instrumentation Monitoring and Response Plan and shall notify the Engineer immediately if any instrument readings or observations approach the threshold or limit values.

B. Grouting shall be temporarily suspended if any of the following occur:
   1. Seepage is observed in the lower spillway area;
   2. Seepage is observed at the footing-limestone bedrock interface.
   3. Perceptible deformations are noted in the limestone bedrock.
   4. Perceptible deformations are observed in the footing.
   5. Increased seepage or new seepage locations are noted within the spillway or at other locations.
   6. Any other behaviors are observed that, in the Engineer's judgment, suggest a detrimental condition may be developing.

C. Grouting shall not resume following a temporary suspension until the Engineer has evaluated conditions and concluded that it is safe to do so.

D. If continued grouting repeatedly creates conditions that, in the Engineer's judgment, require that grouting be temporarily suspended, the Engineer may direct the Contractor to alter grouting procedures. Contractor shall work diligently with the Engineer to develop modified grouting procedures that do not result in the creation of unacceptable conditions.

SB-11.13 Refusal Criteria

A. Refusal will be deemed to have occurred at a given hole when
   1. Grout flow stops when pumping at the limiting injection pressure of 70psi gauge.
   2. Grout returns at adjacent higher holes.
   3. Grouting causes unacceptable deformations that cannot be mitigated by reducing grout injection pressure or rate.
   4. Grout takes are judged to be excessive. Limits for excessive take will be developed after the initial grouting is in progress.

SB-11.14 Acceptance Criteria

A. Void grouting will be considered complete when:
   1. All planned holes have been grouted to refusal
   2. Verification holes have been drilled, inspected, probed and grouted and the Engineer concludes there is no indication that additional grouting is required
   3. The Engineer does not observe any other conditions that suggest additional grouting is required.

SB-11.15 Emergency Grouting

A. Contractor shall be prepared to implement emergency grouting measures immediately if necessary to prevent excessive seepage or piping from developing. The need for emergency grouting may be identified by the Contractor, Engineer, or Owner's Representative, and an emergency grouting program and procedure shall be developed and implemented immediately.

B. Emergency grouting procedures are anticipated to call for injection of chemical grout rings into pre-drilled holes as a means of providing a rapid cut-off of flow passages or soil pipes. Drilling of additional holes may be necessary.

SB-11.16 Basis of Payment

Payment for High Mobility Grouting is considered incidental to Item No. 2433.601 "RECONSTRUCTION FOUNDATION TYPE 2" and will be made at the Contract price per Lump Sum and shall be compensation in full for all costs of furnishing all labor, materials, and equipment necessary to satisfactorily complete the work.

SB-12 (2472) METAL REINFORCEMENT

The provisions of 2472, "Metal Reinforcement," are supplemented as follows:

Delete Table 2472-1, "Maximum Spacing of Supports and Ties for Bridge Slabs," and substitute the following:

Table 2472-1
Maximum Spacing of Supports and Ties for Bridge Slabs

Bar Size Number *English [metric]*	**Maximum Spacing for Slab Bolsters and Continuous Type High Chairs,** *ft [mm]*
3 [10] and 4 [13]	3.00 [900]
5 [16], 6 [19], and 7 [22]	4.00 [1,200]

Delete the first paragraph of 2472.3.D.1, "Lap Splices," and substitute the following:

Provide lap splices as shown on the plans. If not shown on the plans, provide bar reinforcement lap lengths equal to at least 36 diameters for No. 7 [22] bar and smaller and at least 40 diameters for No. 8 [25] bar through No. 11 [36] bar. Lap bar reinforcement for No. 14 [43] bar through No. 18 [57] bar as approved by the Engineer in writing.

Delete Table 2472-2, "Maximum Spacing of Supports and Ties for Bridge Slabs," and substitute the following:

Reinforcement bars may be marked in either U.S. Customary or metric sizes. Make conversions per the following table:

Table 2472-2
Reinforcement Bars
Theoretical Weights
Nominal Dimensions

Bar Size, Designation Number		**Diameter,** *in [mm]*	**Weight,** *lb/ft [kg/m]*
U.S. Customary Bar Size	**Metric Bar Size***		
3	10	0.375 [9.5]	0.376 [0.560]
4	13	0.500 [12.7]	0.668 [0.994]
5	16	0.625 [15.9]	1.043 [1.552]
6	19	0.750 [19.1]	1.502 [2.235]
7	22	0.875 [22.2]	2.044 [3.042]
8	25	1.000 [25.4]	2.670 [3.973]
9	29	1.128 [28.7]	3.400 [5.060]
10	32	1.270 [32.3]	4.303 [6.404]
11	36	1.410 [35.8]	5.313 [7.907]
14	43	1.693 [43.0]	7.650 [11.380]
18	57	2.257 [57.3]	13.600 [20.240]

* Bar designation numbers approximate the nominal diameter of the bar in millimeters

SB-12.1 Stainless Steel Reinforcement Bars (Bridge No. 2440)

Furnish and place stainless steel reinforcement bars to connect the approach panel to the bridge abutment, *and pier dowels, end blocks on the abutments, etc.…*. Stainless steel reinforcement bars are marked with the suffix "S" in the bridge plans. (Example: A1604S.)

A. Materials

The requirements of 2472.2, "Materials," are modified to include the following:

Grade and Type: The material shall conform to ASTM A 955 and to one of the following Unified Numbering System (UNS) designations: S24000, S24100, S32205, S32304, S20910, S30400, S31603, S31803, or S31653.

Supply Grade 60 bars, all of the same UNS designation.

Evaluation of Corrosion Resistance: Prior to fabrication, supply test results from an independent testing agency certifying that stainless steel reinforcement from the selected UNS designation meets the requirements of Annex A1 of ASTM A955. Corrosion performance for the selected UNS designation shall be redemonstrated if the processing method is significantly altered. Removal of mill scale or pickling processes used for stainless steel reinforcement supplied under this contract shall be the same as those used to prepare the samples tested per Annex A1 of ASTM A955.

Chemical composition of the material shall conform to that specified in ASTM A 276, Table 1, Chemical Requirements, for the given UNS designation.

Heat Treatment: Bars may be furnished in one of the heat treatment conditions listed in ASTM A 955, and as needed to meet the requirements of this specification.

Finish: Supply bars that are free of dirt, mill scale, oil and debris by pickling to a bright or uniform light finish. Fabricate and bend bars using equipment that has been thoroughly cleaned or otherwise modified to prohibit contamination of the stainless steel from fragments of carbon steel or other contaminants. Bars displaying rust/oxidation, questionable blemishes, or lack of a bright or uniform pickled surface are subject to rejection.

Bending and Cutting: Bend bars in accordance with 2472, "Metal Reinforcement," and ASTM A 955. Use fabrication equipment and tools that will not contaminate the stainless steel with black iron particles. To prevent such contamination, equipment and tools used for fabrication, including bending and cutting, shall be solely used for working with stainless steel. Do not use carbon steel tools, chains, slings, etc. when fabricating or handling stainless steel reinforcement bars.

Manufacturers/Suppliers: The following manufacturers/suppliers are capable of providing material meeting this specification. Other suitable manufacturers/suppliers may also exist. Ensure that all materials supplied meet the Contract requirements.

SUPPLIERS:	CONTACT	PHONE NO.
Altec Steel, Inc. 5515 Meadow Crest Drive Dallas, TX 75229	Ross Paulson	425-823-1913
American Arminox 1230 Avenue of the Americas 7th Floor New York, NY 10020	Jean-Pierre Belmont	646-283-3837

Contractors Materials Co. 10320 S. Medallion Drive Cincinnati, OH 45241	David Friedman	513-719-0112
Dunkirk Specialty Steel 88 Howard Ave Dunkirk, NY 14048	Gary Zaffalon	800-916-9133 716-366-1000 Ext 323
North American Stainless 6870 Highway 42 East Ghent, KY 41045	Jason Sharp	800-499-7833 Ext 6360
Salit Specialty Rebar 3235 Lockport Road Niagara Falls, NY 14305	Kevin Cornell	877-299-1700 716-299-1990
Talley Metals P.O. Box 2498 Hartsville, SC 29551	Melba Deese	800-334-8324 Ext 712-2356

Control of Material: All reinforcement bars or bar bundles delivered to the project site shall be clearly identified with tags bearing the identification symbols used in the Plans. The tags shall also include the UNS designation, heat treat condition, heat number, grade (corresponding to minimum yield strength level), and sufficient identification to track each bar bundle to the appropriate Mill Test Report.

In accordance with 1603.2, "Sampling and Testing," supply samples to the MnDOT Materials Laboratory for testing. Supply one three foot long sample per heat, per bar size. Each sample shall include one complete set of bar markings. Individually tag each sample with the same information listed above per "Control of Material" and include a copy of the associated Mill Test Report (MTR). Straighten the test specimen if sample comes from a coil.

Provide MTRs for the Project that:

1. Are from the supplying mill verifying that the stainless reinforcement provided has been sampled and tested and the test results meet ASTM A 955, ASTM A 276, Table 1 and the Contract requirements;
2. Include a copy of the chemical analysis of the steel provided, with the UNS designation, the heat lot identification, and the source of the metal if obtained as ingots from another mill;
3. Include a copy of tensile strength, yield strength and elongation tests per ASTM A 955 on each of the bar sizes of stainless steel reinforcement provided;
4. Permit positive determination that the reinforcement provided is that which the test results cover;
5. Include a statement certifying that the materials meet 1601, "Source of Supply and Quality," regarding material being melted and manufactured in the United States; and
6. Certify that the bars have been pickled to a bright or uniform light finish.

B. Construction

Conform to the construction methods in 2401, "Concrete Bridge Construction," and 2472, "Metal Reinforcement," except as modified below:

Ship, handle, store, and place the stainless steel reinforcement bars according to the applicable provisions with the following additions and exceptions:

1. Prior to shipping, ensure that all chains and steel bands will not come into direct contact with the stainless steel reinforcement bars. Place wood or other soft materials (i.e., thick cardboard) under the tie-downs. Alternatively, use nylon or polypropylene straps to secure the stainless steel reinforcement bars.
2. When bundles of reinforcement steel and stainless steel reinforcement bars must be shipped one on top of the other, load the stainless steel reinforcement bars on top. Use wooden spacers to separate the two materials.
3. Outside storage of stainless steel reinforcement bars is acceptable. Cover the stainless steel reinforcement bars with tarpaulins.
4. Store stainless steel reinforcement bars off the ground or shop floor on wooden supports.
5. Do not use carbon steel tools, chains, slings, etc. when fabricating or handling stainless steel reinforcement bars. Only use nylon or polypropylene slings. Protect stainless steel from contamination during construction operations including any cutting, grinding, or welding above or in the vicinity of stainless steel.
6. Alternatively, epoxy coated bars may be substituted for stainless steel bars where the Plans indicate that the bars are immediately adjacent to (touching) galvanized expansion joint device anchorages, but not only for the bars that run parallel to the length of the expansion device and that are completely within 12 inches [305 mm] of the device.
7. Place all stainless steel reinforcement on bar chairs that are solid plastic, stainless steel, or epoxy coated steel. Fabricate stainless steel metal chairs and continuous metal stainless steel supports from stainless steel conforming to the same requirements and UNS designations as stainless steel bar reinforcement as listed in section A, “Materials”. Use stainless steel chairs with plastic-coated feet above steel beams as per 2472, "Metal Reinforcement".

Use one of the listed tie wires to tie stainless steel reinforcement:

- 16 gauge or heavier plastic or nylon coated soft iron wire; or
- Fabricated from stainless steel conforming to the same requirements as stainless steel bar reinforcement as listed in section A, “Materials”, dead soft annealed, annealed at size. The tie wire does not need to be of the same UNS designation as the bar reinforcement.

Do not tie stainless steel reinforcing to, or allow contact with uncoated reinforcement, bare metal forming hardware, or to galvanized attachments or galvanized conduits. Direct contact with these materials is *not* acceptable. When stainless steel reinforcing or dowels must be near uncoated steel reinforcing, bare metal forming hardware or galvanized metals, maintain a minimum 1 in [25 mm] clearance between the two metals. Where insufficient space exists to maintain this minimum, sleeve the bars with a continuous 1/8 in [3 mm] minimum thickness polyethylene or nylon tube extending at least 1 in [25 mm] in each direction past the point of closest contact between the two dissimilar bars and bind them with nylon or polypropylene cable ties. Stainless steel reinforcing bars are allowed to be in direct contact with undamaged epoxy coated reinforcing bars. Stainless steel reinforcing is permitted to contact or be tied to shear studs on steel girders.

Uncoated fasteners (such as used for static safety lines on beams), anchors, lifting loops, etc., that extend from the top flange of prestressed beams into the bridge deck shall be completely removed or cut off flush with the top flange of the beam prior to casting the deck.

Splices: Splices shall generally be of the lap type. Stainless steel mechanical splices may be used in certain situations, subject to the approval of the Engineer.

If it is necessary to increase the number of bar laps from those indicated in the Plans, provide copies of plan sheets to the Engineer showing the revised reinforcement layout with length and location of laps. The Engineer must approve the location of new lap splices prior to fabrication. New lap splices must be at least as long as those shown in the plans. No additional compensation or changes in the reinforcement bar quantities will be made for such splices.

Provide mechanical splices for stainless steel reinforcement made of stainless steel conforming to one of the UNS designations listed in section A, "Materials", above.

Approval: Stainless steel reinforcement placed in any member must be inspected and approved by the Engineer before placing concrete. Concrete placed in violation of this specification may be rejected and removal required, as directed by the Engineer.

C. Method of Measurement
Measurement of the stainless steel reinforcement will be by weight in pounds (kg) based on Table 5.2.2.1 of the MnDOT LRFD Bridge Design Manual, regardless of the actual unit weight of the material supplied.

D. Basis of Payment
Payment for Item No. 2401.541 "REINFORCEMENT BARS (STAINLESS STEEL)" will be made at the Contract price per pound [kilogram] and shall be compensation in full for all costs of furnishing and installing the stainless steel reinforcement with all component materials as described above, including fabricating and shipping.

SB-13 TEMPORARY DOLPHIN CABLE REMOVAL

Access from upstream of Pier 5 may require the temporary removal of Xcel Energy's protection cell (dolphin) safety cable. The sheet pile dolphins nearest to Nicollet Island employ a safety cabling system intended to keep disabled small to medium-sized river craft from entering the St. Anthony Falls and Dam spillways.

Develop work plan describing vessels passing through dolphin area, names and immediate contact information of personnel responsible for cable removal and re-attachment, and duration of cable absence. Submit work plan and notify Xcel Energy, USCOE, and the Hennepin County Water Patrol Division three (3) days prior to temporary removal of the safety cable.

Xcel Energy St. Anthony Falls Hydro Plant (612) 330-6166	U.S. Army Corps of Engineers St. Anthony Falls Lock Master Mike DeRusha (612) 290-5934	Hennepin County Sherriff Water Patrol Division 612-596-9880

Contractor shall expedite mobilization of equipment while safety cable is non-functional and restrict access during the operation to Contractor and MnDOT authorized personnel only.

Contractor shall create a safety plan approved by the Engineer prior to removal of the safety cable.

SB-14 CONCRETE GROUT FILLED FABRIC BAGS

This work shall consist of furnishing and installing Concrete Grout Filled Fabric Bags in accordance with the contract documents and as directed by the Engineer. This work shall be accomplished underwater. The use of experienced divers shall be required.

A. Materials

1. Fabric Bags or Forms: The fabric bags or forms shall be self sealing woven fabric suitable for casting concrete grout underwater. Acceptable products* include:

Texicon Concrete Bags Donnelly Fabricators, Inc 6328 Falling Water Lane Hoschton, GA 30548 Tel: (770) 967-9335	Fabriform Erosion Control Bags Construction Techniques, Inc. PO Box 42067 Cleveland, OH 44142 Tel: (216) 267-7310	IVI Self-Sealing Grout Bag Indian Valley Industries, Inc. PO Box 810 Johnson City, NY 13790 (607) 729-5111

*Or equal as approved by the Engineer.

The size of the bags or forms shall be as specified in the plan, or as determined by the Contractor and approved by the Engineer.

2. Concrete Grout: Concrete grout shall comply with MnDOT Spec 2519. Concrete grout shall consist of a mixture of Portland cement, fine aggregate (sand) and water, so proportioned and mixed as to provide a pumpable grout. Pozzolan, grout fluidifier or pumping aid conforming to this Specification may be used at the option of the Contractor. The hardened concrete grout shall exhibit a minimum compressive strength of 2,500 psi at 28 days in accordance with ACI 214. The Contractor shall submit in writing to the Engineer a mix design showing the mix proportions, and results of two 28-day compressive strength test breaks performed by an independent testing lab.
3. Bar Reinforcement: Bar reinforcement shall comply with SB-11

B. Construction Details

Prior to commencing work, the Contractor shall submit a construction procedure and equipment list to the Engineer for approval. No work shall begin until approval is received. The Contractor shall have underwater video equipment available at the site to afford the Engineer a clear visual inspection of the work at the end of each work day, or completed phase of work.

Before placement of the concrete grout filled fabric bags, all loose material and debris shall be removed from the location of work and properly disposed of by the Contractor. The concrete grout filled fabric bags shall be placed where shown on the plans. Bags shall be positioned to stagger joints between rows. Rows shall be anchored together with reinforcing rod dowels if indicated on the Plans.

The Contractor shall conduct the concrete grout filling operation in a manner that will prevent the possibility of discharge of grout or cement into the water. Concrete grout injection shall be performed in a manner that will avoid rupture of the fabric bags or forms, or the formation of cold joints. A cold joint is defined as one in which the pumping of the concrete grout into a given fabric bag or form is discontinued or interrupted for an interval of forty five (45) or more minutes.

If the concrete grout filled fabric bags are used as a form, placement of required injection and vent pipes shall be accomplished during bag installation. These pipes shall be positioned to ensure that the enclosed volume can be completely filled and the enclosed water displaced. A four foot maximum spacing of the vent/fill pipes is recommended.

Abutting fabric bag or form units, if placed laterally, may be installed immediately after placement of the preceding unit(s). If a fabric bag or form unit is to bear on previously installed units, the lower units shall have been allotted a sufficient set time to support the succeeding, vertically adjacent course of form units.

C. Method of Measurement

This work will be measured as the number of cubic yards of concrete grout actually placed into production and used to fill the fabric bags or forms.

D. Basis of Payment

Payment for Item "CONCRETE GROUT FILLED FABRIC BAGS" is considered incidental to 2433.602 "RECONSTRUCT FOUNDATION TYPE 1" and 2433.602 "RECONSTRUCTION FOUNDATION TYPE 2" and shall be compensation in full for all costs of furnishing all labor, materials, and equipment necessary to satisfactorily complete the work, including underwater video system and divers.

SB-15 ARMY CORPS OF ENGINEERS GATE AND RESERVOIR

Pier 1 is located within an enclosed COE lock and dam reservoir. The reservoir serves the Upper St Anthony Falls lock and dam operation by supplying water to the lock. The water intake system (one of two) is approximately 800 feet down river from the upstream end of the training wall.

The Contractor shall assign a Responsible Person to coordinate with the COE Lock Master during active lock operations to ensure all divers and workers have exited the reservoir prior to lock operation. The Responsible Person shall be on site in the immediate vicinity outside of the reservoir itself at all times during construction within the reservoir. Contractor shall provide the COE Lock Master with contact information for the Responsible Person and shall immediately notify the Lock Master of any reassignments to this role or changes in contact information.

The Contractor shall establish other site-specific safety protocols as necessary and as directed by the COE Lock Master. Contractor shall provide details of such protocols to the Engineer prior to mobilizing at Pier 1.

SB-16 PROJECT STAGING AND SITE DEVELOPMENT

SB-16.1 General Information

This section is intended to provide the Contractor with details to aid staging area development for the Project. It is not intended to limit the Contractor's means and methods, nor does it in any way relieve the contractor's responsibility to secure all applicable permits. For a map of locations identified under this provision, see Figure 2 following SB-16.

SB-16.2 Location Descriptions and Contact Information for Land-based Operations

It is believed that the Contractor will access the river under normal daily operations from upstream of the site in order to bypass the lock(s) and dam(s).

The nearest public boat launch is approximately 1 mile upstream of the site at Boom Island. This can be accessed by road from Sibley Street NE off of Plymouth Avenue.

Hall's Island is immediately upstream of the Boom Island boat launch and across Plymouth Avenue.

The nearest barge terminal, Minneapolis' Upper Harbor Terminal, is approximately 2.5 miles upstream of the site. This location offers the greatest potential for storing and loading construction materials within a reasonable distance from the bridge site. This facility is likely to close permanently in 2015.

Access or staging from either West River Parkway or SE Main Street is highly restrictive and problematic due to the facilities affected.

The following table identifies possible staging areas along with property owner/manager contact information.

Location	Owner/Manager	Information
Boom Island	Minneapolis Park and Recreation Board General Information (612) 230-6400	• Boat launch area
Wilder Street parking lot on Nicollet Island	Minneapolis Park and Recreation Board Jim Holtzlider (612) 230-6462 jholtzlider@minneapolisparks.org	• No river access • Possible Field office site
Hall Island	Minneapolis Park and Recreation Board Jim Holtzlider (612) 230-6462 jholtzlider@minneapolisparks.org	• No river access • Possible field office site • Possible intermediate material storage location for shipping via truck
Upper Harbor Terminal	City of Minneapolis (River Services Inc.) Jerry Christensen (612) 588-8141	• River barge Access • Possible intermediate material loading/storage for truck and barge
West River Parkway and SE Main Street	Minneapolis Park and Recreation Board Jim Holtzlider (612) 230-6462 jholtzlider@minneapolisparks.org	• Minimal river access • Possible Field office sites
City Streets	Minneapolis Traffic and Parking Services (612) 673-2383 or (612) 673-5319	

SB-16.3 Location Descriptions and Contact Information for River-based Operations

Any temporary facilities within the Mississippi River impacting river navigation will require coordination with and prior approval as stated in MnDOT 1709 and SB-5. Additionally, restricted walkways along the lock and dam may be made available under similar requirements.

US Coast Guard contact information:

Mr. Bill Knutson
Bridge Administration
(314) 269-2434
William.F.Knutson@uscg.mil

COE contact information:

Mike DeRusha
COE Lock Master
(651) 290-5934
Michael.E.DeRusha@usace.army.mil

Possible locations to stage from within the Mississippi River include the lock reservoir adjacent to Pier 1 (also called the south intake channel).

A river access gate is located on the upstream end of the intake channel. Access may not be possible from the river, however, given the state of the gate mechanism. Contractor review is warranted prior to bidding on the contract. Removal of the gate is not allowed.

> The COE is able to regulate on a temporary basis the flow through this intake channel. See section SB-14 of these provisions for more information.

Additional staging for Piers 1 and 2 could include a barge moored upstream of Pier 1 against the south river wall parallel to West River Parkway out of the navigation channel. Access is likely limited to personnel only and not equipment or material. Further coordination with and permitting by the Minneapolis Park and Recreation Board by the Contractor would be necessary.

Staging for Pier 5 could include mooring a barge immediately downstream of Nicollet Island. Access to the barge would be by boat or tug.

Moored barges may be subject to vandalism. Significant consideration should be given by the Contractor to site security, redundant barge anchorage points, and barge placement. Loose barges in this area could result in catastrophic damage to the falls.

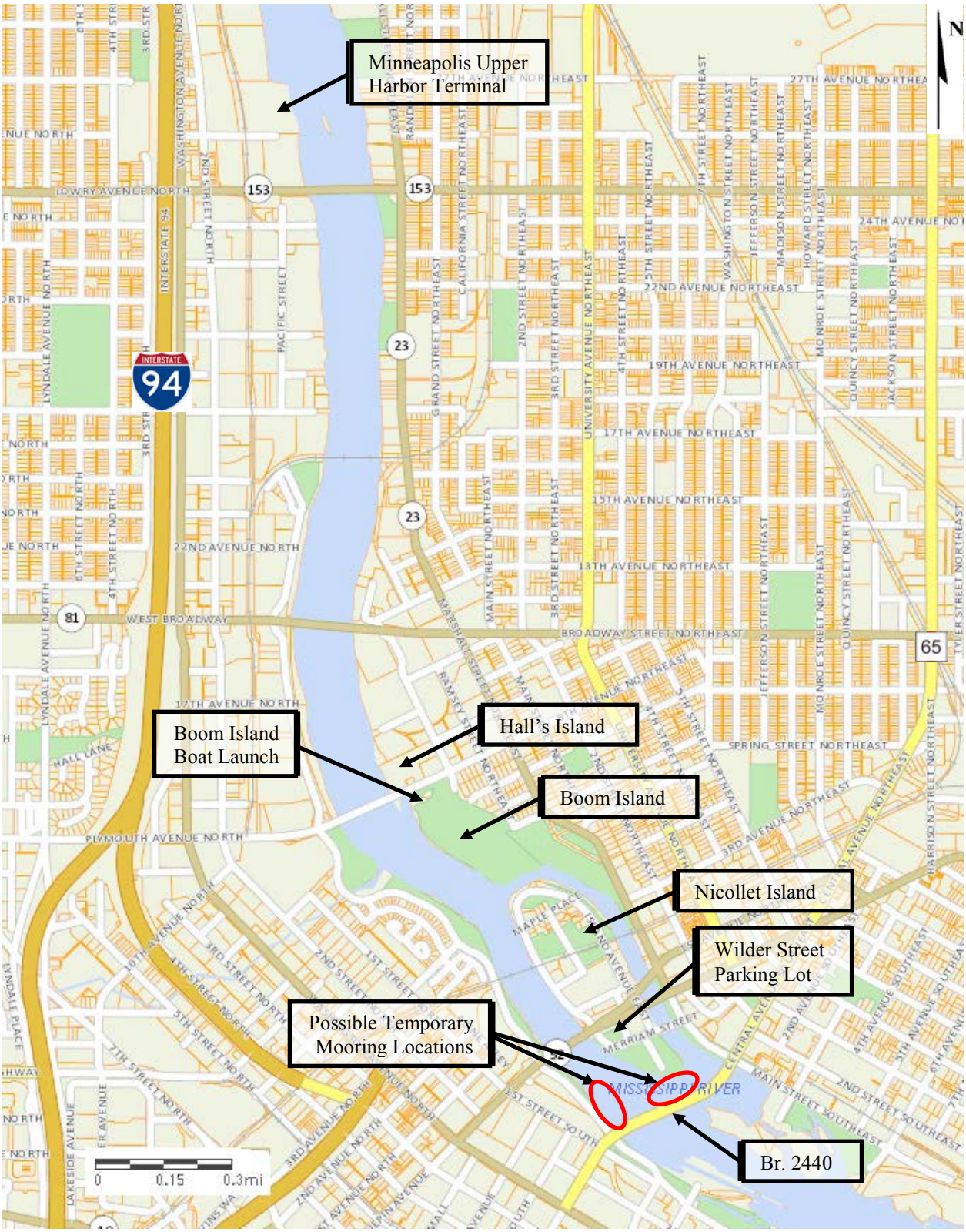

Figure 2: STAGING AND DEVELOPMENT MAP

(1910) FUEL ESCALATION CLAUSE

The provisions set forth in Mn/DOT 1910 are hereby deleted, and the following is substituted therefore:

These provisions provide for compensation adjustments in the cost of motor fuels (diesel and gasoline) consumed in prosecuting the Contract work. The Engineer will calculate the Fuel Cost Adjustments. Payments or credits will be applied to partial and final payments for work items set forth herein.

For this purpose, the Department will establish a Base Fuel Index (BFI) for fuel to be used on the Project. The Base Fuel Index will be the average of the high and low rack prices shown for No. 2 ultra low sulfur fuel oil in the "OPIS Energy Group" tabulation titled "RackFax, Minneapolis, MN, OPIS Direct Gross No. 2 Distillate Fuels" ***for the day of the Contract letting***.

A Current Fuel Index (CFI) in cents per gallon will be established for each month. The CFI will be the average of the high and low rack prices shown for No. 2 ultra low sulfur fuel oil in the "OPIS Energy Group" tabulation titled "RackFax, Minneapolis, MN, OPIS Direct Gross No. 2 Distillate Fuels" averaged for the beginning and ending dates of the monthly period being adjusted.

The Engineer will compute the ratio of the Current Fuel Index to the Base Fuel Index (CFI/BFI) each month. If that ratio falls between 0.85 and 1.15, no fuel adjustment will be made that month. If the ratio is less than 0.85, a credit to the Department will be computed. If the ratio is greater than 1.15, additional payment to the Contractor will be computed.

Credit or additional payment will be computed as follows:

(1) The Engineer will estimate the quantity of work done in that month under each of the Contract items listed below.

(2) The Engineer will compute the gallons of fuel used in that month for each of the Contract items listed below by applying the unit fuel usage factors shown.

(3) The Engineer will summarize the total gallons (Q) of fuel used in that month for the applicable items.

(4) The Engineer will determine the Fuel Cost Adjustment (FCA) from the following formulas:

If the Current Fuel Index (CFI) is greater than the Base Fuel Index (BFI), the following formula shall be used to determine the amount of Fuel Cost Adjustment to be paid to the Contractor.

$$FCA = [(CFI/BFI) - 1.15] \times Q \times BFI$$

If the Current Fuel Index (CFI) is less than the Base Fuel Index (BFI), the following formula shall be used to determine the amount of Fuel Cost Adjustment to be credited to the Department.

FCA = [(CFI/BFI) – 0.85] x Q x BFI

Where FCA = Fuel Cost Adjustment (cents)
CFI = Current Fuel Index (cents per gallon)
BFI = Base Fuel Index (cents per gallon)
Q = Monthly total gallons of fuel

Basis of Payment

A Fuel Cost Adjustment payment to the Contractor will be made as a lump sum each payment period based on the last published CFI. A Fuel Cost Adjustment credit to the Department will be deducted as a lump sum each payment period from any monies due the Contractor. Upon completion of the work under the Contract, any difference between the estimated quantities previously paid and the final quantities will be determined. The CFI in effect on the day of completion of the Contract will be applied to the quantity differences in accordance with the procedures set forth above.

Schedule of Work Items
(Only items shown will be considered for compensation adjustments.)

	Item	Unit	Gallons of Fuel per Unit	Unit	Gallons of Fuel per Unit
(1) Earthwork:					
2105.501	Common Excavation	Cu. Yd	0.17	m^3	0.22
2105.503	Rock Excavation	Cu. Yd	0.27	m^3	0.35
2105.505	Muck Excavation	Cu. Yd	0.17	m^3	0.22
2105.507	Subgrade Excavation	Cu. Yd	0.17	m^3	0.22
2105.515	Unclassified Excavation	Cu. Yd	0.23	m^3	0.30
2105.521	Granular Borrow (EV)	Cu. Yd	0.17	m^3	0.22
	Granular Borrow (CV)	Cu. Yd	0.19	m^3	0.25
	Granular Borrow (LV)	Cu. Yd	0.14	m^3	0.18
2105.522	Select Granular Borrow (EV)	Cu. Yd	0.17	m^3	0.22
	Select Granular Borrow (CV)	Cu. Yd	0.19	m^3	0.25
	Select Granular Borrow (LV)	Cu. Yd	0.14	m^3	0.18
2105.523	Common Borrow (EV)	Cu. Yd	0.17	m^3	0.22
	Common Borrow (CV)	Cu. Yd	0.19	m^3	0.25
	Common Borrow (LV)	Cu. Yd	0.14	m^3	0.18
2105.535	Topsoil Borrow (EV)	Cu. Yd	0.17	m^3	0.22
	Topsoil Borrow (CV)	Cu. Yd	0.19	m^3	0.25
	Topsoil Borrow (LV)	Cu. Yd	0.14	m^3	0.18
2106.607	Common Embankment (CV)	Cu. Yd	0.19	m^3	0.25
2106.607	Granular Embankment (CV)	Cu. Yd	0.19	m^3	0.25
2106.607	Select Granular Embankment(CV)	Cu. Yd	0.19	m^3	0.25
2106.607	Select Granular Embankment Modified (__ %) (CV)	Cu. Yd	0.19	m^3	0.25
2106.607	Excavation – Rock	Cu. Yd	0.27	m^3	0.35
2106.607	Excavation – Muck	Cu. Yd	0.17	m^3	0.22

	Item	Unit	Gallons of Fuel per Unit	Unit	Gallons of Fuel per Unit
(2) Aggregate Base:					
2211.501	Aggregate Base	Ton	0.55	t	0.61
2211.502	Aggregate Base (LV)	Cu. Yd	0.77	m^3	1.01
2211.503	Aggregate Base (CV)	Cu. Yd	0.99	m^3	1.29
2211.607	Open Graded Aggregate Base (CV)	Cu. Yd	0.99	m^3	1.29
(3) Aggregate Shouldering:					
2221.501	Aggregate Shouldering	Ton	0.55	t	0.61
2221.502	Aggregate Shouldering (LV)	Cu. Yd	0.77	m^3	1.01
2221.503	Aggregate Shouldering (CV)	Cu. Yd	0.99	m^3	1.29
(4) Concrete Pavements:					
2301.511	Structural Concrete	Cu. Yd	0.98	m^3	1.28
2301.513	Structural Concrete HE	Cu. Yd	0.98	m^3	1.28
2301.604	Structural Concrete	Sq. Yd.	0.027*t	m^2	0.00128*t
(5) Bituminous Pavements:					
2350.501	Type ( ) Wearing Course Mixture ( )	Ton	0.90	t	0.99
2350.502	Type ( ) Non-Wearing Course Mixture ( )	Ton	0.90	t	0.99
2350.503	Type ( ) ( ) Course ( ), (t)" Thick	Sq. Yd	0.051*t		
2350.503	Type ( ) ( ) Course (,), (t) mm Thick			m^2	0.0024*t
2360.501	Type SP ( ) Wearing Course Mixture ( )	Ton	0.90	t	0.99
2360.502	Type SP ( ) Non-Wearing Course Mixture (,)	Ton	0.90	t	0.99
2360.503	Type SP ( ) ( ) Course (,), (t)" thick	Sq. Yd	0.051*t		
2360.503	Type SP ( ) ( ) Course (,), (t) mm thick			m^2	0.0024*t
(6) Pipe: ***					
2501.511	__ ____ Pipe Culvert ___	Lin. Ft.	0.70	m	2.30
2501.521	__ ____ Pipe Arch Culvert ___	Lin. Ft.	0.70	m	2.30
2501.561	__ ____ Pipe Culvert Des 3006 ___	Lin. Ft.	0.70	m	2.30
2501.603	__ Pipe Culvert	Lin. Ft.	0.70	m	2.30
2503.511	__ ____ Pipe Sewer ___	Lin. Ft.	0.70	m	2.30
2503.521	__ ____ Pipe Arch Sewer ___	Lin. Ft.	0.70	m	2.30
2503.541	__ ____ Pipe Sewer Des 3006 ___	Lin. Ft.	0.70	m	2.30
2503.603	__ ____ Pipe Sewer	Lin. Ft.	0.70	m	2.30

t = thickness (in inches or mm)

NOTE: No price adjustments will be made on fuel used for drying and heating aggregates.
*** No price adjustment will be made for pipes less than 12" in diameter or jacked pipes.

Schedule of Materials Control

2014

Contents

Introduction Page 1

SCHEDULE OF MATERIALS CONTROL(For usewith the 2014 Standard Specifications for Construction):

I. Grading and Base Construction Items 2

II. Bituminous Construction Items for Specification 2360 9

III. Construction Items for Bituminous Specialty Items 16

IV. Concrete Construction Items 21

V. Landscaping and Erosion Control Items 39

VI. Chemical Items 42

VII. Metallic Materials and Metal Products 45

VIII. Miscellaneous Materials 53

IX. Geosynthetics, Pipe, Tile, and Precast/Prestressed Concrete 54

X. Brick, Stone, and Masonry Units 59

XI. Electrical and Signal Equipment Items 60

Certifications List 63

Telephone Index for Schedule of Materials Control 66

Form Index 67

Introduction Page

Minnesota Department of Transportation Schedule of Materials Control (SMC)

(Federal Aid, State Funds, County/Municipal Federal Aid Projects and State Aid Projects)

This schedule outlines the minimum sampling and testing required for most materials used in highway construction. Some items that are rarely used or materials of recent development are often covered by special provisions and may not be shown on the schedule. For more information regarding contract requirements for testing, please reference the "Standard Specifications for Construction", Specification 1603 Materials: Specifications, Samples, Tests, and Acceptance.

Laboratories performing acceptance tests for payment shall be accredited by the AASHTO Materials Reference Laboratory (AMRL) or a comparable accreditation program approved by MnDOT and the FHWA for all test procedures performed. Grading and Base materials are exempt from the accreditation requirement.

When sample sizes required for testing exceed 35 pounds, please submit multiple containers of the material with no individual container weighing more than 35 pounds.

Small quantities of materials may be accepted without sampling and testing. A small quantity is defined as any total quantity, for the whole project, of one material, which is smaller than the minimum quantity required for testing unless modified by the individual material items. These materials shall be from known, reliable sources, perform satisfactorily and meet the requirements for purpose intended. The inspection report (Form 02415) should include a statement to this effect and show the source. Form 2403 may be used to report small quantities of diverse materials from different sources. Form 02415 and Form 2403 (or approved revisions) are referenced in the Schedule of Materials Control for project record documentation and are required to be maintained in the project file.

Previously approved materials transferred from another project should be reported on Form 02415. The report should include: type of material, quantities involved, source, and supplier of materials. Whenever possible, include the project number for which the material was originally approved.

If Forms 02415 and 2403 are referenced by form number within the Schedule of Materials Control for materials or products received from pre-approved sources, where the field responsibility for acceptance is visual inspection and all information required to complete these forms is contained in other documents in the project file, the use of these forms becomes optional. If these forms are completed and sent to the Project Engineer by off-site inspection personnel from the district or the Office of Materials, they must be retained in the project file.

A Telephone Index is included with the Schedule giving contact information for the specialty areas if further information is required regarding the various materials. A form index is also included.

The Department maintains the Approved/Qualified Products List and the Certified Products and Services List, as well as, the Schedule of Materials Control. All are available electronically on the Office of Materials and Road Research website. www.dot.state.mn.us/materials.html

Products manufactured offsite may be pre-approved; however, final acceptance will be made at the point of incorporation, based upon review of documentation and inspection for shipping or other damage.

Contact the MnDOT District Independent Assurance Inspector when project starts to provide the proper servicing of your project.

I. Grading and Base Construction Items 2014 Spec Book (www.dot.state.mn.us/materials/gradingandbase.html)

Pay Item Number	Test Type / Material	Spec. No.	Minimum Contractor Quality Control Testing Rate	Minimum Agency Verification (Acceptance) Testing (See Note 1)		Minimum Companion (Split Lab) Sample (See Notes 2 & 3)		Form No. (See Note 5)
				Rate	Size	Rate	Size	
(a) 2118 (b) 2211 (c) 2221 or 2118 (d) Spec. Prov. or 2212	**1. Gradation** (a) Aggregate Surfacing (b) Aggregate Base (c) Aggregate Shoulders (d) Drainable Aggregate Base (OGAB & DSB)	3136, 3138, & Special Provisions	Production: 1/550 yd^3 (CV)	**Random Sampling** • < 280 yd^3 (CV) No tests Required • ≥ 280 yd^3 (CV) to < 1,100 yd^3 (CV) 1. Lot Size = Total Quantity 2. Divide lot into two equal sublots 3. Collect one random sample from each sublot 4. Average results to determine compliance • ≥ 1,100 yd^3 (CV) to < 5,500 yd^3 (CV) 1. Lot Size = Total Quantity 2. Divide Lot into four equal sublots 3. Collect one random sample from each sublot. 4. Average results to determine compliance • ≥ 5,500 yd^3 (CV) 1. #Lots = $\frac{\text{Total Bid Quantity}}{5{,}500}$ 2. Round # Lots up to next whole number 3. Lot Size = $\frac{\text{Total Bid Quantity}}{\#\text{Lots}}$ 4. Divide each Lot into four equal sublots. 5. Collect one random sample from each sublot. 6. Average results for each Lot to determine compliance.	60 lb.	1 per project.	30 lb.	**G&B-001** **G&B-002** **G&B-101** **G&B-104**

I. Grading and Base Construction Items 2014 Spec Book (www.dot.state.mn.us/materials/gradingandbase.html)

Pay Item Number	Test Type / Material	Spec. No.	Minimum Contractor Quality Control Testing Rate	Minimum Agency Verification (Acceptance) Testing (See note 1)		Minimum Companion (Split Lab) Sample (See Notes 2 & 3)		Form No. (See Note 5)
				Rate	Size	Rate	Size	
(e) 2105 2106	**1. Gradation**(Continued) (e) Granular Borrow/Embankment, Select Granular Borrow/Embankment, & Modified Granular Borrow/Embankment Stabilizing Aggregate	3149 & Special Provisions	1/10,000 yd^3 (CV)	1/20,000 yd^3 (CV)	30 lb.	1 per project.	30 lb.	**G&B-001** **G&B-101** **G&B-104**
(f) Special Provisions & 2215	(f) Full Depth Reclamation (FDR)	Special Provisions & 3135	1/6,000 yd^2 (See Note 10)	1/12,000 yd^2	60 lb.	NA		**G&B-001** **G&B-101**
(g) 2511	(g) Granular Filter	3601 & Special Provisions	1 per source before delivery on project	1 per source	300 lb.	NA		**G&B-001** **G&B-101** **G&B-104**
(h) 2451 (i) 2451 (j) 2451 (k) 2451 (l) 2451 (m) 2502	(h) Granular Backfill (i) Aggregate Backfill (j) Granular Bedding (k) Aggregate Bedding (l) Coarse Filter Aggregate (m) Fine Filter Aggregate	3149 & Special Provisions	Two per source before delivery on project	1 per source	60 lb.	NA		**G&B-001** **G&B-101** **G&B-104**

I. Grading and Base Construction Items 2014 Spec Book (www.dot.state.mn.us/materials/gradingandbase.html)

Pay Item Number	Test Type / Material	Spec. No.	Minimum Contractor Quality Control Testing Rate	Minimum Agency Verification (Acceptance) Testing (See Note 1)		Minimum Companion (Split Lab) Sample (See Notes 2 & 3)		Form No. (See Note 5)
				Rate	Size	Rate	Size	
(a) 2211 (b) 2221	**2. Proctor Test** (a) Aggregate Base (b) Aggregate Shoulder	2211, 2221, & Special Provisions		(See Note 8) 1 per source	50 lbs.	1 per project.	25 lb.	**G&B-303** **G&B 305**
(c) 2105 2106 2112	(c) Embankment Soil, Granular Borrow/Embankment, Select Granular Borrow/Embankment, & Modified Granular Borrow/Embankment Subgrade Preparation (See Note 12)	2105 & 2106	1 major soil type (See Notes 7 & 11) Not required for Specified Density, used for optimum moisture determination.	(See Note 8) For Specified Density: 1/major soil type. For all other compaction requirements: One Contractor Companion/project				
(a) 2211 (b) 2221	**3. Specified Density Test (Sand Cone or other)** (a) Aggregate Base (b) Aggregate Shoulder	2211, 2221 & Special Provisions		(See Note 8) 1/1,000 yd^3 (CV)				
(c) 2105 2106 2112	(c) Embankment Soil, Granular Borrow/Embankment, Select Granular Borrow/Embankment, & Modified Granular Borrow/Embankment Subgrade Preparation (See Note 12)	2105, 2106 & Special Provisions		(See note 8) **Roadway Embankment**: One Sand Cone test/4,000 yd^3 **Structure Trenches**: One Sand Cone test every two feet in height/250 feet of each structure length. **Subgrade Preparation** One per 25 Road Stations		NA	NA	**G&B-001** **G&B-304**

I. Grading and Base Construction Items 2014 Spec Book (www.dot.state.mn.us/materials/gradingandbase.html)

Pay Item Number	Test Type / Material	Spec. No.	Minimum Contractor Quality Control Testing Rate	Minimum Agency Verification (Acceptance) Testing Rate (See Note 1)	Form No. (See Note 5)
(a) 2211 (b) 2221	**4. Dynamic Cone Penetration (DCP) Index Method** (a) Aggregate Base (b) Aggregate Shoulder	2211, 2221, & Special Provisions		1 DCP test/500 yd^3(CV)	**G&B-001** **G&B-204**
(c) 2215	(c) Full Depth Reclamation (FDR)	3135 & Special Provisions		1 DCP test/3,000 yd^2	**G&B-001** **G&B-205**
(d) 2105 2106	(d) Granular Borrow/Embankment, Select Granular Borrow/Embankment, & Modified Granular Borrow/Embankment and all other granular materials.	2105, 2106, 3149 & Special Provisions		**Roadway Embankment:** One DCP test/2,000 yd^3 (CV). **Structure Trenches:** One DCP test/250 feet of each structure length. **Test entire layer**.	**G&B-001** **G&B-203**
(a) 2118 (b) 2211 (c) 2212 (d) 2221	**5. Moisture Content Test During Compaction** Needed for all compaction methods including quality compaction. (See Note 9) (a) Aggregate Surfacing (b) Aggregate Base (c) Drainable Aggregate Base (d) Shoulder Base Aggregate	2211, 2221, & Special Provisions	1/1,000 yd^3	1 per project in this category. Obtain split samples from Contractor.	**G&B-001** **G&B-105**
(e) 2215	(e) Full Depth Reclamation (See Note 9)	2215 or Special Provisions	1/6,000 yd^2	1 per project in this category. Obtain split sample from Contractor.	
(f) 2105 2106 2112	(f) All embankment materials (See Note 9) (g) Subgrade Preparation	2105, 2106 & Special Provisions	**All Embankment Materials** 1/10,000 yd^3 **Subgrade Preparation** One per 25 Road Stations	1 per project in this category. Obtain split sample from Contractor	

I. Grading and Base Construction Items 2014 Spec Book (www.dot.state.mn.us/materials/gradingandbase.html)

Pay Item Number	Test Type / Material	Spec. No.	Minimum Contractor Quality Control Testing Rate	Minimum Agency Verification (Acceptance) Testing		Form No. (See Note 5)
				Rate	Size	
2105 2106 2118 2211 2212 2221	**6. Percent Crushing**	3136, 3138, 3149 & Special Provisions	1/Day	2 per source (See Notes 3 & 4)	30 lb.	**G&B-103** (02463) **G&B-104** (24346-02)
2105 2106 2118 2206 2211 2212 2221 2451 2502	**7. Aggregate Quality** (LAR, Insoluble Residue, Lithological Exam & Bitumen Content)		1/source (See Note 6)	2 per source (See Notes 3, 4 & 6)		**G&B-104** (24346-02)
2215 or Special Prov.	**8. Depth Check** Full Depth Reclamation (FDR) Stabilized Full Depth Reclaim (SFDR) Cold In-Place Recycling (CIR)	3135 or Special Provisions	1/1000 feet of machine width	1/4000 feet of machine width		**G&B-401**

General Notes: Sampling and Testing Procedures are found in the Grading and Base Manual in Section 5-692.200. Obtain all gradation, quality and crushing samples after spreading and before compaction.

Modify testing and sampling protocol for increases in Plan quantities as follows:

Time Plan Quantity Increased	Testing and Sampling
Before Collection of first sample.	Reorder sampling to account for additional quantity.
After Collection of first sample, but before sampling is complete.	Complete testing of current lot, and then reorder the sampling using the remaining quantity.
After collection of all original Plan quantity samples.	Order sampling for additional quantity.

I. Grading and Base Construction Items 2014 Spec Book (www.dot.state.mn.us/materials/gradingandbase.html)

Note 1: Samples are not required for 280 yd^3 (CV) (500 tons) or less. Report small quantities on Form 02415 or Form 2403. http://www.dot.state.mn.us/const/tools/forms.html.

Note 2: Laboratories with AMRL accreditation that perform Agency Verification testing are not required to submit companion samples. When Verification testing is not performed in an AMRL accredited facility, obtain the Companion/Lab sample as a split sample from the first Agency Verification sample, and include the gradation results on the sample card.

Note 3: Companion gradation and proctor, and Verification crushing and aggregate quality samples are not required for 550 yd^3 (CV) (1,000 tons) or less.

Note 4:

- Carbonate aggregates require 50 lb. samples for lab testing.
- Submit the initial aggregate quality and crushing sample from the first day's production.
- The crushing test will not be required when the material is crushed from a quarry.
- A second test is required, when the first test fails. Average both tests to determined compliance, when two tests are performed.
- Not all quality and crushing tests are required for each material, see specifications
- Use the table below as a **guideline**, **determination of specific required tests is through the Specifications and/or the Special Provisions.**

Note 5: Tests may be reported on Grading and Base forms or on MnDOT LIMs Reports. Forms are available on the Grading & Base website at: http://www.dot.state.mn.us/materials/gradingandbase.html

Note 6: Use the Centrifuge Method (MnDOT Lab. Manual Method 1852) to determine bitumen content.

Note 7: Major soil types are defined in the Triaxial Chart located in the Grading and Base Manual.

Note 8: Required only for specified density.

Note 9: Required during Compaction. For Quality Compaction of Shoulder Aggregate (2118 or 2221), the Engineer may replace the moisture testing requirement with time stamped photo documentation of water being applied.

Note 10: Provide gradation test results to the Engineer within the first 500 feet (150 m) of production and within 500 feet (150 m) after a failing gradation.

Note 11: The Contractor may use a one point Proctor, or the estimated optimum moisture content formula (Form G&B- 305) to determine the optimum moisture.

Note 12: For Subgrade Preparation, the specified density requirement is 100% of proctor density.

I. Grading and Base Construction Items 2004 Spec Book (www.dot.state.mn.us/materials/gradingandbase.html**)**

Table: Guidelines for Required Crushing and Aggregate Quality Tests					
Material	**Crushing**	**Bitumen Content**	**LAR**	**Insoluble Residue**	**Lithological Exam & Shale Float Test**
3136 Drainable Bases	Yes. Not required for quarried sources.	Not applicable	Yes	Yes, if source from a carbonate quarry	Yes, when not from quarried source.
3138 Aggregate for Surface and Base	Yes for Class 5, 5Q and 6. Test waived if material contains recycled at twice the minimum crushing requirement. Not required for quarried sources.	Yes, if it contains Bitumen.	Yes, if source is carbonate quarry and does not contain bitumen.	Yes, if source from a carbonate quarry, and does not contain bitumen.	Yes for Class 3, 4, 5, 5Q and 6, when not from quarried rock, and does not contain bitumen.
3149 Granular Material *	Yes for Stabilizing Aggregate, Fine Aggregate Bedding and Medium Filter Aggregate. Test waived if material contains recycled at twice the minimum crushing requirement. Not required for quarried sources.	Yes, if it contains Bitumen	Not applicable	Yes, if source from a carbonate quarry, and does not contain bitumen	Yes for Medium Filter Aggregate
* Note for 3149.2D.2 Granular Materials - Structural Backfill, perform all tests required of 3137.2B3, shear angle test (AASHTO T236) and Proctor.					

Grading and Base Conversion from Volume (CV) to Weight

If possible, always perform a proctor for the material in question to obtain a conversion factor.

Only use the following conversion factor for materials meeting specifications 3138 or 3149 Stabilizing Aggregate. Material may be composed of crushed limestone, granite, gneiss, quartzite, recycled materials or natural gravel. **Do not** use the conversion factor for crushed basalt, taconite, or other heavy or light-weight aggregates. For other materials or gradations contact the Grading and Base Unit.

To convert from volume to weight use the following: **1 yd^3 (CV) = 1.8 tons.**

See the Grading and Base Manual Section .430 for further explanation.

II. Bituminous Construction Items for Specification 2360

Note: Projects with bituminous tonnage less than or equal to 300 tons (272 metric tons) per day may be accepted on a small quantity basis at the discretion of the Engineer. Retain Form 02415 or Form 2403 in Project File.

(All plant mixed asphalt from Certified Plants)

DEFINITIONS

SAMPLE TYPE	DESCRIPTION	SAMPLE LOCATION DETERMINED BY	SAMPLE TAKEN BY	SAMPLE TESTED BY
QC	Quality Control Testing performed by Contractor. Also known as Process Control Testing.	Contractor	Contractor	Contractor
QA	Quality Assurance Testing performed by the Agency. This test is performed on a companion sample to the Contractor's QC sample.	Contractor Contractor (mixture) Agency (density cores)	Contractor	Agency
Verification	A sample to assure compliance of the Contractor's Quality Control program. The results shall be included as part of the QA Testing Program.	Agency	Agency	Agency
Verification Companion	A companion sample to the Agency's Verification sample provided to the Contractor. The Contractor is required to test this sample. The results shall be used as part of the QC program.	Agency	Agency	Contractor
IAST	The Independent Assurance Sampling and Testing assures testers are sampling and testing properly and that equipment is calibrated correctly.	Agency	Contractor or Agency	Contractor or Agency

II. Bituminous Construction Items for Specification 2360 (cont.)

A. Pre-Production Sampling and Testing for Specification 2360 Plant Mixed Asphalt

Minimum Sample Sizes:

Quality Sample Size for Lab Submittal:

Plus #4 aggregate sample for quality testing and Percent Crushing	80 lb. (35 kg)
Minus #4 aggregate for quality testing	35 lb. (15 kg)
Bituminous mixture plus 2 Gyratory specimens for volumetric testing	80 lb. (35 kg)
Bituminous mixture for TSR testing (option A)	80 lb. (35 kg)
Bituminous mixture for TSR testing plus 6 Gyratory specimens (option B)	20 lb. (10 kg)
Mineral filler.	2 lb. (1 kg)
RAP for Quality Testing	80 lb. (35 kg)
RAS (shingles) for Gradation and Quality Testing	10 lb. (5 kg)
Asphalt Binder	1 qt. (1L)

Pay Item No.	Test Type	Spec. No.	Producer/Contractor Testing	Agency Testing	Form No.
2360	Bituminous Mix Design (QC/QA)	2360	**Contractor submits Mix Design Option 1 or Option 2**	Option 1- Laboratory Mix Design: In addition to reviewing the Trial Mix data (JMF), test Contractor's mixture (at optimum asphalt content). Also, evaluate TSR per 2360.2E5a(3). Option 2- Laboratory Mix Design: Review submitted Mix data only.	Approved Mix Design Report
2360	Aggregate Quality Testing (QA only)	2360	Provide 24 hour notice of intent to sample aggregates for quality testing. Agency has the option to monitor sampling. Submits to the Bituminous Engineer or the District Materials Engineer one (1) sample of each non-asphaltic aggregate type or class per source per year. Also submit the asphaltic aggregate material when the mixture contains RAP or RAS. Provide documentation that of all RAS /TOSS (Tear Off Shingle) material is from a MPCA certified supplier.	Test as directed by the Bituminous Engineer or the District Materials Engineer.	Test Report
2360	Mineral Filler (QA only)	2360	One (1) sample per shipment of 50 tons (45 metric tons) or less, unless previously inspected.	Testing as directed by the Engineer or the District Materials Engineer.	Test Report
2360	Additives (QA Only)	2360	Sample blended asphalt binder and additive, 1 qt. (1 L). Sample first shipment of each type of material. Then submit one sample per 250,000 gal. (1,000 m3) (approximately 1,000 ton).	Testing as directed by the Engineer or the Chemical Laboratory Director.	Test report

II. Bituminous Construction Items for Specification 2360 (cont.)

B. BITUMINOUS PRODUCTION for Specification 2360

*Verification Testing

Verification Companion testing from Agency split sample is required to be performed and used as the next QC sample that day.

SAMPLE SIZE:		
	Aggregate for Gradation (QC/QA)	35 lb. (15 kg)
	Plus #4 Aggregate Type for Quality Testing	80 lb. (35 kg)for each source
	Minus #4 Aggregate Type for Quality Testing	35 lb. (15 kg) for each source
	RAP material for Quality Testing	80 lb. (35 kg) for each source
	RAS (Shingles) for Processed Gradation and Quality Testing	10 lb. (5 kg)
	Mixture Properties (QC/QA) 3 full 6" by 12" cylinder molds for QA	65 lb. (30 kg)
	TSR (QC/QA) 4 full 6” by 12” cylinder molds for QA	90 lb. (40 kg)
	Aggregate Specific Gravity (QC/QA)	90 lb. (40 kg)
	Asphalt Binder (QA)	1 qt. (1 L)
	Emulsified Asphalt (QA)	½ gal (2 L)

Pay Item No.	Test Type	Spec. No.	Producer/Contractor Testing	Agency Testing	Form No.
2360	Aggregate Quality Testing Including aggregate specific gravity (QA Only)	2360		Take additional samples when aggregate qualities approach specification limits or when material variation is observed, take additional field samples as requested by Project Engineer. Take additional samples when material variation is observed in RAP or RAS take additional field samples as requested by Project Engineer.	Lab report
2360	Moisture Content in Mixture (QC/QA) Lab Manual 1855	2360	Sample and test as directed by the Engineer.		Test Summary Sheet (TSS)

II. Bituminous Construction Items for Specification 2360 (cont.)

Pay Item No.	Test Type	Spec. No.	Producer/Contractor Testing	Agency Testing	Form No.
2360	Asphalt Binder Content, % AC, ADD AC, AC/Total AC ratio (QC/QA, Verification*) Lab Manual 1851, 1852, 1853	2360	(a) Incinerator Oven MnDOT Lab Manual 1853 (b) Chemical Extraction MnDOT Lab Manual 1851 or 1852 REMARKS: Contractor selects one method at the beginning of the project (when material is submitted for Trial Mix Review) and use that method for the entire project. The Contractor and Engineer may agree to change test procedures during the construction of the Project. See Note #1, Note #2 & Note #4. A computer file of the plant's control settings is required every 20 minutes of production.	The inspector will witness all QC mixture sampling and take possession of their QA-Verification split of this sample immediately after the sample is split. At the end of the day randomly submit one of the QA-Verification splits to the District Lab for testing. Additional verification samples can be taken at any time or location. When additional verification samples are taken the contractor must test the Verification companion split of this sample and include the results in the QC program (Test Summary Sheet). The Agency reviews the computer files of the plant's control settings. REMARKS: See Note # 3 & Note #7	TSS
2360	Mixture Properties (QC/QA, Verification*) Maximum Specific Gravity Lab Manual 1807	2360	Contractor performs test 1807 REMARKS: See Note #1, Note #2, & Note #4.	The inspector will witness all QC mixture sampling and take possession of their QA-Verification split of this sample immediately after the sample is split. At the end of the day randomly submit one of the QA-Verification splits to the District Lab for testing. Additional verification samples can be taken at any time or location. When additional verification samples are taken the contractor must test the Verification companion split of this sample and include the results in the QC program (Test Summary Sheet). REMARKS: Note # 3 & Note #7	TSS
2360	Mixture Properties (QC/QA, Verification*) Gyratory Bulk Specific Gravity - 2 Specimen Average, Lab Manual 1806, 1820	2360	Contractor performs test 1806 REMARKS: See Note #1, Note #2, & Note #6.	The inspector will witness all QC mixture sampling and take possession of their QA-Verification split of this sample immediately after the sample is split. At the end of the day randomly submit one of the QA-Verification splits to the District Lab for testing. Additional verification samples can be taken at any time or location. When additional verification samples are taken the contractor must test the Verification companion split of this sample and include the results in the QC program (Test Summary Sheet). REMARKS: See Note #3 & Note #7.	TSS

II. Bituminous Construction Items for Specification 2360 (cont.)

Pay Item No.	Test Type	Spec. No.	Producer/Contractor Testing	Agency Testing	Form No.
2360	Mixture Properties (QC/QA, Verification*) Adjusted Asphalt Film Thickness (AFT), Air Voids, Fines to effective, CAA, FAA and Gradation. Lab Manual 1203, 1206, 1214, 1808, 1854	2360	Verification Companion testing from Agency split sample is required and used as a QC sample once per day. Bituminous mixes composed entirely of Class A and/or Class B aggregates are not required to be tested for CAA (Coarse Aggregate Angularity). REMARKS: See Note #1, Note #2, Note #4, Note #5, & Note #6. The production start-up testing rates for the CAA and FAA are 1 per 1000 tons for the first 2000 tons. After 2000 tons, 2 test per day for at least two days. Then CAA and FAA at a rate of 1 test per week, if the CAA and FAA exceed the requirements by 8% and 5% respectively, otherwise test daily.	The inspector will witness all QC mixture sampling and take possession of their QA-Verification split of this sample immediately after the sample is split. At the end of the day randomly submit one of the QA-Verification splits to the District Lab for testing. Additional verification samples can be taken at any time or location. When additional verification samples are taken the contractor must test the Verification companion split of this sample and include the results in the QC program (Test Summary Sheet). REMARKS: See Note # 3 & Note #7.	TSS
2360	Core Density and Thickness Lab manual 1810	2360	Contractor cuts two cores at each location. In the laboratory, measure, and saw cores into separate lifts. Sawing of cores into separate lifts is required. Schedule the approximate time of testing during normal project work hours so the Agency may observe and record the saturated surface dry and immersed weight of the cores. A completed Core Density Incentive/Disincentive worksheet is to be submitted to the Laboratory (Agency field or District/Division).	Complete core stationing spreadsheet to determine core locations and then mark all coring locations on the pavement. Once the Contractor has measured and sawed the Agency companion cores transport them to the Agency field lab or District Lab for testing. Transport the cores as soon as possible to the testing lab taking care to prevent damage due to improper handling or exposure to heat. Selects at least one of the two companion cores per lot to test for verification. REMARKS: Note #3 & Note #6.	Core Density Worksheet Core Density Incentive/ Disincentive worksheet.
2360	Tensile Strength Ratio (T.S.R.) (QC/QA) Lab Manual 1813	2360	Sample as directed by the Engineer. When testing is required, complete testing within 72 hours after the sample is taken.	Test as directed by the Engineer. When testing is required, complete testing within 72 hours after the sample is taken.	TSR Worksheet

II. Bituminous Construction Items for Specification 2360 (cont.)

C. BITUMINOUS MATERIALS for Specification 2360

Only Bituminous Materials from Certified Sources are allowed for use. The most current list of Certified Sources: http://www.dot.state.mn.us/products/index.html

Minimum Sample Sizes:

Quality Sample Size for Lab Submittal:

Asphalt Binder (QA)/Cutback Asphalt (QA)	1qt (1 L) Metal can with pressure fit lid
Emulsified Asphalt (QA)	½ gal (2 L) plastic

Pay Item No.	Test Type	Spec. No.	Producer/Contractor Testing	Agency Testing	Form No.
2360	Asphalt Binder (QA only)	3151.2	Asphalt Supplier QC testing is the responsibility of the bituminous material supplier as part of the Combined State Binder Certification program. During Asphalt Mixture Production Obtain asphalt binder samples from a sampling valve located between the pump and the drum. Sample each type of asphalt binder used in mixture production after 50 tons of mixture has been produced, then sample at a rate of one per 250,000 gal [1,000,000 L]. A minimum of 1 gallon of binder must be drawn and wasted from the sampling valve before the actual sample is drawn. For batch plants, obtain the asphalt binder sample from the weigh pod. Provide asphalt binder sample in clean one L (1 qt.) steel container. The Inspector will monitor the sampling the Contractor performs.	Asphalt Supplier Random sampling of bituminous material at the asphalt supplier is discussed in the Combined State Binder Certification program arranged by the MnDOT Chemical Laboratory. During Asphalt Mixture Production Observe contractor personnel taking sample from sampling valve and submit to MnDOT Chemical Lab	2413 Asphalt Sample Identification Card
2355 2356 2357	Emulsified Asphalt (QA only)	3151.2	QC testing is the responsibility of the bituminous material supplier as part of the Combined State Binder Certification program. Tack Coat During mixture production the Contractor will sample first shipment, then submit one sample per 50,000 gal (200,000 L). Sample emulsified asphalt in clean ½ gal (2 L) plastic container with wide screw top and send to MnDOT Chemical Lab within 7 days of sampling.. Sample all emulsified asphalt from the distributor.	Asphalt Supplier Random sampling of bituminous material at the asphalt supplier is discussed in the Combined State Binder Certification program arranged by the MnDOT Chemical Laboratory. Tack Coat Observe contractor personnel taking sample from the distributor and submit to MnDOT Chemical Lab.	2413 Asphalt Sample Identification Card

II. Bituminous Construction Items for Specification 2360 (cont.)

Pay Item No.	Test Type	Spec. No.	Producer/Contractor Testing	Agency Testing	Form No.
2357 2358	Cutback Asphalt (QA only)	3151.2	QC testing is the responsibility of the bituminous material supplier as part of the Combined State Binder Certification program. Tack Coat During mixture production the Contractor will sample first shipment, then submit one sample per 50,000 gal (200,000 L). Sample emulsified asphalt in clean ½ gal (2 L) plastic container with wide screw top and send to MnDOT Chemical Lab within 7 days of sampling.. Sample all emulsified asphalt from the distributor.	Asphalt Supplier Random sampling of bituminous material at the asphalt supplier is discussed in the Combined State Binder Certification program arranged by the MnDOT Chemical Laboratory. Tack Coat Observe contractor personnel taking sample from the distributor. Cutback Asphalt should only be used in cold temperature applications with the Engineer's approval. Contact Bituminous Engineering Unit for cold temperature application guidelines.	2413 Asphalt Sample Identification Card

Note #1 All QA test samples shall be from split samples.
If a member of the monitoring team observes the Contractor Test, note and sign under remarks.
The Project Engineer is responsible for:
1.) Reviewing control charts & Test summary sheets for accuracy and completeness,
2.) Checking sampling and testing procedures,
3.) Discussing QC problems with the Contractor,
4.) Obtaining Verification Samples

Note #2 For Mixture Quality Management, acceptance will be based on Contractor's test results as verified by MnDOT test results.

Note #3 When a member of a monitoring team observes the Contractor test, note and sign under remarks.

Note #4

How to calculate the number of tests per day	Production Start-up testing rates (first 2000 tons of production)	Production testing rates (after 2,000 tons of mixture produced)
Divide daily tonnage by 500 and round up to next whole number	1 test/ 500 tons	
Divide daily tonnage by 1000 and round up to next whole number		1 test/ 1000 tons

Note #5 MnDOT projects will require the calculated Adjusted Asphalt Film Thickness (AFT). VMA will still be calculated for informational purposes, but will not be used for acceptance criteria. The adjusted AFT will be calculated each time a gradation test is required.

Note #6 Random number generation and determination of random sample location shall be consistent with the MnDOT Bituminous Manual Section 5-693.7 Table A or Section 5 of ASTM D3665. The Engineer may approve alternate methods of random number generation.

Note #7 QA samples retained for 10 calendar days and tested, if needed.

III. Construction Items for Bituminous Specialty Items include the following:

- **2363 Permeable Asphalt Stabilized Stress Relief Course (PASSRC) and Permeable Asphalt Stabilized Base (PASB)**
- **2354 Micro-Surfacing**
- **2355 Bituminous Fog Seal**
- **2356 Bituminous Seal Coat**
- **2356 Otta Seal**
- **2353 Ultra-Thin Bonded Wearing Course (UTBWC)**
- **2357 Bituminous Tack Coat**
- **2365 Stone Matrix Asphalt (SMA)**

Only Bituminous Materials from Certified Sources are allowed for use. The most current list of Certified Sources:
http://www.dot.state.mn.us/products/index.html

SAMPLE TYPE	DESCRIPTION	SAMPLE LOCATION DETERMINED BY	SAMPLE TAKEN BY	SAMPLE TESTED BY
QC	Quality Control Testing performed by Contractor. Also known as Process Control Testing.	Contractor	Contractor	Contractor
QA	Quality Assurance Testing performed by the Agency. This test is performed on a companion sample to the Contractor's QC sample.	Contractor Contractor (mixture) Agency (density cores)	Contractor	Agency
Verification	A sample to assure compliance of the Contractor's Quality Control program. The results shall be included as part of the QA Testing Program.	Agency	Agency	Agency
Verification Companion	A companion sample to the Agency's Verification sample provided to the Contractor. The Contractor is required to test this sample. The results shall be used as part of the QC program.	Agency	Agency	Contractor
IAST	The Independent Assurance Sampling and Testing assures testers are sampling and testing properly and that equipment is calibrated correctly.	Agency	Contractor or Agency	Contractor or Agency

III. Construction Items for Bituminous Specialty Items (cont.)

Pay Item Number	Test Type	Material Spec. No.	Minimum Contractor Quality Control Testing Rate Minimum Sample Size	Minimum Agency QA/Verification (Acceptance)	Form No.
(a) 2363 (b) 2363	**1. Mix Design (Pre-Production)** (a) PASSRC (b) PASB	2363	Complete 1 Job Mix Formula (gradation blend only) per mix Submit to agency: 100 lbs. each coarse agg., 35 lbs. each fine agg. & 4 qt. asphalt binder	Agency Performs Mix Design	Approved Mix Design Report
(c) 2354	(c) Micro-Surfacing	2354	Complete 1 mix design per aggregate source. See specification or special provision. Submit to Agency: 150 lbs. aggregate	Review Submitted Mix Design (See Notes 1 & 5)	Approved Mix Design Report
(d) 2356	(d) Bituminous Seal Coat	2356	At least two weeks before beginning construction complete 1 design per mix and provide information to Engineer. See specification or special provision. Submit to Agency: 150 lbs. aggregate	Review Submitted Mix Design (See Notes 1 & 5)	
(e) 2353	(e) UTBWC	2353 UTBWC	Complete and submit 1design per mix	Review Submitted Mix Design	Approved Mix Design Report
(f) 2365	(f) SMA	2365 SMA	Complete 1 design per mix Submit to Agency: 80 lb. (35 kg) - bituminous mixture plus 6 Gyratory specimens for TSR testing. 150lbs +4 aggregate from JMF blend for VCA 80 lbs. each coarse agg. & 30 lbs. each fine agg. for quality testing	Review & verify Submitted Mix Design Test as directed by the Engineer	Approved Mix Design Report
(a) 2363 (b) 2363	**2.Production Gradation** (a) PASSRC (b) PASB Lab manual 1202, 1203	2363	One per 1,000 ton with a minimum of one per day Submit to Agency: 35 lbs. Note # 2	1/day	Test Report
(c) 2354	(c) Micro-Surfacing Lab manual 1202, 1203	2354	Stockpile: 1/1,500 tons (min. 1/ day) Machine Hopper: 1/500 tons (min. 1/day) Submit to Agency: 30 lbs.	1 per project	Test Report

III. Construction Items for Bituminous Specialty Items (cont.)

Pay Item Number	Test Type	Material Spec. No.	Minimum Contractor Quality Control Testing Rate Minimum Sample Size	Minimum Agency QA/Verification (Acceptance)	Form No.
(d) 2356 (e) 2356	(d) Bituminous Seal Coat (e) Otta Seal Lab manual 1202, 1203	2356	Stockpile: 1/1,500 tons (min. 1/ day) Chip Spreader Hopper: 1/day Submit to Agency : 30 lbs. from Hopper	1 per project for Bituminous Seal Coat obtained from Contractor's split sample from Chip Spreader Hopper 1/day for Otta Seal	Test Report
(a) 2363 (b) 2363	**3. Production % Crushing (CAA)** (a) PASSRC (b) PASB Lab manual 1214	2363	One per 1,000 with a minimum one per day Submit to Agency: 35 lbs. from Belt	1/day	Test Report
(a) 2354	**4. Moisture (In Aggregate)** (a)Micro-Surfacing Grading & Base manual, 5-692.245.B	2354	Machine Hopper: 1/500 tons (min. 3/day) Submit to Agency: 2 lbs.	1/day	Test Report
(a) 2354	**5. Sand Equivalence** (a) Micro-Surfacing AASHTO T 176	2354	1/day	See Note 1	Test Report
(a)2356	**6. Flakiness Index** (a) Bituminous Seal Coat Lab Manual 1223	2356	Sample taken from first load on fist day Submit to Agency: 30 lbs.	See Note 1	Test Report
(a) 2353	**7. Bituminous Mixture Tests** (a) UTBWC Lab Manual 1203, 1807, 1852, 1853, 1854	2353 UTBWC	Tests: % AC, Gradation, Max Gravity, Adjusted AFT Rate: (1/300 tons, min. 1 per day) Note #3: Submit to Agency:20 lbs. (1 cylinder from truck box)	1 per day	TSS

III. Construction Items for Bituminous Specialty Items (cont.)

Pay Item Number	Test type	Spec. No.	Minimum Contractor Quality Control Testing Rate Minimum Sample Size	Minimum Agency QA/Verification (Acceptance)	Form
(b) 2363	(b) PASSRC, PASB Bit Manual	3151	Test: Asphalt spot check Rate: minimum one per day		Test Report
c) 2365	(c) SMA Lab Manual 1203,1204, 1205, 1211, 1214, 1806, 1807, 1808, 1813, 1853, 1854, 1855, AI SP-2 AASHTO T305	2365 SMA	**Tests:** % AC, Gradation, Max Gravity, Bulk Gravity, Voids, VMA, CAA, Draindown, voids in coarse aggregate (VCA) fines/effective asphalt. **Rate:** (1/1000 tons, min. 1 per day) Aggregate sp. gravity, mix moisture content to be tested as directed by the Engineer See Note: #3 Submit companion 1 per day to agency: 65 lb. (30 kg) 3 full 6" by 12" cylinder molds	**Tests:** % AC, Gradation, Max Gravity, Bulk Gravity, Voids, VMA, CAA, voids in coarse aggregate (VCA) fines/effective asphalt. See Note # 3 & Note #4	TSS
(b) 2353	**8. Asphalt Binder** (b) UTBWC	2353 UTBWC 3151	QC testing is the responsibility of the bituminous material supplier. Random sampling is arranged by the MnDOT Chemical Laboratory. Asphalt Binder: First load, then 1/250,000 gal. 1 qt. Emulsified Asphalt: First load, then 1/50,000 gal. ½ gal*	Observe contractor personnel taking sample from sampling valve and submit to MnDOT Chemical Lab.	Test Report
(c) 2354 (d) 2356 (e) 2356 (f) 2357	(c) Micro-Surfacing (d) Bituminous Seal Coat (e) Otta Seal (f) Bituminous Tack Coat	2354, 2356, 3151	QC testing is the responsibility of the bituminous material supplier. Random sampling is arranged by the MnDOT Chemical Laboratory.	First load, then 1 / 50,000 gal. ½ gal*	Test Report
(g) 2363 (h) 2365	(g) PASSRC, PASB (h) SMA	3151, 2365 SMA	QC testing is the responsibility of the bituminous material supplier. Random sampling is arranged by the MnDOT Chemical Laboratory. Asphalt Binder (1 qt.): First load, then 1/250,000 gal. Note: SMA to be test as in Section C. BITUMINOUS MATERIALS for Specification 2365	Observe contractor personnel taking sample and submit to MnDOT Chemical Lab. Note: SMA to be test as in Section C. BITUMINOUS MATERIALS for Specification 2365.	Test Report

III. Construction Items for Bituminous Specialty Items (Cont.)

Pay Item Number	Test type	Spec. No.	Minimum Contractor Quality Control Testing Rate Minimum Sample Size	Minimum Agency QA/Verification (Acceptance)	Form
(a) 2354	**9. Asphalt Binder Application Rate** (a) Micro-Surfacing	2354	Verify Application rate 3/day	Verify Application rate 1/day	
(b) 2355 (c) 2356 (d) 2356 (e) 2357	(b) Fog Seal (c) Bituminous Seal Coat (d) Otta Seal (e) Bit Tack Coat	2355, 2356, 2357	Verify Application rate 1/day	Verify Application rate 1/day	

***Use plastic containers for Emulsified Asphalt Samples. Send to MnDOT Chemical Lab within 7 days of sampling.**
Note 1: Agency will test at their discretion.
Note 2: Run test on gradation sample taken from aggregate belt
Note 3: TSR testing on production mixture is at the discretion of the Engineer.
Note 4: Agency is not required to run draindown testing on QA/Verification samples.
Note 5: Submit copy of mix design to Project Engineer and copy Grading and Base Engineer.

IV. Concrete Construction Items (www.dot.state.mn.us/materials/concrete.html)

The testing rates shown in this Schedule of Materials Control are **minimums**. Take as many tests as necessary to ensure quality concrete.

All samples shall be taken in a random manner using an appropriate number generator.

All field samples shall be taken at the point of placement unless otherwise allowed by the Engineer.

It is recommended that the Agency Plant Monitor be present during critical pours, such as superstructure or paving concrete (i.e. 3A21, 3Y16, 3Y33, 3Y36, 3Y46, JMF mixes).

If any field test fails, reject the concrete or if the Producer makes adjustments to the load to meet requirements, record the adjustments on the Certificate of Compliance and the Weekly Concrete Report. Retest the load and record the adjusted test results. Make sure the next load is tested before it gets into the work.

If batching adjustments are made at the plant, test the adjusted load, before it gets into the work. Continue to test the concrete when test results are inconsistent or marginal.

The first load of concrete for any pour must have passing air content and slump results, prior to placing.

Material not meeting requirements shall not knowingly be placed in the work. If failing concrete inadvertently gets placed in the work, review either the MnDOT Standard Specifications for Construction or contact the Concrete Engineering Unit for monetary deductions recommendations.

It is recommended that the Agency representative continually monitor the progress of all concrete pours in the field and review Certificates of Compliances. It is not a recommended practice to only perform minimum testing requirements and leave the pour.

Should circumstances arise on a project which makes the testing rate impractical, contact the Concrete Engineering Unit.

DEFINITIONS

	Description	Sample Location Determined By	Sample Taken By	Sample Tested By
QC	Quality Control Testing performed by Contractor. Also known as Process Control Testing.	Contractor	Contractor	Contractor
QA	Quality Assurance Testing performed by the Agency. This test is performed on a companion sample to the Contractor's QC sample.	Contractor	Contractor	Agency
Verification	A sample to assure compliance of the Contractor's Quality Control program. The results shall be included as part of the QA Testing Program.	Agency	Agency	Agency
Verification Companion	A companion sample to the Agency's Verification sample provided to the Contractor. The Contractor is required to test this sample. The results shall be used as part of the QC program.	Agency	Agency	Contractor
IAST	The Independent Assurance Sampling and Testing assures testers are sampling and testing properly and that equipment is calibrated correctly.	Agency	Contractor or Agency	Contractor or Agency

IV. Concrete Construction Items (cont.) (www.dot.state.mn.us/materials/concrete.html)

Concrete Plant Batching Materials

Remarks:

(1) All materials must come from certified or qualified sources. All certified sources must state so on the delivery invoice.

(2) The most current list of certified/approved sources can be found at www.dot.state.mn.us/products.

Sample Sizes:

Cementitious: 5 lb. (2 kg)

Admixture: 1/2 pt. (0.25 L) Producer obtains samples from dispensing tubes. Store samples in a plastic container.

Water: 1 gal (3.5 L) Store sample in a clean glass or plastic container.

Pay Item No.	Material	Spec. No.	Minimum Required Sampling Rate for Laboratory Testing	Form No.
2301 2302 2401 2405 2411 2412 2422 2452 2461 2506 2511 2514 2519 2521 2531 2533 2545 2550 2554 2557 2564 2565	Portland Cement Slag Blended Cement	3101 3102 3103	For certified ready-mix and concrete paving: 1 sample when the plant is certified. Take an additional sample: 1) At 6 months, if producing Agency concrete, 2) If the plant changes sources, or 3) As the Contract requires. For precast concrete: 1 sample every 3 months during Agency production The Producer obtains and stores the sample in a sealed container provided by the Agency, and includes the supplier's delivery invoice from which the sample is obtained. Take additional samples as directed by the Concrete Engineer	24300 ID Card Cement Samples
	Fly Ash	3115		24308 ID Card Fly Ash Samples
	Admixtures (Accelerating, Retarding, Water-Reducing, Air-Entraining, etc.)	3113	For all concrete: 1 sample when the plant is certified. Take additional samples: 1) At 3 month intervals during Agency production, 2) If the plant changes sources, or 3) As the Contract requires. The Producer obtains and stores the sample in a sealed container provided by the Agency. Take additional samples as directed by the Concrete Engineer	2410 Sample ID Card
	Water	3906	1 sample from any questionable source	2410 Sample ID Card

IV. Concrete Construction Items (cont.) (www.dot.state.mn.us/materials/concrete.html)

Certified Ready-Mix - Concrete Plant Production

Remarks:

(1) Mix design is provided by MnDOT unless otherwise specified in the Contract.
(2) All gradation and quality tests require companion samples. Samples taken at location identified on Contact Report located at plant.
(3) Perform Quality testing as directed by the Concrete Engineer.
(4) Record all gradation weights in metric.

****Use Certified Ready-Mix - Concrete Plant Production testing rates schedule when:**

a) The entire concrete paving project is < 3,500 cu. yd. (2,900 m^3)
b) When a secondary plant is used to provide minor work.

Minimum Sample Sizes:

Gradation Test:		**Moisture Test:**		**Quality Sample Size for Lab Submittal:**	
3/4" Plus, #4 (+19 mm)	25 lb. (12 kg)	Coarse Aggregate	2000 g	3/4" Plus, #4 (+19 mm)	50 lb. (24 kg)
3/4" Minus, #67 (–19 mm)	10 lb. (5 kg)	Fine Aggregate	500 g	3/4" Minus, #67, #7 (–19 mm)	30 lb. (15 kg)
CA-70, #7	6 lb. (2.5 kg)			#89, Fine Aggregate	30 lb. (15 kg)
CA-80, #89, Sand	1.1 lb. (500 g)				

Pay Item No.	Test Type	Spec. No.	Producer/Contractor Testing	Agency Testing	Form No.
2301** 2302 2401 2411 2452 2461 2506 2511 2514 2519 2521 2531 2533 2545 2550 2554 2557 2564 2565	Gradation Testing (QC/QA) (5-694.145 and 5-694.148)	2461 3126 3137	When over 20 yd^3 (m^3) of Agency concrete produced per day: **Coarse:** 1 per 200 yd^3 (m^3) **Fine:** 1 per 200 yd^3 (m^3) Passing aggregate gradations are required prior to the start of concrete production each day. Performing testing on representative material at the end of the most recent day of production is allowed. Washing the fine aggregate gradation (QC) sample is not required when the result on the -75µm (#200) sieve of the unwashed sample is less than 1.0%, Hold QA (QC companion) samples until they are picked up by the Agency monitor. Discard after 14 calendar days if not picked up. **For Contractor Mix Designs utilizing an approved JMF:** 1 per 400 yd^3 (m^3) or completed every 4 hours, whichever results in the higher sampling rate.	None	21763 Concrete Aggregate Worksheet (QC/QA) 2449 Weekly Concrete Aggregate Report 21765 Concrete Aggregate Worksheet JMF (QC/QA)

IV. Concrete Construction Items (cont.) (www.dot.state.mn.us/materials/concrete.html)

Certified Ready-Mix - Concrete Plant Production (cont.)

Pay Item No.	Test Type	Spec. No.	Producer/Contractor Testing	Agency Testing	Form No.
2301** 2302 2401 2411 2452 2461 2506 2511 2514 2519 2521 2531 2533 2545 2550 2554 2557 2564 2565	Gradation Testing (Verification/ Verification Companion) (5-694.145 and 5-694.148)	2461 3126 3137	Test the Verification Companion sample. Complete on the day the sample was taken. Wash all fine aggregate Verification Companion samples.	**Coarse and Fine:** 1 Verification sample per week when Agency production is 1 or 2 days per week. 2 Verification samples per week when Agency production is 3 or more days per week. **For small quantities:** When less than **25 yd^3 (m^3)** of Agency concrete is produced **per week,** Verification samples are not required Include verification companion results on Sample ID Card.	2449 Weekly Concrete Aggregate Report 24143 Weekly Certified Ready-Mix Plant Report (Verification)
	Quality Testing including Coarse Aggregate Testing on - #200 (-75µm) (5-694.146)	3126 3137	Test at Contractor's Discretion	1 test each fraction per month **For all bridge deck concrete poured during the month:** If the monthly quality was not tested for 3137.2.D.2, take 1 additional quality sample for each coarse aggregate fraction and test for 3137.2.D.2. Identify quality samples with a "Q" on the Sample ID Card and the Quality companion sample. Write 3137.2.D.2 on bridge deck concrete Sample ID Cards.	2410 Sample ID Card
	Aggregate Moisture Testing (QC) (5-694.142)	2461	**When over 20 yd^3 (m^3) of Agency concrete produced per day:** **Coarse and Fine:** 1 completed every 4 hours. Complete the initial moisture content and adjust the batch water prior to the start of concrete production each day. If weather conditions allow, performing moisture testing on representative material at the end of production the prior evening is allowed. In this event, the four-hour rate will commence with the first pour of the day, regardless if it is placed in Agency or private work.	None	2152 Concrete Batching Report

IV. Concrete Construction Items (cont.) (www.dot.state.mn.us/materials/concrete.html)

Concrete Pavement - Concrete Plant Production

Remarks:

(1) Mix Design is Contractor's responsibility with review by MnDOT unless otherwise specified in the Contract.

(2) Use Certified Ready-Mix - Concrete Plant Production testing rates schedule when:

a) The entire concrete paving project is < 3,500 cu. yd. (2,900 m^3) **b)**

b) When a secondary plant is used to provide minor work.

(3) When w/c incentives apply according to 2301:

a) Contractor QC Technician and Agency Plant Monitor are required to be present during the entire pour. **If w/c incentives do not apply, the Agency Plant Monitor shall monitor as necessary to ensure compliance with the requirements of the Contract.**

b) A certified ready-mix plant shall be **dedicated (provides concrete only to the concrete paving project)**.

(4) All gradation samples shall be taken in the presence of the Agency, unless otherwise authorized by the Engineer. All samples shall be taken off the belt leading to the weigh hopper unless otherwise approved by the Engineer. All gradation and quality tests require companion samples.

(5) Perform Quality testing as directed by the Concrete Engineer.

Minimum Sample Sizes:

Gradation Test:		**Moisture Test:**		**Quality Sample Size for Lab Submittal:**		**75µm (#200) Coarse Aggregate Sample Size**	
3/4" Plus, #4 (+19 mm)	25 lb. (12 kg)	Coarse Aggregate	2000 g	3/4" Plus, #4 (+19 mm)	50 lb. (24 kg)	3/4" Plus, #4 (+19 mm)	10 lb. (5000 g)
3/4" Minus, #67 (–19 mm)	10 lb. (5 kg)	Fine Aggregate	500 g	3/4" Minus, #67, #7 (–19 mm)	30 lb. (15 kg)	3/4" Minus, #67, #7 (–19 mm)	6 lb. (2500 g)
CA-70, #7	6 lb. (2.5 kg)			#89 Fine Aggregate	30 lb. (15 kg)		
CA-80, #89, Sand	.1 lb. (500 g)						

<table>
<tr><th>Pay Item No.</th><th>Test Type</th><th>Spec. No.</th><th colspan="2">Producer/Contractor Testing</th><th colspan="2">Agency Testing</th><th>Form No.</th></tr>
<tr><td rowspan="3">2301</td><td rowspan="3">Gradation Testing (QC/QA) (5-694.145 and 5-694.148)</td><td rowspan="3">3126
3137</td><td><u>For a concrete paving batch plant:</u>

<u>When over 250 yd^3 (m^3) is produced per day:</u> 1 per 1500 yd^3 (m^3) or completed 1 per ½ day, whichever results in the higher sampling rate.</td><td><u>For a certified ready-mix plant:</u>

<u>When over 20 yd^3 (m^3) is produced per day:</u> 1 per 400 yd^3 (m^3) or completed every 4 hours, whichever results in the higher sampling rate.</td><td colspan="2">Test the first 4 QA samples of production each time the Contractor mobilizes the plant in a new calendar year or changes aggregate sources.</td><td rowspan="3">21764 Concrete Aggregate Worksheet JMF

Well-graded Concrete Aggregate Worksheet</td></tr>
<tr><td colspan="2"></td><td><u>For a concrete paving batch plant:</u>
1 per day on randomly selected samples thereafter.</td><td><u>For a certified ready-mix plant:</u>
1 per 1000 yd^3 (m^3) or 1 per week, whichever results in higher sampling rate on randomly selected samples thereafter.</td></tr>
<tr><td colspan="2">Performing testing on representative material at the end of the most recent day of production is allowed.

If well-graded aggregate incentives apply: Use the Contractor's gradation results for well-graded aggregate incentive calculations as verified by Agency testing</td><td colspan="2">Identify the gradation samples with "QA Gradation" on the Sample ID Card and include the JMF Number and the QC Gradation results.
If Coarse Aggregate Quality Incentive/Disincentives apply: The Agency may also use the QA gradation sample for the Coarse Aggregate Quality incentive/disincentive testing. In this case, notify the Producer/Contractor to double the QC/QA gradation sample size.</td></tr>
</table>

IV. Concrete Construction Items (cont.) (www.dot.state.mn.us/materials/concrete.html)

Concrete Pavement - Concrete Plant Production (cont.)						
Pay Item No.	**Test Type**	**Spec. No.**	**Producer/Contractor Testing**	**Agency Testing**		**Form No.**
2301	Coarse Aggregate Testing on - #200 (-75µm) (QC/QA) (5-694.146)	3137	Test the first sample and then at least 1 of the next 3 samples on the first day of production and each time the Contractor mobilizes the plant, changes aggregate sources, or the cleanliness of the coarse aggregate is in question. 1 test per day thereafter **Test these samples at the plant**.	**<u>For a concrete paving batch plant:</u>** 1 randomly selected sample on the first day of production and each time the Contractor mobilizes the plant, changes aggregate sources, or the cleanliness of the coarse aggregate is in question. 1 test per week thereafter **Test these samples at the plant.**	**<u>For a certified ready-mix plant:</u>** 1 randomly selected sample on the first day of production and each time the Contractor mobilizes the plant, changes aggregate sources, or the cleanliness of the coarse aggregate is in question. 1 per 1000 yd^3 (m^3) or 1 per week, whichever results in the higher sampling rate on randomly selected samples thereafter.	21764 Concrete Aggregate Worksheet JMF - Paving
	Aggregate Moisture Testing (QC/Verification) **(5-694.142)**		**<u>For a concrete paving batch plant:</u>** **If w/c incentives do not apply:** 1 per 1000 yd^3 (m^3) or completed every 4 hours, whichever results in the higher sampling rate**.**	**<u>For a certified ready-mix plant:</u>** **If w/c incentives do not apply:** 1completed every 4 hours.	**<u>For a concrete paving batch plant:</u>** **If w/c incentives apply:** 1 per 1000 yd^3 (m^3) or completed every 4 hours, whichever results in the higher sampling rate. Take initial samples for aggregate moisture testing within the first 250 yd^3 (m^3).	**<u>For a certified ready-mix plant:</u>** **If w/c incentives apply:** 1 per 200 yd^3 (m^3) or completed every 4 hours, whichever results in the higher sampling rate. Take initial samples for aggregate moisture testing within the first 100 yd^3 (m^3).	Concrete W/C Ratio Calculation Worksheet
			Complete the initial moisture content and adjust the batch water prior to the start of concrete production each day. If weather conditions allow, performing moisture testing on representative material at the end of production the prior evening is allowed.		**If w/c incentives apply:** Use aggregate moisture results for determining the water content to calculate the w/c ratio incentive/disincentive. **Do not leave samples unattended.**	

IV. Concrete Construction Items (cont.) (www.dot.state.mn.us/materials/concrete.html)

Concrete Pavement - Concrete Plant Production (cont.)

Pay Item No.	Test Type	Spec. No.	Producer/Contractor Testing	Agency Testing		Form No.
2301	Water Content Verification Testing **(Microwave Oven Verification) (5-694.532)**	2301	Obtain the plastic concrete sample at the plant.	**If w/c incentives apply:** Microwave oven verification testing to verify the w/c ratio is completed in conjunction with Agency aggregate moisture testing. **Do not leave samples unattended.**		Concrete W/C Ratio Calculation Worksheet
				<u>For a concrete paving batch plant:</u> Take initial sample for microwave oven verification testing within the first 250 yd^3 (m^3). At least one additional verification test should be taken if more than 1,000 yd^3 (m^3) is produced in a day.	**<u>For a certified ready-mix plant:</u>** Take initial sample for microwave oven verification testing within the first 100 yd^3 (m^3). At least one additional verification test should be taken if more than 400 yd^3 (m^3) is produced in a day.	
	Unit Weight (QC) (5-694.542)		Test one load of concrete per day at the plant.	None		
	Air Content for Type 3 Concrete (QC) (5-694.541)	2301 2461	Test the first load of concrete at the plant.	None		

IV. Concrete Construction Items (cont.) (www.dot.state.mn.us/materials/concrete.html)

Concrete Pavement - Concrete Plant Production (cont.)

Pay Item No.	Test Type	Spec. No.	Producer/Contractor Testing	Agency Testing	Form No.
2301	Quality Testing including Coarse Aggregate Testing on - #200 (-75µm)	3126 3137	**Prior to concrete production:** Test the Agency's pre-production sample at the Contractor's discretion **During concrete production:** Test the -#200 (-75µm) on the Quality companion sample the day it was sampled. All other testing is at the Contractor's discretion	**Prior to concrete production for the primary concrete plant:** Obtain pre-production samples for quality testing at least 16 hours prior to concrete production. Samples may be taken from the stockpile and the -#200 (-75µm) test may be performed at the lab instead of at the plant at the discretion of the Engineer. **If the Entire Project is < 3,500 cu. yd. (2,900 m^3), pre-production sampling is not required.** **During concrete production:** 1 randomly selected test each fraction every 20,000 yd^3 (m^3) of production. Split the Quality sample 4 ways: 1) Provide 2 quarters of the sample to the Producer/Contractor. 2) Test the -#200 (-75µm) on the quality sample at the plant the day it was sampled. 3) Submit the remaining sample to the lab for quality testing including testing on the -#200 (-75µm) sieve. Identify quality samples with a "Q" and record the QC and QA -#200 (-75µm) test results on the Sample ID Card. Identify the Quality Companion samples with a "Q". **See additional requirements for first sand quality sample under ASR Testing.**	2410 Sample ID Card
2301	Alkali Silica Reactivity (ASR) Testing	2301	None	1 per paving project per sand source Provide one 5 lb. sample of: 1) cement 2) supplementary cementitious material (fly ash or slag), and 3) sand. Write "Project Specific ASR Testing" on all 3 Sample ID cards. **ASR Testing is not required if the entire project is <3,500 cu. yd. (2,900 m^3).**	2410 Sample ID Card 24300 ID Card Cement Samples 24308 ID Card Fly Ash Samples

IV. Concrete Construction Items (cont.) (www.dot.state.mn.us/materials/concrete.html)

Concrete Pavement - Concrete Plant Production (cont.)

<table>
<tr><th>Pay Item No.</th><th>Test Type</th><th>Spec. No.</th><th>Producer/Contractor Testing</th><th>Agency Testing</th><th>Form No.</th></tr>
<tr><td>2301</td><td>Coarse Aggregate Quality Testing for Incentive/ Disincentive</td><td>3137</td><td>Test at Contractor’s discretion</td><td>If coarse aggregate quality incentives apply:
Test the Class B aggregates for % absorption and Class C aggregates for % carbonate including any other tests necessary to make those determinations.

Sample the 2 largest fractions in accordance with the following table and 2301:

Coarse Aggregate Quality Incentive/Disincentive Sampling Rates
<table><tr><th>Plan Concrete cu. yd. [cu. m]</th><th>Samples per fraction (n)</th></tr><tr><td>3,500 – 7,500 [2,900 – 6,250]</td><td>3</td></tr><tr><td>7,501 – 10,000 [6,251 – 8,500]</td><td>5</td></tr><tr><td>10,001 – 25,000 [8,501 – 21,000]</td><td>10</td></tr><tr><td>25,001 – 50,000 [21,001 – 42,000]</td><td>15</td></tr><tr><td>> 50,000 [42,000]</td><td>20</td></tr></table>Identify incentive samples on the Sample ID Card with “I/D”</td><td>2410 Sample ID Card

Coarse Aggregate Quality Incentive/ Disincentive Worksheet</td></tr>
</table>

IV. Concrete Construction Items (cont.) (www.dot.state.mn.us/materials/concrete.html)

Concrete Field Materials (Refer to Metallic Materials and Metal Products for sampling requirements for concrete reinforcement.)

Sample Sizes:

Joint Materials:

Hot Poured Elastomeric:	5 lb. (2.26 kg)	Take samples from application wand, store in steel (1 gal) container.	Preformed Elastomeric:	6 ft. (2 m)
Silicone Joint Sealer:	1 pt. (0.5 L)	Store sample in steel container.	Preformed:	2 ft^2(0.25 m^2)

Curing Materials:

Burlap: 1 yd^2 (m^2)

Paper and Plastic: 2 ft^2(0.25 m^2)

Membrane Compound 1 qt. (1 L) If sampling is required, materials must be thoroughly stirred or agitated immediately prior to taking sample. Store sample in steel container and cover immediately.

Pay Item No.	Material	Spec. No.	Minimum Required Field Sampling Rate	Form No.
2301 2302 2401 2411 2514 2521 2531	Preformed	3702	Visual Inspection	2410 Sample ID Card
2301 2302 2401	Preformed Elastomeric Type	3721	1 per lot Only joint materials from qualified sources are allowed. The most current lists can be found at www.dot.state.mn.us/products	
	Silicone Joint Sealer	3722		
	Hot Poured Elastomeric Type	3723 3725		
2301 2302 2401 2411 2514 2520 2521 2531 2533	Burlap	3751	Visual Inspection	
	Paper	3752	Visual Inspection - Must be white opaque	
	Membrane Curing Compound	3754 3754AMS 3755	Visual Inspection – Use only Pre-Approved Curing Compounds. Refer to the approved products list of curing compounds for **pre-approved** lots at http://www.mrrapps.dot.state.mn.us/CuringCompoundProducts/curingcompounds.aspx	
	Plastic	3756	Visual Inspection -Must be white opaque and free from holes. A Certificate of Compliance shall be submitted to the Project Engineer from the Manufacturer certifying that the plastic complies with AASHTO M171.	

IV. Concrete Construction Items (cont.) (www.dot.state.mn.us/materials/concrete.html)

Concrete Field Testing – General Concrete

Pay Item No.	Test Type	Spec. No.	Agency Testing	Form No.
2302 2452 2461 2506 2511 2514 2520 2521 2531 2533 2545 2550 2554 2557 2564 2565	Air Content for Type 3 Concrete (Verification) (5-694.541)	2461	1 per 100 yd^3 (m^3) Test first load each day per mix Test when adjustments are made to the m	2448 Weekly Concrete Report If concrete quantities on the entire project total < 100 yd^3 (m^3), document the test results Weekly Concrete Report or on Form 02415 or Form 2403 Inspection Report for Small Quantities.
	Slump (Verification) (5-694.531)	2461	1 per 300 yd^3 (m^3) Test first load each day per mix Test as necessary to verify passing slump No slump testing required for slipform placement	
	Concrete Temperature (Verification) (5-694.550)	2461	Record temperature each time air content, slump, or strength test specimen is performed/fabricated.	
	Compressive Strength (Verification) (5-694.511)	2461	1 cylinder (28-day) per 300 yd^3 (m^3) Cast up to three (3) control cylinders. Any additional control cylinders are the responsibility of the Contractor. MnDOT standard cylinder mold size is 4 x 8 inch (100 x 200 mm). If aggregate has a maximum size greater than 1-1/4 inch (31.5 mm), use 6 x 12 inch (150 x 300 mm) molds.	2409 ID Card Concrete Test Cylinder

IV. Concrete Construction Items (cont.) (www.dot.state.mn.us/materials/concrete.html)

Concrete Field Testing – Bridge Concrete				
Pay Item No.	**Test Type**	**Spec. No.**	**Agency Testing**	**Form No.**
2401 2406 2411 2461	Air Content for Type 3 Concrete (Verification) (5-694.541)	2461	1 per 100 yd^3 (m^3) Test first load each day per mix Test when adjustments are made to the m	2448 Weekly Concrete Report .
	Slump (Verification) (5-694.531)	2461	1 per 100 yd^3 (m^3) Test first load each day per mix Test as necessary to verify passing slump No slump testing required for slipform placement	
	Concrete Temperature (Verification) (5-694.550)	2461	Record temperature each time air content, slump, or strength test specimen is performed/fabricated.	
	Compressive Strength (Verification) (5-694.511)	2461	1 cylinder (28-day) per 100 yd^3 (m^3) Cast up to three (3) control cylinders. Any additional control cylinders are the responsibility of the Contractor. MnDOT standard cylinder mold size is 4 x 8 inch (100 x 200 mm). If aggregate has a maximum size greater than 1-1/4 inch (31.5 mm), use 6 x 12 inch (150 x 300 mm) molds.	2409 ID Card Concrete Test Cylinder

Concrete Field Testing – Cellular Concrete				
Pay Item No.	**Test Type**	**Spec. No.**	**Agency Testing**	**Form No.**
2519	Compressive Strength (Verification) **(5-694.511)**	2461 2519	1 set of 4 cylinders (28-day) per day 4 x 8 inch (100 x 200 mm) cylinders shall be filled in two equal lifts, do not rod the concrete, lightly tap the sides, cover and move to area with minimal or no vibration. Do not disturb for 24 hours.	2409 ID Card Concrete Test Cylinder

IV. Concrete Construction Items (cont.) (www.dot.state.mn.us/materials/concrete.html)

Concrete Field Testing – Concrete Pavement

Pay Item No.	Test Type	Spec. No.	Contractor Testing	Agency Testing	Form No.
2301	Air Content Before Consolidation for Type 3 Concrete (QC/QA) (5-694.541)	2301 2461	1 per 300 yd^3 (m^3) or 1 per hour, whichever is less Test first load each day per mix	1 correlation air test per day	2448 Weekly Concrete Report
	Air Content After Consolidation for Type 3 Concrete (QC/QA) (5-694.541)	2301 2461	Test 1 air content per ½ day of slip form paving to establish an air loss correction factor (ACF). See Special Provisions for additional information.	1 air test per day	
	Slump (QC/QA) (5-694.531)	2461	**For fixed form placement:** 1 per 300 yd^3 (m^3) and as directed by the Engineer Test first load each day per mix **For slipform placement:** No slump testing is required	**For fixed form placement:** 1 slump test per day **For slipform placement:** No slump testing is required	
	Concrete Temperature (QC/QA) (5-694.550)	2461	Record temperature each time air content, slump or strength test specimen is performed/fabricated by the Contractor.	Record temperature each time air content, slump or strength test specimen is performed/fabricated by the Agency.	
	Flexural Strength (QC) (5-694.521)	2301 2461	1 beam (28-day) per day - Make additional control beams as necessary. - Control beams shall be made within the last hour of concrete poured each day. Fabricate beams, deliver beams to curing site, and clean beam boxes. Cylinders may be substituted for beams at the discretion of the Engineer	Supply beam boxes, cure, and test beams. MnDOT standard beam box size is 6” x 6” x 20” unless other sizes or types are approved by the Concrete Engineer.	2162 Concrete Test Beam Data
	Concrete Pavement Texture (QC)	2301	1 per 1000 linear feet per lane of concrete pavement at locations determined by the Agency. All adjoining lanes shall be tested at the same location if paved at the same time. The Contractor supplies all materials necessary to perform the required testing.	Determine texture testing locations using random numbers.	Concrete Texture Worksheet

IV. Concrete Construction Items (cont.) (www.dot.state.mn.us/materials/concrete.html)

Concrete Field Testing – Concrete Pavement (cont.)					
Pay Item No.	**Test Type**	**Spec. No.**	**Contractor Testing**	**Agency Testing**	**Form No.**
2301	Thickness (QC/Verification)	2301	The Contractor drills concrete cores at locations determined by the Agency. The Contractor probes the plastic concrete at locations determined by the Agency.	Determine probing and coring locations using random numbers. Initial pavement at core locations and re-initial the sides of specimens after coring to clearly verify their authenticity.	24327 Field Core Report Probing and Coring Report
2301	Surface Smoothness	2301 2399	Contractor provides MnDOT certified inertial profiler results for the entire project as required by the Contract.	None	Concrete Profile Summary Worksheet

IV. Concrete Construction Items (cont.) (www.dot.state.mn.us/materials/concrete.html)

Concrete Field Testing - Low Slump Concrete for Bridge Deck Overlays

Remarks:

(1) Mix design is provided by MnDOT on the back of the Form 21412 Weekly Report of "Low Slump Concrete" unless otherwise specified in the Contract.
(2) All field gradation samples shall be taken by the Agency. All gradation and quality tests require companion samples.
(3) Perform Quality testing as directed by the Concrete Engineer.

Minimum Sample Sizes:

Gradation Test:

CA-70, #7	6 lb. (2.5 kg)
Sand	1.1 lb. (500 g)

Quality Sample Size for Lab Submittal:

Coarse Aggregate	50 lb. (24 kg)
Fine Aggregate	30 lb. (15 kg)

Pay Item No.	Test Type	Spec. No.	Contractor Testing	Agency Testing	Form No.
2404	Gradation and Quality Testing including Coarse Aggregate Testing on - #200 (-75µm) (QC/Verification) (5-694.145, 5-694.146) and 5-694.148))	3126 3137	Prior to concrete production, the Contractor shall provide the Agency with: • Aggregate pit numbers • 1 passing gradation result per aggregate fraction per source No quality test results are required. Test companion samples at Contractor's discretion.	1 per aggregate fraction prior to concrete production and each time aggregate is delivered to the site. Identify quality samples with a "Q" on the Sample ID Card and the Quality companion sample.	2410 Sample ID Card 21412 Weekly Report of "Low Slump Concrete"
	Air Content for Type 3 Concrete (Verification) (5-694.541)	2461	None	1 per 15 yd^3 (m^3) Test at beginning of pour each day	
	Slump (Verification) (5-694.531)	2461	None	1 per 15 yd^3 (m^3) Test at beginning of pour each day For concrete from a concrete-mobile, allow mix to hydrate 4 to 5 minutes before slump test to assure all cement is saturated.	
	Compressive Strength (Verification) (5-694.511)	2461	None	1 cylinder (28-day) per 30 yd^3 (m^3)	2409 ID Card Concrete Test Cylinder

IV. Concrete Construction Items (cont.) (www.dot.state.mn.us/materials/concrete.html)

Concrete Field Testing – Concrete Pavement Repair (CPR) for 3U18

Remarks:

(1) Mix design is provided in accordance with MnDOT Spec 3105 unless otherwise specified in the Contract.
(2) Testing rates apply to concrete that is produced on site.
(3) All field gradation samples shall be taken by the Agency. All gradation and quality tests require companion samples.
(4) Perform Quality testing as directed by the Concrete Engineer.

Minimum Sample Sizes:

Gradation Test:

3/4" Minus, #67 (–19 mm)	10 lb. (5 kg)
CA-70, #7	6 lb. (2.5 kg)
CA-80, #89, Sand	1.1 lb. (500 g)

Quality Sample Size for Lab Submittal:

Fine Aggregate	30 lb. (15 kg)

Pay Item No.	Test Type	Spec. No.	Contractor Testing	Agency Testing	Form No.
2302	Gradation and (QC/Verification) (5-694.145 and 5-694.148)	3126 3137	Prior to concrete production, the Contractor shall provide the Agency with: • Aggregate pit numbers • 1 passing gradation result per aggregate fraction per source. Test companion samples at Contractor's discretion.	1 per aggregate fraction prior to concrete production and each time aggregate is delivered to the site.	2410 Sample ID Card
	Quality Testing including Coarse Aggregate Testing on - #200 (-75µm) (5-694.146)	3126 3137	No quality test results are required.	1 test each aggregate fraction per source The Agency may use the gradation results for the Quality Samples as a substitute for 1 required field gradation. Identify quality samples with a "Q" on the Sample ID Card and the Quality companion sample.	2410 Sample ID Card
	Air Content for Type 3 Concrete (Verification) (5-694.541)	2461	None	1 per 15 yd^3 (m^3) Test at beginning of pour each day.	CPR1 Field Testing Report for CPR

IV. Concrete Construction Items (cont.) (www.dot.state.mn.us/materials/concrete.html)

Concrete Field Testing – Concrete Pavement Repair (CPR) for 3U18 (cont.)

Remarks:

(4) Mix design is provided in accordance with MnDOT Spec 3105 unless otherwise specified in the Contract.
(5) Testing rates apply to concrete that is produced on site.
(6) All field gradation samples shall be taken by the Agency. All gradation and quality tests require companion samples.
(5) Perform Quality testing as directed by the Concrete Engineer.

Minimum Sample Sizes:

Gradation Test:

3/4" Minus, #67 (–19 mm)	10 lb. (5 kg)
CA-70, #7	6 lb. (2.5 kg)
CA-80, #89, Sand	1.1 lb. (500 g)

Quality Sample Size for Lab Submittal:

Fine Aggregate	30 lb. (15 kg)

Pay Item No.	Test Type	Spec. No.	Contractor Testing	Agency Testing	Form No.
2302	Slump (Verification) (5-694.531)	2461	None	1 per 15 yd^3 (m^3) Test at beginning of pour each day. Allow mix to hydrate 5 minutes before slump test to assure all cement is saturated.	
	Compressive Strength (Verification) (5-694.511)	2461	None	1 cylinder (28-day) per 30 yd^3 (m^3)	2409 ID Card Concrete Test Cylinder

IV. Concrete Construction Items (cont.) (www.dot.state.mn.us/materials/concrete.html)

Concrete Field Testing – Dowel Bar Retrofit (DBR)

Remarks:

(1) Mix Design is Contractor's responsibility with review by MnDOT unless otherwise specified in the Contract.
(2) Testing rates apply to concrete that is produced on site. (Not from a certified ready-mix plant.)
(3) All field gradation samples shall be taken by the Agency. All gradation and quality tests require companion samples.
(4) Perform Quality testing as directed by the Concrete Engineer.

Minimum Sample Sizes:

Gradation Test:
CA-80, #89, Sand 1.1 lb. (500 g)

Quality Sample Size for Lab Submittal:
Coarse Aggregate 50 lb. (24 kg)
Fine Aggregate 30 lb. (15 kg)

Pay Item No.	Test Type	Spec. No.	Contractor Testing	Agency Testing	Form No.
2302	Gradation and Quality Testing including Coarse Aggregate Testing on - #200 (-75µm) (QC/Verification) (5-694.145, 5-694.146) and 5-694.148)	3126 3137	Prior to concrete production, the Contractor shall provide the Agency with: • Aggregate pit numbers • 1 passing gradation result per aggregate fraction per source. No quality test results are required. Test companion samples at Contractor's discretion.	1 per aggregate fraction prior to concrete production and each time aggregate is delivered to the site. Identify quality samples with a "Q" on the Sample ID Card and the Quality companion sample.	2410 Sample ID Card
	Dowel Bar Retrofit Material Compressive Strength (Verification) (5-694.511)	2301 2302	None	During the pre-production test operations: 1 set of 3 cylinders tested at a rate as directed by the Engineer. Testing may need to be repeated if any problems with the dowel bar retrofit material are encountered. First day of production: 1 set of 3 cylinders tested at a rate as directed by the Concrete Engineer. After the first day of production: 1 cylinder per day during production tested at rate determined by Engineer to determine opening to traffic strength.	2409 ID Card Concrete Test Cylinder

V. Landscaping and Erosion Control Items

Pay Item No	Kind of Material	Spec. No.	Minimum Required Acceptance Testing (Field Testing Rate)	Minimum Required Sampling Rate for Laboratory Testing	Sample Size	Notes
2571 2574 2575	1. Topsoil borrow [a]	3877.2	None	From each source: One composite sample for the first 765 m^3 (1,000 Cu yd.). Small quantities under 75 m^3 (100 Cu yd.), no sample required.	10 kg (20 lb.)	[a] Certificate of Compliance showing meets specifications. Testing for topsoil for fertility by Contractor at a Certified Soils Lab.
2571 2575 2577	2. Plant Stock & Landscape Materials [b]	3861 and 2571.2A1	Field Inspection at Job Site, submit itemized report for each shipment [c.]			[b] Preliminary inspection will not be done at the source. Material must be in accordance with the Inspection and Contract Administration Guidelines for MnDOT Landscape Projects. [c] Utilize "Inspection and Contract Administration Guidelines for MnDOT Landscape Projects" to determine and measure minimum and maximum criteria thresholds. The following documentation must be provided: 1. A MnDOT Certificate of Compliance for Plant Stock, Landscape Materials, and Equipment 2. A valid copy of a nursery stock (dealer or grower) certificate registered with the MN Dept. of Agric. And/or a current nursery certificate/license from a state or provincial Dept. of Agric. for each plant stock supplier. 3. A copy of the most recent Certificate of Nursery Inspection for each plant stock supplier. 4. Plant material shipped from out-of-state nursery vendors subject to pest quarantines must be accompanied by documentation certifying all plants shipped are free of regulated pests. 5. Bills of lading (shipping documents) for all materials delivered. 6. Invoices for all materials to be used. 7. Each bundle, bale, or individual plant must be legibly and securely labeled with the name and size of each species or variety.
2502 2573 2575 2577	3. Erosion Control Blanket [d]	3885	Visual Inspection	Random - See Footnote [d]		[d] Check Web site for list of approved products.. www.dot.state.mn.us/products

V. Landscaping and Erosion Control Items (cont.)

Pay Item No	Kind of Material	Spec. No.	Minimum Required Acceptance Testing (Field Testing Rate)	Minimum Required Sampling Rate for Laboratory Testing	Sample Size	Notes
2573 2577	4. Erosion Control Netting [e]	3885	Visual Inspection			[e] Check Web site for list of approved products. www.dot.state.mn.us/products
2573	5. Silt Fence [f]	3886	Check Product Label. Obtain Certificate of Compliance with MARV values			[f] Check Approved/Qualified Products List (A/QPL) of accepted geotextiles www.dot.state.mn.us/products
2573	6. Flotation Silt Curtain [g]	3887	Visual Inspection			[g] Accepted, based on manufacturers' certification of compliance. Check weight of fabric.
2573 2575	7. Erosion Stabilization Mat [h]	3885	Visual Inspection			[h] Check Web site for list of approved products. www.dot.state.mn.us/products
2573	8. Sediment Control Logs	3897	Visual Inspection			Meet specifications
2573	9. Flocculants [i]	3898	Visual Inspection	None		[i] Certificate of Compliance and MSDS to the Engineer.
2571 2575	10. Fertilizer [j]	3881	Visual Inspection			[j] Bagged: Inspected on the basis of guaranteed analysis. Rate based on fertility analysis of slope dressing/topsoil. Bulk: Inspector to obtain copy of invoice of blended material stating analysis. Check the type specified.
2571 2575	11. Agricultural Lime [k]	3879	One gradation test for each 180 Metric Ton (200 ton)			[k] Contractor must supply amount of ENP (Equivalent Neutralizing Power) for each shipment.
2575 2577	12. Mulch Material A. Type 3 Mulch - Certified Weed Free (Certified sources only) [l]	3882	Visual Inspection, Check if from Certified Vendor by Minnesota Crop Improvement Association. Must be tagged, grain straw only.			[l] Certified mulch will be indicated by label.

V. Landscaping and Erosion Control Items (cont.)

Pay Item No	Kind of Material	Spec. No.	Minimum Required Acceptance Testing (Field Testing Rate)	Minimum Required Sampling Rate for Laboratory Testing	Sample Size	Notes
2571 2575 2577	13. Mulch Material B. Type 6 Mulch – Woodchips	3882	Visual Inspection. Obtain Certificate of Compliance.			All wood chips supplied by a supplier outside the Emerald Ash Borer quarantine area or have an Emerald Ash Borer Compliance Agreement with the MDA.
2502 2575 2577	14. Seeds A. Seeds (Certified Vendors Only) (Mixes 22-000 and 25-000 series) [m]	3876	Check for Certified Vendor tag from Minnesota Crop improvement Association. If materials are on hand and past the twelve months, testing must be done.			[m] Periodic sampling taken by Office of Environmental Services. Any moldy or insect contaminated seed must be rejected.
2502 2575 2577	14. Seeds B. Native Seed (Mixes 30-000 series) certified seed only [n]	3876	Check if from Certified Vendor by Minnesota Crop Improvement Association, Must be tagged. If materials are on hand and past the twelve months, testing must be done.			[n] Certified seed will be indicated by label on containers. Reject all moldy or insect contaminated seed. Periodic sampling taken by Office of Environmental Services.
2575	15. Sod [o]	3878	A certified tag by Minnesota Crop Improvement Association for Salt tolerant sod. Final Visual Inspection at site.			[o] A Certificate of Compliance must be furnished by the producer to the Engineer for the type of sod supplied showing correct grass varieties.
2571 2575	16. Compost A. Compost Certified Source [p]	3890	Visual Inspection			[p] Check Approved/Qualified Products List (A/QPL), retain Certificate of Compliance.
2571 2575	17. Compost B. Compost Non-Certified Source [q]	3890	Inspection of source 6 weeks prior to delivery.			[q] Retain Certificate of Compliance, 6 weeks prior to delivery.
2575	18. Hydraulic Soil Stabilizer [r]	3884				[r] Check Approved/Qualified Products List (A/QPL). Installer needs to show certificate of training.

VI. Chemical Items

Pay Item No.	Kind of Material	Spec. No.	Minimum Required Acceptance Testing (Field Testing Rate)	Minimum Required Sampling Rate for Laboratory Testing	Sample Size	Notes
2401	Asphalt Plank	3204	Visual Inspection	1 per 1,000 plank or less of each thickness in each shipment	3 – 1 m (yd.) pieces samples from different planks	
2131	Calcium Chloride	3911	Visual Inspection	Liquid: 1 per 40,000 L (1 per 10,000 gal) Dry: 1 per shipment	0.5 L (1 pint) or 0.5 kg (1 lb.) in Plastic Container	
2131	Magnesium Chloride	3912	Visual Inspection	1 per 40,000 L (1 per 10,000 gal.)	0.5 L (1 pint) in Plastic Container	
2331	Hot-Pour Crack Sealant for Crack Sealing/Filling	3719 3723 3725	Visual Inspection	1 per lot. Take samples from application wand. Use caution when handling hot containers	2.26 kg (5 lb.) in a 1gal steel container.	
2331	Pavement Joint Adhesive	Special Provisions	Visual Inspection	1 per lot. Take samples from application wand. Use caution when handling hot containers	2.26 kg (5 lb.) in a 1gal steel container	2410 Sample ID Card –including manufacturer and lot number
2481	Waterproofing Materials Membrane Waterproofing System	3757	Visual Inspection	1 per shipment (Membrane Only)	0.1 m^2 (1 Sq. Ft)	Only waterproofing systems from qualified sources are allowed for use. The most current list can be found at www.dot.state.mn.us/products Membrane Waterproofing System: The manufacturer shall submit a one square foot sample of the membrane along with a letter of Certification and test results stating that the membranes meet the requirements of this specification. Other components of the waterproofing system do not need to be sampled for testing.

VI. Chemical Items (cont.)

Pay Item No.	Kind of Material	Spec. No.	Minimum Required Acceptance Testing (Field Testing Rate)	Minimum Required Sampling Rate for Laboratory Testing	Sample Size	Notes
2481	Waterproofing Materials Three Ply System Asphalt Primer	3165	Visual Inspection	1 per shipment	0.5 L (1 pt.) in steel container	
2481	Waterproofing Materials Three Ply System Waterproofing Asphalt	3166	Visual Inspection	1 per shipment	0.5 L (1 pt.) in steel container	
2481	Waterproofing Materials Three Ply System Fabric	3201	Visual Inspection	1 per shipment	1 m^2 (1 Sq. yd.)	
2582	Waterborne Latex Traffic Marking Paint.	3591	Visual Inspection	1 per lot	0.5 L (1 pint)	**Form 02415** List batch numbers and retain Certificate of Compliance. Only traffic marking paints from Qualified Products List are allowed for use. The most current Qualified Products list can be found at www.dot.state.mn.us/products
2582	Epoxy Traffic Paint	3590	Visual Inspection	1 Part A per lot 1 Catalyst Part B per lot	0.5 L (1 pint)	**Form 02415** List batch numbers and retain Certificate of Compliance. Only traffic marking paints from Qualified Products List are allowed for use. The most current Qualified Products list can be found at www.dot.state.mn.us/products
2582	Traffic Marking Paint	Special Provisions	Visual Inspection	1 Part A per lot 1 Catalyst Part B per lot	0.5 L (1 pint)	**Form 02415** List batch numbers and retain Certificate of Compliance. Only traffic marking paints from Qualified Products List are allowed for use. The most current Qualified Products list can be found at www.dot.state.mn.us/products For traffic marking paints other than Waterborne Latex and Epoxy. See Special Provision for Qualified Products List.
2564	Non-Traffic Marking Paints	3500 Series Special Provisions	Visual Inspection		0.5 L (1 pint)	**Form 02415** List batch numbers and retain Certification of Compliance. For all others, see Special Provisions. Send color sample to Chemical Laboratory for color matching.

VI. Chemical Items (Cont.)

Pay Item No.	Kind of Material	Spec. No.	Minimum Required Acceptance Testing (Field Testing Rate)	Minimum Required Sampling Rate for Laboratory Testing	Sample Size	Notes
2478	Bridge Structural Steel Paint	3520	Visual Inspection	Certificate of Compliance with each batch/lot for each component of the paint system to the Engineer. Provide a color "Draw Down" sample to the MnDOT Chemical Laboratory for verification of the finish coat color		**Form 02415** List batch numbers and retain Certificate of Compliance. Only paints from Approved Products List are allowed for use. The most current Approved Products List can be found at www.dot.state.mn.us/products
	Exterior Masonry Paint	3584	Visual Inspection	1 per lot Provide a color "Draw Down" sample to the MnDOT Chemical Laboratory for verification of the finish coat color.	0.5 L (1 pint)	**Form 02415** List batch numbers and retain Certificate of Compliance Only paints from Approved Products List are allowed for use. The most current Approved Products List can be found at www.dot.state.mn.us/products
	Noise Wall Stain	Special Provisions	Visual Inspection	Certificate of Compliance for each batch/lot of paint. Provide a color "Draw Down" sample to the MnDOT Chemical Laboratory for verification of the finish coat color.		**Form 02415** List batch numbers and retain Certificate of Compliance Only paints from Approved Products List are allowed for use. The most current Approved Products List can be found at www.dot.state.mn.us/
2582	Drop-on Glass Beads	3592	Visual Inspection	1 per lot	1 L (qt.)	**Form 02415** List batch numbers and retain Certificate of Compliance Only glass beads from Qualified Products List are allowed for use. The most current Qualified Products List can be found at www.dot.state.mn.us/products
2502 2581 2582	Pavement Marking Tape	3354 3355 Special Provisions	Visual Inspection	1 clean sample of each color per lot	3 m (3 yds.)	**Form 02415** List batch numbers and retain Certificate of Compliance. Only pavement marking tape from the Qualified Products List is allowed for use. The most current Qualified Products List can be found at www.dot.state.mn.us/products

VI. Chemical Items (cont.)

Pay Item No.	Kind of Material	Spec. No.	Minimum Required Acceptance Testing (Field Testing Rate)	Minimum Required Sampling Rate for Laboratory Testing	Sample Size	Notes
2540 2563 2564 2565 2582	Signs and Markers	3352	Visual Inspection	None unless material suspect		**Form 02415** Only Signs and Markers from Qualified Products List are allowed for use. The most current Qualified Products List can be found at www.dot.state.mn.us/products

VII. Metallic Materials and Metal Products

Pay Item No.	Kind of Material	Spec. No.	Minimum Required Acceptance Testing (Field Testing Rate)	Minimum Required Sampling Rate for Laboratory Testing	Sample Size	Notes
2554	1. Guard Rail A. Fittings - Splicers, Bolts, etc.	3381	Visual Inspection	Bolts: One Post bolt and 4 splice bolts with nuts for each 1,000 units or less.		**Form 02415 or 2403** To be approved before use. Materials from H&R may be pre-sampled and tested. Call the MnDOT inspector at 218-846-3613 to see if material has been approved. For non-pre-tested, submit laboratory samples at required rate. For small quantities, lab samples are not required, but document on Form 02415 or 2403 and maintain in project file. Small Quantities: Rail Sections - 20 or less Terminals - 10 or less Post Bolts - 100 or less, Splice Bolts - 100 or less
2554	1.B.i. Non-High Tension Guard Rail Cable	3381	Visual Inspection	1 sample from each spool	1.2 m (4 ft.)	**Form 02415 or 2403** See VII.1.A.
2554	1. B.ii. High Tension Guard Rail Cable	Special Provisions	Visual Inspection	None, unless material is suspect (see note)	1.2 m (4 ft.)	Sample at the rate of 1/50,000 ft. if the strand appears damaged or suspect (Accepted as part of system)
2554	1. Guard Rail C. Structural Plate Beam	3382	Visual Inspection	One sample from one edge of each 200 rail sections or one sample of each 100 terminal sections	Full depth x 0.25 m (full depth x 10")	**Form 02415 or 2403** See VII.1.A.
2554	D. Plate Beam Guide Posts	3382	Visual Inspection	None, unless material is suspect		**Form 02415 or 2403**
2554	E. High Tension Guide Posts	Spec. Provisions	Visual Inspection	None, unless material is suspect		**Form 02415 or 2403** (Accepted as part of system)

VII. Metallic Materials and Metal Products (cont.)

Pay Item No.	Kind of Material	Spec. No.	Minimum Required Acceptance Testing (Field Testing Rate)	Minimum Required Sampling Rate for Laboratory Testing	Sample Size	Notes
2545 2554 2564	2. Steel Sign Posts	3401	Visual Inspection & Certification from Contractor of compliance with Domestic source requirement under 1601, if applicable.	Two posts per shipment of each mass per unit length. Submit shortest full sized length of each weight, not a scrap piece.	See note	**Form 02415 or 2403** Check domestic steel requirement under 1601 No Samples for project quantities less than 20
2554 2557	3.Posts for Traffic & Fence A.Steel fence posts, brace bars, and rails	3403 3406	Visual Inspection	One sample per 500 pieces. Submit full length for posts used in the ground (line, terminal, "C" and anchor posts), and 5' length of top rail and brace bar.		**Form 02415 or 2403** Check domestic steel requirement under 1601 Special Provision. Retain Certificate of Compliance and certified mill analysis in project file. See link for certification form on right side of page, www.dot.state.mn.us/materials/lab.html
2557	3. Fence B. Components: includes cup, cap, nut, bolt, end clamp, tension band, truss rod tightener, hog ring, tie wire, tension stretcher bar, truss rod, clamp, & tension wire	3376	Visual Inspection	1 each of cup, cap, nut, bolt, end clamp, tension bands, truss rod tightener, 12 hog rings, 6 tie wires, 1 tension stretcher bar; 1 truss rod, cut to 2-foot min. with threaded section, 3 feet of tension wire.		**Form 02415 or 2403** Check domestic steel requirement under 1601 Special Provision. Retain Certificate of Compliance in the project file. See link for certification form on right side of page, www.dot.state.mn.us/materials/lab.html
2557	3. Fence C. Gates	3379	Visual Inspection	No sample required. See notes.		**Form 02415 or 2403** Check domestic steel requirement under 1601 Special Provision. Retain Certificate of Compliance in the project file. See link for certification form on right side of page, www.dot.state.mn.us/materials/lab.html
2557	3. Fence D. Barbed Wire	3376	Visual Inspection.	One sample per 50 rolls	1 m (3 ft.)	**Form 02415 or 2403** Check domestic steel requirement under 1601 Special Provision. Retain Certificate of Compliance in the project file. See link for cert. form on right side of page, www.dot.state.mn.us/materials/lab.html

VII. Metallic Materials and Metal Products (cont.)

Pay Item No.	Kind of Material	Spec. No.	Minimum Required Acceptance Testing (Field Testing Rate)	Minimum Required Sampling Rate for Laboratory Testing	Sample Size	Notes
2557	3. Fence E. Woven Wire Fabric	3376	Visual Inspection	One full height sample per 50 rolls	1 m (3 ft.)	**Form 02415 or 2403** Check domestic steel requirement under 1601 Special Provision. Retain Certificate of Compliance in the project file. See link for cert. form right side of page, www.dot.state.mn.us/materials/lab.html
2557	3. Fence F. Chain Link Fabric	3376	Visual Inspection	One full height sample for each 5,000 ft. of fencing.	0.3 m (1 ft.)	**Form 02415 or 2403** Check domestic steel requirement under 1601 Special Provision. Retain Certificate of Compliance in the project file. See link for certification form on right side of page, www.dot.state.mn.us/materials/lab.html
2402	4. Water Pipe and other Piping Materials	3364, 3365, 3366 & Special Provisions				**Form 02415 or 2403** Check domestic steel requirement under 1601 Special Provision. To be identified & tested if necessary prior to use. See Special Provisions.
2201 2301 2401 2405 2411 2412 2433 2452 2472 2514 2531 2533 2545 2564	5. Reinforcing Steel A. Bars – Uncoated	3301	Visual Check for Size and Grade Marking	No Field Sample Necessary		**Form 02415 or 2403** For Uncoated bars - Retain Certificate of Compliance and Certified Mill Analysis in Project File.

VII. Metallic Materials and Metal Products (cont.)

Pay Item No.	Kind of Material	Spec. No.	Minimum Required Acceptance Testing (Field Testing Rate)	Minimum Required Sampling Rate for Laboratory Testing	Sample Size	Notes
2201 2301 2401 2405 2411 2412 2433 2452 2472 2514 2531 2533 2545 2564	5. Reinforcing Steel B. Bars - Epoxy Coated	3301	Visual Check for Size and Grade Marking and "Inspected" tag	One sample (1 bar) of each size bar for each day's coating production	1 m (3 ft.)	**Form 02415 or 2403** For Epoxy-Coated bars, steel will be tagged "Inspected" when it has been sampled and tested by MnDOT prior to shipment, and it will be tagged "Sampled" when testing has not been completed prior to shipment. If the Epoxy-Coated bars are not tagged "Sampled" or "Inspected", submit samples with copies of the , Certificate of Compliance, and Certified Mill Analysis. Retain originals of the Certificate of Compliance and Certified Mill Analysis in the project file.
2401	5. Reinforcing Steel C. Bars Stainless Steel	Special Provisions		One sample (2 Bars) per heat per bar size	1 m (3 ft.)	Submit copies of mill test reports with samples, retain originals in project file
2401 2411 2452 2472 2564	5. Reinforcing Steel D. Spirals	3305		One per shipment	1 m (3 ft.)	**Same as 5.B**
2201 2301 2401 2411 2412 2472 2531	5. Reinforcing Steel E. Steel Fabric	3303	Visual Inspection	No Field Sample Necessary		Retain Certificate of Compliance in project file.
2201 2301 2401 2411	5. Reinforcing Steel F. Dowel Bars	3302		One Dowel Bar from each shipment	Full Size Dowel Bars	For all types of dowels – Each project shall have a Certificate of Compliance from the Manufacturer certifying that all materials used in fabrication of the dowel bars and baskets comply with all applicable specifications. The Manufacturer shall maintain all records necessary for certification by project. The Certificate of Compliance shall be submitted to the Project Engineer.

VII. Metallic Materials and Metal Products (cont.)

Pay Item No.	Kind of Material	Spec. No.	Minimum Required Acceptance Testing (Field Testing Rate)	Minimum Required Sampling Rate for Laboratory Testing	Sample Size	Notes
2401 2405	5. Reinforcing Steel G. Prestressing or Post-Tensioning Strand	3348		One sample (2 strands) from each heat (see **Notes**)	1.8 m (6 ft.)	Submit one copy of mill certificate and one copy of the stress-strain curve representative of the lot with the samples. For most manufacturers, a heat equals a production lot, and an individual lot, pack, or reel is a subset of a heat/production lot.
2402 2506 2565	6. Drainage and Electrical Castings	3321 2471 2565	Visual Inspection	All castings: Three tensile bars to be cast with each heat at Foundry and submitted to the lab by an approved Foundry*. See 3321.		**Form 02415 or 2403** Call Maplewood Laboratory at 651-366-5540 for list of approved foundries, or see website. Inspect in the field and retain Form 02415 or 2403 in project file, showing name of foundry and quantity
2401 2402 2411 2433 2545 2554 2564 2565	7. Anchor Rods (Cast in Place)	3385 3391 3392	Check Approved/Qualified Products list, mill certifications, and visual inspection at the project site.	Pre-approved (see notes) or one complete anchor rod assembly including nuts and washers from each lot supplied.		Pre-approved system requires supplier to submit a sample to the Department yearly for each anchor rod grade. Test results of sample must verify compliance to product specifications.
2401 2402 2411 2433 2545 2554 2564 2565	8. Structural Fasteners, both coated and uncoated	3385 3391 3392	Visual inspection and verify material is on APL/QPL, or submit sample for verification testing if not on APL/QPL	Pre-approved (see notes) or two complete assemblies for each size, length, diameter, grade and finish, per increment of 1000 or fraction thereof		Pre-approved system requires the supplier to submit a sample yearly for each fastener size, grade and finish. Test results must verify compliance to specifications. If not on the APL/QPL, submit two complete assemblies for each size, length, grade and finish per increment of 1000 or fraction thereof of fasteners supplied for the project, including nuts and washers from each lot supplied. Obtain passing test results before installation.
2401 2411 2433	9. Anchorages (Drilled In)	Special Provisions	Visual Inspection	No laboratory samples required		Note: Before installation, verify that anchorages are on the qualified products list www.dot.state.mn.us/products

VII. Metallic Materials and Metal Products (cont.)

Pay Item No.	Kind of Material	Spec. No.	Minimum Required Acceptance Testing (Field Testing Rate)	Minimum Required Sampling Rate for Laboratory Testing	Sample Size	Notes
2402	10. Structural Steel A. For Steel Bridge – Beams, Girders, Diaphragms, etc.	2471	Structural Metals Inspection Tag and field inspection for damage/defects	None		Structural metals products will be inspected at the plant and will be shipped with a Structural Metals Inspection Tag. An inspection confirmation report will be completed by Structural Metals Inspection staff and sent to the field personnel. Only approved suppliers are allowed to supply Structural Metals products. A list of approved suppliers can be found on the Bridge Office web site: http://www.dot.state.mn.us/bridge/
2402 2405	10. Structural Steel B. For Concrete Girders-Diaphragms and sole plates	2471	Structural Metals Inspection Tag and field inspection for damage/defects	None		Structural metals products will be inspected at the plant and will be shipped with a Structural Metals Inspection Tag. An inspection confirmation report will be completed by Structural Metals Inspection staff and sent to the field personnel. Only approved suppliers are allowed to supply Structural Metals products. A list of approved suppliers can be found on the Bridge Office web site: http://www.dot.state.mn.us/bridge/
2402	10. Structural Steel C.. Expansion joints	2471	Structural Metals Inspection Tag and field inspection for damage/defects	None		Structural metals products will be inspected at the plant and will be shipped with a Structural Metals Inspection Tag. An inspection confirmation report will be completed by Structural Metals Inspection staff and sent to the field personnel. Only approved suppliers are allowed to supply Structural Metals products. A list of approved suppliers can be found on the Bridge Office web site: http://www.dot.state.mn.us/bridge/
2402	10. Structural Steel D. Steel Bearings	2471	Structural Metals Inspection Tag and field inspection for damage/defects	None		Structural metals products will be inspected at the plant and will be shipped with a Structural Metals Inspection Tag. An inspection confirmation report will be completed by Structural Metals Inspection staff and sent to the field personnel. Only approved suppliers are allowed to supply Structural Metals products. A list of approved suppliers can be found on the Bridge Office web site: http://www.dot.state.mn.us/bridge/

VII. Metallic Materials and Metal Products (cont.)

Pay Item No.	Kind of Material	Spec. No.	Minimum Required Acceptance Testing (Field Testing Rate)	Minimum Required Sampling Rate for Laboratory Testing	Sample Size	Notes
2402	10. Structural Steel E. Railing-Structural tube and ornamental	2471	Structural Metals Inspection Tag and field inspection for damage/defects	None		Structural metals products will be inspected at the plant and will be shipped with a Structural Metals Inspection Tag. An inspection confirmation report will be completed by Structural Metals Inspection staff and sent to the field personnel. Only approved suppliers are allowed to supply Structural Metals products. A list of approved suppliers can be found on the Bridge Office web site: http://www.dot.state.mn.us/bridge/
2402	10. Structural Steel F. Drainage Systems	2471	Structural Metals Inspection Tag and field inspection for damage/defects	None		Structural metals products will be inspected at the plant and will be shipped with a Structural Metals Inspection Tag. An inspection confirmation report will be completed by Structural Metals Inspection staff and sent to the field personnel. Only approved suppliers are allowed to supply Structural Metals products. A list of approved suppliers can be found on the Bridge Office web site: http://www.dot.state.mn.us/bridge/
2402	10. Structural Steel G. Protection Angles	2471	Structural Metals Inspection Tag and field inspection for damage/defects	None		Structural metals products will be inspected at the plant and will be shipped with a Structural Metals Inspection Tag. An inspection confirmation report will be completed by Structural Metals Inspection staff and sent to the field personnel. Only approved suppliers are allowed to supply Structural Metals products. A list of approved suppliers can be found on the Bridge Office web site: http://www.dot.state.mn.us/bridge/

VII. Metallic Materials and Metal Products (cont.)

Pay Item No.	Kind of Material	Spec. No.	Minimum Required Acceptance Testing (Field Testing Rate)	Minimum Required Sampling Rate for Laboratory Testing	Sample Size	Notes
2564	11. Overhead Sign structures	2564 2471	Structural Metals Inspection Tag and field inspection for damage/defects	None		Structural metals products will be inspected at the plant and will be shipped with a Structural Metals Inspection Tag. An inspection confirmation report will be completed by Structural Metals Inspection staff and sent to the field personnel. Only approved suppliers are allowed to supply Structural Metals products. A list of approved suppliers can be found on the Bridge Office web site: http://www.dot.state.mn.us/bridge/
2545	12. High Mast Lighting Structures	2545 2471	Structural Metals Inspection Tag and field inspection for damage/defects	None		Structural metals products will be inspected at the plant and will be shipped with a Structural Metals Inspection Tag. An inspection confirmation report will be completed by Structural Metals Inspection staff and sent to the field personnel. Only approved suppliers are allowed to supply Structural Metals products. A list of approved suppliers can be found on the Bridge Office web site: http://www.dot.state.mn.us/bridge/
2565	13. Monotube Signal Structures	2565 2471	Structural Metals Inspection Tag and field inspection for damage/defects	None		Structural metals products will be inspected at the plant and will be shipped with a Structural Metals Inspection Tag. An inspection confirmation report will be completed by Structural Metals Inspection staff and sent to the field personnel. Only approved suppliers are allowed to supply Structural Metals products. A list of approved suppliers can be found on the Bridge Office web site: http://www.dot.state.mn.us/bridge/

VIII. Miscellaneous Materials

Pay Item No.	Kind of Material	Spec. No.	Minimum Required Acceptance Testing (Field Testing Rate)	Minimum Required Sampling Rate for Laboratory Testing	Sample Size	Notes
2403 2422 2452 2521 2540 2545 2554 2557 2564	1. Timber, Lumber Piling & Posts	3412 to 3471 & 3491	Visual Inspection			**Form 02415 or 2403** Untreated materials shall be inspected in the field and the results reported on Form 02415 or 2403. Treated materials shall be Certified on the Invoice or Shipping Ticket. Material is inspected and stamped by an Independent Agency as per Specification 3491. Contact Laboratory for additional information.
2402 2405 2557 Many	2. Miscellaneous pieces and Hardware (Galvanized)	3392 3394		3 samples of each item per shipment. Sample critical items only. (Critical items are load bearing, structurally necessary items.)	Three of each type.	**Form 02415 or 2403** Will carry "Inspected" tag if sampled and tested prior to shipment. No sample necessary if "Inspected".
2504	3. Insulation Board	3760	Visual Inspection	None		**Form 02415 or 2403**
2402	4. Laminated Elastomeric Bearing Pads	3741 and Special Provisions	Structural Metals Inspection Tag and field inspection for damage/defects	See Notes		See Project Special Provisions for Sampling, Testing, and Acceptance Requirements.
2402	4. Plain Elastomeric Bearing Pads	3741 and Special Provisions	Structural Metals Inspection Tag and field inspection for damage/defects	See Notes		See Project Special Provisions for Sampling, Testing, and Acceptance Requirements.
2402	4. Cotton Duck Bearing Pads	3741 and Special Provisions	Structural Metals Inspection Tag and field inspection for damage/defects	See Notes		See Project Special Provisions for Sampling, Testing, and Acceptance Requirements.

IX. Geosynthetics, Pipe, Tile, and Precast/Prestressed Concrete

Pay Item No.	Kind of Material	Spec. No.	Minimum Required Acceptance Testing (Field Testing Rate)	Minimum Required Sampling Rate for Laboratory Testing	Sample Size	Notes
2402 2422 2501 2503 2506	1. Corrugated Metal Products A. Culvert Pipe Underdrains Erosion control Structures	3225 thru 3229, 3351 and 3399	Visual Inspection: Check for good construction, workmanship, finish requirements and shipping			**Form 02415 or 2403** Make certain pipe is Certified on Invoice, retain certificate of compliance and certified mill analysis in project file
2501	1. Corrugated Metal Products B. Structural Plate	3231	Visual Inspection: Invoice shall include notation that material described is in accordance with fabricator's Certificate and Guarantee			**Same as 1.A**
2501	1. Corrugated Metal Products C. Aluminum Structural Plate	3233				Retain certificate of compliance and certified mill analysis in project file
2503 2506	2. Clay Pipe	3251	No samples required for less than 100 pieces	1 sample per 200 pieces of each size.	Full Size Pipe	**Form 02415 or 2403**
2501 2503 2506	3. Concrete Pipe A. Reinforced Pipe and Arches, Precast Cattle Pass Units, and Sectional Manhole Units	3236	Field Inspection: Check for damage and defects. Check dimensions as required. Check for producer's "Certified" stamp and signature on the certification document.	1 "companion" cylinder per month per plant during production, or cylinder testing machine, whichever is greater. Call Precast Inspection Engineer at 651-366-5540 for additional information.		**Form 02415 or 2403** For Concrete Pipe Both A & B: Product will be certified by producer, only spot checks are done by plant inspector. Make certain the invoice or certification document is signed and the product has the required markings. Maintain Form 2403 or 02415 in project records, showing source of materials and type and quantity used
2501 2503 2506	3. Concrete Pipe Fine Aggregate	3126		1 quality test per month during production for A and B above.	10 kg. (25 lb.)	
2501 2503 2506	3. Concrete Pipe Coarse Aggregate	3137		1 quality test per month during production for A and B above.	10 kg. (25 b.)	

IX. Geosynthetics, Pipe, Tile, and Precast/Prestressed Concrete (Cont.)

Pay Item No.	Kind of Material	Spec. No.	Minimum Required Acceptance Testing (Field Testing Rate)	Minimum Required Sampling Rate for Laboratory Testing	Sample Size	Notes
2412	4. Precast/Prestressed Concrete Structures A. Reinforced Precast Box Culvert	3238	1 air test per pour (1st load), One set of cylinders per 25 cubic yards, with a minimum of two cylinders per set. Alternate cylinder acceptance systems may be allowed with the approval of the State Materials Engineer.	1 "companion" cylinder per month per plant during production, or cylinder testing machine, whichever is greater. Call Precast Inspection Engineer at 651-366-5540 for additional information.		Precast/prestressed Concrete Structure (beams, posts, etc.) will be inspected and stamped at plant. Field personnel are responsible for checking for plant inspector's stamp, for shipping/handling damage or defects, and dimensions. An inspection report will be completed by plant personnel and sent to the field personnel.
	Fine Aggregate	3126		1 quality test per month during production.	10 kg. (25 lb.)	
	Coarse Aggregate	3137		1 quality test per month during production.	10 kg. (25 lb.)	
2405	4. Precast/Prestressed Concrete Structures B. Precast/Prestressed Concrete Structure (beams, posts, etc.).	2405	1 air test per pour (1st load), One set of cylinders per 25 cubic yards, with a minimum of two cylinders per set, and one set per beam. Alternate cylinder acceptance systems may be allowed with the approval of the State Materials Engineer.	1 "companion" cylinder per month per plant during production, or cylinder testing machine, whichever is greater. Call Precast Inspection Engineer at 651-366-5540 for additional information.		Precast/prestressed Concrete Structure (beams, posts, etc.) will be inspected and stamped at plant. Field personnel are responsible for checking for plant inspector's stamp, for shipping/handling damage or defects, and dimensions. An inspection report will be completed by plant personnel and sent to the field personnel.
	Fine Aggregate	3126	Gradation: 1 per 150 m^3 (200 Cu. yd.) or fraction thereof. 1 per day of production or 3 per week, whichever is less.	1 gradation and 1 quality test per month during production from a split sample. Include producer's gradation results on sample card.	10 kg (25 lb.)	
	Coarse Aggregate	3137	Gradation: 1 per 75 m^3 (100 Cu. yd.) or fraction thereof. 1 per day of production or 3 per week, whichever is less.	1 gradation and 1 quality test per month during production from a split sample. Include producer's gradation results on sample card.	10 kg (25 lb.)	

IX. Geosynthetics, Pipe, Tile, and Precast/Prestressed Concrete (Cont.)

Pay Item No.	Kind of Material	Spec. No.	Minimum Required Acceptance Testing (Field Testing Rate)	Minimum Required Sampling Rate for Laboratory Testing	Sample Size	Notes
2506	5. Manholes and Catch Basins (Construction)	2506 3622	Field Inspection: Check for damage and defects. Check dimensions as required. Check for Producer's "Certified" stamp and signature on the certification document.	1 "companion" cylinder per month per plant during production, or cylinder testing machine, whichever is greater. Call Precast Inspection Engineer at 651-366-5540 for additional information.		**Form 02415 or 2403** Product will be certified by producer or inspected, tested and stamped at source. Only spot checks are done by plant inspector. Make certain the invoice or certification document is signed and the product has the required markings. Maintain Form 2403 or 02415 in project records, showing source of materials and type and quantity used (bricks, blocks, precast, or combination).
2502	6. Drain Tile (Clay or Concrete)	3276	Visual Inspection	2 samples of each size from each source		
2502 2503	7. Thermoplastic (TP) Pipe ABS and PVC	3245	Obtain Certificate of compliance. Check for approved marking printed on pipe. Field Inspect for damage or defects.			**Form 02415 or 2403** See Spec. 3245 for specific AASHTO or ASTM Pipe types are approved under this specification. If perforated, holes should be 5mm - 10 mm (3/16 - 3/8 inch) diameter, two rows for 4", and four rows for 6" diameter; approximately 75 mm (3 inches) on center.
2502	8. Corrugated Polyethylene Pipe – Single wall for edge drains, etc.	3278	Check for markings (AASHTO M 252) Certificate of Compliance. Field Inspect for damage or defects.	No Laboratory tests required		**Form 02415 or 2403**
2503	9. Sewer Joint Sealing Compound	3724		One per shipment	0.5 liter (l pt.)	
2412 2501 2503	10. Preformed Plastic Sealer for Pipe	3726 Type b		One from each source	0.3 m (1 ft.)	
2412 2501 2503	11. Bituminous Mastic Joint Sealer for Pipe	3728	Visual Inspection	Sample, if questionable		

IX. Geosynthetics, Pipe, Tile, and Precast/Prestressed Concrete (Cont.)

Pay Item No.	Kind of Material	Spec. No.	Minimum Required Acceptance Testing (Field Testing Rate)	Minimum Required Sampling Rate for Laboratory Testing	Sample Size	Notes
2105	12. EPS Geofoam	Special Provisions	Visual Inspection Check for yellow aged material, uniformity and dimensions. Weigh 1'x1'x1' cut coupon to verify density every 200 m^3 (250 yd^3)			Form 02415 or 2403
2501 2503	13. Corrugated Polyethylene Pipe – Dual Wall, 12" – 48"	3247				For Specification 3247, Corrugated Polyethylene Pipe (HDPE) manufacturing facilities are required to be reviewed yearly and in compliance with AASHTO's National Transportation Product Evaluation Program (NTPEP) for producers of AASHTO M294 HDPE pipe. To determine if a pipe manufacturing plant is qualified, click on the following link for M294 pipe. http://data.ntpep.org/Module/PIPE/StatusReport.aspx If a plant has a compliant NTPEP audit for AASHTO M294 pipe at the time the pipe is manufactured, then the plant has met requirements. Note that a previous year's audit shall govern until NTPEP issues the next year's audit. A Certificate of Compliance shall be provided in accordance with Specification 1603.

IX. Geosynthetics, Pipe, Tile, and Precast/Prestressed Concrete (Cont.)

Pay Item No.	Kind of Material	Spec. No.	Minimum Required Acceptance Testing (Field Testing Rate)	Minimum Required Sampling Rate for Laboratory Testing	Sample Size	Notes
2105 2411 2412 2501 2502 2511 2512	14. Geotextile Fabric and Geogrid Reinforcement	3733 and Special Provisions	Inspect for damage and uniformity of texture. Rolls of both geotextile and geotextile wrapped PE Tubing must be wrapped in UV protective plastic. (Usually Black). Obtain Certificate of Compliance If using adhesive for seams, see Approved/Qualified Product List available at the Department's website	(a) 1 per project for pipe wrap or trench lining for Permeable base designs. (b) 1 per 50,000 yd^2 (40,000 m^2) or fraction thereof of each type fabric or geogrid for all other uses. (c) Seam, if required, 1 per project minimum, additional as appropriate. **Small Quantity Acceptance** • For fabric totals less than 200 yd^2 (170 m^2) • For pipe wrap totals less than 1000 Lin. Ft • No sampling required • Use Inspection Report for Small Quantities (Form 2403) • Check: o Certificate of Compliance o Identifying label on product o Geotextile Small Quantity Acceptance List at http://www.dot.state.mn.us/materials/aggregatedocs/gtxlist.pdf	(a) 10 Lin. Ft. (3 m) (b) 4 yd^2 (3 m^2)* (c) 10 Lin. Ft. (3 m)**	Certificate of Compliance shall state material identification (e.g. Propex 2002, Miragrid 8XT), and minimum average roll values (MARV) for all specified geotextile properties. MARV values must meet the Specification 3733 Types 1 through 7 requirements for the specific application. Submit copy of Certificate with material samples sent to the Materials Laboratory. Submit additional sample(s), if the manufacturer or model of geotextile or geogrid used changes during construction. Sampling shall be by random selection and no more than one sample shall be taken from an individual roll. For type 6 applications (including geogrids), submit pages of Special Provisions that list required material properties. (Type 6 requirements are job specific.) For Modular Block Walls or Reinforced Soil Slopes, submit page(s) of shop drawings that reference geogrid/geotextile to be used (product name) and/or required properties. * Do not sample first full turn of rolled product. ** Seam sample to include approximately 3 ft. (1 m) of geosynthetic material on each side of seam (in direction perpendicular to seam).

X. Brick, Stone, and Masonry Units

Pay Item No.	Kind of Material	Spec. No.	Minimum Required Acceptance Testing (Field Testing Rate)	Minimum Required Sampling Rate for Laboratory Testing	Sample Size	Notes
2506	1. Brick A. Sewer (clay) and Building	3612 to 3615	Visual Inspection	One sample per 50,000 brick or fraction thereof	6 whole bricks	
2506	1. Brick B. Sewer (Concrete)*	3616	Visual Inspection	One sample per shipment.	6 whole bricks	* Air entrainment required. Obtain air content statement from supplier.
2506	2. Concrete Masonry Units A. For Sewer Construction	3621	Visual Inspection	One sample per shipment	6 whole units	Air entrainment required. Obtain air content statement from supplier.
2411	2. Concrete Masonry Units B. For Modular Block Retaining Walls	Special Provisions	Visual Inspection Check for cracks and broken corners	One sample per 10,000 units or fraction thereof, with a minimum of one sample per product (block) type per contract.*	5 whole units	All lots of block upon delivery shall have Manufacturer or Independent laboratory test results to verify passing both compression and freeze-thaw requirements. * Wall units and cap units are considered separate block types.
2422	3. Reinforced Concrete Cribbing	3661	Concrete control tests Air Tests Visual Inspection if previously tested	One cylinder per 100 units, but not less than 5 cylinders for a given contract. Other materials as required herein.	150 x 300mm (6 x 12 in) Cylinders	Form 02415 or 2403 Will be stamped when inspected prior to shipment.
2511 2512 2577	4. Stone for Masonry or Rip-Rap	3601 and Special Provisions	Visual Inspection Submit Form 02415 unless special testing is specified			Form 02415 or 2403 Each source shall be approved by Project Engineer or Supervisor for quality, prior to use. For questions on quality, contact District Materials or Geology Unit.

XI. Electrical and Signal Equipment Items

Pay Item No.	Kind of Material	Spec. No.	Minimum Required Acceptance Testing (Field Testing Rate)	Minimum Required Sampling Rate for Laboratory Testing	Sample Size	Notes
2545	1. Lighting Standards (Aluminum or Steel)	3811	Visual Inspection			The Fabricator shall submit "Certificate of Compliance", on a per project basis, to the Project Engineer..
2545 2550 2565	2. Hand Holes (Precast, PVC, and LLDPE)	2545 2550 2565				Form 02415 or 2403 Traffic signals and street lighting projects require handholes and frames and covers to be listed on the MnDOT Approved/Qualified Products List (A/QPL) for signal. For cast iron frame and cover: see VII.6, Drainage Castings
2545 2565	3. Foundation	2545	Slump as needed	1 cylinder per 20 m^3 (25 Cu. yd.)		Rebar is required in concrete foundations as specified in the Contract documents for all traffic signal and street lighting projects.
2402 2545 2565	4. Conduit and Fittings A. Metallic	3801 3802	Visual Inspection	None		Form 02415 or 2403 Conduit shall be labeled as being listed by a National Recognized Testing Laboratory (NRTL). Retain Form 02415 or 2403 in Project File
2545 2565	4. Conduit and Fittings B. Non-Metallic (Rigid and HDPE)	3803 Special Provisions	Visual Inspection			Form 02415 or 2403 Conduit shall be labeled as being listed by a National Recognized Testing Laboratory (NRTL). Retain Form 02415 or 2403 in Project File. For traffic signal and street lighting projects, specific requirements are contained in the Special Provisions for each project.
2545 2565	5a. Anchor bolts (cast in place)	2545 2565				See section VII, 7.
2545	5b. Anchorages (Drilled In)	2545				See section VII, 8.

XI. Electrical and Signal Equipment Items (cont.)

Pay Item No.	Kind of Material	Spec. No.	Minimum Required Acceptance Testing (Field Testing Rate)	Minimum Required Sampling Rate for Laboratory Testing	Sample Size	Notes
2545 2565	6. Miscellaneous Hardware	2545 2565	Visual Inspection	Sample critical items only. One of each item per shipment. (Critical Items are load bearing, structurally necessary items.)		Will carry "Inspected" tag if sampled and tested prior to shipment. No sample necessary if "Inspected". Do not use if not tested. Field sample at sampling rate for laboratory testing. For traffic signal and street light lighting projects, various miscellaneous hardware is required to be listed on the MnDOT Signals and Lighting Approved/Qualified Products Lists (A/QPL). The Contract documents indicate which items must be on the Signals and/or Lighting APL.
2545 2550 2565	7. Cable and Conductors A. Power Conductors Loop Detector Conductors (No Tubing) Underground Service Entrance (USE) cables	3815.2B1 3815.2B2(a) Special Provisions	Visual Inspection	None		Form 02415 or 2403 Make certain the conductors are the type specified. Submit Field Inspection report showing type and quantities used. Shall be labeled as being listed by a National Recognized Testing Laboratory (NRTL) and type where applicable.
2545 2550 2565	7. Cable and Conductors B. Electrical Cables and Single Conductors with Jacket	3815.2B2(b) 3815.2B3 3815.2B5 3815.2C1 3815.2C3 3815.2C4 3815.2C5 3815.2C6 3815.2C7 3815.2C8 3815.2C14 Special Provisions	Visual Inspection	1 sample per size per lot	1.5m (5 ft.)	**Form 02415 or 2403** Usually inspected at the distributor. Documentation showing project number, reel number(s), & MnDOT test number(s) will be included with each project shipment. If such documentation is not received from Contractor, submit sample for testing along with material certification from manufacturer. Do not use if not tested. Pre-inspected materials will not be tagged; an inspection report will be sent by the MnDOT inspector for each shipment. Project inspectors should verify that the shipping documents agree with this inspection report. Call Steve Grover at 651-366-5540 or Cindy Schellack at 651-366-5543 with questions. For traffic signal and street lighting projects, the Special Provisions for each project contain electrical cable and conductor specifications.
2545 2550 2565	7. Cable and Conductors C. Fiber Optic Cables	3815.2C13	Visual Inspection - verify make and model number as shown in Special Provisions	None		**Form 02415 or 2403** Fiber optic cables shall be listed on the MnDOT Approved/Qualified Products List (A/QPL) for Traffic Management Systems/ITS.

XI. Electrical and Signal Equipment Items (cont.)

Pay Item No.	Kind of Material	Spec. No.	Minimum Required Acceptance Testing (Field Testing Rate)	Minimum Required Sampling Rate for Laboratory Testing	Sample Size	Notes
2545 2565	8. Ground Rods	2545 2565	Visual Inspection	None.		**Form 02415 or 2403** Retain Form 02415 or 2403 in project file. Shall be labeled as being listed by a National Recognized Testing Laboratory (NRTL).
2545	9. Luminaires and Lamps	3810				**Form 02415 or 2403** Traffic signal and street lighting projects require luminaries and lamps to be listed on the MnDOT Approved/Qualified Products List (A/QPL) for Lighting. The conductors shall be labeled as being listed by a National Recognized Testing Laboratory (NRTL) and type, where applicable.
2545	10. Electrical Systems					Electrical Systems are to be reported as a "System" using the Lighting, Signal, and Traffic Recorder Inspection Report. To be certified by the Project Engineer.
2565	11. Traffic Signal Systems	2565				Traffic Signal Systems are to be reported as a "System" using the Lighting, Signal, and Traffic Recorder Inspection Report. To be certified by the Project Engineer.

Certifications List

Material	SMC Section	Sub Section	Page	Certification Needed
All Base, Surface, and Granular Materials	I. Grading & Base	Many	2-8	Form G&B-104 (24346) include gradation, crushing, bitumen content, and quality test results
Plant Mixed Asphalt (PMA)	II. Bituminous	Many	9-15	All PMA from certified supplier www.dot.state.mn.us/materials/bituminous.html
Shingles	II. Bituminous		10	Contractor shall provide documentation that of all RAS /TOSS (Tear Off Shingle) material is from a MPCA certified supplier.
Bituminous Material	II. Bituminous		14	Only Bituminous Materials from certified asphalt binder sources are allowed for use. The most current list of Certified Sources can at http://www.dot.state.mn.us/products
Emulsified Asphalt	II. Bituminous		14	Use Emulsion for seal coat from a certified emulsified asphalt source.
Portland Cement Fly Ash Ground Granulated Blast Furnace Slag Cement Admixtures	IV. Concrete		22	Concrete Plant Batching Materials: All materials must come from certified approved, or qualified sources. All certified sources must state so on the Bill of Lading Delivery invoice including MnDOT standardized certification statement for cement, flyash, and slag. The most current list of certified/approved sources can be found at www.dot.state.mn.us/products.
Certified Ready Mix	IV. Concrete	Many	23-24	Contact Report from Ready-Mix Plant. All concrete from certified plant including a computerized certificate of compliance with each load.
Plastic for Curing	IV. Concrete		30	A Certificate of Compliance shall be submitted to the Project Engineer from the Manufacturer certifying that the plastic complies with AASHTO M171.
Profiler	IV. Concrete		34	Contractor provides MnDOT certified Inertial Profiler Results for bumps/dips and/or Areas of Localized Roughness for the entire project.
Aggregate for Low Slump Overlays	IV. Concrete		35	Aggregate pit numbers and 1 passing gradation result per fraction per source
Aggregate for Concrete Pavement Repair	IV. Concrete		36	Aggregate pit numbers and 1 passing gradation result per fraction per source
Aggregate for Dowel Bar Retrofits	IV. Concrete		38	Aggregate pit numbers and 1 passing gradation result per fraction per source

Certifications List (cont.)

Material	SMC Section	Sub Section	Page	Certification Needed
Plant Stock & Landscape Materials	V: Landscaping etc.	2	39	Several certifications
Silt Fence	V: Landscaping etc.	5	40	Certificate of Compliance with MARV values
Flotation Silt Curtain	V: Landscaping etc.	6	40	Manufacturers' certification of compliance
Mulch Type 3	V: Landscaping etc.	12	40	Certified Vendor by Minnesota Crop Improvement Association must be tagged grain straw only on label.
Mulch Type 6 Wood Chips	V: Landscaping etc.	13	41	Emerald Ash Borer Compliance Agreement with the MDA
Seeds	V: Landscaping etc.	14	41	Certified Vendor by Minnesota Crop Improvement Association must be tagged.
Seeds - Native	V: Landscaping etc.	14	41	Certified Vendor by Minnesota Crop Improvement Association must be tagged.
Sod	V: Landscaping etc.	15	41	A certified tag by Minnesota Crop Improvement Association for Salt tolerant sod. A certificate of Compliance for all other types of sod listing grass varieties.
Compost	V: Landscaping etc.	16	41	A/QPL with certified test reports.
Waterproofing material membrane waterproof system	VI: Chemical Items		42	Certificate and test results
Waterborne latex traffic marking paint	VI: Chemical Items		43	Certificate of Compliance
Epoxy traffic paint	VI: Chemical Items		43	Certificate of Compliance
Traffic marking paint	VI: Chemical Items		43	Certificate of Compliance
Non-traffic marking paint	VI: Chemical Items		43	Certificate of Compliance
Bridge structural steel paint	VI: Chemical Items		44	Certificate of Compliance
Exterior masonry paint	VI: Chemical Items		44	Certificate of Compliance
Noise wall stain	VI: Chemical Items		44	Certificate of Compliance
Drop-on glass beads	VI: Chemical Items		44	Certificate of Compliance
Pavement marking tape	VI: Chemical Items		44	Certificate of Compliance
Steel sign posts	VII: Metallic	2	46	Certification of domestic source if applicable under 1601
Posts for traffic or fence	VII: Metallic	3A	46	Certification of domestic source if applicable under 1601 For fence: Fence certification form (Optional)
Fence components	VII: Metallic	3B	46	Fence certification form (Optional)
Fence gates	VII: Metallic	3C	46	Fence certification form (Optional)
Fence barbed wire fabric	VII: Metallic	3D	46	Fence certification form (Optional)
Fence woven wire fabric	VII: Metallic	3E	47	Fence certification form (Optional)
Fence chain link wire fabric	VII: Metallic	3F	47	Fence certification form (Optional)
Reinforcing steel uncoated bars	VII: Metallic	5A	47	Certificate of Compliance & certified mill analysis
Reinforcing steel epoxy bars	VII: Metallic	5B	48	Inspected tag or Certificate of Compliance & certified mill analysis
Steel Fabric	VII: Metallic	5E	48	Certificate of Compliance
Dowel Bars	VII: Metallic	5F	48	Certificate of Compliance
Pre or post tensioning strand	VII: Metallic	5G	49	Mill analysis
Anchor rods & Structural Fasteners	VII: Metallic	7, 8	49	Yearly MnDOT passing test report

Certifications List (cont.)

Material	SMC Section	Sub Section	Page	Certification Needed
Timber & lumber	VIII: Miscellaneous	1	53	Certified on invoice
Bearing pads	VIII: Miscellaneous	4	53	Certificate of Compliance
Corrugated metal pipe	IX: Geosynthetics & Pipe	1A	54	Certified on invoice
Corrugated metal structural plate	IX: Geosynthetics & Pipe	1B	54	Certified on invoice
Corrugated metal aluminum plate	IX: Geosynthetics & Pipe	1C	54	Fabricator's Certificate and guarantee
Concrete pipe	IX: Geosynthetics & Pipe	3A	54	Certified stamp and certification document
Precast box culverts	IX: Geosynthetics & Pipe	4A	55	Stamped & field inspection report
Prestressed beams & posts, etc.	IX: Geosynthetics & Pipe	4B	55	Stamped & field inspection report
Manholes & catch basins	IX: Geosynthetics & Pipe	5	56	Certification document or stamped
Thermoplastic pipe ABS & PVC	IX: Geosynthetics & Pipe	7	56	Certificate of Compliance
Corrugated PE Pipe: Single wall – edge drains	IX: Geosynthetics & Pipe	8	56	Certificate of Compliance
Corrugated PE Pipe: dual wall – 12"-48"	IX: Geosynthetics & Pipe	13	57	Certificate of Compliance
Geotextile fabric	IX: Geosynthetics & Pipe	14	58	Manufacturers' Certification of compliance
Brick sewer concrete	X: Brick, Stone, Masonry	1B	59	Air content statement
Concrete masonry units	X: Brick, Stone, Masonry	2A	59	Air content statement
Light standards	XI: Electrical & Signal	1	60	Certificate of Compliance
Cable & Conductors	XI: Electrical & Signal	7	61	Usually inspected at the distributor. Documentation showing project number, reel number(s), & MnDOT test number(s) will be included with each project shipment. If not received from Contractor, submit sample for testing along with manufacturers' material certification.
Electrical systems	XI: Electrical & Signal	10	62	Electrical Systems are to be reported as a "System" using the Lighting, Signal, and Traffic Recorder Inspection Report.
Traffic signal systems	XI: Electrical & Signal	11	62	Traffic Signal Systems are to be reported as a "System" using the Lighting, Signal, and Traffic Recorder Inspection Report.

Telephone Index for Schedule of Materials Control

Section	Page	Section Name	Contact	Phone
Part I	Page 1	Grading & Base – Specifications 2105, 2106, 2118, 2211, 2212, 2215, and 2221	Terry Beaudry John Bormann Melissa Cole	(651) 366-5456 (651) 366-5496 (651) 366-5432
Website: www.dot.state.mn.us/materials/gradingandbase.html				
Part II Part II C	Page 9 Page 14	Bituminous - Spec. 2360 Asphalt Binder	John Garrity Jim McGraw Jason Szondy	(651) 366-5577 (651) 366-5548 (651) 366-5549
Website: www.dot.state.mn.us/materials/bituminous.html				
Part III	Page 16	Bituminous Specialty Items	Terry Beaudry Greg Schneider Melissa Cole Tom Wood	(651) 366-5456 (651) 366-5403 (651) 366-5432 (651) 366-5573
Part IV	Page 21	Concrete – Aggregates and Mix Design Concrete – Certified Ready Mix Concrete Concrete – Paving Concrete – Bridges Concrete – Pavement Rehabilitation	Wendy Garr Wendy Garr Rob Golish Ron Mulvaney Gordy Bruhn	(651) 366-5423 (651) 366-5423 (651) 366-5576 (651) 366-5575 (651) 366-5523
Website: www.dot.state.mn.us/materials/concrete.html				
Part V	Page 39	Landscaping and Erosion Control Items Erosion Control Landscaping Wood Chips	 Lori Belz Scott Bradley Tina Markeson	 (651) 366-3607 (651) 366-4612 (651) 366-3619
Part VI	Page 42	Chemical Items	Jim McGraw Dave Iverson	(651) 366-5548 (651) 366-5550
Part VII	Page 45	Metallic Materials and Metal Products Sampling Test Results Bridge Structural Metals	 Steve Grover Laboratory Todd Niemann Barry Glassman	 (651) 366-5540 (651) 366-5560 (651) 366-4567 (651) 366-4568
Part VIII	Page 53	Miscellaneous Materials Sections 1thru 3 Section 4 Test Results	 Steve Grover Todd Niemann Barry Glassman Laboratory	 (651) 366-5540 (651) 366-4567 (651) 366-4568 (651) 366-5560
Part IX	Page 54	Geosynthetics, Pipe, Tile, and Precast/Prestressed Concrete Sections 1 thru 11, & 13 Section 12 Section 14 Test Results	 Steve Grover Rich Lamb Randy Tilseth Laboratory	 (651) 366-5540 (651) 366-5595 (651) 366-5451 (651) 366-5560
Part X	Page 59	Brick, Stone and Masonry Units/Modular Retaining Wall Blocks Sections 1, 2A,3, & 4 Section 2B Test Results	 Steve Grover Blake Nelson Laboratory	 (651) 366-5540 (651) 366-5599 (651) 366-5561
Part XI	Page 60	Electrical & Signal Sections 1, 8-11 Section 2, 4- 7 Section 3 Test Results	 Susan Zarling Steve Grover Wendy Garr Laboratory	 (651) 234-7052 (651) 366-5540 (651) 366-5423 (651) 366-5560

Form Index

Grading and Base	
Form No.	**Form Name**
G&B – 001	Grading & Base Report
G&B – 002	Random Sampling Acceptance
G&B – 101	Sieve Analysis
G&B – 103	Percent Crushing Report
G&B – 104	Certificate of Aggregates & Granular Materials
G&B – 105	Moisture Test
G&B – 203	(Table 2105-6, 2106-6) DCP Penetration Index Method
G&B – 204	(Table 2211-3) DCP Penetration Index Method
G&B – 205	2215 DCP Penetration Index Form – Full Depth Reclamation
G&B – 303	Moisture - Density (Proctor) Test
G&B – 304	Relative Density Test
G&B – 305	Estimated 0ptimum Moisture Content
G&B – 401	Depth Report – FDR, CIR, SFDR
Concrete	
Form No.	**Form Name**
2152	Concrete Batching Report
2162	Concrete Test Beam Data
2409	ID Card Concrete Test Cylinder
2448	Weekly Concrete Report
2449	Weekly Concrete Aggregate Report (QC/QA)
21412	Weekly Report of "Low Slump Concrete"
21763	Concrete Aggregate Worksheet
21764	Concrete Aggregate Worksheet JMF - Paving
21765	Concrete Aggregate Worksheet JMF
24143	Weekly Certified Ready-Mix Plant Report (Verification)
24300	ID Card Cement Samples
24308	ID Card Fly Ash Samples
24327	Field Core Report
	Concrete W/C Ratio Calculation Worksheet
	Incentive/Disincentive Smoothness Worksheet
Bituminous	
Form No.	**Form Name**
2413	Asphalt Sample Identification Card
Miscellaneous	
Form No.	**Form Name**
2410	Sample ID Card
02415	Inspection Report on …….. (May be used for documentation or use another method to capture required documentation)
2403	Inspection Report for Small Quantities (May be used for documentation or use another method to capture required documentation)
	Certification Form for Type of Fence used (right side of page at website location below) www.dot.state.mn.us/materials/lab.html

Targeted Group Business (TGB) and Veteran-Owned Small Business Special Provisions

Purpose

The MnDOT Targeted Group Business (TGB) and Veteran-owned Small Business programs are part of the MnDOT initiative to increase small business participation on state funded projects. These programs are intended to provide eligible businesses with increased access to state contracting opportunities. Eligibility requirements for both programs are established pursuant to Minn. Stat. §16C.16 and Minn. Rule Parts 1230.1600-1820. TGBs and Veteran-owned Small businesses bidding as prime contractors may receive a preference in the bid amount, and contracts may include goals to increase participation of TGBs and Veteran-owned small businesses as subcontractors.

1. AUTHORITY

The Targeted Group Business and Veteran-owned Small Business programs are authorized in Minn. Stat. §161.321 as amended:

1.1 MnDOT may award a preference in the amount bid for this contract to targeted group and Veteran-owned small businesses; and

1.2 MnDOT may set a goal for the use of targeted group and Veteran-owned small businesses as sub-contractors on this contract.

2. ELIGIBILITY

Eligibility for TGB

2.1 Rules regarding eligibility and the designation of targeted group businesses are established by the Commissioner of the Minnesota Department of Administration and can be found at Minn. Rule Parts 1230.1600-1820. To participate in the MnDOT TGB program, a business must be certified at the time the bid is submitted. Information about the eligibility criteria and the process for obtaining TGB certification can be found on the Department of Administration's website at: http://www.mmd.admin.state.mn.us/mn02001.htm

2.2 A certified business is eligible for the MnDOT TGB program if it belongs to a group that is designated as a targeted group business in the specified contracting category. The business must be 51% owned and operated by women, persons with a substantial physical disability, or specific minorities as determined by the Commissioner of Administration (Minn. Stat. §16C.16 Subd. 5). The following table shows the targeted groups for highway construction contracts:

TABLE OF GROUPS EXPERIENCING DISPARITY IN MINNESOTA DEPARTMENT OF TRANSPORTATION NON-FEDERAL HIGHWAY CONSTRUCTION CONTRACTING & SUBCONTRACTING

(Based on the 2009 Disparity Study)

GROUP	PRIME CONTRACTS	SUBCONTRACTS
African American	X	X
American Indian	X	X
Asian American	X	X
Hispanic American	X	X
Nonminority Women	X	X
Disabled*	X	X

Source: http://www.mmd.admin.state.mn.us/disparity/orders/orderMnDOT.pdf
Groups eligible as Targeted Group Businesses are marked with an X. "Disabled" means persons with a substantial physical disability as used in Minn. Stat. §16C.16 Subd. 5(a).

2.3 Contract qualifications and other contract requirements still apply.

Eligibility for Veteran-owned Small Businesses

2.4 The Veteran-owned small business (Veteran) program requirements are defined in Minn. Stat. §16C.16 Subd.6a. The business must be a certified small business that is 51% owned and operated by:

2.4.1 Recently separated veterans, who are veterans as defined in Minnesota Statutes §197.447, who have served in active military service, at any time on or after September 11, 2001, and who have been discharged under honorable conditions from active service, as indicated by the person's United States Department of Defense form DD-214 or by the Commissioner of Veterans Affairs; or

2.4.2 Veterans with service-connected disabilities, as determined at any time by the United States Department of Veterans Affairs (VA); or

2.4.3 Any other veteran-owned small business verified by the VA as such. Verified veteran-owned small businesses may be listed in the Vendor Information Pages database at www.vetbiz.gov.; or it may provide a copy of the VA issued notice of verification showing that the business is approved as a veteran-owned small business; the letter must be issued within the 24 month period prior to the bid proposal due date.

2.5 Contract qualifications and other contract requirements still apply. MnDOT may request the Veteran business submit information demonstrating it meets the requirements of ownership and control, small business definitions, or other eligibility criteria.

3. PREFERENCE IN BIDDING

3.1 TGB and Veteran businesses will receive a preference of up to 6% of the amount of its bid, not to exceed $60,000.00. The preference will be applied only for the purpose of evaluating bids, and will not be used to determine the contract award amount or payment due to the contractor under the contract. Eligible bidders must complete the Preference Form included herein.

3.2 **A bidder requesting the preference must submit the Preference Form according to the following:**

The Preference Form must be sent via E-mail to biddocsubmittal.dot@state.mn.us; place the State Project number in the subject line. The form must be received by MnDOT no later than the date and time of the bid letting.

4. SUBCONTRACTOR GOALS

4.1 If the bidder is an eligible TGB or Veteran business, that portion of the work to be self-performed by the bidder will count towards the subcontractor goals for this contract.

4.2 If the bidder is not an eligible TGB or Veteran business, the bidder must make a good faith effort to obtain the participation of TGB and Veteran subcontractors and/or suppliers as a condition of awarding the contract. MnDOT has established the following goals for subcontractors and/or suppliers:

Veteran goal 0.0% TGB goal 2.7%

4.3 Only the participation of businesses deemed eligible by the Minnesota Department of Administration under Minn. Stat. §16C.16 or Minn. Rule Parts 1230.1600-1820 will count towards the TGB or Veteran business goals.

5. METHODS TO ATTAIN THE SUBCONTRACTOR GOALS

5.1 The goal may be attained by:

5.1.1 Subcontracting with a TGB and Veteran businesses deemed eligible by the Minnesota Department of Administration under Minn. Stat. §16C.16 or Minn. Rule Parts 1230.1600-1820 To prove the existence of such a subcontract, the Apparent Low Bidder (ALB) must submit a signed agreement or a signed affidavit committing it to enter into such a subcontract;

5.1.2 Leasing equipment from eligible TGB and Veteran businesses;

5.1.3 Entering into a joint venture with eligible TGB and Veteran businesses. This joint venture must be approved in writing by the MnDOT Office of Civil Rights prior to bid opening;

5.1.4 Purchasing materials and supplies from eligible TGB and Veteran businesses. Generally, sixty percent (60%) of the supplier's contracted amount will be credited toward the TGB and Veteran business goals;

5.1.5 Using other services as approved in writing by the MnDOT Office of Civil Rights prior to bid opening.

6. SOLICITING TGB AND VETERAN BUSINESSES

6.1 **All bidders should make every reasonable effort to subcontract work to TGB and Veteran businesses through good faith negotiations and solicitations in advance of the dates specified for submitting and opening of bids.**

6.2 In order to fulfill a TGB and Veteran business goal, the firms utilized as TGB and Veteran business subcontractors or suppliers must be deemed eligible by the Minnesota Department of Administration under Minn. Stat. §16C.16 or Minn. Rule Parts 1230.1600-1820 **prior to the date of the bid opening**. The TGB and Veteran business directories, which are accessible **"through"** or **"linked from"** MnDOT's Office of Civil Rights' website, includes the names, addresses and contact information of all eligible TGB and Veteran business firms. MnDOT makes no representation as to any TGB or Veteran business's technical or financial ability to perform the work. Prime contractors are solely responsible for performing due diligence in hiring TGB and Veteran business subcontractors. A TGB or Veteran business subcontractor's failure to perform the work will not be considered justification for a compensation increase.

7. IDENTIFYING TGB AND VETERAN BUSINESS COMMITMENT RATES

7.1 All bidders must identify the percentage of TGB and Veteran business participation the bidder proposes to utilize on the project at the time of bid. This proposed commitment rate may be used in evaluating good faith efforts in comparison to the performance of other bidders in meeting the TGB and Veteran business goals.

8. APPARENT LOW BIDDER (ALB) SUBMITTAL OF INFORMATION

8.1 The ALB must identify the efforts it made to meet both the TGB and Veteran business subcontractor goals. The ALB must submit the information described in this section to the MnDOT Office of Civil Rights (OCR). All bidders are required to thoroughly document these solicitation efforts. The ALB shall justify any bids, quotes, or proposals it rejects from eligible, qualified TGB and Veteran businesses.

8.2 **THE INFORMATION IN SECTIONS 8.3 THROUGH 8.6 MUST BE SUBMITTED BEFORE OR ON THE SUBMISSION DUE DATE. The Submission Due Date is the fifth business day after the bid letting date, unless the MnDOT Director of the Office of Civil Rights grants a written extension for good cause shown. The five day period starts the business day following the bid letting date. Information sent by fax or personal delivery must be received by the MnDOT Office of Civil Rights no later than 4:30PM central time on the Submission Due Date. Information sent by U.S. mail must be postmarked no later than the Submission Due Date. FAILURE TO SUBMIT ALL**

REQUIRED INFORMATION BY THE SUBMISSION DUE DATE WILL RESULT IN REJECTION OF YOUR BID ON THE BASIS THAT YOU ARE NOT A RESPONSIBLE BIDDER. PARTIAL SUBMISSIONS WILL NOT BE CONSIDERED.

8.3 The ALB must either (1) identify TGB and Veteran business participation sufficient to meet both the TGB and Veteran business goals; or (2) request a waiver of either, or both, of the goal(s) and demonstrate that the ALB made adequate good faith efforts to meet both the TGB and Veteran business goals. The ALB must submit the following documents to the MnDOT Office of Civil Rights:

8.4 If the bidder meets the established goals for both the TGB and Veteran business programs, it must complete and submit only the following forms by the submission due date:

- Bidders List
- Exhibit A Form for each TGB and Veteran business the bidder intends to use

8.5 If the bidder does not meet the TGB goal, Veteran business goal, or both, it must apply for a waiver from the goal requirement. The bidder must provide information showing that eligible TGB and Veteran businesses are not reasonably available. Failure to request a waiver by the submission due date will result in rejection of your bid on the basis that you are not a responsible bidder. To request a waiver, 1) the bidder must complete and submit the Waiver Form in addition to the Bidders List form and an Exhibit A form for each TGB and Veteran business the bidder intends to use 2) the bidder must complete and submit the good faith efforts documents as instructed.

8.6 To submit a waiver request, the bidder must complete and submit the following good faith efforts documents by the submission due date:

- Waiver Form
- Bidders List
- Exhibit A form for each TGB and Veteran business the bidder intends to use
- Certificate of Good Faith Efforts
- Any additional information the bidder provides to demonstrate its good faith efforts

Note: Waiver Form and Certificate of Good Faith Efforts must be completed only if the ALB did not obtain sufficient TGB and/or Veteran business participation to meet both the TGB and Veteran business goals.

8.7 The ALB must submit the form **TGB and Veteran Business Description of Work and Field Monitoring Report** (**Exhibit A)**. A separate form must be submitted for each TGB and Veteran business the ALB proposes to utilize on the project. This must *be accompanied by proof of commitment to use the TGB and Veteran business*, such as copies of signed agreements, affidavits, or letters of intent. These commitments will be used to determine the "commitment rate" (the percentage of TGB and Veteran business participation). The ALB must commit to using the proposed TGB and Veteran businesses

for not less than the percentage of the TGB and Veteran business participation shown on the TGB and Veteran business Description of Work and Field Monitoring Report (Exhibit A). An ALB will be deemed a non-responsible bidder if it fails to include in its submission a completed TGB and Veteran business Description of Work and Field Monitoring Report (Exhibit A) for each TGB and Veteran business along with the required signed agreements or affidavits.

8.8 The ALB must submit information that demonstrates its adequate good faith efforts to achieve the TGB and Veteran business goal. This information can include, but is not limited to, copies of solicitation letters, faxes, and emails to TGB and Veteran business firms. The ALB must identify the actions it took to achieve the TGB and Veteran business goals.

9. FAILURE TO SUBMIT INFORMATION

9.1 If the ALB fails to submit the information required by the previous section, the ALB is a non-responsible bidder and MnDOT will reject the ALB's bid. **All required information must be submitted by the Submission Due Date.** The information submitted must state the ALB's commitment to use TGB and Veteran businesses for not less than the commitment rate.

10. IF BOTH TGB AND VETERAN GOALS ARE NOT MET, A GOOD FAITH EFFORTS REVIEW WILL BE CONDUCTED

10.1 An ALB that does not commit to meeting both the TGB and Veteran business goals is thereby not disqualified if the ALB demonstrates that it made adequate good faith efforts (GFE) to meet the TGB and Veteran Business goals. An ALB that does not commit to meet both the TGB and Veteran business goals and fails to show that adequate GFE were made is a non-responsible bidder and MnDOT will reject its bid.

10.2 A TGB or Veteran business that bids as a prime contractor will be deemed to have met either the TGB or Veteran business goal if the value of the work performed by its own forces, combined with any work that it has committed to be performed by TGB and Veteran business subcontractors and TGB and Veteran business suppliers, meets or exceeds the TGB and Veteran business subcontractor goals.

11. EVALUATION OF GOOD FAITH EFFORTS

11.1 If an ALB has a TGB and/or Veteran business commitment rate that is less than either or both the TGB and Veteran business goals, then the ALB must demonstrate that it made adequate good faith efforts in attempting to meet the TGB and/or Veteran business goals that failed to meet. MnDOT's Office of Civil Rights staff will review the GFE documents submitted by the ALB and the TGB and Veteran business commitment submitted by each bidder to evaluate the ALB's commitment rate.

11.2 In the bidder's request for a waiver from the TGB and/or Veteran business participation goal(s), then the bidder must demonstrate that it made adequate good faith efforts in

attempting to meet the goal. MnDOT's Office of Civil Rights staff will review the good faith effort documents submitted by the bidder and make a fair and reasonable judgment whether a bidder that did not meet the goal made adequate good faith efforts. MnDOT will consider the quality, quantity, and intensity of the different kinds of efforts that the bidder has made. The efforts employed by the bidder should be those that one could reasonably expect a bidder to take if the bidder were actively and aggressively trying to obtain TGB and Veteran business participation sufficient to meet the contract goals. Mere pro forma efforts are not good faith efforts to meet these contract requirements. The ALB must show that it took all necessary and reasonable steps to achieve the TGB and Veteran business goals which, by their scope, intensity, and appropriateness to the objective, could reasonably be expected to obtain sufficient participation, even if they were not fully successful. In evaluating the bidder's adequate good faith efforts, MnDOT will consider the following list of actions. This is not a mandatory checklist, nor is it intended to be exclusive or exhaustive. Other factors or types of efforts may be relevant in appropriate cases. Compliance with the adequate good faith efforts requirement will be determined on a case-by-case basis.

11.2.1 Solicitation

Soliciting through all reasonable and available means (e.g. attendance at pre-bid meetings, advertising and /or written notices) the interest of eligible TGBs and Veteran businesses that have the capability to perform the work of the contract. The bidder must solicit this interest within sufficient time to allow the TGBs and Veteran businesses to respond to the solicitation. The bidder must determine with certainty if the TGBs and Veteran businesses are interested by taking appropriate steps to follow up initial solicitations.

11.2.2 Selection of Work

Selecting portions of the work to be performed by TGBs and Veteran businesses in order to increase the likelihood that the project goals will be achieved. This includes, where appropriate, breaking out contract work items into economically feasible units to facilitate TGB and Veteran business participation, even when the prime contractor might otherwise perform these work items with its own forces.

11.2.3 Providing Information and Assistance

Providing interested TGBs and Veteran businesses with adequate information about the plans, specifications, and requirements of the contract in a timely manner to assist them in responding to a solicitation.

11.2.4 Negotiation

Negotiating in good faith with interested TGBs and Veteran businesses. It is the bidder's responsibility to make a portion of the work available to TGB and Veteran business subcontractors and suppliers and to select those portions of the work or material needs consistent with the available TGB and Veteran business subcontractors and suppliers, so as to facilitate TGB and Veteran business participation. Evidence of such negotiation includes the names, addresses, and telephone numbers of TGBs and Veteran businesses that were considered; a

description of the information provided regarding the plans and specifications for the work selected for subcontracting; and evidence as to why additional agreements could not be reached for TGB and Veteran businesses to perform the work. A bidder using good business judgment would consider a number of factors in negotiating with subcontractors, including TGB and Veteran business subcontractors, and would take a firm's price and capabilities as well as contract goals into consideration. However, the fact that there may be some additional costs involved in finding and using TGBs and Veteran businesses is not in itself sufficient reason for the bidder's failure to meet the contract TGB or Veteran business goal, as long as such costs are reasonable. Also the ability or desire of a prime contractor to perform the work of a contract with its own organization does not relieve the bidder of the responsibility to make good faith efforts. Prime contractors are not, however, required to accept higher quotes from TGB and Veteran businesses if the price difference is excessive or unreasonable.

11.2.5 Rejection of TGBs or Veteran businesses
Not rejecting TGB or Veteran businesses as being unqualified without sound reasons based on a thorough investigation of their capabilities. The bidder's standing within its industry, membership in specific groups, organizations, or associates and political or social affiliations (for example, union vs. non-union employee status) are not legitimate causes for the rejection or non-solicitation of bids in the bidder's efforts to meet the project goal(s).

11.2.6 Financial Assistance
Making efforts to assist interested TGB and Veteran businesses in obtaining bonding, lines of credit, or insurance as required by the recipient or bidder.

11.2.7 Equipment Assistance
Making efforts to assist interested TGB and Veteran businesses in obtaining necessary equipment, supplies, materials, or related assistance or services.

11.2.8 Recruitment
Effectively using the services of available community organizations; contractors' groups; State and local business assistance offices; and other organizations as allowed on a case-by-case basis to provide assistance in the recruitment and placement of TGBs and Veteran-businesses.

11.2.9 Any other evidence that the bidder submits which shows that the bidder has made reasonable good faith efforts to meet the TGB or Veteran-business goals.

11.2.10 In addition, MnDOT may also take into account the following:

a. Whether the bidder's documentation reflects a clear and realistic plan for achieving the TGB or Veteran business goals.

b. The performance of other bidders in meeting the TGB and Veteran business goals. For example, when the apparent successful bidder fails to meet the goals, but others meet it, you may reasonably raise the question of whether, with additional reasonable efforts the apparent successful bidder could have met the goals. If the apparent successful bidder fails to meet the TGB or Veteran business goals, but meets or exceeds the average TGB or Veteran business participation obtained by other bidders, MnDOT may view this in conjunction with other factors, as evidence of the apparent successful bidder having made a good faith effort.

12. Administrative Reconsideration

12.1 If OCR determines that the apparent low bidder (ALB) failed to make adequate good faith efforts and therefore, does not grant a waiver, the ALB may request administrative reconsideration. If the ALB does not make a timely written request for administrative reconsideration as described herein, the ALB will be deemed to have waived its right to request administrative reconsideration.

12.2 The ALB's request for administrative reconsideration must be made in writing. Requests sent by fax or personal delivery must be received by the MnDOT Office of Civil Rights no later than 4:30 PM on the fifth business day after the ALB receives written notice of the determination. Administrative reconsideration requests sent by U.S. mail must be postmarked no later than the fifth business day after the ALB receives notice of the determination. The ALB is deemed to have notice as of the date indicated on the certified mail receipt signed by the ALB, or its representative, at the time of delivery. The ALB must submit the written request for reconsideration to the attention of **MnDOT Deputy Commissioner at MnDOT, 395 John Ireland Blvd. St. Paul, Minnesota 55155; or by fax 651-366-4795. A copy of the request must be sent to the Director of the Office of Civil Rights at the same address or fax 651-366-3129.**

12.3 The Commissioner of MnDOT will designate officials to serve as Reconsideration Officials. The Reconsideration Officials shall not have any role in the original determination that the ALB failed to meet the TGB or Veteran business subcontractor goal or failed to make adequate good faith efforts to do so.

In the reconsideration process, the ALB will have the opportunity to:

- Provide written documentation or argument concerning the issue of whether the ALB met the goal or made adequate good faith efforts to do so.

- Meet in person with the Reconsideration Officials to discuss the issue of whether the ALB met the goal or made adequate good faith efforts to do so.

12.4 The Reconsideration Officials will reconsider the record documenting the good faith efforts of the ALB. The reconsideration process will include the documents and

arguments that the ALB is permitted to submit. The reconsideration process is a review of only the good faith efforts made by the ALB as of the Submission Due Date. Good faith efforts made subsequent to that date will not be considered.

12.5 MnDOT will provide the ALB with a written decision on reconsideration, explaining the basis for the determination **within 5 business days following the date scheduled for the ALB to meet with the Reconsideration Officials to discuss the issue.**

13. Counting TGB and Veteran Participation; Commercially Useful Function

13.1 In accordance with Minn. Rule Part 1230.1820, MnDOT will determine the percentage of TGB and Veteran participation that will count toward TGB and Veteran goals as follows:

13.1.1 Credit toward the goal established for the contract will be at 100 percent for subcontractors who provide labor, materials, and supplies and at 60 percent for subcontractors who provide supplies and materials only.

13.2 When a TGB or Veteran subcontractor participates in a contract, MnDOT will only count the value of the work actually performed by the TGB or Veteran toward TGB or Veteran subcontractor goals. This includes the following:

13.2.1 The entire amount of the portion of this MnDOT construction contract that is performed by the TGB or Veteran subcontractor's own forces. Include the cost of supplies and materials obtained by the TGB or Veteran subcontractor for the work of the contract, including supplies purchased or equipment leased by the TGB or Veteran subcontractor (except supplies, and equipment the TGB or Veteran subcontractor purchases or leases from the prime contractor or its affiliate).

13.2.2 The entire amount of fees or commissions charged by a TGB or Veteran subcontractor firm for providing a bona fide service, such as professional, technical, consultant, or managerial services, or for providing bonds or insurance specifically required for the performance of a MnDOT contract, counts toward TGB or Veteran subcontractor goals, provided that MnDOT determines the fee to be reasonable and not excessive as compared with fees customarily allowed for similar services.

13.2.3 When a TGB or Veteran subcontractor subcontracts part of the work of its contract to another firm, the value of the subcontract work may be counted toward TGB or Veteran goals only if the TGB or Veteran subcontractor is itself a TGB or Veteran business. Work that a TGB or Veteran subcontractor subcontracts to a non-TGB or non-Veteran firm will not count toward TGB or Veteran goals.

13.3 When a TGB or Veteran subcontractor performs as a participant in a joint venture, MnDOT will count a portion of the total dollar value of the contract equal to the distinct, clearly defined portion of the work of the contract that the TGB or Veteran subcontractor performs with its own forces toward TGB or Veteran goals.

13.4 MnDOT will count expenditures of a TGB or Veteran subcontractor contractor toward TGB or Veteran subcontractor goals only if the TGB or Veteran subcontractor is performing a commercially useful function on that contract.

13.4.1 A TGB or Veteran subcontractor performs a commercially useful function when it is responsible for execution of the work of the contract and is carrying out its responsibilities by actually performing, managing, and supervising the work involved. To perform a commercially useful function, the TGB or Veteran subcontractor must also be responsible, with respect to materials and supplies used on the Contract, for negotiating price, determining quality and quantity, ordering the materials, and installing (where applicable) and paying for the material itself. To determine whether a TGB or Veteran subcontractor is performing a commercially useful function, MnDOT will evaluate the amount of work subcontracted, industry practices, whether the amount the firm is to be paid under the Contract is commensurate with the work it is actually performing and TGB or Veteran credit claimed for its performance of the work, and other relevant factors.

13.4.2 A TGB or Veteran subcontractor does not perform a commercially useful function if its role is limited to that of an extra participant in a transaction, contract, or project through which the funds are passed in order to obtain the appearance of TGB or Veteran subcontractor participation. In determining whether a TGB or Veteran subcontractor is such an extra participant, MnDOT may examine similar transactions, particularly those in which TGB or Veteran subcontractors do not participate.

13.4.3 At least 75 percent of the subcontracts awarded to a TGB or Veteran must be performed by the business to which the subcontract is awarded or another TGB or Veteran business respectively. If a TGB or Veteran subcontractor does not perform or exercise responsibility for at least 75 percent of the total cost of its contract with its own work force, or the TGB or Veteran subcontractor subcontracts a greater portion of the work of a contract than would be expected on the basis of normal industry practice for the type of work involved, MnDOT may presume that it is not performing a commercially useful function.

13.4.4 When a TGB or Veteran subcontractor is presumed not to be performing a commercially useful function as provided in the preceding paragraph, the TGB or Veteran subcontractor may present evidence to rebut this presumption. MnDOT may determine that the firm is performing a commercially useful function given the type of work involved and normal industry practices.

13.5 MnDOT will use the following factors in determining whether a TGB or Veteran trucking company is performing a commercially useful function:

13.5.1 The TGB or Veteran subcontractor must be responsible for the management and supervision of the entire trucking operation for which it is responsible on a particular contract, and there cannot be a contrived arrangement for the purpose of the meeting TGB or Veteran goals.

13.5.2 The TGB or Veteran subcontractor must itself own and operate at least one fully licensed, insured, and operational truck used on the contract.

13.5.3 The TGB or Veteran subcontractor receives credit for the total value of the transportation services it provides on the contract using trucks it owns, insures and operates using drivers it employs.

13.5.4 The TGB or Veteran subcontractor may lease trucks from another TGB or Veteran subcontractor firm, including an owner-operator that is an eligible TGB or Veteran subcontractor. The TGB or Veteran subcontractor who leases trucks from another TGB or Veteran subcontractor receives credit for the total value of the transportation services the lessee TGB or Veteran subcontractor provides on the contract.

13.5.5 The TGB or Veteran subcontractor may also lease trucks from a non-TGB or non-Veteran subcontractor firm, including an owner-operator. The TGB or Veteran subcontractor who leases trucks from a non-TGB or Veteran subcontractor is entitled to credit for the total value of transportation services provided by non-TGB or non-Veteran subcontractor lessees not to exceed the value of transportation services provided by TGB or Veteran trucks on the contract. Additional participation by non-TGB or non-Veteran subcontractor lessees receives credit only for the fee or commission it receives as a result of the lease arrangement.

13.5.6 For purposes of this section, a lease must indicate that the TGB or Veteran subcontractor has exclusive use of and control over the truck. This does not preclude the leased truck from working for others during the term of the lease with the consent of the TGB or Veteran, so long as the lease gives the TGB or Veteran subcontractor absolute priority for the use of the leased truck. Leased trucks must display the name and identification number of the TGB or Veteran business.

13.6 MnDOT will count expenditures with TGB or Veteran subcontractor(s) for materials or supplies toward TGB or Veteran subcontractor goals as provided in the following:

13.6.1 MnDOT will count 100% of the cost of the materials or supplies toward TGB or Veteran subcontractor goals if the materials or supplies are obtained from a TGB or Veteran manufacturer.

13.6.2 For purposes of this section, a manufacturer is a firm that operates or maintains a factory or establishment that produces, on the premises, the materials, supplies,

articles, or equipment required under the contract and of the general character described in the specifications.

13.6.3 If the materials or supplies are purchased from a TGB or Veteran regular dealer, MnDOT will count 60% of the cost of the materials or supplies toward TGB or Veteran goals.

13.6.4 For purposes of this section, a regular dealer is a firm that owns, operates, or maintains a store, warehouse, or other establishment in which the materials, supplies, articles or equipment of the general character described by the specifications and required under the contract are bought, kept in stock, and regularly sold to or leased to the public in the usual course of business.

A. To be a regular dealer, the firm must be an established, regular business that engages, as its principal business and under its own name, in the purchase and sale or lease of the products in question.
B. A person may be a regular dealer in such bulk items as petroleum products, steel, cement, gravel, stone or asphalt without owning, operating, or maintaining a place of business if the person both owns and operates distribution equipment for the products. Any supplementing of regular dealers' own distribution equipment shall be by a long-term lease agreement and not on an ad hoc or contract-by-contract basis.
C. Packagers, brokers, manufacturers' representatives, or other persons who arrange or expedite transactions are not regular dealers within the meaning of this section.

13.6.5 With respect to materials or supplies purchased from a TGB or Veteran which is neither a manufacturer nor a regular dealer, MnDOT will count the entire amount of fees or commissions charged for assistance in the procurement of the materials and supplies, or fees or transportation charges for the delivery of materials or supplies required on a job site, toward TGB or Veteran goals, provided MnDOT determines the fees to be reasonable and not excessive as compared with fees customarily allowed for similar services. MnDOT, however, will not count any portion of the cost of the materials or supplies themselves toward TGB or Veteran goals.

13.7 MnDOT will not count the participation of a TGB or Veteran subcontractor toward the contractor's final compliance with its TGB or Veteran s subcontractor obligations on a contract until the amount being counted has been actually paid to the TGB or Veteran business(s).

14. Failure to Fulfill TGB or Veteran Business Subcontract Commitments

14.1 A contractor that fails to fulfill the TGB and Veteran business commitments is subject to appropriate administrative sanctions if the following factors exist:

a. the contractor fails to either (1) meet, or (2) make adequate good faith efforts to meet, the TGB and Veteran business commitment it represented in its GFE submission;

b. the failure is through no fault of the TGB and Veteran business firm; and

c. the failure is not the result of a modification made by MnDOT or the project owner that reduces the scope of work the TGB and Veteran business is to perform.

14.2 Sanctions may include, but are not limited to, MnDOT withholding progress payments and monetary deductions from the contract proceeds. MnDOT may deduct a sum equal to the portion of the TGB and Veteran business commitment not fulfilled.

14.3 MnDOT may allow for an adjustment of the contractor's TGB and Veteran business commitment if a TGB or Veteran business participant that was part of the original commitment fails to perform and cannot be replaced with another TGB or Veteran business subcontractors despite the contractor's adequate good faith efforts to find another TGB or Veteran business to perform the same amount of work.

15. TGB AND VETERAN BUSINESS REPLACEMENT

15.1 The contractor must request prior written consent from MnDOT to terminating a TGB or Veteran business. Written consent is required if the termination occurs any time after a contractor submits an affidavit, subcontract or the TGB and Veteran business Description of Work and Field Monitoring Report (Exhibit A), indicating the TGB or Veteran business firm will perform on the project. This includes, but is not limited to, instances in which a prime contractor seeks to perform work originally designated for a TGB and Veteran business subcontractor with its own forces or those of an affiliate, a non-TGB or non-Veteran business, or with another TGB or Veteran business firm.

15.2 MnDOT will only provide such written consent if it agrees, for reasons stated in its concurrence document, that the prime contractor has good cause to terminate the TGB or Veteran business firm. Good cause includes the following circumstances:

a) The listed TGB or Veteran business subcontractor fails or refuses to execute a written contract;

b) The listed TGB or Veteran subcontractor fails or refuses to perform the work of its subcontract in a way consistent with normal industry standards. Provided, however, that good cause does not exist if the failure or refusal of the TGB or Veteran subcontractor to perform its work in the subcontract results from the bad faith or discriminatory action of the prime contractor;

c) The listed TGB or Veteran subcontractor fails or refuses to meet the prime contractor's reasonable, nondiscriminatory bond requirements;

d) The listed TGB or Veteran subcontractor becomes bankrupt, insolvent, or exhibits credit unworthiness;

e) The listed TGB or Veteran business subcontractor is ineligible to work on public works projects because of suspension and debarment proceedings under applicable state law;

f) MnDOT has determined that the listed TGB or Veteran business subcontractor is not a responsible contractor;

g) The listed TGB or Veteran business subcontractor voluntarily withdraws from the project and provides to MnDOT written notice of its withdrawal;

h) The listed TGB or Veteran business is ineligible to receive TGB or Veteran business credit for the type of work required;

i) A TGB or Veteran business owner dies or becomes disabled with the result that the listed TGB or Veteran business contractor is unable to complete its work on the contract;

j) Other documented good cause that MnDOT determines compels the termination of the TGB or Veteran business subcontractor. Provided, that good cause does not exist if the prime contractor seeks to terminate a TGB or Veteran business it relied upon to obtain the contract so that the prime contractor can self-perform the work for which the TGB or Veteran business contractor was engaged, or so that the prime contractor can substitute another TGB or Veteran business or non-TGB or non-Veteran business contractor after contract award.

15.3 Before transmitting to MnDOT its request to terminate and/or substitute a TGB or Veteran business subcontractor, the prime contractor must give notice in writing to the TGB or Veteran business subcontractor, with a copy to MnDOT, of its intent to request to terminate and/or substitute, and the reason for the request.

15.4 The prime contractor must give the TGB or Veteran business five days to respond to the prime contractor's notice and advise MnDOT and the contractor of the reasons, if any, why it objects to the proposed termination of its subcontract and why MnDOT should not approve the prime contractor's action. If required in a particular case as a matter of public necessity (e.g., safety), MnDOT may provide a period of shorter than five days.

15.5 In addition to post-award terminations, this process applies to pre-award deletions of or substitutions for TGB or Veteran business firms put forward by the ALB in negotiated procurements. MnDOT will impose appropriate administrative sanctions for non-compliance with these removal requirements.

15.6 MnDOT staff may assist the contractor, when requested, in identifying TGB or Veteran business replacement firms. This assistance may include but is not limited to:

15.6.1 Providing the contractor with information regarding the availability of other TGB and Veteran businesses.

15.6.2 Providing the contractor with assistance in locating available TGB and Veteran businesses.

16. PAYMENTS

16.1 Minnesota Statutes §16A.1245 requires that the prime contractor agrees to pay each subcontractor within ten (10) days of the prime contractor's receipt of payment from the state for undisputed services provided by the subcontractor. The prime contractor is subject to pay interest charges of 1-1/2 percent per month, or any part of a month, to the subcontractor on any undisputed amount not paid to the subcontractor within the ten (10) day period. This provision applies to

16.2 Contractors making payments to Contractors, Subcontractors, Suppliers, and Service Providers, regardless of their tier or TGB or Veteran status, are required to complete and submit Contractor Payment Form(s) to the MnDOT Office of Civil Rights (OCR), each time payments are made to subcontractors until final payment is made, no later than ten (10) days after receiving payment from MnDOT.

16.3 Failure to comply with the Contractor Payment Form submission requirement or Minnesota's prompt payment law may cause progress payments to be withheld.

16.4 At the conclusion of the contract, the prime contractor must present the TGB and Veteran-owned Businesses Total Payment Affidavit to the MnDOT Office of Civil Rights. The affidavit must show the total dollar amount of work performed by each TGB and Veteran business. Submission of this information is a condition of payment.

16.5 Bidders who submit a bid are hereby notified that the Minnesota False Claims Act (Minn. Stat. §15C.02) applies to statements and certifications made in connection with the TGB and Veteran programs.

TARGETED GROUP AND VETERAN-OWNED SMALL BUSINESSES PREFERENCE FORM

Name of Contractor/Consultant	S.P. #	Date of Letting
Address	City	State/Zip
Contact Person/ EEO Officer	Phone Number	E-Mail Address

☐ The business is an eligible TGB as shown in the MN Department of Administration online directory at: http://www.mmd.admin.state.mn.us/process/search/

OR

The business is an eligible Veteran-owned small business owned and operated by either (check the box that applies and attach the certification documents required with your response to this solicitation):

☐ Veterans as defined in Minnesota Statutes §197.447, who are verified by the United States Department of Veterans Affairs as being a veteran-owned small business as shown in the online directory at: http://www.vip.vetbiz.gov The business must be VA verified at the time proposals are due.

OR

☐ Recently separated veterans, who are veterans as defined in Minnesota Statutes §197.447, who have served in active military service, at any time on or after September 11, 2001, and who have been discharged under honorable conditions from active service, as indicated by the person's United States Department of Defense form DD-214 or by the commissioner of veterans affairs. The bidder must provide:

- A copy of the verification as a veteran-owned small business issued by the United States Department of Veterans Affairs (VA). The business must be VA verified at the time proposals are due.
- Discharge form (DD-214) dated on or after September 11, 2001 with condition honorable.

OR

☐ Veterans as defined in Minnesota Statutes §197.447, who are verified by the United States Department of Veterans Affairs as being a service-disabled veteran-owned small business. The bidder must provide:

- A copy of the verification as a service-disabled veteran-owned small business issued by the United States Department of Veterans Affairs (VA). The business must be VA verified at the time proposals are due.

You must submit this form and the documentation required above with your response in order to be considered for this preference.

I certify that the information contained herein is true, accurate, and complete.

Signed _____
Bidder or authorized representative

Office of Civil Rights
TARGETED GROUP AND VETERAN-OWNED SMALL BUSINESS
REQUEST FOR WAIVER FORM

S.P. _____ Letting Date _____

☐ I hereby request a waiver from the Targeted Group Business (TGB) subcontract goal on the grounds that qualified TGBs are not reasonably available. I have provided a detailed explanation of the efforts I made to obtain TGB participation and the determination that TGBs are not reasonably available to perform on this project.

☐ I hereby request a waiver from the Veteran-owned businesses subcontract goal on the grounds that qualified Veteran-owned businesses are not reasonably available. I have provided a detailed explanation of the efforts I made to obtain Veteran-owned business participation and the determination that Veteran-owned businesses are not reasonably available to perform on this project.

I certify that the information contained herein is true, accurate, and complete.

Signed _____
Bidder or Authorized Representative

Bidders requesting a waiver must complete and submit the following:

1. A summary explaining the bidder's determination that TGB and/or Veteran-owned businesses are not reasonably available.
2. Certificate of Good Faith Efforts
3. Affidavit of Good Faith Efforts
4. Bidders List
5. Description of Work (Exhibit A) for each TGB or Veteran-owned businesses participating on the project.
   Prime Contractor_____State Project #_____

TGB & Veteran-Owned Business Description of Work (Exhibit A) and Field Monitoring Report

A contract will not be awarded to the Prime Contractor unless this form is submitted for each TGB and Veteran-owned business participating in the contract. This form is complete when the TGB or Veteran-owned business subcontractor has filled in **all of the applicable information in sections A and B, and signs in section C.** PLEASE PRINT CLEARLY OR TYPE.

Section (A): (All TGB & Veteran-Owned Subcontractors and Suppliers, including Trucking firms must complete this Section.)
MUST BE COMPLETED BY THE PRINCIPAL

Check One: ☐ **TGB** **or** ☐ **Veteran-Owned Business**

Letting Date: _____ State Project Number: _____

Prime Contractor: _____ Phone #: _____

TGB/Veteran Subcontractor: _____ Phone #: _____

TGB/Veteran Principal Name: _____ Total Subcontract $: _____

TGB/Veteran Participation Claimed: Percent _____% Amount _____

1. Did you bid and sign a subcontract agreement with the above-named prime contractor? _____
2. Are the items, quantities, and prices listed on the subcontract agreement or affidavit correct?_____
3. List the line items to be performed: _____

_____

4. Are there any other agreements not addressed in the subcontract? If yes, please explain:_____

_____

5. If equipment to be used on this contract is not owned by the TGB/Veteran-owned business, please provide the following information:
   a. Will the renting or leasing include any of the following: (Attach a copy of the lease/rental agreement(s)).
      Equipment _____ Insurance _____ Operator _____ or Maintenance _____
   b. Lessor's name: _____
      Amount to be paid: _____ Number of days to be used: _____
6. Will there be any other firm(s) providing work listed in your subcontract?
   If yes, answer the following: Firm's Name: _____ $ amount of the work: _____
7. What is the name of the person supervising your work on this project? _____
   Is this your employee? _____
8. How many people will you be employing on this project? _____ Minorities: _____ Females: _____
9. Total dollar amount of materials to be supplied? _____
10. Who are you purchasing the materials from? _____
11. Please submit Purchase Agreement and/or Purchase Order from manufacturer(s) or primary material supplier(s).
    NOTE: This Exhibit 'A' will not be approved without the Purchase Agreement/Purchase Order.
12. Please list all subcontracts that your firm will be performing during the current construction season including contracts that are not in the TGB or Veteran-owned Business Programs (attach additional sheet if necessary)

	Project Number	Prime Contractor	Project Location	# of Working Days
1.				
2.				
3.				

Section (B):TO BE COMPLETED ONLY BY THE TGB OR VETERAN-OWNED BUSINESS TRUCKER

1. The number of hours contracted or quantities to be hauled on this project? _____
2. How many fully operational units will be used on this Project? _____ (Tractor/trailers: _____ Dump trucks:_____)
3. How many fully operational units will be yours? _____ (Dump trucks: _____ Tractors/trailers: _____)
4. How many other units will be yours? _____ (Tractors: _____ Trailers: _____)
5. If ITO's or trucking companies are to be used on this project answer the following (attached additional sheet if necessary):

Name of ITO/Company		Dollar Amount of Contract/Agreement	Number of Dump Trucks, Tractors/Trailers (specify)
1.			
2.			
3.			

Section (C): (**All** TGB and Veteran-owned Subcontractors and Suppliers, including Trucking firms, must complete Section C.)

I hereby certify that the information presented above is correct. I agree to inform the Office of Civil Rights in writing of any changes within 10 days of the change(s).

Company: _____

Principal: _____ _____ _____
Signature Title Date

Section (D): TO BE COMPLETED BY MnDOT OFFICE OF CIVIL RIGHTS STAFF PERSON

Project Number: _____ District # _____

MnDOT OCR Staff Person: _____ Phone No. _____

Project Engineer: _____ On-site Phone #: _____

Office Phone #: _____

Section (E): TO BE COMPLETED BY PROJECT ENGINEER WHEN THE TGB OR VETERAN-OWNED BUSINESS HAS COMPLETED $^{1}/_{3}$ TO ½ OF ITS WORK ON THE CONTRACT

1. Does it appear that the firm is performing the work specified in (Exhibit "A") description of work?
   Yes _____ No _____
2. Does it appear that the subcontractor is managing their portion of the project and using their own company employees?
   Yes _____ No _____
3. Does it appear that the subcontractor is providing the equipment for their items of work or other work specified?
   Yes _____ No _____
4. Does it appear that the quality of the subcontractor's performance, scheduling and project management are meeting industry standards? Yes _____ No _____
5. Comments: _____
   _____

NOTE: If you, as the Project Engineer, have checked "NO" to any of the above questions or have any other comments, it is important that you contact the MnDOT Office of Civil Rights Staff Person assigned to this project.

Project Engineer: _____ Date: _____

MINNESOTA DEPARTMENT OF TRANSPORTATION
OFFICE OF CIVIL RIGHTS

CERTIFICATE OF GOOD FAITH EFFORTS

S.P. _____ Letting Date _____ **TGB** **Veteran-owned Business**

Prime Contractor _____ Commitment _____ Commitment _____

Low Bid _____ Goal _____ Goal_____

LIST YOUR SOLICITATION OF ALL SUBCONTRACTORS, SUPPLIERS, AND SERVICE PROVIDERS

Subcontractor/Supplier/Service provider	TGB	VET	Phone	Dates, Method of Contact		Description of Work	Dollar Amount of Quote
				Letter	Phone		
1.							
2.							
3.							
4.							
5.							
6.							
7.							
8.							
9.							
10.							

(Make additional copies of this form as necessary)

I certify that the information above is true, accurate, and complete.

_____ Page ____ of _____

Bidder or Authorized Representative

MINNESOTA DEPARTMENT OF TRANSPORTATION
OFFICE OF CIVIL RIGHTS

BIDDERS LIST

S.P. _____ Letting Date _____ **TGB** **Veteran-owned Business**

Prime Contractor _____ Commitment _____ Commitment _____

Low Bid _____ Goal _____ Goal _____

List all comparative quotes of participants performing on the project and participants that bid. Include Subcontractors, Suppliers, Sub-consultants & Service providers.

Name, Contact Name and Phone number of Contractor *	Check (√) Firms That Will Be Used	Description of Work	Dollar Amount of Subcontract/Quote
1.			
2.			
3.			
4.			
5.			
6.			
7.			
8.			
9.			
10.			
11			
12.			

* Please indicate with an asterisk (*) or check mark (√) which subcontractors, suppliers, sub-consultants & service providers you will be using on the project.

(Make additional copies of this form as necessary)

MnDOT OCR
12/2012

Page ____ of _____

Minnesota Department of Transportation
Office of Civil Rights

Contractor Payment Form

State Project Number: _____ Prime _____ Subcontractor _____

Payment Reporting Period: (From: _____ To: _____)

Instructions: All Contractors making payments to subcontractors, regardless of their tier or TGB/Veteran-owned business status, are required to complete and submit this form to MnDOT's Office of Civil Rights (OCR) until final payment is made. Include payments to subcontractors, service providers, sub-consultants & independent contractors. Failure to comply with this form and Minnesota's prompt payment law may cause progress payments to the prime contractor to be withheld. Submit one copy of this form to the OCR Office and one to the project engineer, no later than ten (10) days after receiving payment from MnDOT.

Contractor's Name, Address, Telephone Number	Original Contract Amount	Committed %		Actual to Date	
		TGB	Veteran	TGB	Veteran

Name of Subcontractor/Supplier	TGB/Vet (indicate)	Description of Work	Subcontract Amount
1.		1.	1.
2.		2.	2.
3.		3.	3.

Amount of Current Payment	% Paid to date	Final Payment? Yes / No
1.	1.	1.
2.	2.	2.
3.	3.	3.

Company Official's Signature & Title	Date Signed	Name & Title of Individual Completing Report (Type or Print Clearly)

(This form may be submitted in an alternate format)

I certify that the information above is true, accurate, and complete.

_____ Page ____ of _____
Bidder or Authorized Representative

Minnesota Department of Transportation
Office of Civil Rights

GOOD FAITH EFFORTS AFFIDAVIT

STATE OF MINNESOTA
COUNTY OF _____

I, _____ being first duly sworn, state as follows:

1. I am the _____ of _____ organization that has been identified as the apparent low bidder of the State Project _____.

2. I have the authority to make this affidavit for and on behalf of the apparent low bidder.

3. The information provided in the attached Certificate of Good Faith Efforts is true and accurate to the best of my belief.

Signed _____ _____ _____
Bidder or authorized representative Title Date

Subscribed and sworn to before me

This _____ day of _____, 20____

_____
Notary Public

My commission expires _____, 20_____

EQUAL EMPLOYMENT OPPORTUNITY (EEO) SPECIAL PROVISIONS

This section of Special Provisions contains the Equal Employment Opportunity (EEO) rules and regulations for highway construction projects in Minnesota which are federally and/or State funded.

The source of funding determines which EEO regulations and goals (Federal and/or State goals) apply to a specific project. When a project contains funding from both Federal and State sources, both sets of regulations apply, and the Minnesota Department of Transportation (MnDOT) monitors and reviews projects at both levels.

If the project contains any Federal funding, and has a total dollar value exceeding $10,000, Federal EEO regulations and goals apply (pages 2, 6, 7-8, 9-14, 15, 16-17, 22-26, 27-38). The MnDOT Office of Civil Rights monitors and reviews these projects on behalf of the Federal Highway Administration (FHWA), under Federal statutes (23 USC 140) and rules (23 CFR 230).

If the project contains any State funding, and has a total dollar value exceeding $100,000, State EEO regulations and goals apply (pages 2, 3, 4, 5, 6, 9-14, 16-22). MnDOT's Office of Civil Rights monitors and reviews these projects in conjunction with the Minnesota Department of Human Rights under Minnesota Statutes §363A.36 and its accompanying rules.

MnDOT has established a single review and monitoring process which meets both Federal and State requirements.

Please note that Pages 23-38 of these Special Provisions may be omitted from projects with no Federal funding.

CONTENTS

Notice of Requirement for Affirmative Action 2
Notice of Pre-Award Reporting Requirements....3
Minnesota Affirmative Action Requirements....4
Appropriate Work Place Behavior....5
Notice to All Prime and Subcontractors: Reporting Requirements....6
Specific Federal Equal Employment Opportunity Responsibilities 7
Standard Federal and State Equal Employment Construction Contract Specifications 9
Equal Opportunity Clause....15
Minority and Women Employment Goals Chart....16
Sample Summary of Employment Activity, Form EEO-12 18
Sample Monthly Employment Compliance Report, Form EEO-13 20
EEO Compliance Review Report 22
On-The-Job Training Program: Trainee Assignment 23
Certification of On-the-Job Training Hours: Federal-Aid Projects 24
On-the-Job Training (OJT) Program Approval Form....25
On-the-Job Training (OJT) Program Trainee Termination Form....26
Required Contract Provisions: Federal-Aid Construction Contracts....27

NOTICE OF REQUIREMENT FOR AFFIRMATIVE ACTION TO ENSURE EQUAL EMPLOYMENT OPPORTUNITY (23 USC 140, 23 CFR 230 and Minnesota Statute §363A.36)

1. The offerer's or bidder's attention is called to the "Minnesota Affirmative Action Requirements" (EEO Page 4), the "Specific Federal Equal Employment opportunity Responsibilities" (EEO Pages 7-8), the "Standard Federal and State Equal Employment Opportunity Construction Contract Specifications" (EEO Pages 9-14), the "Equal Opportunity Clause" (EEO Page 15) and "Required Contract Provisions - Federal-Aid Construction Contracts" (EEO Pages 27-38).

2. The goals and timetables for minority and women participation, expressed in percentage terms of hours of labor for the Contractor's aggregate work force in each trade on all construction work in the covered area, are as shown on EEO Pages 16-17.

   These goals are applicable to all the Contractor's construction work (whether or not it is State or State assisted, Federal or federally assisted) performed in the covered area. If the Contractor performs construction work in a geographical area located outside of the covered area, it shall apply the goals established for such geographical area where the work is actually performed. With regard to this second area, the Contractor also is subject to the goals for both its federally involved and non-federally involved construction.

   The Contractor's compliance with the regulations in 41 CFR Part 60-4, and/or Minnesota Statutes §363A.36 and its accompanying rules shall be based on its implementation of the Equal Opportunity Clause, specific affirmative action obligations required by the specifications set forth in 41 CFR 60-4.3(a) for Federal or federally assisted projects, and Minnesota Statutes §363A.36, and its accompanying rules for State or State assisted projects, and its efforts to meet the goals established for the geographical area where the contract resulting from this solicitation is to be performed. The hours of minority and women employment and training must be substantially uniform throughout the length of the contract, and in each trade, and the Contractor shall make a good faith effort to employ minorities and women evenly on each of its projects. The transfer of minority and women employees or trainees from contractor to contractor or from project to project for the sole purpose of meeting the Contractor's goals shall be a violation of the contract, the Executive Order and the regulations in 41 CFR Part 60-4 for Federal or federally-assisted projects and/or Minnesota Statutes §363A.36 and its accompanying rules for state or state-assisted projects. Compliance with the goals will be measured against the total work hours performed.

3. If the contract is federally funded, the Contractor shall provide written notification to the Director of the Office of Federal Contract Compliance Programs (OFCCP) within ten working days of award of any construction subcontract in excess of $10,000 at any tier for construction work under the contract resulting from this solicitation. If the contract is state funded, the Contractor shall provide written notification to the Compliance Division, Minnesota Department of Human Rights, Freeman Building, 625 Robert Street North, Saint Paul, Minnesota 55155 within ten working days of award of any construction subcontract in excess of $100,000 at any tier for construction work under the contract resulting from this solicitation. The notification shall list the name, address and telephone number of the Subcontractor; employer identification number of the Subcontractor; estimated dollar amount of the subcontract; estimated starting and completion dates of the subcontract; and the geographical area in which the contract is to be performed.

4. As used in this Notice, and in the contract resulting from this solicitation, the "covered area" is the county or counties of the State of Minnesota where the work is to be performed.

NOTICE TO ALL PRIME AND SUBCONTRACTORS
PRE-AWARD REPORTING REQUIREMENTS

In order to ensure compliance with Federal and State laws and regulations (23 USC 140, and 23 CFR 230, and Minnesota Statutes §363A.36) and to ensure Mn/DOT's ability to monitor and enforce compliance efforts, the following requirements apply if the apparent low bid exceeds $ 5,000,000.00:

1) The Apparent Low Bidder ("ALB") must provide to Mn/DOT the "EEO-8 Form" (also entitled "EEO Compliance Review Report"), which must provide detail on the contractor's total company workforce in the State of Minnesota during the twelve month period preceding July 30th of the previous year (Office and/or clerical personnel need not to be included).

2) The ALB must provide to Mn/DOT a work plan for meeting the minority and women employment goals established by the Minnesota Department of Human Rights, for the project in question. The work plan must include, at a minimum (1) how the ALB will incorporate its current minority and women employees in the ALB's efforts to meet the established goals; and (2) a contingency plan if the ALB has determined that its current workforce is not sufficient in order to achieve the established employment goals. If the ALB relies in whole or in part upon unions as a source of employees, then the ALB must (1) include a list of established organizations that are likely to yield qualified minority and women candidates if those union(s) are unable to provide a reasonable flow of minority and women candidates in their work plan; and (2) document the method by which these organizations will refer candidates to the ALB for employment opportunities. All bidders are hereby notified that the U.S. Department of Labor has determined that a contractor will not be excused from complying with the Federal and State laws and regulations cited above based solely on the fact that a contractor has a collective bargaining agreement with a union providing for the union to be the exclusive source of referral and that the union failed to refer minority employees. A contractor may obtain a list of organizations likely to yield qualified minority and women candidates from the Mn/DOT Office of Civil Rights.

3) The ALB must provide to Mn/DOT the ALB's total workforce and labor projections for the project (represented in hours), the ALB's projected total number of minority hours for the project, and the ALB's projected total number of women hours for the project. The details must include the trade(s) that will be utilized in order to complete the project.

The ALB must submit documents as required to comply with this section no later than five business days after the date that bids for the contract are opened. The five day period starts the business day following the date that bids were opened. The required documents must be received prior to Contract Award, and must be sent to the Mn/DOT Office of Civil Rights – 395 John Ireland Blvd., Mail Stop 170 St. Paul, MN 55155-1899. Submittal of the documents described in (1), (2) and (3) is required for contract award to the ALB. The submitted documents will be used as a tool to assist contractors in meeting employment goals; the content itself will not be evaluated for the purpose of determining contract award.

MINNESOTA AFFIRMATIVE ACTION REQUIREMENTS

1. It is hereby agreed between the parties to this contract that Minnesota Statutes, Section §363A.36, and its accompanying rules are incorporated into any contract between these parties based upon this specification or any modification of it. A copy of Minnesota Statutes, Section §363A.36, and its accompanying rules is available upon request from the contracting agency. The Contractor hereby agrees to comply with the rules and relevant orders of the Minnesota Department of Human Rights issued pursuant to the Minnesota Human Rights Act.

2. It is hereby agreed between the parties to this contract that this agency requires that the Contractor meet affirmative action criteria as provided for by Minnesota Statutes §363A.36 and its accompanying rules. It is the intent of the Minnesota Department of Transportation to fully carry out its responsibility for requiring affirmative action, and to implement sanctions for failure to meet these requirements. Failure by a contractor to implement an affirmative action plan, meet project employment goals for minority and women employment or make a good faith effort to do so may result in revocation of his/her Certificate of Compliance or suspension or revocation of the contract (Minnesota Statutes §363A.36).

3. Under the affirmative action obligation imposed by the Human Rights Act, Minnesota Statutes, Section §363A.36, contractors shall take affirmative action to employ and advance in employment minority, female, and qualified disabled individuals at all levels of employment. Affirmative action must apply to all employment practices, including but not limited to hiring, upgrading, demotion or transfer; recruitment or recruitment advertising; layoff or termination; rates of pay or other forms of compensation, and selection for training, including apprenticeship. The Contractor shall recruit, hire, train and promote persons in all job titles, without regard to race, color, creed, religion, sex, national origin, marital status, status with regard to public assistance, physical or mental disability, sexual orientation or age except where such status is a bona fide occupational qualification. These affirmative action requirements of the Minnesota Human Rights Act are consistent with but broader than the Federal requirements as covered in this contract.

4. Affirmative Action for disabled workers. The Contractor shall not discriminate against any employee or applicant for employment because of a physical or mental disability in regard to any position for which the employee or applicant for employment is qualified. The Contractor agrees to take affirmative action to employ, advance in employment, and otherwise treat qualified disabled individuals without discrimination based upon their physical or mental disability in all employment practices such as employment, upgrading, demotion or transfer, recruitment, advertising, layoff or termination, rates of pay or other forms of compensation, and selection for training (including apprenticeship). In the event of the Contractor's noncompliance with the requirements of this clause, actions for noncompliance may be taken in accordance with Minnesota Statutes, section §363A.36 and the rules and relevant orders of the Minnesota Department of Human Rights pursuant to the Minnesota Human Rights Act.

5. The Contractor agrees to post in conspicuous places, available to employees and applicants for employment, notices in a form to be prescribed by the commissioner of the Minnesota Department of Human Rights. Such notices shall state the Contractor's obligation under the law to take affirmative action to employ and advance in employment minority, women and qualified disabled employees and applicants for employment, and the rights of applicants and employees. **A poster entitled "Contractor Non-discrimination is the Law" may be obtained from: Compliance Unit, Minnesota Department of Human Rights, Freeman Building, 625 Robert Street North, Saint Paul, Minnesota 55155**. (651) 539-1100, TTY 296-1283, Toll Free 1-800-657-3704.

6. The Contractor shall notify each labor union or representative of workers with which he/she has a collective bargaining agreement or other contract understanding, that the Contractor is bound by the terms of Minnesota Statutes, section §363A.36 of the Minnesota Human Rights Act, and is committed to take affirmative action to employ and advance in employment minority, women and qualified physically and mentally disabled individuals.

APPROPRIATE WORK PLACE BEHAVIOR ON Mn/DOT CONSTRUCTION PROJECTS UTILIZING STATE FUNDS

It is the Minnesota Department of Transportation's (MnDOT's) policy to provide a workplace free from violence, threats of violence, harassment and discrimination. MnDOT has established a policy of zero tolerance for violence in the workplace. Contractors who perform work on MnDOT construction projects, or local government entities or public agencies utilizing state funds on highway construction projects, shall maintain a workplace free from violence, harassment and discrimination (See definitions, below).

Definitions:

1. Violence is the threatened or actual use of force which results in or has a high likelihood of causing fear, injury, suffering or death. Employees are prohibited from taking reprisal against anyone who reports a violent act or threat.

2. Harassment is the conduct of one employee (toward another employee) which has the purpose or effect of 1) unreasonably interfering with the employee's work performance, and/or 2) creating an intimidating, hostile or offensive work environment. Harassment is not legitimate job-related efforts of supervisor to direct/evaluate an employee or to have an employee improve work performance.

A. Unlawful discriminatory harassment is harassment which is based on these characteristics: race, color, creed, religion, national origin, sex, disability, age, marital status, status with regard to public assistance or sexual orientation. Managers, supervisors and employees shall not take disciplinary or retaliatory action against employees who make complaints of sexual harassment.

Sexual harassment is unwelcome sexual advances, requests for sexual favors, or sexually motivated physical contact, or other verbal or physical conduct or communication of a sexual nature, when submission to that conduct or communication is 1) made a term or condition, either explicitly or implicitly, of obtaining employment; or 2) is used as a factor in decisions affecting an individual's employment; or 3) when that conduct or communication has the purpose or effect of substantially interfering with an individual's employment or creating an intimidating, hostile or offensive work environment, and the employer knows or should have known of the existence of the harassment and fails to take timely and appropriate action. Examples include but are not limited to insulting or degrading sexual remarks or conduct; threats, demands or suggestions that status is contingent upon toleration or acquiescence to sexual advances; displaying in the workplace sexually suggestive objects, publications or pictures, or retaliation against employees for complaining about the behavior cited above or similar behaviors.

B. General harassment is harassment which is not based on the above characteristics. Examples may include, but are not limited to: physically intimidating behavior and/or threats of violence; use of profanity (swearing), vulgarity; ridiculing, taunting, belittling or humiliating another person; inappropriate assignments of work or benefits; derogatory name calling.

3. Discrimination includes actions which cause a person, solely because of race, color, creed, religion, national origin, sex, disability, age, marital status, status with regard to public assistance or sexual orientation to be subject to unequal treatment.

Prime Contractors who work on MnDOT projects shall ensure that their managers, supervisors, foremen/women and employees are familiar with MnDOT's policy on appropriate work place behavior; and shall ensure that their subcontractors are familiar with this policy. Managers, supervisors and foremen/women will respond to, document, and take appropriate action in response to all reports of violence, threats of violence, harassment or discrimination. Failure to comply with this policy may result in cancellation, termination or suspension of contracts or subcontracts currently held and debarment from further such contracts or subcontracts as provided by statute. If you need additional information or training regarding this policy, please contact the Office of Civil Rights at (651) 366-3073.

NOTICE TO ALL PRIME AND SUBCONTRACTORS
REPORTING REQUIREMENTS

1. In order to monitor compliance with Federal Statutes 23 USC 140 and 23 CFR 230, and Minnesota Statutes §363A.36, all prime contractors and subcontractors are required to complete a Mn/DOT Monthly Employment Compliance Report each month for each project (Form EEO-13, sample copy at EEO Pages 20-21.) Prime contractors are also required to complete a Contractor Employment Data Report (Form EEO-12, sample copy at EEO Pages 18-19) once prior to work commencing on the project, unless one has been completed already within the calendar year.

   The prime contractor of each project collects Monthly Employment Compliance Reports from each subcontractor who performed work during the month, and completes a Monthly Employment Compliance Report on its own work force. **For the month of July only, an EEO-13 is required for each payroll period within the month of July**. The prime contractor submits the EEO-13 forms to the Mn/DOT Project Engineer by the 15th day of the subsequent month.

   Failure to submit the required reports in the allowable time frame will be cause for the imposition of contract sanctions.

   It is the intent of Mn/DOT to implement monitoring measures on each project to ensure that each prime contractor and subcontractor is promoting the full realization of equal employment opportunities. Any project may be scheduled for an in depth on-site contract compliance review. During the scheduled on-site review, the Contractor will be required to provide to Mn/DOT documentation of its "good faith efforts" as shown in EEO Pages 10-13, at 7 a-p of this contract.

2. If a Federally funded project requires On-the-Job-Training (OJT) participation, information is provided in the contract and can be located by referring to the Table of Contents for Division S. (OJT is also listed as a bid line item under Trainees.) When a contract requires OJT participation, the Prime Contractor shall submit a training plan as indicated in the Proposal. The training plan shall include the job classification titles of trainees, planned training activities and the approximate start date of trainees.

3. When a Contractor selects a trainee applicant for OJT, the Contractor completes an On the Job Training Program-Trainee Assignment form (sample copy at EEO Page 23) and submits it to the Contract Compliance Specialist (CCS) assigned to the project for approval. The CCS notifies the Contractor and Project Engineer when the applicant is approved.

4. Hours of work performed by OJT employees shall be documented on a monthly basis on the Certification of On-The-Job Training Hours form, (Mn/DOT Form No. 21860, sample copy at EEO Page 24). The Contractor shall submit the original and one copy to the Project Engineer, and one copy to the CCS assigned to the project.

Do not remove forms from this contract. Please duplicate forms from the copies in this contract, or the Mn/DOT Office of Civil Rights will provide these forms upon request. Please call the Office of Civil Rights, (651) 366-3073.

SPECIFIC FEDERAL EQUAL EMPLOYMENT OPPORTUNITY RESPONSIBILITIES (23 CFR 230, Subpart A, Appendix A, FAPG June 6, 1996)

1. General.
a. Equal employment opportunity requirements not to discriminate and to take affirmative action to assure equal opportunity as required by Executive Order 11246 and Executive Order 11375 are set forth in Required contract Provisions (Form PR-1273 or 1316, as appropriate) and these Special Provisions which are imposed pursuant to Section 140 of title 23, U.S.C., as established by Section 22 of the Federal-Aid Highway Act of 1968. The requirements set forth in these Special Provisions shall constitute the specific affirmative action requirements for project activities under this contract and supplement the equal employment opportunity requirements set forth in the Required Contract Provisions.
b. The contractor will work with the State highway agencies and the Federal Government in carrying out equal employment opportunity obligations and in their review of his/her activities under the contract.
c. The contractor and all his/her subcontractors holding subcontracts not including material suppliers, of $10,000 or more, will comply with the following minimum specific requirement activities of equal employment Opportunity: (The equal employment opportunity requirements of Executive Order 11246, as set forth in volume 6, Chapter 4, Section 1, Subsection 1 of the Federal-Aid Highway program Manual, are applicable to material suppliers as well as contractors and subcontractors.) The contractor will include these requirements in every subcontract of $10,000 or more with such modification of language as is necessary to make them binding on the subcontractor.

2. Equal Employment Opportunity Policy.
The contractor will accept as his operating policy the following statement which is designed to further the provision of equal employment opportunity to all persons without regard to their race, color, religion, sex, or national origin, and to promote their full realization of equal employment through a positive continuing program:

It is the policy of this Company to assure that applicants are employed, and that employees are treated during employment, without regard to their race, religion, sex, color, or national origin. Such action shall include: employment, upgrading, demotion, or transfer; recruitment or recruitment advertising; layoff or termination; rates of pay or other forms of compensation; and selection for training, including apprenticeship, pre apprenticeship, and/or on-the-job training.

3. Equal Employment Opportunity Officer.
The contractor will designate and make known to State highway agency contracting officers an equal employment opportunity officer (hereinafter referred to as the EEO Officer) who will have the responsibility for and must be capable of effectively administering and promoting an active contractor program of equal employment opportunity and who must be assigned adequate authority and responsibility to do so.

4. Dissemination of Policy.
a. All members of the contractor's staff who are authorized to hire, supervise, promote, and discharge employees, or who recommend such action, or who are substantially involved in such action will be made fully cognizant of, and will implement, the contractor's equal employment opportunity policy and contractual responsibilities to provide EEO in each grade and classification of employment. To ensure that the above agreement will be met, the following actions will be taken as a minimum:
(1). Periodic meetings of supervisory and personnel office staff will be conducted before the start of work and then not less often than once every six months, at which time the contractor's equal employment opportunity policy and its implementation will be reviewed and explained. The meetings will be conducted by the EEO Officer or other knowledgeable company official.
(2). All new supervisory or personnel office employees will be given a thorough indoctrination by the EEO Officer or other knowledgeable company official, covering all major aspects of the contractor's equal employment opportunity obligations within thirty days following their reporting for duty with the contractor.
(3). All personnel who are engaged in direct recruitment for the project will be instructed by the EEO officer or appropriate company official in the contractor's procedures for locating and hiring minority group employees.
b. In order to make the contractor's equal employment policy known to all employees, prospective employees and potential sources of employees, i.e., schools, employment agencies, labor unions (where appropriate), college placement officers, etc., the contractor will take the following actions:
(1). Notices and posters setting forth the contractor's equal employment opportunity policy will be placed in areas readily accessible to employees, applicants for employment and potential employees.
(2). The contractor's equal employment opportunity policy and the procedures to implement such policy will be brought to the attention of employees by means of meetings, employee handbooks, or other appropriate means.

5. Recruitment.
a. When advertising for employees, the contractor will include in all advertisements for employees the notation "An Equal Opportunity Employer." All such advertisements will be published in newspapers or other publications having a large circulation among minority groups in the area from which the project work force would normally be derived.
b. The contractor will, unless precluded by a valid bargaining agreement, conduct systematic and direct recruitment through public and private employee referral sources likely to yield qualified minority group applicants, including, but not limited to, State employment agencies, schools, colleges and minority group organizations. To meet this requirement, the contractor will, through his/her EEO Officer, identify sources of potential minority group employees, and establish with such identified sources procedures whereby minority group applicants may be referred to the contractor for employment consideration.
In the event the contractor has a valid bargaining agreement providing for exclusive hiring hall referrals, he is expected to observe the provisions of that agreement to the extent that the system permits the contractor's compliance with equal employment opportunity contract provisions. (The U.S. Department of Labor has held that where the implementation of such agreements have the effect of discriminating against minorities or women, or obligates the contractor to do the same, such implementation violates Executive Order 11246, as amended.)
c. The contractor will encourage his present employees to refer minority group applicants for employment by posting appropriate notices or bulletins in areas accessible to all such employees. In addition, information and procedures with regard to referring minority group applicants will be discussed with employees.

6. Personnel Actions. Wages, working conditions, and employee benefits shall be established and administered, and personnel actions of every type, including hiring, upgrading, promotion, transfer, demotion, layoff, and termination, shall be taken without regard to race, color, religion, sex, or national origin. The following procedures shall be followed:
a. The contractor will conduct periodic inspections of project sites to insure that working conditions and employee facilities do not indicate discriminatory treatment of project site personnel.
b. The contractor will periodically evaluate the spread of wages paid within each

SPECIFIC FEDERAL EQUAL EMPLOYMENT OPPORTUNITY RESPONSIBILITIES *(cont.)*

classification to determine any evidence of discriminatory wage practices.
c. The contractor will periodically review selected personnel actions in depth to determine whether there is evidence of discrimination. Where evidence is found, the contractor will promptly take corrective action. If the review indicates that the discrimination may extend beyond the actions reviewed, such corrective action shall include all affected persons.
d. The contractor will promptly investigate all complaints of alleged discrimination made to the contractor in connection with his/her obligations under this contract, will attempt to resolve such complaints, and will take appropriate corrective action within a reasonable time. If the investigation indicates that the discrimination may affect persons other than the complainant, such corrective action shall include such other persons. Upon completion of each investigation, the contractor will inform every complainant of all his avenues of appeal.

7. Training and Promotion.
a. The contractor will assist in locating, qualifying, and increasing the skills of minority group and women employees and applicants for employment.
b. Consistent with the contractor's work force requirements and as permissible under Federal and State regulations, the contractor shall make full use of training programs, i.e. apprenticeship, and on-the-job training programs for the geographical area of contract performance. Where feasible, 25 percent of apprentices or trainees in each occupation shall be in their first year of apprenticeship or training. In the event the Training Special Provision is provided under this contract, this subparagraph will be superseded as indicated in Attachment 2.
c. The contractor will advise employees and applicants for employment of available training programs and entrance requirements for each.
d. The Contractor will periodically review the training and promotion potential of minority group and women employees and will encourage eligible employees to apply for such training and promotion.

8. Unions. If a contractor relies in whole or in part upon unions as a source of employees, the contractor will use his/her best efforts to obtain the cooperation of such unions to increase opportunities for minority groups and women within the unions, and to effect referrals by such unions of minority and female employees. Actions by the contractor either directly or through a contractor's association acting as agent will include the procedures set forth below:
a. The contractor will use best efforts to develop, in cooperation with the unions, joint training programs aimed toward qualifying more minority group members and women for membership in the unions and increasing the skills of minority group members and women so that they may qualify for higher paying employment.
b. The contractor will use best efforts to incorporate an equal employment opportunity clause into each union agreement to the end that such union will be contractually bound to refer applicants without regard to their race, color, religion, sex, or national origin.
c. The contractor is to obtain information as to the referral practices and policies of the labor union except that to the extent such information is within the exclusive possession of the labor union and such labor union refuses to furnish such information to the contractor, the contractor shall so certify to the State highway department and shall set forth what efforts have been made to obtain such information.
d. In the event the union is unable to provide the contractor with a reasonable flow of minority and women referrals within the time limit set forth in the collective bargaining agreement, the contractor will, through independent recruitment efforts, fill the employment vacancies without regard to race, color, religion, sex, or national origin; making full efforts to obtain qualified and/or qualifiable minority group persons and women. (The U.S. Department of Labor has held that it shall be no excuse that the union with which the contractor has a collective bargaining agreement providing for exclusive referral failed to refer minority employees.) In the event the union referral practice prevents thecontractor from meeting the obligations pursuant to Executive Order 11246, as amended, and these special provisions, such contractor shall immediately notify the State highway agency.

9. Subcontracting.
a. The contractor will use his best efforts to solicit bids from and to utilize minority group subcontractors or subcontractors with meaningful minority group and female representation among their employees. Contractors shall obtain lists of minority-owned construction firms from State highway agency personnel.
b. The contractor will use his best efforts to ensure subcontractor compliance with their equal employment opportunity obligations.

10. Records and Reports:
a. The contractor shall keep such records as necessary to determine compliance with the contractor's equal employment opportunity obligations. The records kept by the contractor will be designed to indicate:
(1) The number of minority and non minority group members and women employed in each work classification on the project.
(2) The progress and efforts being made in cooperation with unions to increase employment opportunities for minorities and women (applicable only to contractor's who rely in whole or in part on unions as a source of their work force),
(3) The progress and efforts being made in locating, hiring, training, qualifying, and upgrading minority and female employees, and
(4) The progress and efforts being made in securing the services of minority group subcontractors with meaningful minority and female representation among their employees.
b. All such records must be retained for a period of three years following completion of the contract work and shall be available at reasonable times and places for inspection by authorized representatives of the State highway agency and the Federal Highway Administration.
c. The contractors will submit an annual report to the State highway agency each July for the duration of the project, indicating the number of minority, women, and non-minority group employees currently engaged in each work classification required by the contract work. This information is to be reported on Form PR-1391. If on-the-job training is being required by a "Training Special Provision", the contractor will be required to furnish Form FHWA 1409.

STANDARD FEDERAL AND STATE EQUAL EMPLOYMENT OPPORTUNITY CONSTRUCTION CONTRACT SPECIFICATIONS
(41 CFR 60-4.3 and Minnesota Statute §363A.36)

Unless noted, the following apply to both Federal/federally assisted projects and State/state assisted projects. Item 3 applies to Federal/federally assisted projects only

.

1. As used in these specifications:
   a. "Covered area" means the geographical area described in the solicitation from which this contract resulted;
   b. "Director" means Director, Office of Federal Contract Compliance Programs, United States Department of Labor, or any person to whom the Director delegates authority;
   c. "Employer Identification number" means the Federal Social Security number used on the Employer's Quarterly Federal Tax Return, U.S. Treasury Department Form 941.
   d. "Minority" includes:
      (i) Black (all persons having origins in any of the Black African racial groups not of Hispanic origin);
      (ii) Hispanic (all persons of Mexican, Puerto Rican, Cuban, Central or South American or other Spanish Culture or origin, regardless of race);
      (iii) Asian and Pacific Islander (all persons having origins in any of the original peoples of the Far East, Southeast Asia, the Indian Subcontinent, or the Pacific Islands); and
      (iv) American Indian or Alaskan Native (all persons having origins in any of the original peoples of North America and maintaining identifiable tribal affiliations through membership and participation or community identification).

2. Whenever the Contractor, or any Subcontractor at any tier, subcontracts a portion of the work involving any construction trade, it shall physically include in each subcontract in excess of $10,000 ($100,000 for State projects) the provisions of these specifications and the Notice which contains the applicable goals for minority and women participation and which is set forth in the solicitations from which this contract resulted.

3. If the Contractor is participating (pursuant to 41 CFR 60-4, 5) in a Hometown Plan approved by the U.S. Department of Labor in the covered area either individually or through an association, its affirmative action obligations on all work on the Plan area (including goals and timetables) shall be in accordance with that Plan for those trades which have unions participating in the Plan. Contractors must be able to demonstrate their participation in and compliance with the provisions of any such Hometown Plan. Each Contractor or Subcontractor participating in an approved Plan is individually required to comply with its obligations under the EEO clause, and to make a good faith effort to achieve each goal under the Plan in each trade in which it has employees. The overall good faith performance by other Contractors or Subcontractors toward a goal in an approved Plan does not excuse any covered contractor's or subcontractor's failure to take good faith efforts to achieve the Plan goals and timetables.

4. The Contractor shall implement the specific affirmative action standards provided in paragraphs 7(a) to (p) of these specifications (itemized as 4 [a] to [o], Minnesota Rules

STANDARD FEDERAL AND STATE EEO CONSTRUCTION CONTRACT SPECIFICATIONS *(cont.)*

5000.3535). The goals set forth in the solicitation from which this contract resulted are expressed as percentages of the total hours of employment and training of minorities and utilization the Contractor should (shall, for State or state assisted projects) reasonably be able to achieve in each construction trade in which it has employees in the covered area. The Contractor shall make substantially uniform progress toward its goals in each craft during the period specified. Covered construction contractors performing construction work in geographical areas where they do not have a Federal or federally assisted construction contract shall apply the minority and female goals established for the geographical area where the work is being performed. Federal goals are published periodically in the Federal Register in notice form, and such notices may be obtained from any office of Federal Contract Compliance programs or from Federal procurement contracting officers. State goals are published periodically in the State Register in notice form, and may be obtained from the Minnesota Department of Human Rights or the Minnesota Department of Transportation Office of Civil Rights. The Contractor is expected to make substantially uniform progress toward its goals in each craft during the period specified.

5. Neither the provisions of any collective bargaining agreement nor the failure by a union, with whom the Contractor has a collective bargaining agreement, to refer either minorities or women shall excuse the Contractor's obligations under these specifications and Executive Order 11246 and its associated rules and regulations for Federal or federally assisted projects, and Minnesota Statutes, Section §363A.36 of the Minnesota Human Rights Act, or the rules adopted under the Act for State or state assisted projects.

6. In order for the nonworking training hours of apprentices and trainees to be counted in meeting the goals, such apprentices and trainees shall be employed by the Contractor during the training period, and the Contractor must have made a commitment to employ the apprentices and trainees at the completion of their training, subject to the availability of employment opportunities. Trainees shall be trained according to training programs approved by the Minnesota Department of Human Rights, the Minnesota Department of Labor and Industry, or the United States Department of Labor.

7. The Contractor shall take specific affirmative actions to ensure equal employment opportunity. The evaluation of the Contractor's compliance with these specifications must be based upon its effort to achieve maximum results from its actions. The Contractor shall document these efforts fully, and shall implement affirmative action steps at least as extensive as the following (referred to in Minnesota Rules 5000.3535 as items 4(a) to (o):

(a) Ensure and maintain, or for State or state assisted projects make a good faith effort to maintain, a working environment free of harassment, intimidation, and coercion at all sites and in all facilities at which the Contractor's employees are assigned to work. For

STANDARD FEDERAL AND STATE EEO CONSTRUCTION CONTRACT SPECIFICATIONS *(cont.)*

Federal or federally assisted projects, the Contractor, where possible, will assign two or more women to each construction project. The Contractor shall specifically ensure that all foremen, superintendents, and other on-site supervisory personnel are aware of and carry out the Contractor's obligation to maintain such a working environment, with specific attention to minority or women individuals working at such sites or in such facilities.

(b) Establish and maintain a current list of minority and women recruitment sources, provide written notification to minority and women recruitment sources and to community organizations when the Contractor or its unions have employment opportunities available, and maintain a record of the organizations' responses.

(c) Maintain a current file of the names, addresses, and telephone numbers of each minority and woman off-the-street applicant and minority or woman referral from a union, a recruitment source, or community organization and of what action was taken with respect to each individual. If the individual was sent to the union hiring hall for referral and was not referred back to the Contractor by the union or, if referred, not employed by the Contractor, this shall be documented in the file with the reason therefore along with whatever additional actions the Contractor may have taken.

(d) Provide immediate written notification to the commissioner of the Minnesota Department of Human Rights for State or state assisted projects, or the director of the Office of Federal Contract Compliance for Federal or federally assisted projects, when the union, or unions with which the Contractor has a collective bargaining agreement, has not referred to the Contractor a minority person or woman sent by the Contractor, or when the Contractor has other information that the union referral process has impeded the Contractor's efforts to meet its obligations.

(e) Develop on-the-job training opportunities and/or participate in training programs for the areas which expressly include minorities and women, including upgrading programs and apprenticeship and trainee programs relevant to the Contractor's employment needs, especially those programs funded or approved by the State of Minnesota for State or state assisted projects or the Department of Labor, for Federal or federally assisted projects. The Contractor shall provide notice of these programs to the sources compiled under (b).

(f) Disseminate the Contractor's equal employment opportunity policy by providing notice of the policy to unions and training programs and requesting their cooperation in assisting the Contractor in meeting its equal employment opportunity obligations; by including it in any policy manual and collective bargaining agreement; by publicizing it in the company newspaper, annual report, etc.; by specific review of the policy with all management personnel and with all minority and women employees at least once a year; and by posting the company equal employment opportunity policy on bulletin boards accessible to all employees at each location where construction work is performed.

STANDARD FEDERAL AND STATE EEO CONSTRUCTION CONTRACT SPECIFICATIONS *(cont.)*

(g) Review, at least annually, the company's equal employment opportunity policy and affirmative action obligations under these specifications with all employees having any responsibility for hiring, assignment, layoff, termination, or other employment decisions; including specific review of these items with onsite supervisory personnel such as superintendents, general foremen, etc., prior to the first day of construction work at any job site. A written record shall be made and maintained identifying the time and place of these meetings, persons attending, subject matter discussed, and disposition of the subject matter.

(h) Disseminate the Contractor's equal employment opportunity policy externally by including it in any advertising in the news media, specifically including minority and women news media, and providing written notification to and discussing the Contractor's equal employment opportunity policy with other contractors and subcontractors with whom the Contractor does or anticipates doing business.

(i) Direct its recruitment efforts, both oral and written, to minority, women, and community organizations; to schools with minority and women students; and to minority and women recruitment and training organizations serving the Contractor's recruitment area and employment needs. Not later than one month prior to the date for the acceptance of applications for apprenticeship or other training by any recruitment source, the Contractor shall send written notification to organizations, such as the above, describing the openings, screening procedures, and tests to be used in the selection process.

(j) Encourage present minority and women employees to recruit other minority persons and women and, where reasonable, provide after school, summer and vacation employment to minority and women youth, both on the site and in other areas of a Contractor's work force.

(k) Validate all tests and other selection requirements where there is an obligation to do so under 41 CFR Part 60-3. (This requirement applies only to Federal and federally assisted projects.)

(l) Conduct, at least annually, an inventory and evaluation at least of all minority and women personnel for promotional opportunities; and encourage these employees to seek or to prepare for, through appropriate training, such opportunities. (This is Item 4(k) in Minnesota Rules.)

(m) Ensure that seniority practices, job classifications, work assignments, and other personnel practices do not have a discriminatory effect by continually monitoring all personnel and employment-related activities to ensure that the equal employment opportunity policy and the Contractor's obligations under these specifications are being carried out. (This is item 4(l) in Minnesota Rules.)

STANDARD FEDERAL AND STATE EEO CONSTRUCTION CONTRACT SPECIFICATIONS *(cont.)*

(n) Ensure that all facilities and company activities are non segregated except that separate or single-user toilet and necessary changing facilities shall be provided to assure privacy between the sexes. (This is item 4(m) in Minnesota Rules.)

(o) Document and maintain a record of all solicitations or offers for subcontracts from minority and women construction contractors and suppliers, including circulation of solicitations to minority and women contractor associations and other business associations. (This is item 4(n) in Minnesota Rules.)

(p) Conduct a review, at least annually, of all supervisors' adherence to and performance under the Contractor's equal employment opportunity policies and affirmative action obligations. (This is item 4(o) in Minnesota Rules.)

8. Contractors are encouraged to participate in voluntary associations which assist in fulfilling one or more of their affirmative action obligations (7(a) to (p) for Federal or federally assisted projects, and 4(a)-(o) for State or state assisted projects). The efforts of a contractor association, joint contractor-union, contractor-community, or other similar group of which the Contractor is a member and participant, may be asserted as fulfilling any one or more of its obligations under 7(a) to (p) or 4(a) to (o) of these specifications provided that the Contractor actively participates in the group, makes every effort to assure that the group has a positive impact on the employment of minorities and women in the industry, ensures that the concrete benefits of the program are reflected in the Contractor's minority and women work force participation, makes a good faith effort to meet its individual goals and timetables, and can provide access to documentation which demonstrates the effectiveness of actions taken on behalf of the Contractor. The obligation to comply, however, is the Contractor's and failure of such a group to fulfill an obligation shall not be defense for the Contractor's noncompliance.

9. A single goal for minorities and a separate single goal for women have been established. The Contractor however, is required to provide equal employment opportunity and to take affirmative action for all minority groups both male and female, and all women both minority and non-minority. Consequently, the Contractor may be in violation of the Executive Order for Federal or federally assisted projects, or Minnesota Rules for State or state assisted projects, if a particular group is employed in a substantially disparate manner (for example, even though the Contractor has achieved its goals for women generally, the Contractor may be in violation of the Executive Order or Minnesota Rules part 5000.3520 if a specific minority group is under-utilized).

10. The Contractor shall not use the goals and timetables or affirmative action standards to discriminate against any person because of race, color, creed, religion, sex, or national origin. Minnesota Statutes §363A.36, part 5000.3535 (Subp. 7) also prohibits discrimination with regard to marital status, status with regard to public assistance, disability, age, or sexual orientation.

STANDARD FEDERAL AND STATE EEO CONSTRUCTION CONTRACT SPECIFICATIONS *(cont.)*

11. The Contractor shall not enter into any subcontract with any person or firm debarred from government contracts under the federal Executive Order 11246 or a local human rights ordinance, or whose certificate of compliance has been suspended or revoked pursuant to Minnesota Statutes, Section §363A.36.

12. The Contractor shall carry out such sanctions for violation of these specifications and of the equal opportunity clause, including suspension, termination, and cancellation of existing contracts as may be imposed or ordered pursuant to Minnesota Statutes, Section §363A.36, and its implementing rules for State or state assisted projects, or Executive Order 11246, as amended, and its implementing regulations, by the Office of Federal Contract Compliance Programs for Federal or federally assisted projects. Any contractor who fails to carry out such sanctions shall be in violation of these specifications and Minnesota Statutes, Section §363A.36, or Executive Order 11246 as amended.

13. The Contractor, in fulfilling its obligations under these specifications, shall implement specific affirmative action steps, at least as extensive as those standards prescribed in paragraph 7 of these specifications (paragraph 4 in Minnesota Rules 5000.3535), so as to achieve maximum results from its efforts to ensure equal employment opportunity. If the Contractor fails to comply with the requirements of these Specifications or Minnesota Statutes, Section §363A.36 and its implementing rules, or Executive Order 11246 and its regulations, the commissioner or the director shall proceed in accordance with Minnesota Rules part 5000.3570 for State or state assisted projects, or 41 CFR 60-4.8 for Federal or federally assisted projects.

14. The Contractor shall designate a responsible official to monitor all employment-related activity to ensure that the company equal employment opportunity policy is being carried out, to submit reports relating to the provisions hereof as may be required by the Minnesota Department of Human Rights or the Government, and to keep records. Records shall at least include for each employee the name, address, telephone numbers, construction trade, union affiliation if any, employee identification number when assigned, social security number, race, sex, status (for example, mechanic, apprentice trainee, helper, or laborer), dates of changes in status, hours worked per week in the indicated trade, rate of pay, and locations at which the work was performed. Records shall be maintained in an easily understandable and retrievable form; however, to the degree that existing records satisfy this requirement, contractors shall not be required to maintain separate records.

15. Nothing provided in this part shall be construed as a limitation upon the application of other state or federal laws which establish different standards of compliance or upon the application of requirements for the hiring of local or other area residents.

EQUAL OPPORTUNITY CLAUSE

(41 CFR Part 60-1.4 b, 7-1-96 Edition)

The applicant hereby agrees that it will incorporate or cause to be incorporated into any contract for construction work, or modification thereof, as defined in the regulations of the Secretary of Labor at 41 CFR Chapter 60, which is paid for in whole or in part with funds obtained from the Federal Government or borrowed on the credit of the Federal Government pursuant to a grant, contract, loan, insurance, or guarantee, the following equal opportunity clause:

During the performance of this contract, the Contractor agrees as follows:

1. The Contractor will not discriminate against any employee or applicant for employment because of race, color, religion, sex, or national origin. The Contractor will take affirmative action to ensure that applicants are employed and that employees are treated during employment without regard to their race, color, religion, sex, or national origin. Such action shall include, but not be limited to, the following: employment, upgrading, demotion or transfer; recruitment or recruitment advertising; layoffs or termination; rates of pay or other forms of compensation; and, selection for training, including apprenticeship. The Contractor agrees to post in conspicuous places, available to employees and applicants for employment, notices to be provided by the State Highway Agency (SHA) setting forth the provisions of this nondiscrimination clause.
2. The Contractor will, in all solicitations or advertisements for employees placed by or on behalf of the contractor, state that all qualified applicants will receive consideration for employment without regard to race, color, religion, sex, or national origin.
3. The Contractor will send to each labor union or representative of workers with which the Contractor has a collective bargaining agreement or other contract or understanding, a notice to be provided advising the said labor union or workers' representative of the Contractor's commitments under this section, and shall post copies of the notice in conspicuous places available to employees and applicants for employment.
4. The Contractor will comply with all provisions of Executive Order 11246, Equal Employment Opportunity, dated September 24, 1965, and of the rules, regulations (41 CFR Part 60), and relevant orders of the Secretary of Labor.
5. The Contractor will furnish all information and reports required by Executive Order 11246 and by rules, regulations, and orders of the Secretary of Labor, pursuant thereto, and will permit access to its books, records, and accounts by the Federal Highway Administration (FHWA) and the Secretary of Labor for purposes of investigation to ascertain compliance with such rules, regulations, and orders.
6. In the event of the Contractor's noncompliance with the nondiscrimination clauses of this contract, or with any of such rules, regulations, or orders, this contract may be canceled, terminated, or suspended in whole or in part, and the Contractor may be declared ineligible for further Government contracts or federally-assisted construction contracts in accordance with procedures authorized in Executive Order 11246 of September 24, 1965, and such other sanctions as may be imposed and remedies invoked as provided in Executive Order 11246 or by rule, regulation, or order of the Secretary of Labor, or as otherwise provided by law.
7. The Contractor will include the portion of the sentence immediately preceding paragraph (1) and the provisions of paragraph (1) through (7) in every subcontract or purchase order so that such provisions will be binding upon each subcontractor or vendor, unless exempted by rules, regulations, or orders of the Secretary of Labor issued pursuant to Section 204 of Executive Order 11246. The Contractor will take such action with respect to any subcontract or purchase order as the Secretary of Labor, SHA, or the Federal Highway Administration (FHWA) may direct as a means of enforcing such provisions, including sanctions for noncompliance. In the event a contractor becomes a party to litigation by a subcontractor or vendor as a result of such direction, the contractor may request the SHA to enter into such litigation to protect the interest of the State. In addition, the Contractor may request the United States to enter into such litigation to protect the interests of the United States.

The applicant further agrees that it will be bound by the above equal opportunity clause with respect to its own employment practices when it participates in federally assisted construction work: *Provided*, that if the applicant so participating is a State or local government, the above equal opportunity clause is not applicable to any agency, instrumentality or subdivision of such government which does not participate in work on or under the contract.

The applicant agrees that it will assist and cooperate actively with the administering agency and the Secretary of Labor in obtaining the compliance of contractors and subcontractors with the equal opportunity clause and the rules, regulations, and relevant orders of the Secretary of Labor, that it will furnish the administering agency and the Secretary of Labor such information as they may require for the supervision of such compliance, and that it will otherwise assist the administering agency in the discharge of the agency's primary responsibility for securing compliance.

The applicant further agrees that it will refrain from entering into any contract or contract modification subject to Executive Order 11246 of September 24, 1965, with a contractor debarred from, or who has not demonstrated eligibility for, Government contracts and federally assisted construction contracts pursuant to the Executive order and will carry out such sanctions and penalties for violation of the equal opportunity clause as may be imposed upon contractors and subcontractors by the administering agency or the Secretary of Labor pursuant to Part II, Subpart D of the Executive order. In addition, the applicant agrees that if it fails or refuses to comply with these undertakings, the administering agency may take any or all of the following actions: Cancel, terminate, or suspend in whole or in part this grant (contract, loan, insurance, guarantee); refrain from extending any further assistance to the applicant under the program with respect to which the failure or refund occurred until satisfactory assurance of future compliance has been received from such applicant; and refer the case to the Department of Justice for appropriate legal proceedings.

Minority and Women Employment Goals

County	Federal Goals		State Goals	
	Minority Goal	Women Goal	Minority Goal	Women Goal
Aitkin	2.2%	6.9%	5%	6%
Anoka	2.9%	6.9%	22%	6%
Becker	0.7%	6.9%	6%	6%
Beltrami	2.0%	6.9%	6%	6%
Benton	0.5%	6.9%	3%	6%
Big Stone	2.2%	6.9%	4%	6%
Blue Earth	2.2%	6.9%	4%	6%
Brown	2.2%	6.9%	4%	6%
Carlton	1.2%	6.9%	5%	6%
Carver	2.9%	6.9%	22%	6%
Cass	2.2%	6.9%	6%	6%
Chippewa	2.2%	6.9%	4%	6%
Chisago	2.9%	6.9%	3%	6%
Clay	0.7%	6.9%	6%	6%
Clearwater	2.0%	6.9%	6%	6%
Cook	1.2%	6.9%	5%	6%
Cottonwood	0.8%	6.9%	4%	6%
Crow Wing	2.2%	6.9%	6%	6%
Dakota	2.9%	6.9%	22%	6%
Dodge	0.9%	6.9%	4%	6%
Douglas	2.2%	6.9%	6%	6%
Faribault	2.2%	6.9%	4%	6%
Fillmore	0.9%	6.9%	4%	6%
Freeborn	0.9%	6.9%	4%	6%
Goodhue	2.2%	6.9%	4%	6%
Grant	2.2%	6.9%	6%	6%
Hennepin	2.9%	6.9%	32%	6%
Houston	0.6%	6.9%	4%	6%
Hubbard	2.0%	6.9%	6%	6%
Isanti	2.2%	6.9%	3%	6%
Itasca	1.2%	6.9%	5%	6%
Jackson	0.8%	6.9%	4%	6%
Kanabec	2.2%	6.9%	3%	6%
Kandiyohi	2.2%	6.9%	3%	6%
Kittson	2.0%	6.9%	6%	6%
Koochiching	1.2%	6.9%	5%	6%
Lac Qui Parle	2.2%	6.9%	4%	6%
Lake	1.2%	6.9%	5%	6%
Lake of the Woods	2.0%	6.9%	6%	6%
Le Sueur	2.2%	6.9%	4%	6%
Lincoln	0.8%	6.9%	4%	6%
Lyon	0.8%	6.9%	4%	6%

County	Federal Goals		State Goals	
	Minority Goal	Women Goal	Minority Goal	Women Goal
Mahnomen	2.0%	6.9%	6%	6%
Marshall	2.0%	6.9%	6%	6%
Martin	2.2%	6.9%	4%	6%
McLeod	2.2%	6.9%	3%	6%
Meeker	2.2%	6.9%	3%	6%
Mille Lacs	2.2%	6.9%	3%	6%
Morrison	2.2%	6.9%	6%	6%
Mower	0.9%	6.9%	4%	6%
Murray	0.8%	6.9%	4%	6%
Nicollet	2.2%	6.9%	4%	6%
Nobles	0.8%	6.9%	4%	6%
Norman	2.0%	6.9%	6%	6%
Olmsted	1.4%	6.9%	4%	6%
Otter Tail	2.2%	6.9%	6%	6%
Pennington	2.0%	6.9%	6%	6%
Pine	2.2%	6.9%	3%	6%
Pipestone	0.8%	6.9%	4%	6%
Polk	1.2%	6.9%	6%	6%
Pope	2.2%	6.9%	6%	6%
Ramsey	2.9%	6.9%	32%	6%
Red Lake	2.0%	6.9%	6%	6%
Redwood	0.8%	6.9%	4%	6%
Renville	2.2%	6.9%	3%	6%
Rice	2.2%	6.9%	4%	6%
Rock	0.8%	6.9%	4%	6%
Roseau	2.0%	6.9%	6%	6%
Scott	2.9%	6.9%	22%	6%
Sherburne	0.5%	6.9%	3%	6%
Sibley	2.2%	6.9%	4%	6%
St. Louis	1.0%	6.9%	5%	6%
Stearns	0.5%	6.9%	3%	6%
Steele	0.9%	6.9%	4%	6%
Stevens	2.2%	6.9%	6%	6%
Swift	2.2%	6.9%	4%	6%
Todd	2.2%	6.9%	6%	6%
Traverse	2.2%	6.9%	6%	6%
Wabasha	0.9%	6.9%	4%	6%
Wadena	2.2%	6.9%	6%	6%
Waseca	2.2%	6.9%	4%	6%
Washington	2.9%	6.9%	22%	6%
Watonwan	2.2%	6.9%	4%	6%
Wilkin	0.7%	6.9%	6%	6%
Winona	0.6%	6.9%	4%	6%
Wright	2.9%	6.9%	3%	6%
Yellow Medicine	2.2%	6.9%	4%	6%

Minnesota Department of Transportation Office of Civil Rights Contractor Employment Data	**1. Contractor Name and Address:** **Phone:** _____

	2. Employment Data a) Name: Last Name, First Name, MI	**b) Social Security #**	c) New Hire (Y or N)	d) Ethnicity	e) Gender (M or F)	f) Trade/Foreman, Supervisors, Managers	g) Level (A, J, or T)
1.							
2.							
3.							
4.							
5.							
6.							
7.							
8.							
9.							
10.							
11.							
12.							
13.							
14.							
15.							
16.							
17.							
18.							
19.							
20.							
21.							
22.							
23.							
24.							
25.							
26.							
27.							

EEO-12 Rev. 5/09

INSTRUCTIONS FOR EEO-12
CONTRACTOR EMPLOYMENT DATA

This form should be submitted at the Pre-Con to the Project Engineer prior to the start of your first MnDOT construction project for the calendar year (Prime and Subs)

1. Contractor Name and Address self-explanatory.

2. Employment Data information will coincide with your employment records.

   2a. Name should be listed First Name, Middle Initial, and Last Name. This will enable MnDOT EEO staff to readily identify individuals on all projects.

   2b. Social Security Number self-explanatory.

   2c. New Hire is to be indicated with a "Y" for Yes or an "N" for No. "New Hire" is an employee who has not worked for you in any capacity or on any other project within the current calendar year.

   2d. Ethnicity can be indicated by Black (B), Hispanic (H), American Indian/Alaskan Native (AI), Asian/Pacific Islander (AP), or White (W).

   2e. Gender is to be indicated with an "M" for Males or an "F" for Females.

   2f. Trade/Foreman, Supervisors, Managers self-explanatory. List trade that applies unless the employee fits one of the other three categories.

   2g. Level "A" is for an Apprentice, "J" is for a Journey Worker, and "T" is for a MnDOT approved Trainee.

If you have questions about filling out this form, contact the Office of Civil Rights at (651) 366-3073.
(Please make copies as you need them.)

This information can be submitted electronically via the web, through MnDOT's Work force Information Tracking Initiative (WITI) Program. To open a free account to gain access to WITI or to find out more about this possibility please contact MnDOT's Office of Civil Rights at (651) 366-3015.

EEO-12 Rev. 05/09

Minnesota Department of Transportation **Office of Civil Rights** **Monthly Employment Compliance Report** **EEO-13**	**1. SP** ☐ **SAP** ☐	**3. Contractor Name:**	**4. Prime** ☐ **Subcontractor** ☐
	(Check one) **SP#**	**Federal Tax ID:**	(check one)
	County or City	Street Address:	5. Dollar Amount of Contract:
	2. Reporting Period to _____	City, State Zip	6. Percent of Completion:

	7. Employment Data **a) Name: Last, First Middle Initial**	**b)** **Social Security #**	**c)** **New Hire** **(Y or N)**	**d)** **Ethnicity**	**e) Gender** **M or F)**	**Trade/Foreman, Supervisors, Managers**	**g)** **Level** **(A, J or T)**	**h) Hours Worked This Period**
1.								
2.								
3.								
4.								
5.								
6.								
7.								
8.								
9.								
10.								
11.								
12.								
13.								
14.								
15.								
16.								
17.								
18.								
19.								
20.								

8. Contract Goals	**9. Prepared by:** (Signature)	**10. Reviewed by:** (Signature)
MINNESOTA GOALS **%OBTAINED**		
% Minority %	Print Name:	Print Name:
	Title:	Title:
% Women %	Date:	Date:
	Phone: Fax:	Phone: Fax:

EEO-13 Rev. 05/09

INSTRUCTIONS FOR EEO-13

MONTHLY EMPLOYMENT COMPLIANCE REPORT

1.-5. Self-explanatory – **S**tate **P**roject #, county project is located in, are you a prime or sub, and contract value.

6. Percent of Completion is the estimated percentage of work completed including this reporting period.

7. Employment Data information will coincide with your employment records. All professional, supervisory and managerial hours actually worked on the project site must be included, whether or not they appear on the certified payroll.

7a. Name should be listed Last Name, First Name, and Middle Initial. This will enable MnDOT EEO staff to readily identify individuals on all projects.
7b. Social Security Number self-explanatory.
7c. New Hire is to be indicated with a "Y" for Yes or an "N" for No. "New Hire" is an employee who has not worked for you in any capacity or on any other project within the current calendar year.
7d. Ethnicity can be indicated by Black (B), Hispanic (H), American Indian/Alaskan Native (AI), Asian/Pacific Islander (AP), or White (W).
7e. Gender is to be indicated with an "M" for Males or an "F" for Females.
7f. Trade/Foreman, Supervisors, Managers list the trade that applies unless the employee fits one of the other three categories.
7g. Level "A" is for an Apprentice, "J" is for a Journey Worker, and "T" is for a MnDOT approved Trainee.
7h. Hours Worked for This Period will be all hours worked by the individual, for each trade, during the specified reporting period.

8. Contract Goals are the percent of total project hours to be worked by minority and women employees. The goals are determined by the geographic location and source of funding for the project. Projects in excess of $100,000 with any State funding must meet the State Employment Goals. Projects in excess of $10,000 with any Federal funding must meet the Federal Employment Goals. (See chart on EEO Pages 16-17.) Minority and women employee hours shall be distributed evenly throughout the length of the project and in every trade and craft that performs work on the project.

% Obtained is the percent of the total project hours worked by minority and women employees, up to and including this reporting period.

9. Prepared by Contractor Designee is the signature of the prime or subcontractor's EEO officer/designee.

10. Reviewed by Project Engineer is the signature of the MnDOT staff monitoring the project.

The Prime Contractor will submit EEO-13 forms for its workforce and all subcontractors to the MnDOT Project Engineer by the 15th day of the month following the month when work was performed. If you have questions about filling out this form, contact the Office of Civil Rights at (651) 366-3073.
(Please make copies as you need them.)

This information can be submitted electronically via the web, through MnDOT's Workforce Information Tracking Initiative (WITI) Program. To open a free account to gain access to WITI or to find out more about this possibility please contact MnDOT's Office of Civil Rights at (651) 366-3321.

EEO-13 Rev. 05/09

EEO COMPLIANCE REVIEW REPORT

Total Company Workforce

(For 12 Month Period Preceding July 30th of the previous year)

Name and Address of Contractor

_____

_____

_____

Name and Title of Corporate Officer _____

Name of EEO Officer _____

Job Categories	Total Employees		Total Minorities		Blacks		Asian/ Pacific Is.		American Indian		Hispanic		On-the-Job Trainees	
	M	F	M	F	M	F	M	F	M	F	M	F	M	F
Officials (Managers)														
Supervisors														
Foremen/Women														
Clerical														
Equipment Operators														
Mechanics														
Truck Drivers														
Iron Workers														
Carpenters														
Cement Masons														
Electricians														
Pipefitters & Plumbers														
Painters														
Laborers														
Misc. Trades														
Total														
On-the-Job Trainees														

EEO-8 Rev. 07/07

NOTICE TO BIDDERS

Particular note should be made in regard to the clarity of numerals (figures) and to the procedure for alterations and the required certificate as directed by Section 1301.

The following abbreviations may be used in item description and unit of measure in the Schedule of Prices.

A	Arch
A-S	Antiseepage
AB	Asbestos Bonded
ACT	Actuated
AGG	Aggregate
ALUM	Aluminum
ASB	Asbestos
ASPH	Asphaltic
ASSY	Assemblies
B+B	Balled & Burlapped
BC	Bituminous Coated
BIT	Bituminous
BLDG	Building
BR	Bridge
CAL	Caliper
CB	Catch Basin
CEM	Cement
C and G	Curb and Gutter
CI	Cast Iron
C-I-P	Cast-in-Place
CL	Class
COMM	Commercial
CONC	Concrete
COND	Conductor
CONN	Connection
CONST	Construct
CONT	Continuously
CP	Cattle Pass
CTD	Coated
CU FT	Cubic Feet
CU YD	Cubic Yard
CULV	Culvert
CWT	Hundred Weight
DES	Design
DBL	Double
DI	Drop Inlet
DIAM	Diameter
DRWY	Driveway
EXC	Excavation
EXP	Expansion
FAB	Fabric
FE	Fence
FERT	Fertilizer
F+I	Furnish & Install
FOUND	Foundation
FT LG	Feet Long
FURN	Furnish
GA	Gauge
GRAN	Granular
HI	High
INP	In Place
INST	Install
JA	Jacked
LIN FT	Linear Feet
LG	Long
MAINT	Maintenance
MATL	Material
MGM	1000 Board Feet
MET	Metal
MOD	Modification
MPA	Metal Pipe Arch
MTD	Mounted
NON MET	Non Metallic
NON PERF	Non-Perforated
NON REINF	Non-Reinforced
OH	Overhead
P-A	Pipe-Arch
PAVT	Pavement
PERF	Perofrated
PL	Plate
PNEUM	Pneumatic
PREC	Precast
PREST	Prestressed
PVC	Poly Vinyl Chloride
RCPA	Reinforced Concrete Pipe Arch
REINF	Reinforced
RELO	Relocation
RESTOR	Restoration
RMC	Rigid Metallic Conduit
RNMC	Rigid Non Metallic Conduit
RDWY	Roadway
S-G	Sand & Gravel
SIG	Signal
SPE	Special
SQ FT	Square Feet
SQ YD	Square Yard
STA	Station
STD	Standard
STL	Steel
STKPL	Stockpile
STR	Strength
STRUCT	Structural
SPPA	Structural Plate Pipe Arch
SYS	System
T	Traffic
TBR	Timber
TEMP	Temporary
THERMO	Thermoplastic
TRTD	Treated
UNDERGRD	Underground
UNTRTD	Untreated
VAR	Variable
VM	Vehicular Measure
WEAR	Wearing

STATE OF MINNESOTA
DEPARTMENT OF TRANSPORTATION

SCHEDULE OF PRICES PAGE NO. 1

JOB NUMBER : 140147 LOW SP: 2710-2440B ROUTE: TH 65

BIDDER MUST ENTER ALL UNIT PRICES, MAKE ALL EXTENSIONS AND TOTAL THE BID.

LINE NO	ITEM DESCRIPTION	APPROX. QUANTITY AND UNITS	UNIT PRICE DOLLARS	UNIT PRICE CTS	BID AMOUNT DOLLARS	BID AMOUNT CTS
	SECTION 0001					
0010	2021.501/00010 MOBILIZATION	LUMP SUM				
0020	2031.501/00040 FIELD OFFICE TYPE D	1.000 EACH				
0030	2104.601/00086 REMOVE MISCELLANEOUS DEBRIS	LUMP SUM				
0040	2401.541/00020 REINFORCEMENT BARS (STAINLESS STEEL)	6670.000 POUND				
0050	2433.601/00301 RECONSTRUCT FOUNDATION TYPE 1	LUMP SUM				
0060	2433.601/08010 SUPPLEMENTAL DESCRIPTION RECONSTRUCTION FOUNDATION TYPE 2	LUMP SUM				
0070	2433.602/00145 GROUTED REINFORCEMENT BARS (STAINLESS STEEL)	654.000 EACH				
0080	2433.607/00001 CEMENT GROUT	3.000 CU YD				
0090	2433.618/00110 CONCRETE SURFACE REPAIR	200.000 SQ FT				
0100	2433.618/00111 CONCRETE SURFACE REPAIR TYPE 1	3647.000 SQ FT				
0110	2433.618/00112 CONCRETE SURFACE REPAIR TYPE 2	365.000 SQ FT				
0120	2563.601/00010 TRAFFIC CONTROL	LUMP SUM				
	SECTION 0001 TOTAL					

JOB NUMBER : 140147 LOW SP: 2710-2440B ROUTE: TH 65

BIDDER MUST ENTER ALL UNIT PRICES, MAKE ALL EXTENSIONS AND TOTAL THE BID.

LINE NO	ITEM DESCRIPTION	APPROX. QUANTITY AND UNITS	UNIT PRICE DOLLARS	UNIT PRICE CTS	BID AMOUNT DOLLARS	BID AMOUNT CTS
	ADDENDUM ITEMS					
A						
B						
C						
D						
E						
F						
G						
H						
I						
J						
K						
L						
M						
	TOTAL BID					

Form 21126D (SF Rev. 1-2010)

State Project No.: S.P. 2710-2440B (T.H. 65)

GRAND TOTAL $ _____

The undersigned hereby acknowledges that all requirements included in the hard copy proposal, addenda, amendments, plans, standard specifications, and supplemental specifications are a part of this bid and contract.

Signed: _____

PROPOSAL GUARANTY required by 1208 of the Specifications: "A (certified check) (bond), prepared as required by 1208 of the Specifications and payable to the Commissioner of Transportation, in an amount equal to at least 5% of the total amount of the bid is submitted herewith as a proposal guaranty.

TARGETED GROUP BUSINESS CERTIFICATION: Our firm will meet a minimum goal of _____% of this contract to Targeted Group Businesses. A bidder who fails to indicate a specific goal above must fulfill the total goals indicated in this proposal.

VETERAN OWNED BUSINESS CERTIFICATION: Our firm will meet a minimum goal of _____% of this contract to Veteran Owned Businesses. A bidder who fails to indicate a specific goal above must fulfill the total goals indicated in this proposal.

NON-COLLUSION AFFIDAVIT: A Non-Collusion Affidavit is found in this proposal which must be signed by each bidder.

RECEIPT OF ADDENDA as required by 1210 of the Specifications:
The undersigned hereby acknowledges receipt of and has considered:

Addendum No. _____ Dated: _____ Addendum No.: _____ Dated: _____

Addendum No. _____ Dated: _____ Addendum No.: _____ Dated: _____

Signed: _____

EXECUTION OF PROPOSAL as required by 1206 of the Specifications:

This proposal dated the _____ day of _____ , _____

Signed: _____ ,P.O. Address _____ as an individual.

Signed: _____ ,P.O. Address _____ as an individual.

doing business under the name and style of _____

Signed: _____ ,for _____ a partnership.

NAME BUSINESS ADDRESS

_____

_____

_____

Signed: _____ , for _____ , a corporation

incorporated under the laws of the State of _____

Name of President _____ Business Address_____

Name of Vice-President _____ Business Address_____

Name of Secretary_____ Business Address_____

Name of Treasurer _____ Business Address _____

(NOTE: Signatures shall comply with 1206 of the Specifications.)

ATTACHMENT
CM 32-34 March 26, 1969

THE FOLLOWING CERTIFICATION WITH REGARD TO THE PERFORMANCE OF PREVIOUS CONTRACTS OR SUBCONTRACTS SUBJECT TO THE EQUAL OPPORTUNITY CLAUSE AND THE FILING OF REQUIRED REPORTS SHALL BE EXECUTED BY THE BIDDER.

The bidder hereby certifies the he/she has _____, has not _____, participated in a previous contract or subcontract subject to the equal opportunity clause, as required by Executive Orders 10925, 11114 or 11246, and that he/she has _____, has not _____, filed with the Joint Reporting Committee, the Director of the Office of Federal Contract Compliance, a Federal Government contracting or administering agency, or the former President's Committee on Equal Employment Opportunity, all reports due under the applicable filing requirements.

_____
(Company)

By: _____

_____
(Title)

Date: _____

Note: The above certification is required by the Equal Employment Opportunity Regulations of the Secretary of Labor (41CFR 60-1.7(b)(1)), and must be submitted by bidders and proposed subcontractors only in connection with contracts and subcontracts which are exempt from the equal opportunity clause. Contracts and subcontracts which are exempt from the equal opportunity clause are set forth in 41 CFR 60-1.5. (Generally only contracts or subcontracts of $10,000 or under are exempt.)

Currently, Standard Form 100 (EEO-1) is the only report required by Executive Orders or their implementing regulations.

Proposed prime contractors and subcontractors who have participated in a previous contract or subcontract subject to the Executive Orders and have not filed the required reports should note that 41 CFR 60-1.7(b)(1) prevents the award of contracts and subcontracts unless such contractor submits a report covering the delinquent period or such other period specified by the Federal Highway Administration or by the Director, Office of Federal Contract Compliance, U.S. Department of Labor.

NON-COLLUSION AFFIDAVIT

The following Non-Collusion Affidavit shall be executed by the bidder:

State Project No. _____

I, _____, do state under penalty of perjury under
(name of person signing this affidavit)

28 U.S.C. 1746 of the laws of the United States:

(1) that I am the authorized representative of:

_____
(name of person, partnership or corporation submitting this proposal)

and that I have the authority to make this affidavit for and on behalf of said bidder;

(2) that, in connection with this proposal, the said bidder has not either directly or indirectly entered into any agreement, participated in any collusion or otherwise taken any action in restraint of free competitive bidding;

(3) that, to the best of my knowledge and belief, the contents of this proposal have not been communicated by the bidder or by any of his/her employees or agents to any person who is not an employee or agent of the bidder or of the surety on any bond furnished with the proposal and will not be communicated to any person who is not an employee or agent of the bidder or of said surety prior to the official opening of the proposal, and

(4) that I have fully informed myself regarding the accuracy of the statements made in this affidavit.

Signed: _____
(bidder or his authorized representative)

Letting Date:_____
State Project No.:_____
Bond No.:_____

STATE OF MINNESOTA
DEPARTMENT OF TRANSPORTATION

PROPOSAL BOND

KNOW ALL MEN BY THESE PRESENTS, that We, _____ _____, as Principal, and _____, _____, as Surety, are jointly and severally held and firmly bound unto the State of Minnesota, Department of Transportation, as Obligee, in the sum of five percent (5%) of the total amount of the proposal price.

The CONDITION OF THIS OBLIGATION IS SUCH, that if the Principal shall be awarded a contract, upon the accompanying proposal dated _____ for the performance of STATE PROJECT _____ _____ and shall, within the time stated in the proposal, enter into a contract for the performance of the work and give bond as required by law, then this obligation shall be void; otherwise, the Principal and Surety shall pay unto the Obligee the amount of this bond, not as a penalty, but as liquidated damages sustained by the Obligee as the result of such failure on the part of the Principal to execute said contract and bond.

SIGNATURES

Date_____, 20_____

_____
(Name of Contractor/Principal)

By:_____
(Officer)

By:_____
(Officer)

_____
(Name of Surety)

By:_____
(Attorney-in-Fact)

(Surety Corporate Seal)

ACKNOWLEDGEMENT IN A REPRESENTATIVE CAPACITY
(Corporation, LLC, Partnership or Other Entity)

STATE OF _____

COUNTY OF _____

This instrument was acknowledged before me on _____ by _____
(date) (name)

and _____ as _____ and _____
(name) (title) (title)

of _____.
(name and designation of party on behalf of whom the instrument was executed)

Notary Signature: _____

Title: Notary

Commission Expiration:_____

(Notary Stamp/Seal)

ACKNOWLEDGEMENT IN AN INDIVIDUAL CAPACITY

STATE OF _____

COUNTY OF _____

This instrument was acknowledged before me on _____ by _____
(date) (name)

and _____ .
(name)

Notary Signature: _____

Title: Notary

Commission Expiration:_____

(Notary Stamp/Seal)

ACKNOWLEDGEMENT OF SURETY

STATE OF _____

COUNTY OF _____

This instrument was acknowledged before me on _____ by _____
(date) (name)

as Attorney-in-Fact of _____.
(name of surety)

Notary Signature: _____

Title: Notary

Commission Expiration:_____

(Notary Stamp/Seal)

NOTICE TO PERSONAL SURETIES: Bond will not be accepted unless accompanied by a sworn financial statement of each of the sureties.

NOTICE TO CORPORATE SURETIES: This bond will not be accepted unless executed by a Minnesota agent, or a duly licensed non-resident-producer, or attorney-in-fact whose name and address must be noted below.

Full Name of Surety Company _____

Home Office Address (Street) _____

City, State and Zip Code _____

Name of Attorney-in-Fact _____

Name of Local Agent and Agency or Non-Resident Producer and Agency _____

Address of Local Agency or Non-Resident Producer Agency (street) _____

City, State and Zip Code _____

==========

Approved and filed _____, 20_____

_____
Commissioner of Transportation
Pursuant to Delegation of Authority

MINNESOTA DEPARTMENT OF TRANSPORTATION

CONSTRUCTION PLAN FOR BRIDGE REPAIR NO. 2440

BRIDGE 2440 LOCATED AT T.H. 65 OVER MISSISSIPPI RIVER AND CITY STREETS
6.0 MILES SOUTH OF JUNCTION OF I-35W AND T.H. 65

STATE FUNDS

BRIDGE NO.	STATE PROJECT NO.	JOB NO.
2440	2710-2440B	T9R548

SCHEDULE OF QUANTITIES

ITEM NO.	ITEM	UNIT	PIER 1	PIER 2	PIER 5	QUANTITY TOTAL
2021.501	MOBILIZATION	LUMP SUM				1
2031.501	FIELD OFFICE TYPE D	EACH				1
2104.601	REMOVE MISCELLANEOUS DEBRIS	LUMP SUM	0.5		0.5	1
2401.541	REINFORCEMENT BARS (STAINLESS STEEL)	POUND	3030	2410	1230	6670
2433.601	RECONSTRUCT FOUNDATION TYPE 1	LUMP SUM	1			1
2433.601	RECONSTRUCTION FOUNDATION TYPE 2	LUMP SUM			1	1
2433.602	GROUTED REINF BARS (STAINLESS STEEL)	EACH	332	220	102	654
2433.607	CEMENT GROUT	CU. YD.			3	3
2433.618	CONCRETE SURFACE REPAIR	SQ. FT.	200			200
2433.618	CONCRETE SURFACE REPAIR TYPE 1	SQ. FT.	2032	1600	15	3647
2433.618	CONCRETE SURFACE REPAIR TYPE 2	SQ. FT.	203	160	2	365
2563.601	TRAFFIC CONTROL	LUMP SUM				1

CONSTRUCTION NOTES:

THE 2014 EDITION OF THE MINNESOTA DEPARTMENT OF TRANSPORTATION "STANDARD SPECIFICATIONS FOR CONSTRUCTION" SHALL GOVERN.

NO CUTTING WILL BE PERMITTED UNTIL THE CUTTING LIMITS HAVE BEEN OUTLINED BY THE CONTRACTOR AND APPROVED BY THE ENGINEER, REMOVAL AND RECONSTRUCTION SHALL CONFORM TO SPEC. 2433.

ALL EXPOSED CUT LINES SHALL BE SAW CUT TO A MINIMUM DEPTH OF 1".

APPROVED BONDING GROUT TO BE APPLIED TO ALL ABOVE WATER CONTACT SURFACES BETWEEN NEW AND INPLACE CONCRETE AT AREAS OF RECONSTRUCTION.

THE BAR SIZES SHOWN IN THIS PLAN ARE IN U.S. CUSTOMARY DESIGNATIONS.

BARS MARKED WITH SUFFIX "S" SHALL BE STAINLESS STEEL IN ACCCORDANCE WITH SPECIAL PROVISIONS.

PLANS OF INPLACE BRIDGE NO. 2440 ARE AVAILABLE AT THE MINNESOTA DEPARTMENT OF TRANSPORTATION.

DIRECTIONS GIVEN IN PLANS (WEST FACE, EAST FACE, ETC.) ARE GIVEN BASED ON T.H. 65 RUNNING A NORTH/SOUTH ROUTE.

LIST OF SHEETS

SHEET NO.	DESCRIPTION
1	TITLE SHEET
2	GENERAL PLAN AND ELEVATION
3	PIER 1 & 2 GEOMETRY
4	PIER 1 REMOVALS
5	PIER 1 REPAIR DETAILS
6	PIER 2 REMOVALS
7	PIER 2 REPAIR DETAILS
8	PIER 5 INPLACE CONDITIONS (1 OF 3)
9	PIER 5 INPLACE CONDITIONS (2 OF 3)
10	PIER 5 INPLACE CONDITIONS (3 OF 3)
11	PIER 5 FOOTING REPAIR (1 OF 2)
12	PIER 5 FOOTING REPAIR (2 OF 2)
13	BORING LOGS 1
14	BORING LOGS 2
15	BORING LOGS 3
16	AS-BUILT BRIDGE DATA
17	SWPPP AND WATER RESOURCES
18	SWPPP AND WATER RESOURCES
19	SWPPP AND WATER RESOURCES

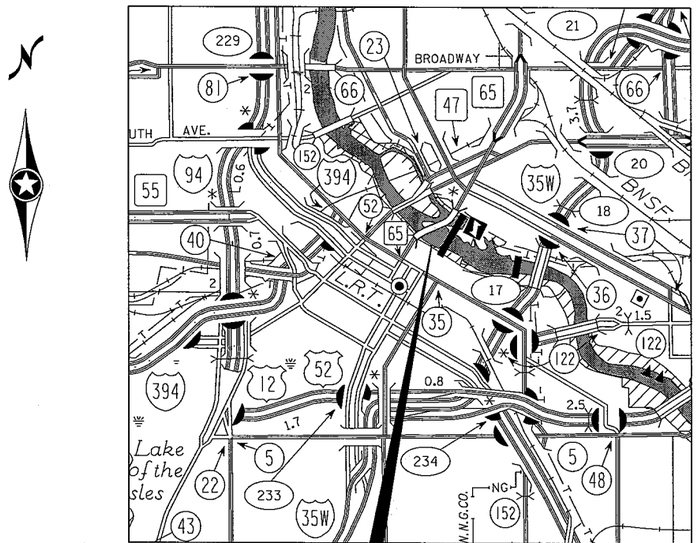

BRIDGE 2440

RECOMMENDED FOR APPROVAL: Beth Neuenburg — METRO AREA WATER RESOURCES ENGINEER — DATE 5-27-2014

APPROVED: Nancy J. Daubenberger — STATE BRIDGE ENGINEER — DATE 5/27/2014

I HEREBY CERTIFY THAT THIS PLAN WAS PREPARED BY ME OR UNDER MY DIRECT SUPERVISION AND THAT I AM A DULY LICENSED PROFESSIONAL ENGINEER UNDER THE LAWS OF THE STATE OF MINNESOTA.

PRINT NAME: JACOB Z. BRONDER LICENSE # 41848

DATE: 5/23/14 SIGNATURE: Jacob Bronder

HDR Engineering, Inc.

I HEREBY CERTIFY THAT THE FINAL FIELD REVISIONS, IF ANY, WERE PREPARED BY ME OR UNDER MY DIRECT SUPERVISION AND THAT I AM A DULY LICENSED PROFESSIONAL ENGINEER UNDER THE LAWS OF THE STATE OF MINNESOTA.

PRINT NAME: LICENSE #

DATE: SIGNATURE:

STATE PROJ. NO. 2710-2440B (T.H. 65)

SHEET NO. 1 OF 19 SHEETS

4-22-14 W

2:51:52 PM
5/23/2014
pw:\\PWAPPOMA001:NorthCentral_Omaha\Documents\007569\CON0085500\0000000002230 61\13.00_CAD\Plan Sheets\1000

STATE FUNDS

DESIGN DATA

2012 AND CURRENT INTERIM A.A.S.H.T.O. DESIGN SPECIFICATIONS.
LOAD AND RESISTANCE FACTOR DESIGN METHOD
MATERIAL DESIGN PROPERTIES
REINFORCED CONCRETE:
f'c = 4000 p.s.i. n = 8
fy = 60000 p.s.i. FOR REINFORCEMENT

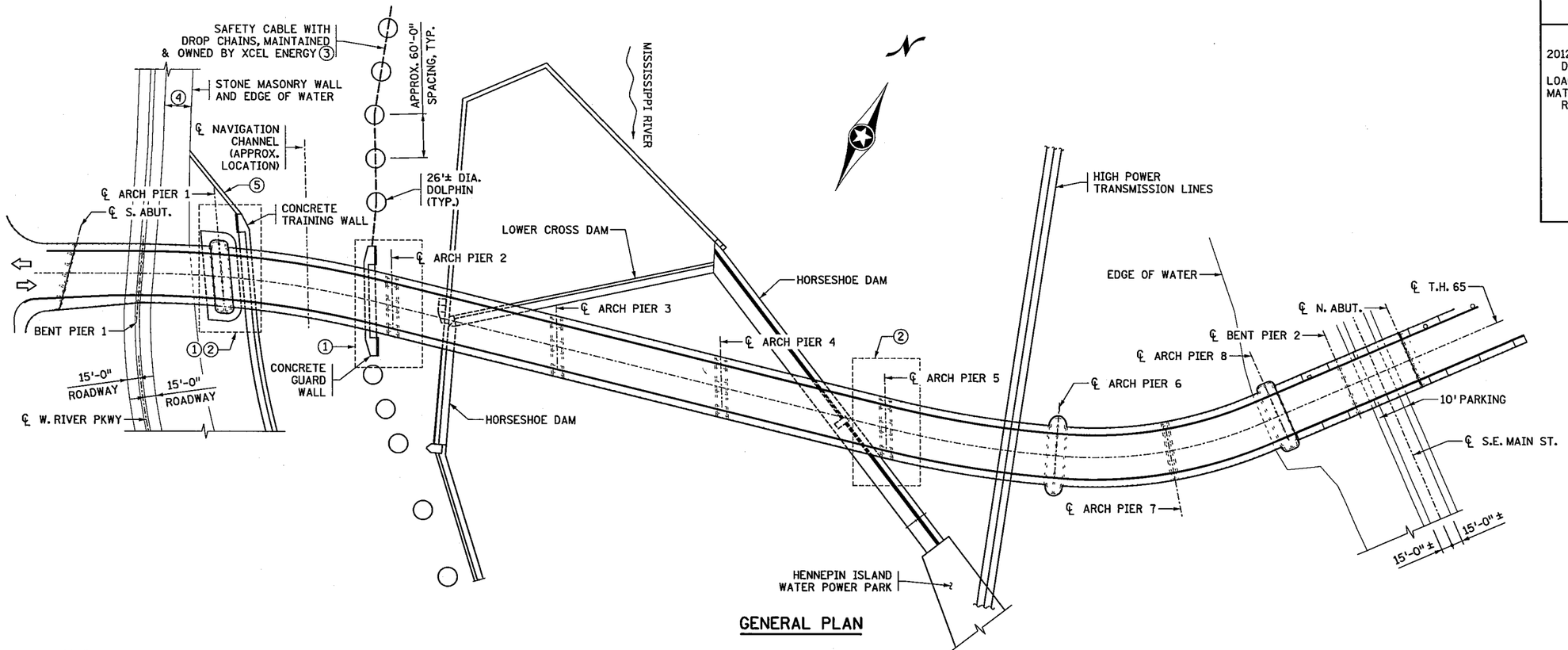

GENERAL PLAN

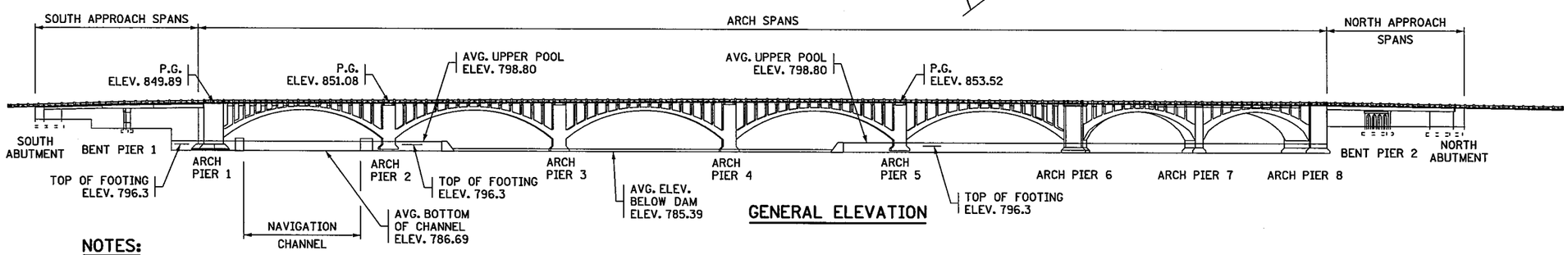

GENERAL ELEVATION

NOTES:

1. PERFORM CONCRETE SURFACE REPAIRS FROM BOTTOM OF ARCH TO TOP OF FOOTING AROUND PERIMETER OF PIER.
2. CLEAN FOOTING VOIDS TO BEDROCK SURROUNDING DETERIORATED FOOTING. GROUT ALL VOIDS UNDER AND WITHIN FOOTING (SEE SPECIAL PROVISIONS). PROVIDE ANCHORED CONCRETE ENCASEMENT WALL ALONG PERIMETER OF GROUTED VOIDS TO LIMITS SHOWN IN PLANS. SEE SPECIAL PROVISIONS.
3. CONTRACTOR RESPONSIBLE FOR TEMPORARY REMOVAL OF SAFETY CABLE TO GAIN ACCESS TO PIER 5. COORDINATE WITH XCEL ENERGY. SEE SPECIAL PROVISIONS.
4. APPROX. 36' TO CURB INCLUDES APPROX. 22' SIDEWALKS AND PAVED BIKE TRAIL.
5. ARMY CORPS OF ENGINEERS WALKWAY AND GATE, SEE SPECIAL PROVISIONS.

NOTES:

DIMENSIONS BASED ON AVAILABLE PLANS. CONTRACTOR IS RESPONSIBLE FOR VERIFYING EXISTING DIMENSIONS.

CONTRACTOR IS RESPONSIBLE FOR RESTRAINING ANY CONCRETE ABOVE AND AROUND REPAIR AREAS.

NO CUTTING OR REMOVAL WILL BE PERMITTED UNTIL THE CUTTING LIMITS HAVE BEEN OUTLINED BY THE CONTRACTOR AND APPROVED BY THE ENGINEER. REMOVAL AND RECONSTRUCTION SHALL CONFORM TO Mn/DOT SPEC. 2433.

TH 65 (3RD AVENUE)
MINNESOTA DEPARTMENT OF TRANSPORTATION

T.H. 65 (3RD AVENUE) OVER MISSISSIPI RIVER
MAIN STREET AND WEST RIVER PARKWAY
6.0 MILES SOUTH OF JUNCTION OF I-35W AND T.H. 65

SEC. 23 TWP. 29 N. R. 24 W.
CITY OF MINNEAPOLIS HENNEPIN COUNTY

Nancy Daubenberger DATE: 5/27/14
STATE BRIDGE ENGINEER

HDR Engineering, Inc.

CERTIFIED BY: [signature] 5/23/14
LICENSED PROFESSIONAL ENGINEER DATE
NAME: JACOB Z. BRONDER LIC. NO. 41848

TITLE: GENERAL PLAN & ELEVATION

DES: JL	DR: JN	APPROVED:
CHK: RJR	CHK: RJR	

SHEET NO. 2 OF 19 SHEETS

BRIDGE NO. 2440

untitled
2:51:57 PM
5/23/2014
\\mpls-srv1\EGGCADStandards\MNDOT_BR_V8i\PLOTDRV\MNDOT.PLT
\\mpls-srv1\EGGCADStandards\MNDOT_BR_V8i\PLOTDRV\PEN\MNDOT_BW.TBL
\\mpls-srv1\EGGCADStandards\MNDOT_BR_V8i\PLOTDRV\PEN\MNDOT_BW.TBL
p:\PWAPPOMA001\NorthCentral_Data\Documents\0075691\CON0085500\0000000022306l\13.00.CAD\Plan Sheets\005

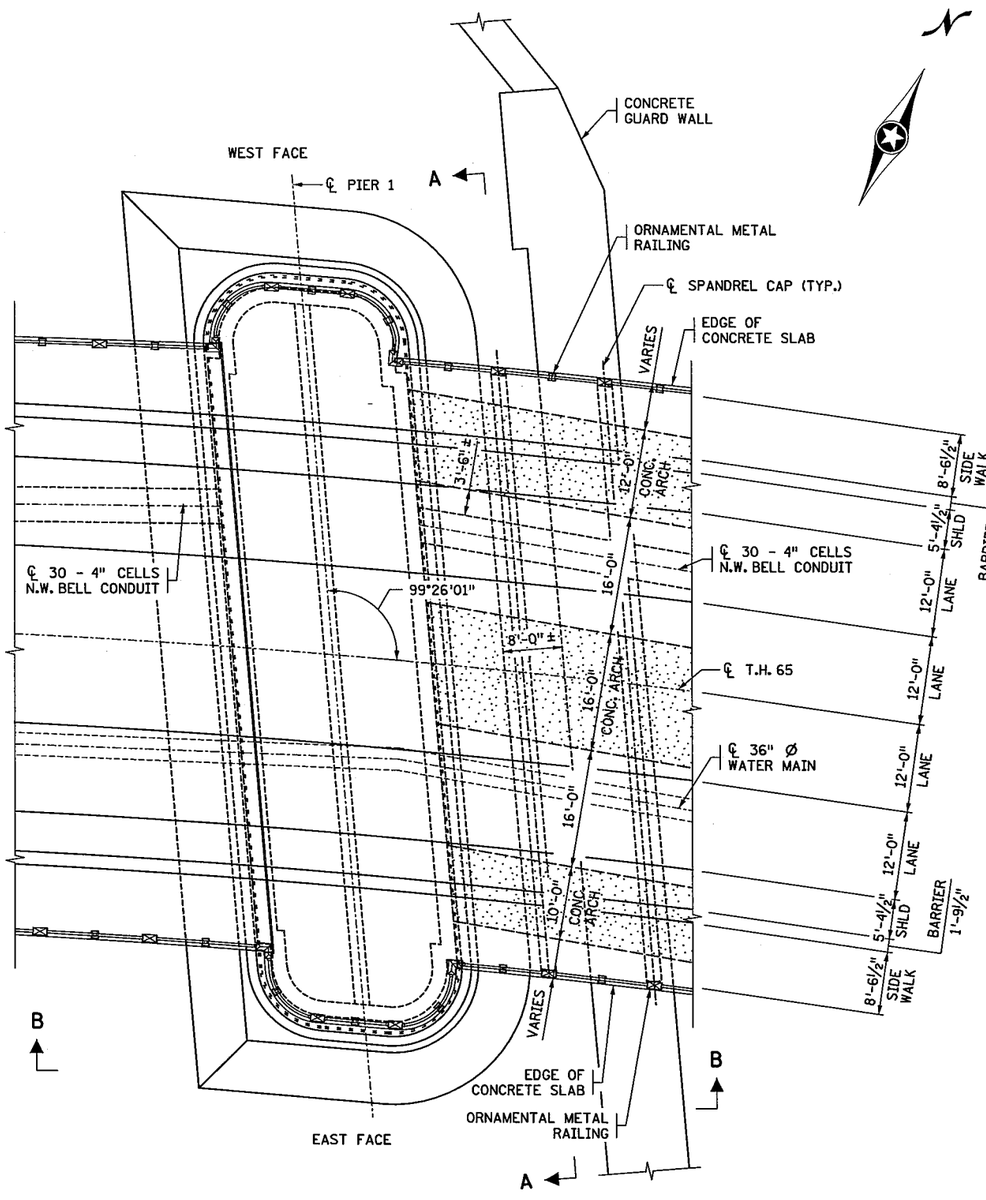

PIER 1 PLAN

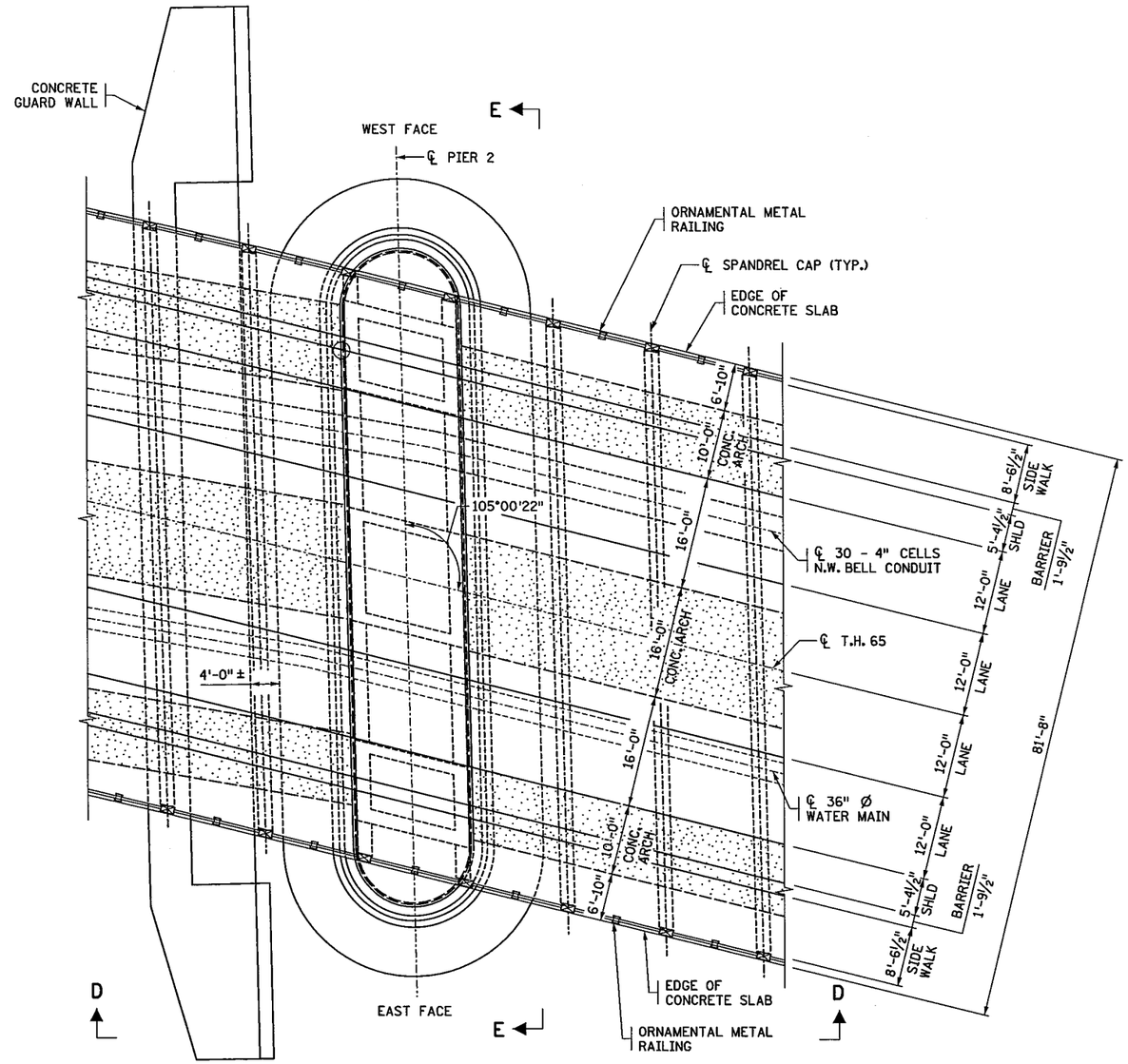

PIER 2 PLAN

NOTES:

SEE SHEET 4 FOR PIER 1 ELEVATION VIEWS A-A & B-B.

SEE SHEET 5 FOR PIER 2 ELEVATION VIEWS D-D & E-E.

HDR Engineering, Inc.	CERTIFIED BY: LICENSED PROFESSIONAL ENGINEER 5/23/14 DATE NAME: JACOB Z. BRONDER LIC. NO. 41848	TITLE: PIER 1 & 2 GEOMETRY	DES: JL DR: JN CHK: RJR CHK: RJR SHEET NO. 3 OF 19 SHEETS	APPROVED:	BRIDGE NO. 2440

untitled
2:52:01 PM
5/23/2014
\\mspe-srv1\ECGCADStandards\MNDOT_BR_V8I\PLOTDRV\MNDOT.PLT
\\mspe-srv1\ECGCADStandards\MNDOT_BR_V8I\PLOTDRV\PEN\MNDOT_BW.TBL
pw:\\PWAPPOMA001:NorthCentral_Omaha\Documents\007569\CON0085500\000000000223061\13.00_CAD\Plan Sheets\3001

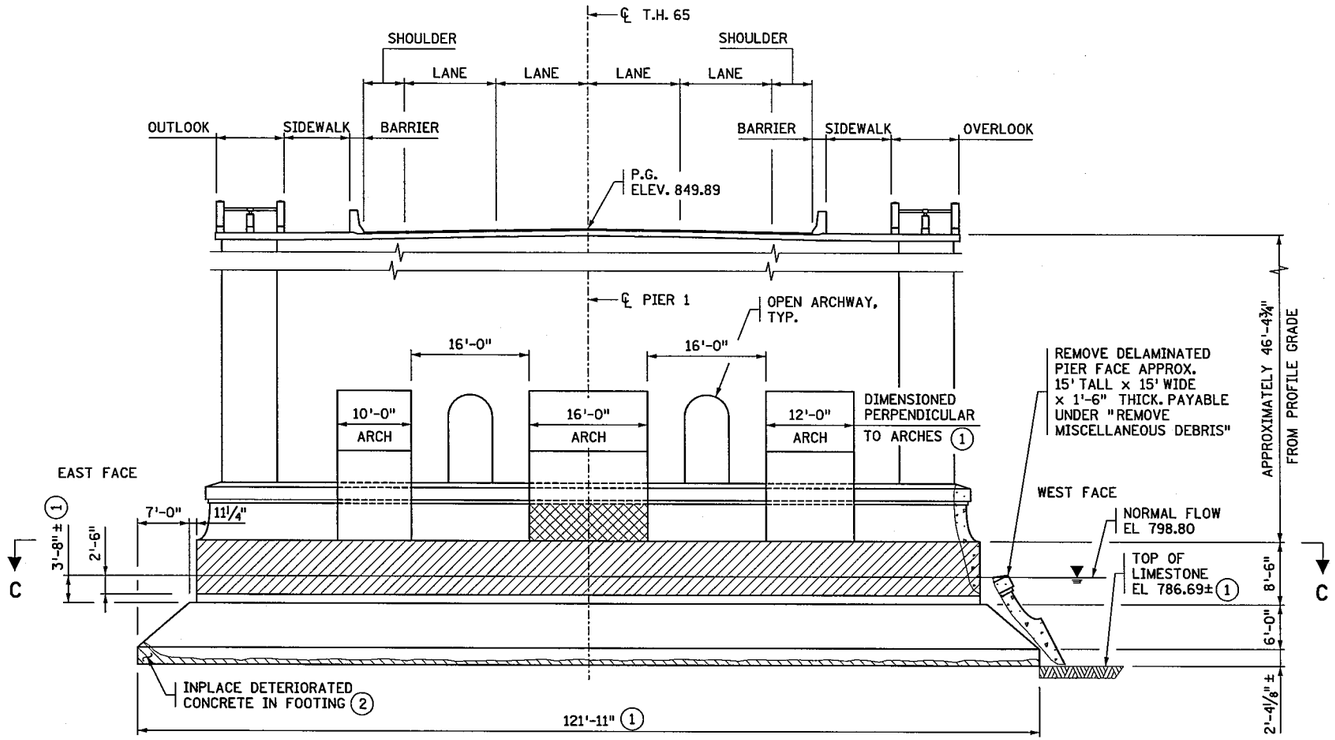

PIER 1 NORTH ELEVATION - VIEW A-A

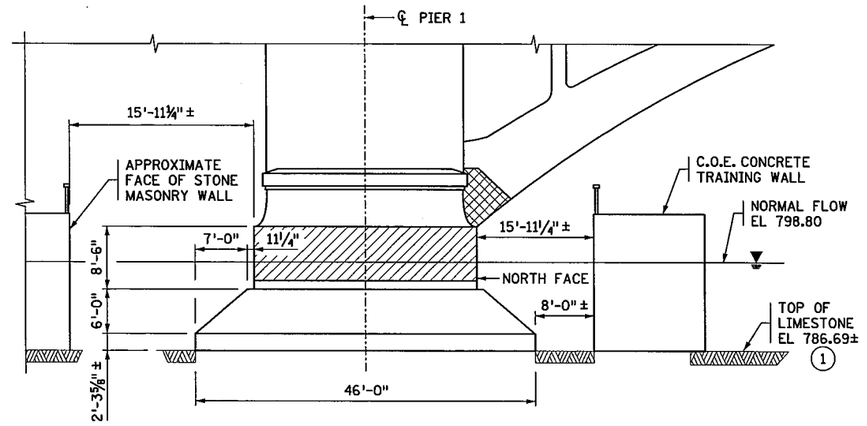

PIER 1 EAST ELEVATION - VIEW B-B

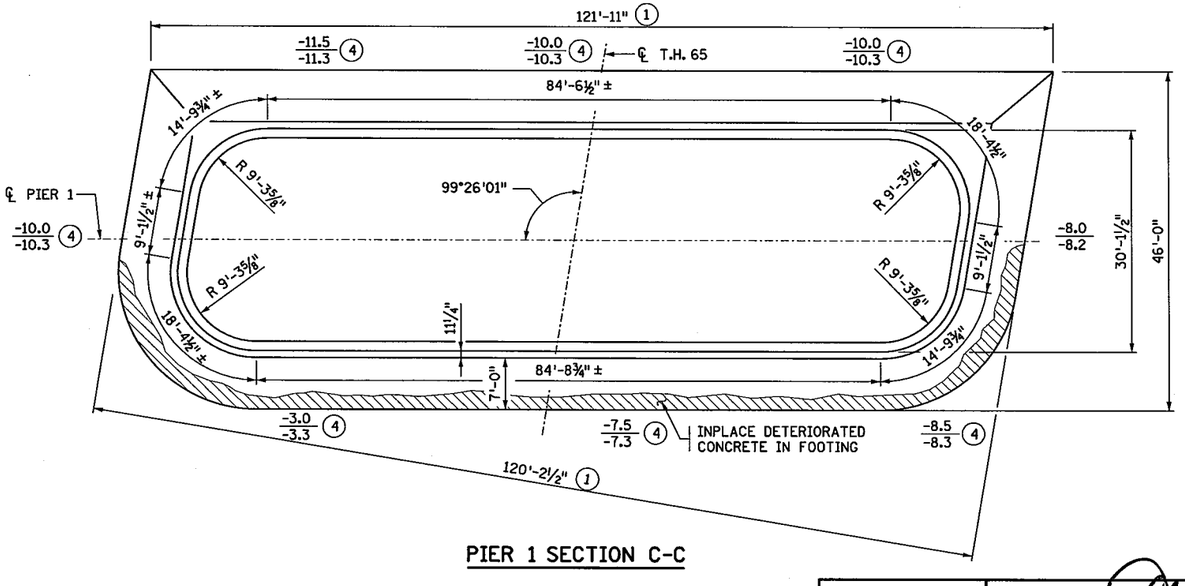

PIER 1 SECTION C-C

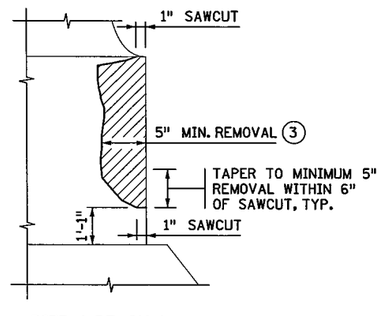

PIER 1 REMOVAL

NOTES:

UNVERIFIED INFORMATION INDICATES PIER 1 MAY CONTAIN A CONCRETE FOOTING SEAL, NOT SHOWN. VERIFY FOOTING DIMENSIONS PRIOR TO ORDERING MATERIALS.

REMOVE DETERIORATED CONCRETE FROM CENTER ARCH BASE BY SANDBLASTING AND REPAIR WITH SHOTCRETE OR CAST-IN PLACE CONCRETE. REMOVAL AREA NOT TO EXCEED 200 SF AND 6" DEEP. INCLUDED IN ITEM "CONCRETE SURFACE REPAIR".

DENOTES REMOVAL OF UNSOUND CONCRETE AND REPAIR WITH SHOTCRETE OR CAST-IN PLACE CONCRETE. INCLUDED IN ITEM "CONCRETE SURFACE REPAIR TYPE __".

DENOTES POTENTIAL SPALLED AREAS ALONG PERIMETER. REMOVE UNSOUND CONCRETE AND REPAIR WITH STRUCTURAL CONCRETE (1XJM). INCLUDED IN ITEM "RECONSTRUCT FOUNDATION".

SEE SHEET 3 FOR LOCATION OF SECTIONS A-A & B-B.

SEE SHEET 5 FOR SECTION C-C RECONSTRUCTION.

ALL CONCRETE PLACED BELOW WATER SHALL BE PUMPED OR TREMIED INPLACE AND NOT MIXED WITH WATER.

(1) FIELD VERIFY.

(2) VERTICAL FOOTING EXPOSURE BETWEEN 2' AND 3' TALL. MODERATE TO HEAVYSPALLING AND DETERIORATION WITH 6" TYPICAL AND UP TO 2' MAXIMUM PENETRATION.

(3) REMOVE UNSOUND CONCRETE 12" MAX.

(4) -8.0 / -8.2 SOUNDING DEPTH FROM WATERLINE (10/28/12) / SOUNDING DEPTH FROM WATERLINE (10/23/08)

HDR Engineering, Inc.	CERTIFIED BY [signature] LICENSED PROFESSIONAL ENGINEER 5/23/14 DATE NAME: JACOB Z. BRONDER LIC. NO. 41848	TITLE: PIER 1 REMOVALS	DES: JL DR: JN CHK: RJR CHK: RJR	APPROVED:	BRIDGE NO. 2440
			SHEET NO. 4 OF 19 SHEETS		

untitled
2:52:04 PM
5/23/2014
\\mspe-srv1\ECGCADStandards\MNDOT_BR_V8I\PLOTDRV\MNDOT.PLT
\\mspe-srv1\ECGCADStandards\MNDOT_BR_V8I\PLOTDRV\PEN\MNDOT_BW.TBL
pw:\\PWAPPOMA001:NorthCentral_Omaha\Documents\007569\CON0085500\000000000223061\13.00_CAD\Plan Sheets\3003

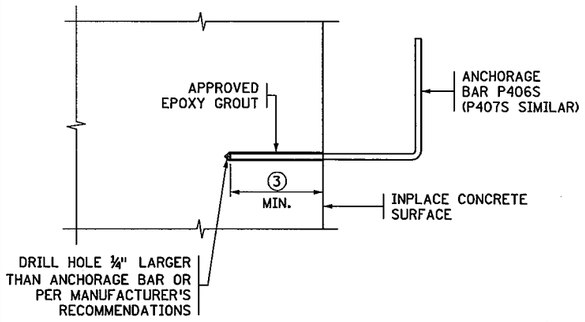

ANCHORAGE DETAIL

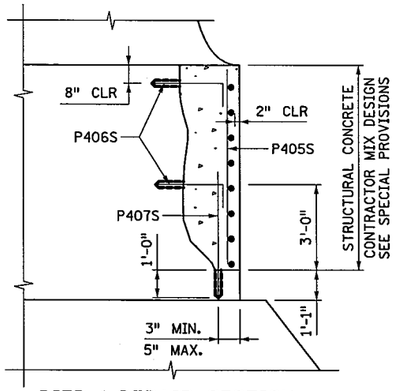

PIER 1 REPAIR SECTION

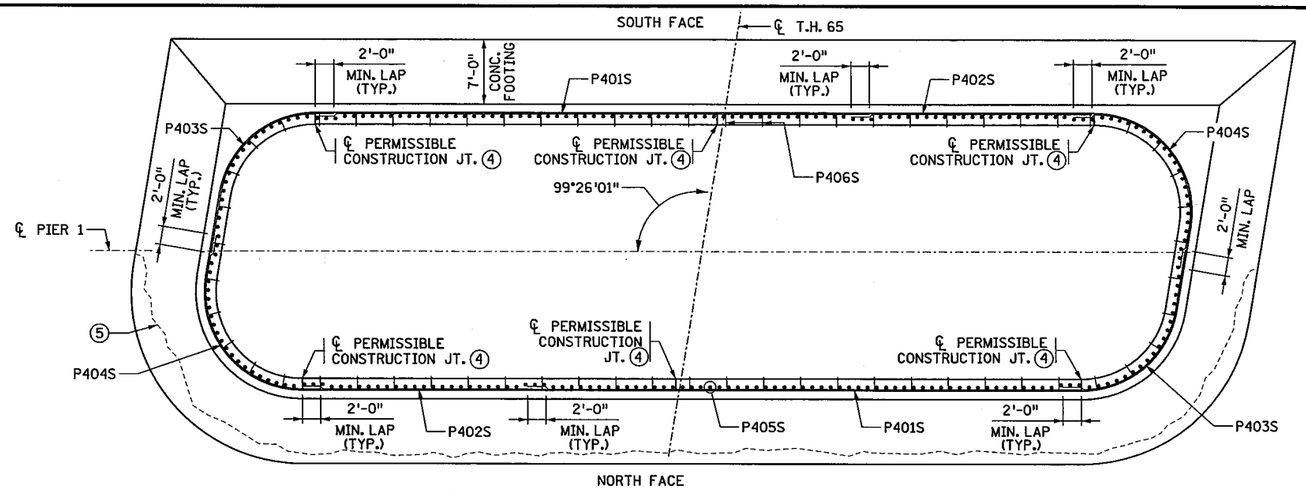

PIER 1 RECONSTRUCTION - SECTION C-C

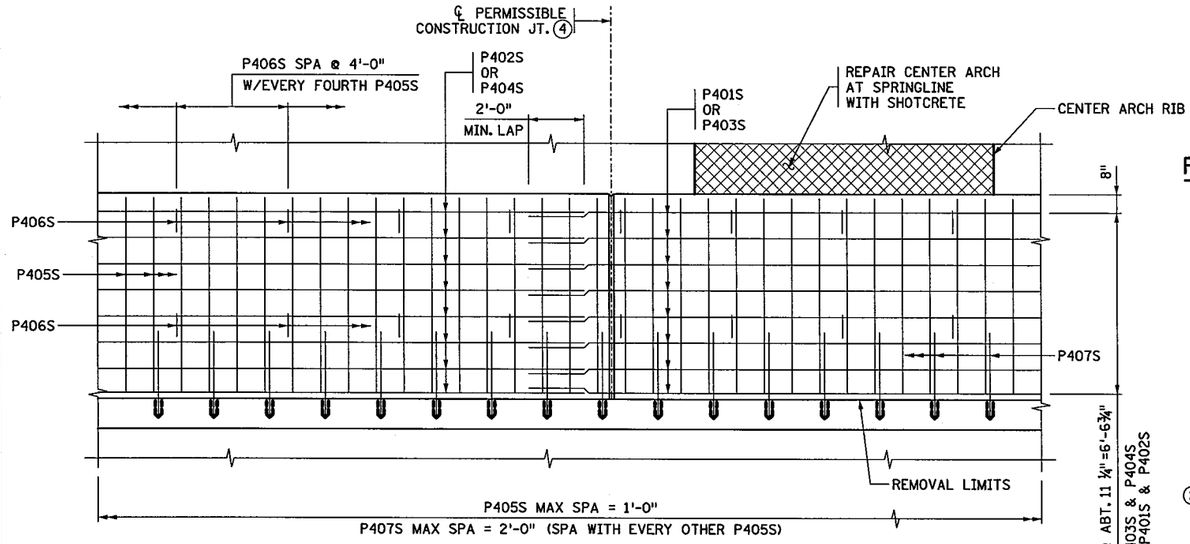

PIER 1 ELEVATION

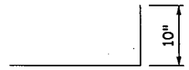

P406S, P409S & P410S ①③

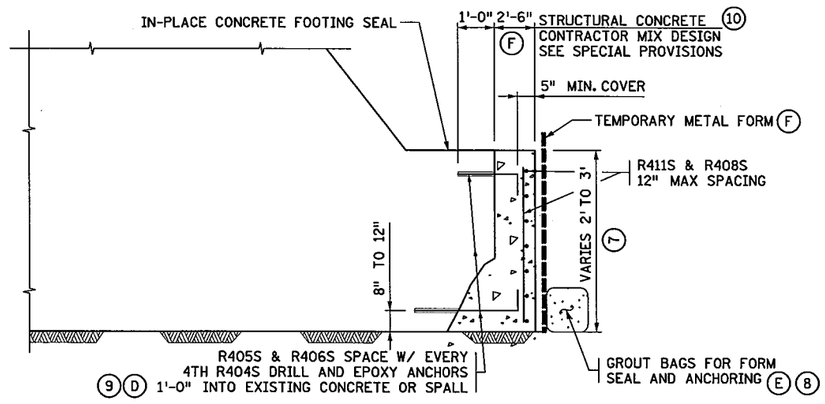

RECONSTRUCT FOUNDATION TYPE 1 DETAIL

(NOT TO SCALE)

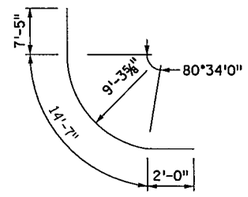

P403S

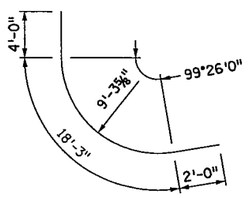

P404S

ESTIMATED QUANTITIES FOR RECONSTRUCT FOUNDATION TYPE 1 ⑥		
STRUCTURAL CONCRETE	34	CU. YD.

BILL OF REINFORCEMENT FOR RECONSTRUCT FOUNDATION TYPE 1

	BAR	NO	LENGTH	SHAPE	LOCATION
②	R408S	150	2'-0"	——	FOOTING VERTICAL
①	R409S	38	3'-10"	L	HORIZONTAL DOWEL
②①	R410S	38	5'-10"	L	HORIZONTAL DOWEL
②	R411S	6	50'-0"	——	FOOTING HORIZONTAL

BILL OF REINFORCEMENT FOR PIER 1 CONCRETE SURFACE REPAIR TYPE __

	BAR	NO	LENGTH	SHAPE	LOCATION
	P401S	16	50'-0"	——	FOOTING HORIZONTAL
	P402S	16	36'-5"	——	FOOTING HORIZONTAL
	P403S	16	24'-0"	⌞	FOOTING HORIZONTAL
	P404S	16	24'-3"	⌞	FOOTING HORIZONTAL
	P405S	254	7'-0"	——	FOOTING VERTICAL
①	P406S	128	2'-8"	L	HORIZONTAL - DOWEL
②①	P407S	128	3'-6"	——	VERTICAL - DOWEL

SUMMARY OF QUANTITIES FOR PIER 1

①	REINFORCEMENT BARS (STAINLESS STEEL)	3030	POUND
	GROUTED REINF BARS (STAINLESS STEEL)	332	EACH
	RECONSTRUCT FOUNDATION TYPE 1	1	LUMP SUM
	CONCRETE SURFACE REPAIR	200	SQ. FT.
	CONCRETE SURFACE REPAIR TYPE 1	2032	SQ. FT.
	REMOVE MISCELLANEOUS DEBRIS	0.5	LUMP SUM
	CONCRETE SURFACE REPAIR TYPE 2	203	SQ. FT.

NOTES:

① REINFORCEMENT BARS PLUS DRILLING AND INSTALLING INCLUDED IN PAYMENT FOR "GROUTED REINF BARS (STAINLESS STEEL)". NOT INCLUDED IN WEIGHT OF REINFORCEMENT.

② BEND AND/OR CUT TO LENGTH IN FIELD.

③ 12" MINIMUM EMBEDMENT.

④ 6 VERTICAL CONSTRUCTION JOINTS MAY BE USED.

⑤ TOP EXPOSURE, SPALLING AND DETERIORATION OF FOOTING CONCRETE BETWEEN 6" (TYPICAL) UP TO 2' PENETRATION. CLEAN UNSUITABLE MATERIALS FROM SPALLS AND VOIDS. FORM AND CAST ENCAPSULATION CONCRETE. ALL WORK ASSOCIATED WITH REPAIRING CONCRETE FOOTING SEAL SPALLS SHALL BE PAID UNDER "RECONSTRUCT FOUNDATION TYPE 1".

⑥ 6 VERTICAL CONSTRUCTION JOINTS MAY BE USED.

⑦ THIS DIMENSION TIED TO THE CONCRETE FOOTING SEAL DIMENSION, VERIFY IN THE FIELD.

⑧ GROUT BAGS OR ENCAPSULATION FORMING SHALL NOT BE INSTALLED UNTIL ENGINEER REVIEWS AND APPROVES VOID IS ADEQUATELY CLEARED OF SEDIMENT AND DEBRIS. ALL CLEANING AND DEBRIS REMOVAL TO BE PAID FOR AS "REMOVE MISCELLANEOUS DEBRIS".

⑨ FIELD TRIM R406S AS NECESSARY.

⑩ PAID FOR UNDER "RECONSTRUCT FOUNDATION TYPE 1".

SEE SHEET 11 FOR LETTERED NOTES RELATING TO CONSTRUCTION SEQUENCE FOR UNDERWATER CONSTRUCTION.

SEE SHEET 4 FOR LOCATION OF SECTION C-C.

REPAIR WITH SHOTCRETE CENTER ARCH RIB AT SPRINGLINE.

DENOTES CAST-IN-PLACE CONCRETE REPAIR.

HDR Engineering, Inc.

CERTIFIED BY [signature] LICENSED PROFESSIONAL ENGINEER 5/23/14 DATE

NAME: JACOB Z. BRONDER LIC. NO. 41848

TITLE: PIER 1 REPAIR DETAILS

DES: JL	DR: JN	APPROVED:
CHK: RJR	CHK: RJR	

SHEET NO. 5 OF 19 SHEETS

BRIDGE NO. 2440

untitled
2:52:09 PM
5/23/2014
\\mspe-srv1\ECGCADS1\mndgrds\MNDOT_BR_V8i\PLOTDRV\MNDOT.PLT
\\mspe-srv1\ECGCADS1\mndgrds\MNDOT_BR_V8i\PLOTDRV\PEN\MNDOT_BW.TBL
pw:\\PWAPPDMA001:NorthCentral_Dmadv\Documents\0075169\CONO08550D\0000000022306\13.00_CAD\Plan Sheets\3004

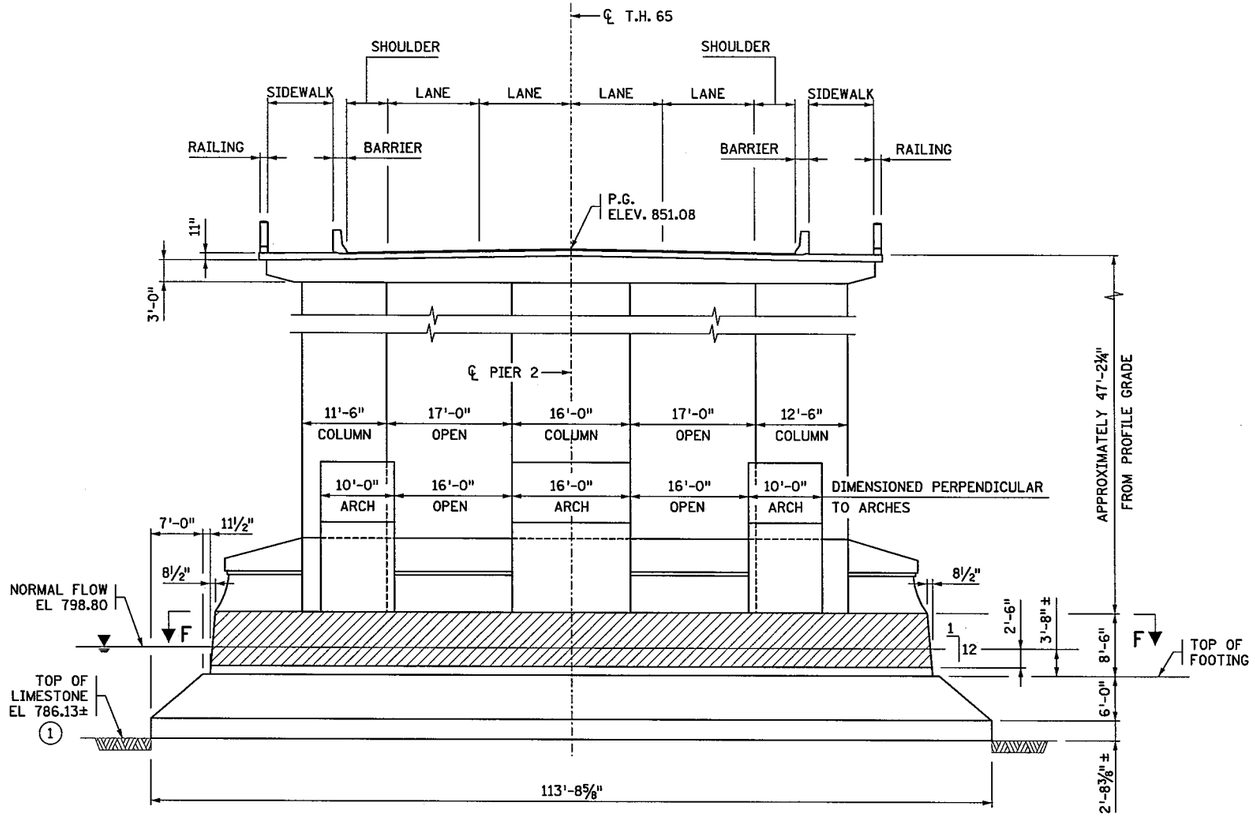

PIER 2 NORTH ELEVATION - VIEW E-E

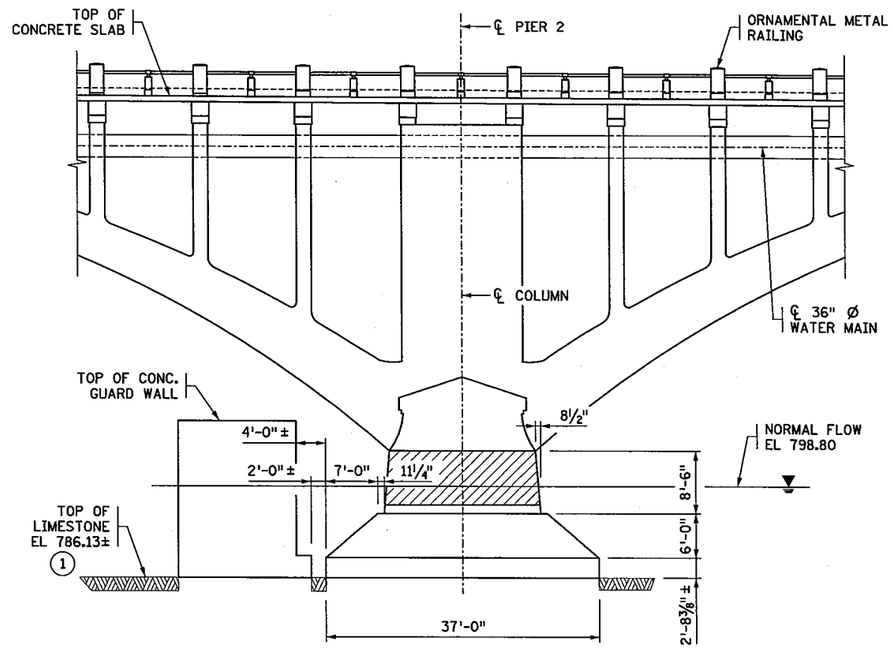

PIER 2 EAST ELEVATION - VIEW D-D

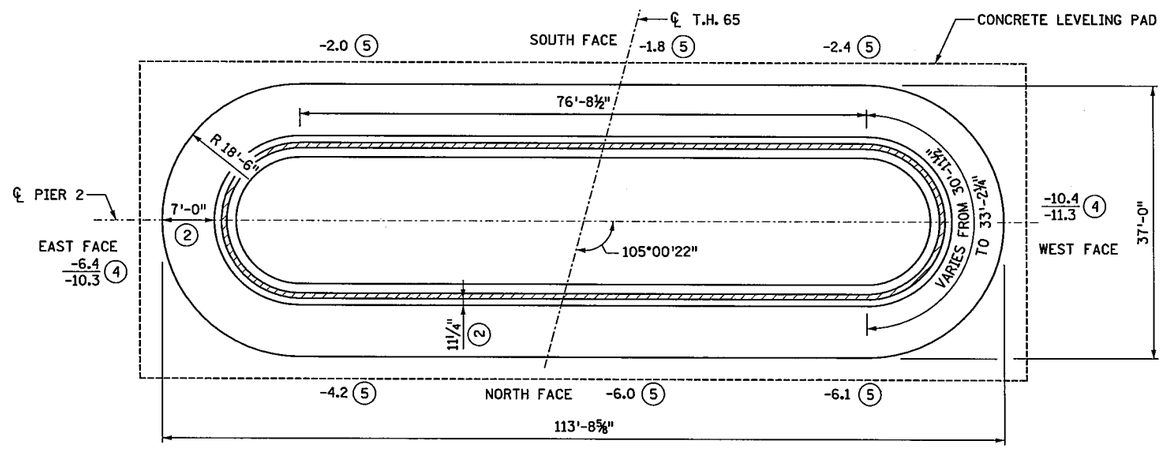

PIER 2 SECTION F-F

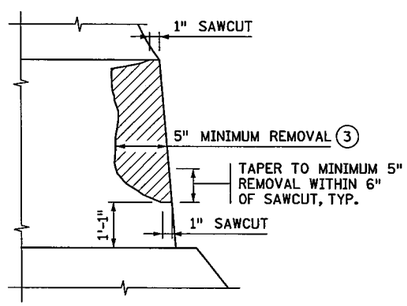

PIER 2 REMOVAL SECTION

NOTES:

▨ DENOTES REMOVAL OF UNSOUND CONCRETE AND REPAIR WITH CAST-IN PLACE CONCRETE.

SEE SHEET 3 FOR LOCATION OF SECTIONS D-D & E-E.

(1) FIELD VERIFY.

(2) AT TOP OF FOOTING.

(3) REMOVE UNSOUND CONCRETE 12" MAX.

(4) -8.0 SOUNDING DEPTH FROM WATERLINE (10/28/12)
-8.2 SOUNDING DEPTH FROM WATERLINE (10/23/08)

(5) SOUNDING DEPTH FROM WATERLINE (10/28/12).

HDR Engineering, Inc.

CERTIFIED BY _____ 5/23/14
LICENSED PROFESSIONAL ENGINEER — DATE

NAME: JACOB Z. BRONDER LIC. NO. 41848

TITLE: PIER 2 REMOVALS

DES: JL	DR: JN	APPROVED:
CHK: RJR	CHK: RJR	

SHEET NO. 6 OF 19 SHEETS

BRIDGE NO. 2440

untitled
2:15:11 PM
5/23/2014
User=mr
\\mspe-mr\EGCCADS+randgrde\MNDOT_BR_V8i\PLOTDRV\MNDOT.PLT
\\mspe-mr\EGCCADS+randgrde\MNDOT_BR_V8i\PLOTDRV\PEN\MNDOT.BW.TBL
pw:\\PWAPPDMA001i:NorthCentral.Documents\D07569\CON0085500\0000000022306l\13.00.CAD\Plan Sheets\3005

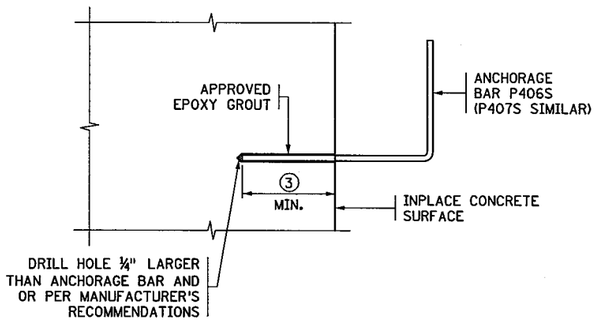

ANCHORAGE DETAIL

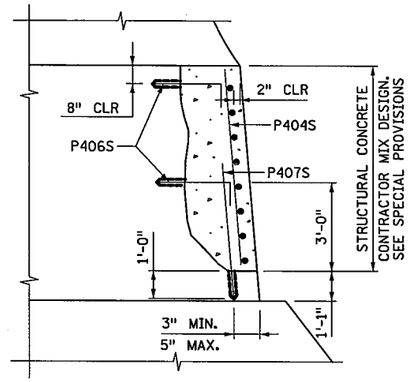

PIER 2 REPAIR SECTION

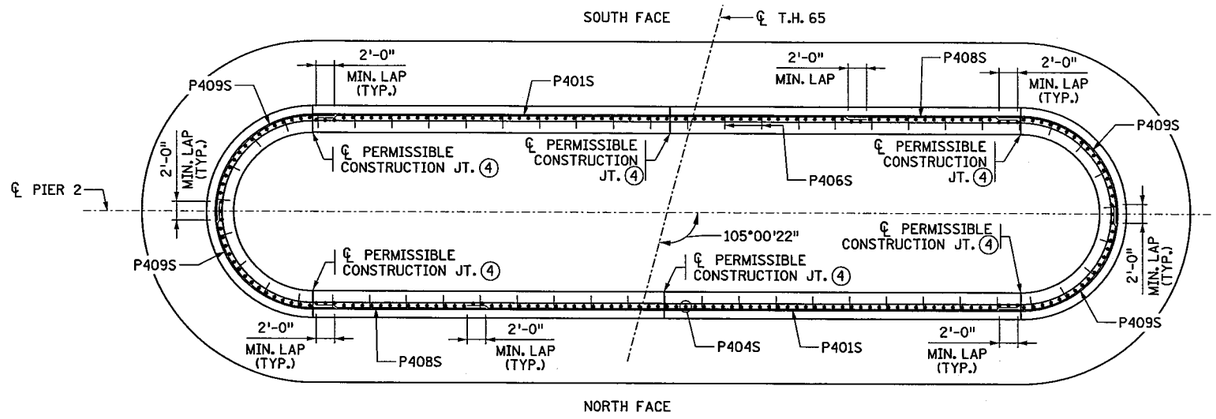

PIER 2 RECONSTRUCTION - VIEW F-F

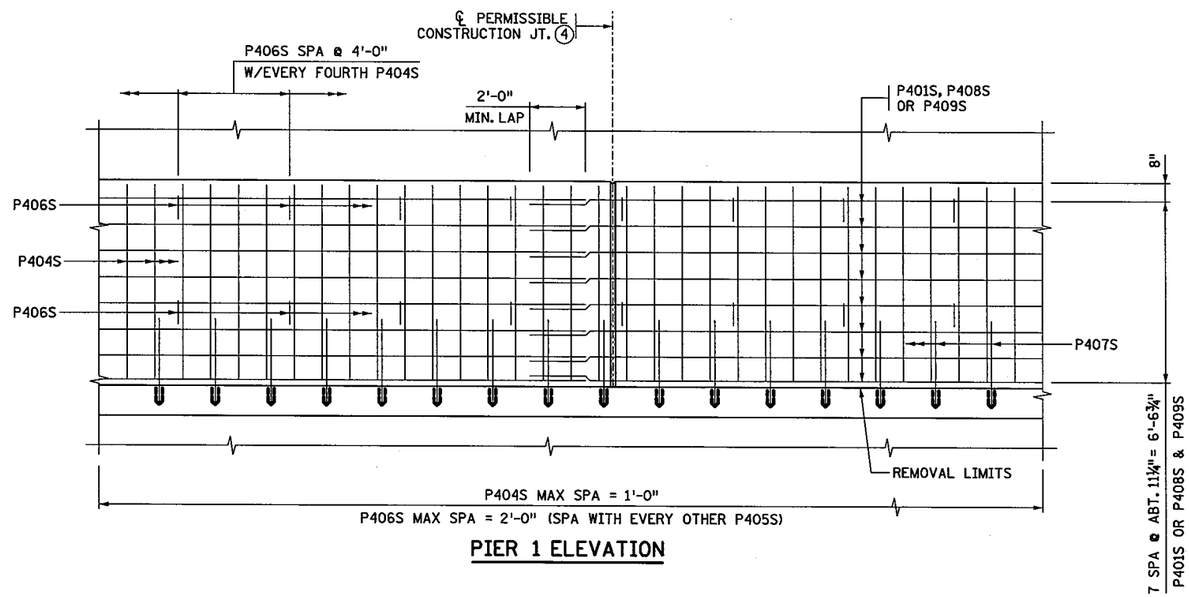

PIER 1 ELEVATION

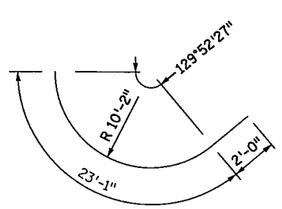

P409S

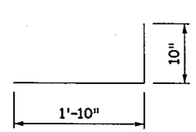

P406S ①②

SUMMARY OF QUANTITIES FOR PIER 2		
REINFORCEMENT BARS (STAINLESS STEEL)	2410	POUND
① GROUTED REINF BARS (STAINLESS STEEL)	220	EACH
CONCRETE SURFACE REPAIR TYPE 1	1600	SQ. FT.
CONCRETE SURFACE REPAIR TYPE 2	160	SQ. FT.

① REINFORCEMENT BARS PLUS DRILLING AND INSTALLING INCLUDED IN PAYMENT FOR "GROUTED REINF BARS (STAINLESS STEEL)".

② BEND AND/OR CUT TO LENGTH IN FIELD.

③ 12" MINIMUM EMBEDMENT.

④ 6 VERTICAL CONSTRUCTION JOINTS MAY BE USED.

SEE SHEET 6 FOR LOCATION OF SECTION F-F.

DENOTES CONCRETE REPAIR.

BILL OF REINFORCEMENT FOR PIER 2 CONCRETE SURFACE REPAIR TYPE __				
BAR	NO	LENGTH	SHAPE	LOCATION
P401S	16	50'-0"	———	FOOTING HORIZONTAL
P404S	220	7'-0"	———	FOOTING VERTICAL
②① P406S	110	2'-8"	└──	HORIZONTAL DOWEL
②① P407S	110	3'-6"	———	VERTICAL DOWEL
P408S	16	28'-9"	———	FOOTING HORIZONTAL
P409S	32	25'-1"	└	FOOTING HORIZONTAL

HDR Engineering, Inc.

CERTIFIED BY [signature] 5/23/14
LICENSED PROFESSIONAL ENGINEER DATE
NAME: JACOB Z. BRONDER LIC. NO. 41848

TITLE: PIER 2 REPAIR DETAILS

DES: JL DR: JN APPROVED:
CHK: RJR CHK: RJR

SHEET NO. 7 OF 19 SHEETS

BRIDGE NO. 2440

untitled
2:52:17 PM
5/23/2014
\\mspe-srv1\ECGCADStandards\MNDOT_BR_V8i\PLOTDRV\MNDOT.PLT
\\mspe-srv1\ECGCADStandards\MNDOT_BR_V8i\PLOTDRV\PEN\MNDOT_BW.TBL
pw:\\PWAPPOMA001:NorthCentral_Omaha\Documents\007569\CON0085500\000000000223061\13.00_CAD\Plan Sheets\3011

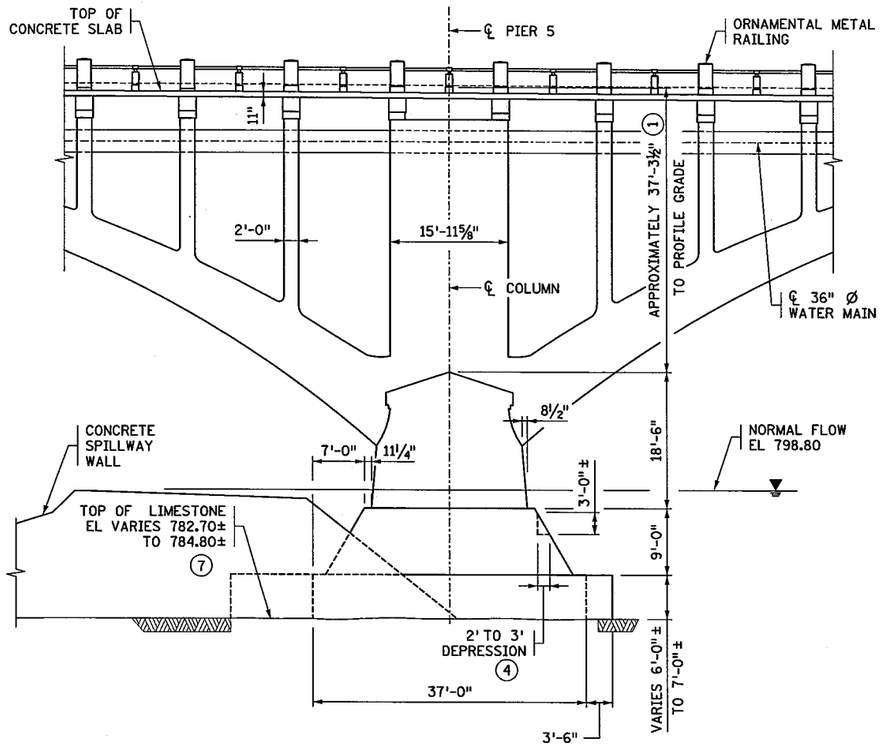

EAST ELEVATION - LOOKING WEST

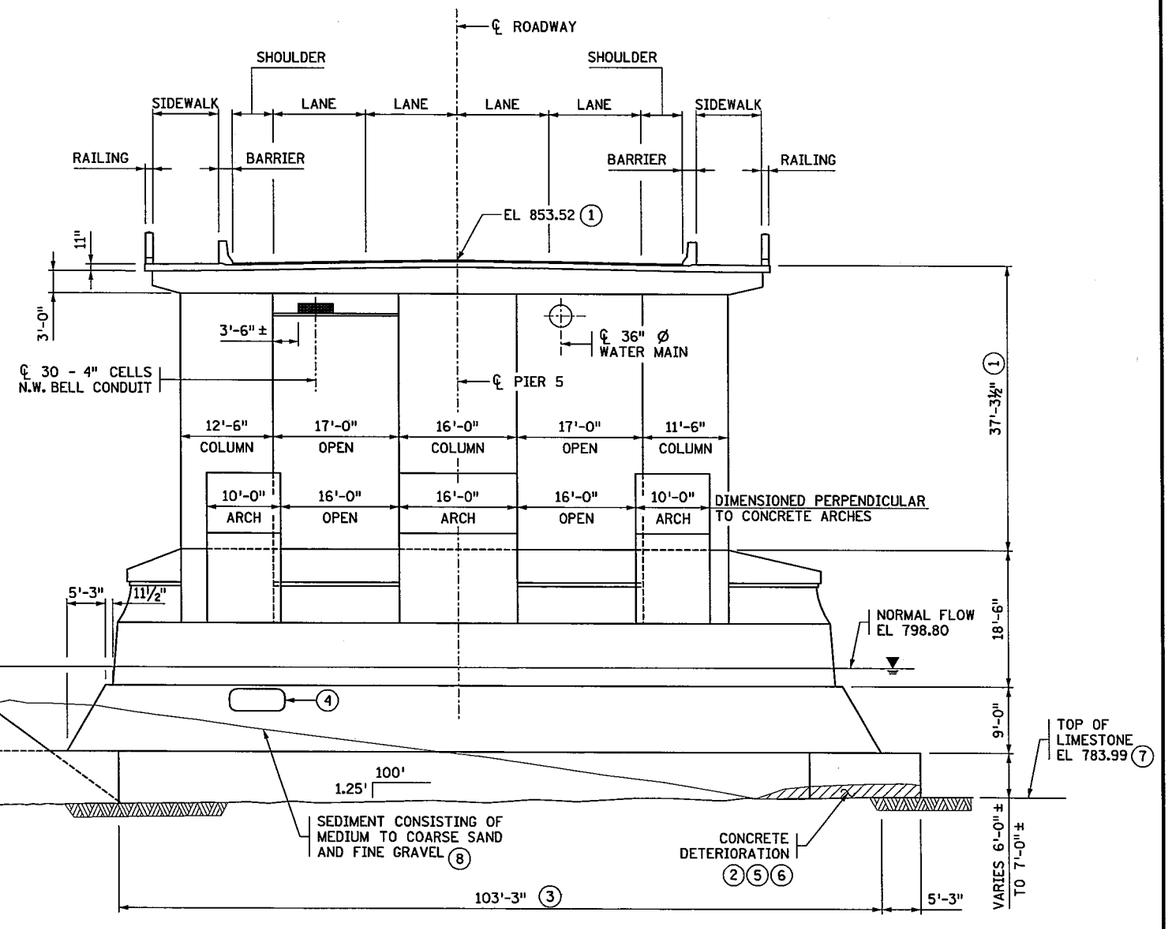

NORTH ELEVATION - LOOKING SOUTH

NOTES:

▨ DENOTES KNOWN UNDERCUT AREA ALONG PERIMETER. REMOVE UNSOUND CONCRETE AND REPAIR WITH STRUCTURAL CONCRETE (1AJM). INCLUDED IN ITEM "RECONSTRUCT FOUNDATION".

SEE SHEETS 12, 13 AND 14 FOR BORING LOGS.

(1) ELEVATION TO PROFILE GRADE, CENTERLINE OF PIER 5.

(2) FIELD VERIFY ANY ADDITIONAL UNDERCUT AREAS. DETAILS SHOW KNOWN AREAS REQUIRING REPAIR. ACTUAL AREAS SHALL BE DETERMINED IN THE FIELD.

(3) CONCRETE FOOTING SEAL LIMITS TO BE IDENTIFIED IN THE FIELD AS NECESSARY.

(4) 5' WIDTH x 3' HEIGHT AREA OF SPALL, 2' TO 3' DEPTH, CENTERED APPROXIMATE 3' BELOW NORMAL POOL. SEE SURFACE REMOVAL AND REPAIR DETAILS SHEET 12.

(5) A VOID, POTENTIALLY CONTINUING THROUGH CONCRETE FOOTING SEAL, WAS DISCOVERED DURING NOVEMBER 2012 UNDERWATER INSPECTION. LIMITS AT THE SOUTH FACE AT THE TIME OF INSPECTION WERE DESCRIBED AS "UP TO 6' WIDE AND VARYING IN HEIGHT FROM 1' TO 3'".

(6) 3-D ACOUSTIC SCAN AVAILABLE FOR CONTRACTOR REVIEW. AN UNDERCUT AREA WAS DISCOVERED IN A 3-D ACOUSTIC IMAGING SCAN MEASURING MAXIMUM APPROXIMATE DEPTH OF 2'-6" AND 15' LONG ALONG CONCRETE FOOTING SEAL.

(7) FIELD VERIFY TOP OF LIMESTONE AS NECESSARY.

(8) SEDIMENT LEVELS APPROXIMATE AND VARY SEASONALLY. FIELD VERIFY.

HDR Engineering, Inc.

CERTIFIED BY _____ 5/23/14
LICENSED PROFESSIONAL ENGINEER — DATE

NAME: JACOB Z. BRONDER LIC. NO. 41848

TITLE: PIER 5 INPLACE CONDITIONS (1 OF 3)

DES: JL	DR: JN	APPROVED:
CHK: RJR	CHK: RJR	

SHEET NO. 8 OF 19 SHEETS

BRIDGE NO. 2440

Untitled
2:52:26 PM
5/23/2014
\\mpe-erv1\EGCADS$tandards\WNDOT_BR_V8i\PLOTDRV\WNDOT.PLT
\\mpe-erv1\EGCADS$tandards\WNDOT_BR_V8i\PLOTDRV\PEN\WNDOT_BW.TBL
pw:\\PWAPPOWA001:Northcentral_Dmana\Documents\007569\CON00855500\0000000022306l\13.00_CADVPlan Sheets\3012

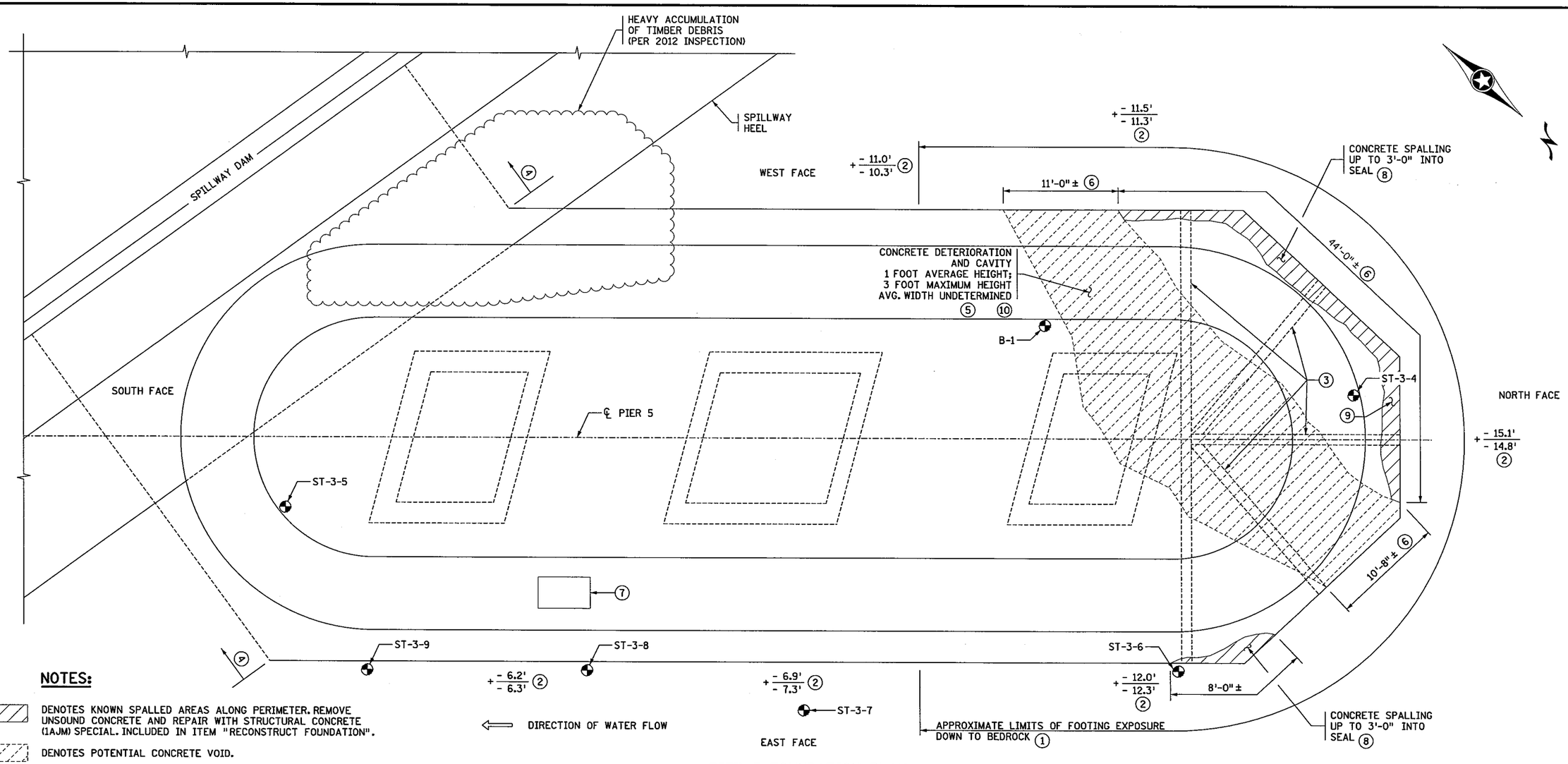

PIER 5 FOUNDATION PLAN

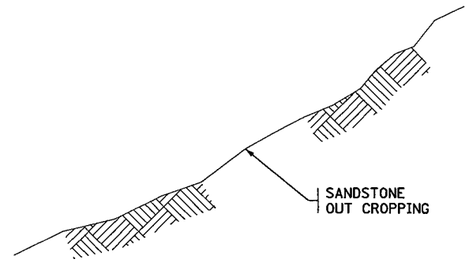

NOTES:

DENOTES KNOWN SPALLED AREAS ALONG PERIMETER. REMOVE UNSOUND CONCRETE AND REPAIR WITH STRUCTURAL CONCRETE (1AJM) SPECIAL. INCLUDED IN ITEM "RECONSTRUCT FOUNDATION".

DENOTES POTENTIAL CONCRETE VOID.

SEE SHEET 11 FOR REPAIR DETAILS.

BORING LOCATIONS.

SEE SHEETS 12 THRU 14 FOR BORING LOGS.

(1) FROM 2012 INSPECTION: THE FOOTING AT PIER 5 WAS EXPOSED DOWN TO BEDROCK AROUND UPSTREAM ⅓ OF PIER.

(2) -8.0 SOUNDING DEPTH FROM WATERLINE (10/28/12)
-8.2 SOUNDING DEPTH FROM WATERLINE (10/23/08)

(3) POSSIBLE TIMBER EMBEDDED IN FOUNDATION. PRECISE LOCATION UNKNOWN.

(4) CONCRETE SEAL LIMITS TO BE IDENTIFIED IN THE FIELD AS NECESSARY.

(5) CONTRACTOR TO CLEAN SEDIMENT AND MISC. DEBRIS FROM CAVITY PRIOR TO FILLING. PAID FOR UNDER "REMOVE MISCELLANEOUS DEBRIS".

(6) FIELD VERIFY AS REQUIRED.

(7) AN AREA 5' WIDE BY 3' HIGH WITH PENETRATIONS BETWEEN 2' AND 3' WAS FOUND ALONG NORTH FACE OF FOOTING AT DOWNSTREAM ¼ POINT OF PIER 5. SEE SURFACE REMOVAL AND REPAIR DETAILS SHEET 12.

(8) FIELD VERIFY ANY ADDITIONAL UNDERCUT AREAS. DETAILS SHOW KNOWN AREAS REQUIRING REPAIR. ACTUAL AREAS SHALL BE DETERMINED IN THE FIELD.

(9) AN UNDERCUT AREA WAS DISCOVERED IN 3-D ACOUSTIC IMAGING SCAN MEASURING MAXIMUM APPROXIMATE DEPTH OF 2'-6" AND 15' LONG ALONG CONCRETE SEAL.

(10) A VOID, POTENTIALLY CONTINUING THROUGH CONCRETE SEAL FOOTING, WAS DISCOVERED DURING NOVEMBER 2012 UNDERWATER INSPECTION. LIMITS AT THE TIME OF INSPECTION WERE DESCRIBED AS "UP TO 6' WIDE AND VARYING IN HEIGHT FROM 1' TO 3'". 3-D ACOUSTIC SCAN AVAILABLE FOR CONTRACTOR REVIEW.

HDR Engineering, Inc.	CERTIFIED BY [signature] LICENSED PROFESSIONAL ENGINEER 5/23/14 DATE NAME: JACOB Z. BRONDER LIC. NO. 41848	TITLE: PIER 5 INPLACE CONDITIONS (2 OF 3)	DES: JL DR: JN CHK: RJR CHK: RJR	APPROVED:	BRIDGE NO. 2440
			SHEET NO. 9 OF 19 SHEETS		

untitled
2:52:30 PM
5/23/2014
\\mspe-srv1\ECGCADStandards\MNDOT_BR_V8i\PLOTDRV\MNDOT.PLT
\\mspe-srv1\ECGCADStandards\MNDOT_BR_V8i\PLOTDRV\PEN\MNDOT_BW.TBL
pw:\\PWAPPOMA001:NorthCentral_Omaha\Documents\007569\CON0085500\000000000223061\13.00_CAD\Plan Sheets\3013

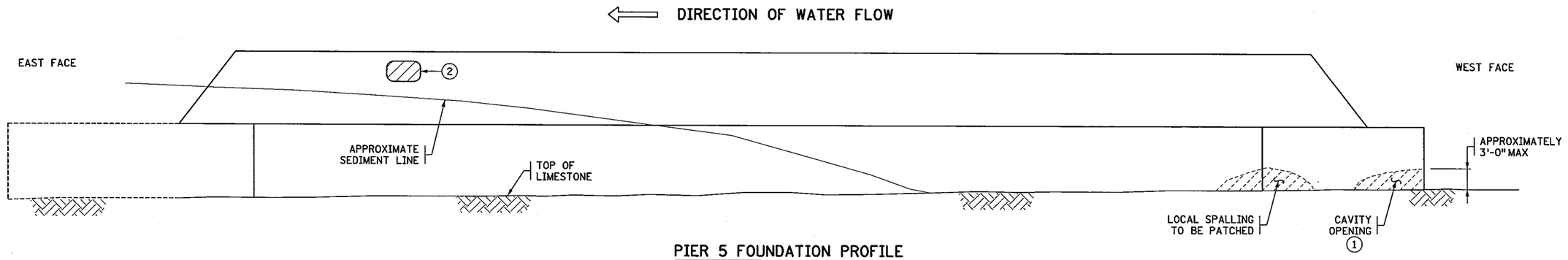

PIER 5 FOUNDATION PROFILE

LOOKING SOUTH

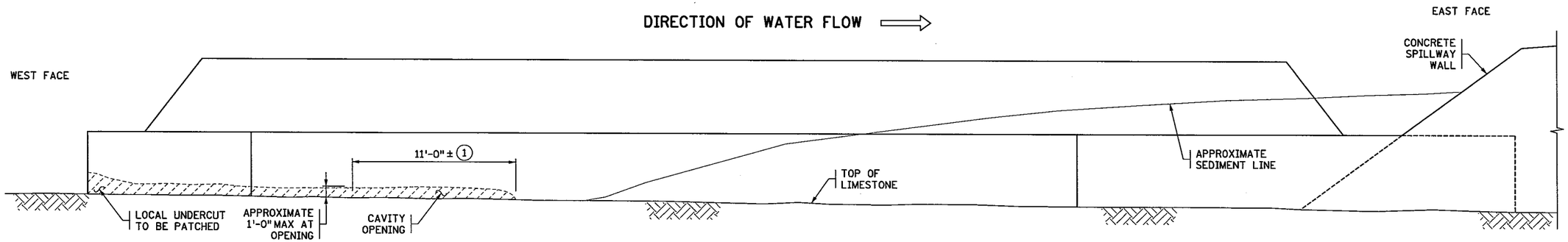

PIER 5 FOUNDATION PROFILE

LOOKING NORTH

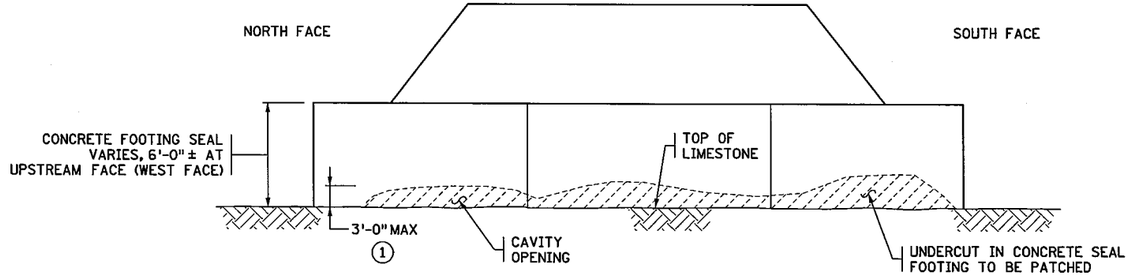

PIER 5 FOUNDATION ELEVATION

UPSTREAM FACE (WEST FACE) LOOKING EAST
(SEDIMENT NOT SHOWN)

NOTES:

SEE SHEET 11 FOR REPAIR DETAILS.

1. FIELD VERIFY.
2. 5' WIDTH x 3' HEIGHT AREA OF SPALL, 2' TO 3' DEPTH, CENTERED APPROXIMATE 3' BELOW NORMAL POOL.

HATCHED AREA INDICATES APPROXIMATE LIMITS OF CONCRETE DETERIORATION.

SCALE : 0 5' HORIZONTAL 0 5' VERTICAL

HDR Engineering, Inc.	CERTIFIED BY [signature] LICENSED PROFESSIONAL ENGINEER 5/23/14 DATE NAME: JACOB Z. BRONDER LIC. NO. 41848	TITLE: PIER 5 INPLACE CONDITIONS (3 OF 3)	DES: JL DR: JN CHK: RJR CHK: RJR SHEET NO. 10 OF 19 SHEETS	APPROVED:	BRIDGE NO. 2440

untitled
2:52:34 PM
5/23/2014
\\mspe-srv1\ECGCADStandards\MNDOT_BR_V8i\PLOTDRV\MNDOT.PLT
\\mspe-srv1\ECGCADStandards\MNDOT_BR_V8i\PLOTDRV\PEN\MNDOT_BW.TBL
pw:\\PWAPPOMA001:NorthCentral_Omaha\Documents\007569\CON0085500\0000000002230611\13.00_CAD\Plan Sheets\3019

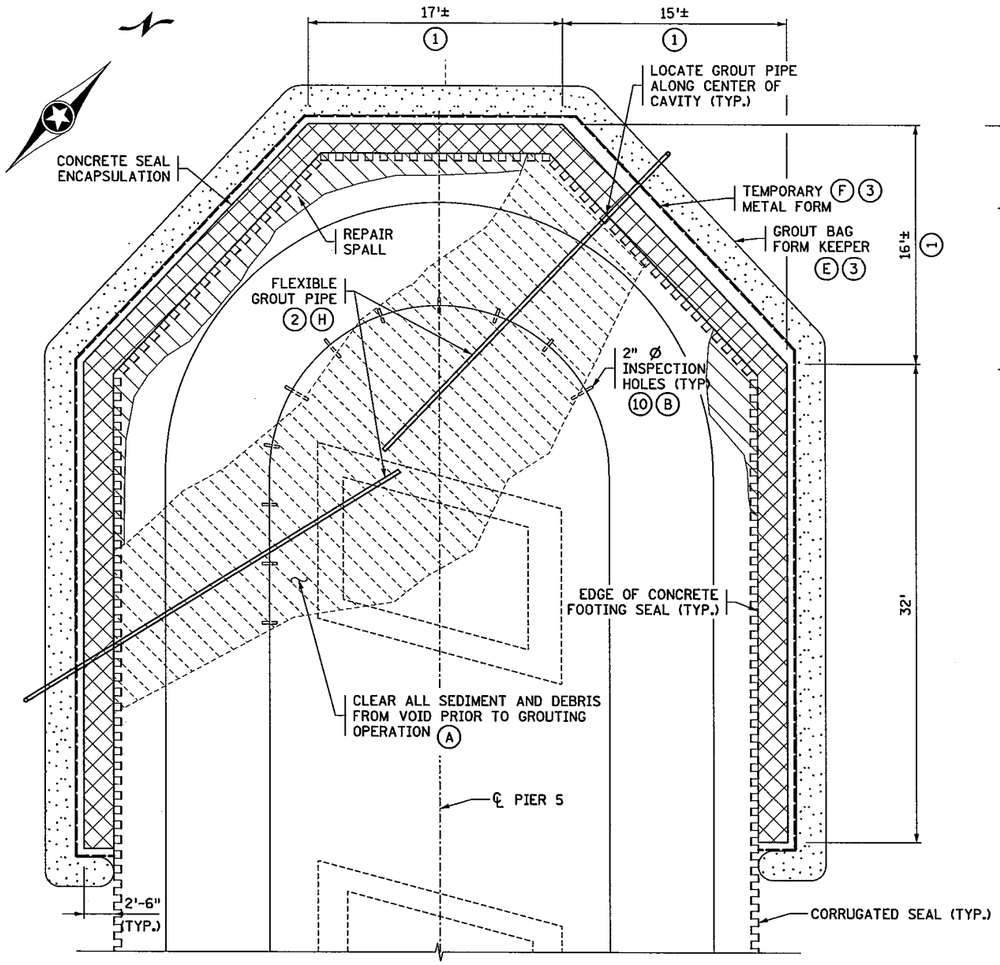

PARTIAL FOOTING PLAN VIEW

(PIER 5 SHOWN)
(NOT TO SCALE)

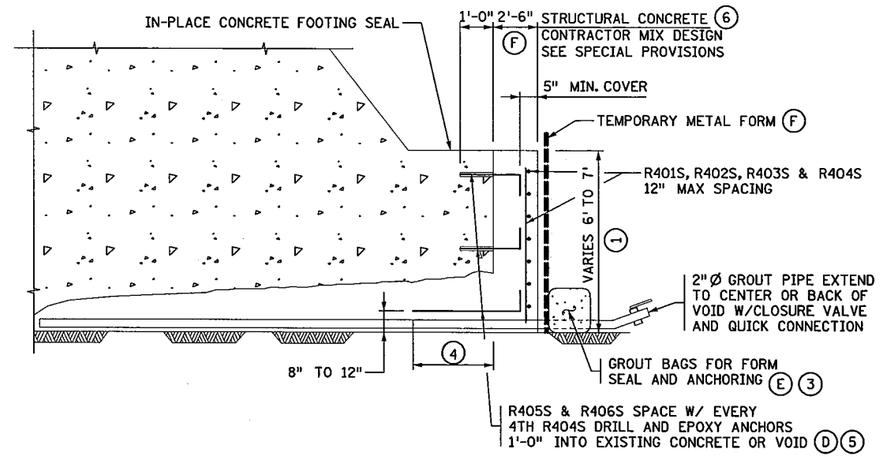

RECONSTRUCT FOUNDATION TYPE 2 DETAIL

(NOT TO SCALE)

NOTES:

REPAIR SPALL AREAS IN CONCRETE SEAL PRIOR TO CASTING ENCAPSULATION.

(1) THIS DIMENSION TIED TO THE CONCRETE FOOTING SEAL DIMENSION, VERIFY IN THE FIELD.

(2) GROUT TO BE PUMPED FROM CENTER OF VOID OUTWARDS

(3) GROUT BAGS OR ENCAPSULATION FORMING SHALL NOT BE INSTALLED UNTIL ENGINEER REVIEWS AND APPROVES VOID IS ADEQUATELY CLEARED OF SEDIMENT AND DEBRIS. ALL CLEANING AND DEBRIS REMOVAL TO BE PAID FOR AS "REMOVE MISCELLANEOUS DEBRIS".

(4) EXTEND LESSER OF 3' OR VOID PENETRATION. MINIMUM ANCHORAGE EMBEDMENT IS 12".

(5) FIELD TRIM R406S AS NECESSARY.

(6) PAID FOR UNDER "RECONSTRUCT FOUNDATION TYPE 2".

(7) REINFORCEMENT BARS PLUS DRILLING AND INSTALLING INCLUDED IN PAYMENT FOR "GROUTED REINF BARS (STAINLESS STEEL)".

(8) BEND AND/OR CUT TO LENGTH IN FIELD.

(9) SEE SPECIAL PROVISIONS FOR ESTIMATED QUANTITY INCLUDED IN LUMP SUM.

(10) DRILL A MINIMUM OF 11 HOLES SPACED AT ABOUT 4'. APPROXIMATE LENGTH = 17' EACH. PAYMENT FOR DRILLING IS INCIDENTAL TO "RECONSTRUCT FOUNDATION TYPE 2".

R405S, R406S, R409S & R410S (7)

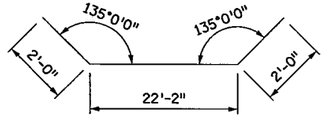

R402S

SUMMARY OF QUANTITIES FOR PIER 5

(9)	REMOVE MISCELLANEOUS DEBRIS	0.5	LUMP SUM
(6)	REINFORCEMENT BARS (STAINLESS STEEL)	1230	POUND
(9)	RECONSTRUCT FOUNDATION TYPE 2	1	LUMP SUM
	GROUTED REINF BARS (STAINLESS STEEL)	102	EACH
	CONCRETE SURFACE REPAIR TYPE 1	15	SQ. FT.
	CONCRETE SURFACE REPAIR TYPE 2	2	SQ. FT.

BILL OF REINFORCEMENT FOR RECONSTRUCT FOUNDATION TYPE 2

	BAR	NO	LENGTH	SHAPE	LOCATION
	R401S	14	32'-1"	——	PIER 5 - FOOTING HORIZONTAL
	R402S	14	26'-2"	⌣	PIER 5 - FOOTING HORIZONTAL
	R403S	7	17'-2"	——	PIER 5 - FOOTING HORIZONTAL
	R404S	128	6'-10"	——	PIER 5 - FOOTING VERTICAL
(7)	R405S	64	3'-10"	⌊	PIER 5 - HORIZONTAL DOWEL
(7)	R406S	32	5'-10"	⌊	PIER 5 - HORIZONTAL DOWEL

CONSTRUCTION SEQUENCE FOR UNDERWATER CONSTRUCTION:

(A) CLEAN VOID AND REMOVE ALL SEDIMENT TO SOLID LIMESTONE AROUND FOOTING.

(B) CORE DRILL NOMINAL 2" DIAMETER HOLES ON ANGLE ON THE PIER AND VERTICALLY ON THE FOOTING AS SHOWN ON DRAWINGS AND DIRECTED IN THE FIELD, AND EXTEND CASING 2' MINIMUM ABOVE THE WATER SURFACE. IF HOLE DOES NOT HIT VOID DRILLING TO STOP AT BEDROCK.

(C) INSPECT VOID AND REMOVE ORGANIC MATERIAL, SAND, DRILL CUTTINGS, AND LOOSE/UNSOUND CONCRETE. REPORT CONDITION TO MNDOT FOR VERIFICATION DIVE PRIOR TO PROCEEDING.

(D) INSTALL REINFORCEMENT AND DOWELS FOR CONCRETE ENCASEMENT. INSTALL HORIZONTAL GROUT TUBES AND VENT TUBES AT VOID ONLY.

(E) INSTALL GROUT BAGS OR OTHER APPROVED MATERIAL FOR CONCRETE ENCASEMENT WHILE LEAVING SPACE FOR ACCESS TO GROUT AND VENT TUBES IN VOID. GROUT BAGS SHALL BE A MINIMUM OF 3' HIGH WHEN FILLED WITH GROUT.

(F) PLACE METAL OR OTHER FORM MATERIAL FOR CONCRETE ENCAPSULATION TO TOP OF FOOTING. CREATE FORMED BLOCK-OUT AND TUNNEL AT THE LARGEST VOID OPENING TO THE VOID IN ORDER TO ADEQUATELY VENT SUBSEQUENT INTERIOR GROUTING.

(G) TREMIE OR PUMP CONCRETE INPLACE - KEEPING THE DISCHARGE OF THE CONCRETE WITHIN THE CONCRETE MASS BEING PLACED. WORK FROM SHALLOW UNDERCUT AREAS TOWARD LARGER UNDERCUT AREAS. CONCRETE SHALL NOT BE MIXED WITH THE SURROUNDING WATER.

REMOVE VENT BLOCK-OUT AND TUNNEL FORMS.

(H) AFTER THE CONCRETE HAS SET AND GAINED STRENGTH, PRESSURE GROUT VOID FROM HORIZONTAL GROUT PIPES AT A MINIMUM OF TWO SIDES OF FOOTING. BEGIN AT THE INTERIOR CENTER OF FOOTING AND EXTEND TOWARD THE PERIMETER. CARE SHALL BE TAKEN TO FILL THE ENTIRE VOID. CONTINUE PUMPING FROM THE HORIZONTAL GROUT PIPES UNTIL GROUT CAN BE OBSERVED EXCEEDING THE TOP OF VOID FROM THE CORED HOLES. GROUTING SHALL CONTINUE FROM THE HORIZONTAL GROUT TUBES AS LONG AS THE GROUTING OPERATION CONTINUES TO PROGRESS AND FILL THE VOIDS. RETRACT HORIZONTAL GROUT PIPES WHILE GROUTING, MAINTAINING VISUAL CONFIRMATION FROM THE VERTICAL CORE HOLES THAT GROUT ELEVATION EXCEEDS TOP OF VOID ELEVATION. GROUTING FROM VERTICAL CORED HOLES IS PERMITTED WHEN GROUT IS OBSERVED AT THE TOP OF THE VOID FOR THE RESPECTIVE VERTICAL CORE HOLE. WHEN GROUT IS WITHIN THICKNESS OF CONCRETE SEAL PERIMETER, PLACE GROUT BAGS AROUND VENT BLOCKOUT AND REDUCE VENTING TO TWO 2" DIAMETER VENT TUBES WITH SHUTOFF VALVES. CONTINUE GROUTING UNTIL GROUT COMES FROM VENT PIPE AT THE EDGE OF THE VOID. A DIVER SHALL BE PROVIDED TO OBSERVE THE VENT HOLES AND GROUT SHALL BE WASTED UNTIL NO WATER FLOWS FROM THE VENTS. AT THAT TIME ALL VENTS AND GROUT PIPES SHALL BE CLOSED. ALL OPEN CORE HOLES SHALL BE FILLED WITH GROUT.

(I) CORE DRILL A MINIMUM OF FOUR 2" Ø VERIFICATION CORES AT LOCATION APPROVED BY MNDOT. ALL CORE HOLES SHALL BE FILLED WITH GROUT. IN THE EVENT SIGNIFICANT VOIDS ARE ESTABLISHED A SUPPLEMENTAL GROUTING OPERATION WILL BE REQUIRED. PAYMENT FOR CORING MADE INCIDENTAL TO "RECONSTRUCT FOUNDATION TYPE 2".

(J) REMOVE TEMPORARY WORKS EXCLUDING GROUT BAGS. CUT OFF ANY VENT PIPING AND REMOVE ANY METAL FORMS. PLACE ADDITIONAL GROUT BAGS COVERING FULL AREA OF VENTING BLOCK-OUT OR VENT TUBES.

DENOTES ENCAPSULATION CONCRETE

DENOTES CONCRETE SPALL AREAS

DENOTES POTENTIAL CONCRETE VOID

HDR Engineering, Inc.

CERTIFIED BY _____ LICENSED PROFESSIONAL ENGINEER 5/23/14 DATE

NAME: JACOB Z. BROMDER LIC. NO. 41848

TITLE: PIER 5 FOOTING REPAIR (1 OF 2)

DES: JL	DR: JN	APPROVED:
CHK: RJR	CHK: RJR	

SHEET NO. 11 OF 19 SHEETS

BRIDGE NO. 2440

untitled
2:52:37 PM
5/23/2014
\\mspa-prv1\ECGCAD$\standards\MNDOT_BR_V8\PLOTDRV\MNDOT.PLT
\\mspa-prv1\ECGCAD$\standards\MNDOT_BR_V8\PLOTDRV\PEN\MNDOT_BW.TBL
par:\\PWAPPDMA001\NorthCentral_Dmdms\Documents\007569\CONDD855500\00000000223061\13.00_CAD\Plan Sheets\3029

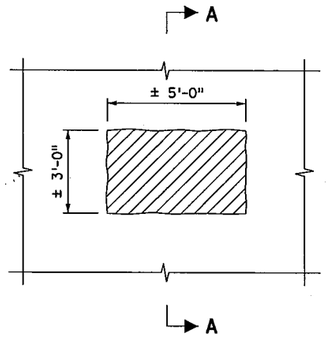

PLAN VIEW

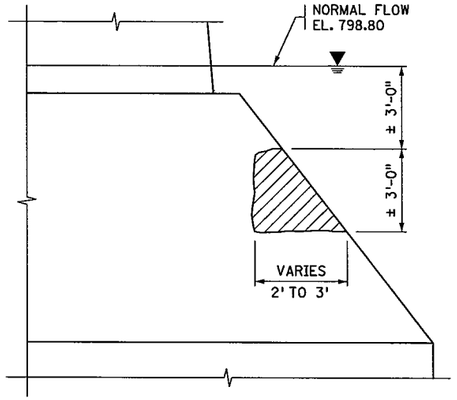

SECTION A-A

PIER 5 SURFACE REMOVALS

(FIELD VERIFY DIMENSIONS)

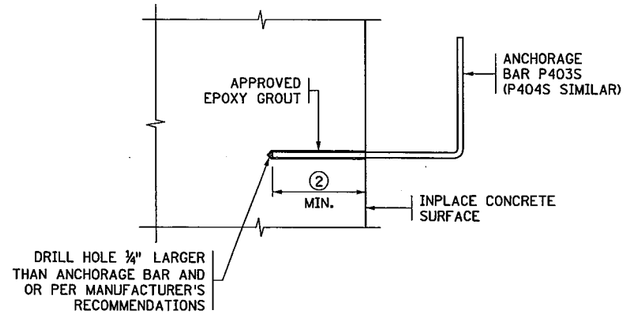

ANCHORAGE DETAIL

ESTIMATED QUANTITIES FOR RECONSTRUCT FOUNDATION TYPE 2 ④			
	STRUCTURAL CONCRETE	86	CU. YD.
⑤	HIGH MOBILITY GROUT	36	CU. YD.
⑥	CEMENT GROUT	1.8	CU. YD.

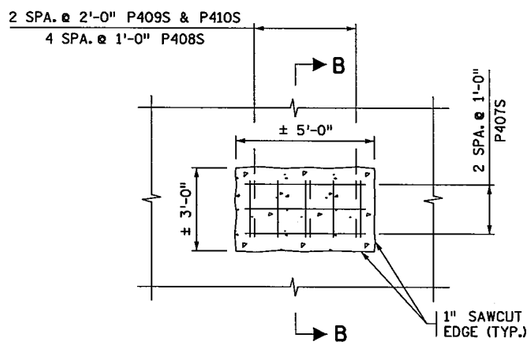

PLAN VIEW

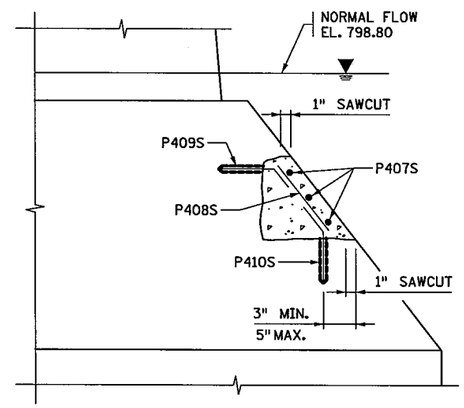

SECTION B-B

PIER 5 SURFACE REPAIRS

NOTES:

① REINFORCEMEMT BARS PLUS DRILLING AND INSTALLING INCLUDED IN PAYMENT FOR "GROUTED REINF BARS (STAINLESS STEEL)".

② 12" MINIMUM EMBEDMENT.

③ FIELD BEND TO MATCH FACE SLOPE.

④ NO COMPENSATION WILL BE PAID ABOVE LUMP SUM PRICE FOR CHANGE IN QUANTITIES EXCEPT AS NOTED IN ⑤. ESTIMATED QUANTITIES ARE BASED ON BEST AVAILABLE INFORMATION. ACTUAL QUANTITIES ARE TO BE DETERMINED BY CONTRACTOR IN FIELD AS NECESSARY TO EXECUTE REPAIRS SHOWN.

⑤ PRIMARY GROUTING OF VOID ESTIMATED.

⑥ QUANTITY OF SECONDARY GROUTING IS INCIDENTAL. SEE SPECIAL PROVISIONS FOR ADDITIONAL VOLUME PAYMENT TERMS.

DENOTES REMOVAL OF UNSOUND CONCRETE INCLUDED IN ITEM "CONCRETE SURFACE REPAIR TYPE ___".

DENOTES CAST-IN-PLACE CONCRETE REPAIR. INCLUDED IN ITEM "CONCRETE SURFACE REPAIR TYPE ___".

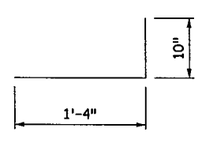

P403S

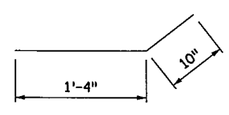

P404S ③①

BILL OF REINFORCEMENT FOR PIER 5 CONCRETE SURFACE REPAIR TYPE __					
	BAR	NO	LENGTH	SHAPE	LOCATION
	P407S	3	4'-8"	———	FOOTING HORIZONTAL
	P408S	5	2'-8"	———	FOOTING VERTICAL
①	P409S	3	2'-8"	└──	HORIZONTAL - DOWEL
③①	P410S	3	2'-8"	╲──	VERTICAL - DOWEL

HDR Engineering, Inc.

CERTIFIED BY [signature] 5/23/14
LICENSED PROFESSIONAL ENGINEER DATE
NAME: JACOB Z. BRONDER LIC. NO. 41848

TITLE: PIER 5 FOOTING REPAIR (2 OF 2)

DES: JL DR: JN APPROVED:
CHK: RJR CHK: RJR

SHEET NO. 12 OF 19 SHEETS

BRIDGE NO. 2440

untitled
2:52:40 PM
5/23/2014
\\mspe-srv1\ECGCADStandards\MNDOT_BR_V8I\PLOTDRV\MNDOT.PLT
\\mspe-srv1\ECGCADStandards\MNDOT_BR_V8I\PLOTDRV\PEN\MNDOT_BW.TBL
pw:\\PWAPPOMA001:NorthCentral_Omaha\Documents\007569\CON0085500\000000000223061\13.00_CAD\Plan Sheets\3030

Boring By: SOIL ENGINEERING SERVICES, INC. Minneapolis, Minnesota — Logged By: E. H. Anderson — Inspector: J. Murphy

LOG OF BORING

PROJECT: 68-80 3rd Avenue Bridge Minneapolis, Minnesota — BORING NO: ST-3-S — SHEET 1 OF 2

DATE OF BORING: STARTED: 4/11/68 COMPLETED: 4/16/68 — GROUND WATER: ___ HOURS AFTER DRILLING: ___ HOURS AFTER DRILLING: ___ HOURS AFTER DRILLING: ___ — LOCATION: STATION: ___ OFFSET: Pier 5

BORING TYPE: Rotary, CME 55 Rig

SAMPLER TYPE AND DATA: [X] SPLIT BARREL 1 3/8" I.D., 2" O.D. [U] UNDISTURBED SAMPLE [C] ROCK CORE NX Diamond Bit [A] AUGER [ ] OTHER

ELEVATION, FEET	SAMPLE & TYPE	SAMPLE NO.	STD. PENETRATION RESISTANCE, BLOWS/FT.	RECOVERY, in.	COMPRESSIVE STRENGTH, TSF, POCKET PENETROMETER	DRILLING DATA: RATE OF PENETRATION, TYPE AND SIZE OF BIT, TYPE OF CIRCULATION, OR CASING ADVANCE, TYPE OF DRILLING FLUID	CASING SIZE, TYPE, etc. HAMMER WEIGHT, FALL, HOLE OR CASING, WEIGHT OF HAMMER	SOIL DESCRIPTION AND REMARKS — CLASSIFICATION SYSTEM	ELEV. 799.8
2.5								Water	
5.0				60"				5'	794.8
7.5	C			100%				Concrete Footing	
10.0	C			60"					
12.5	C			100%					
15.0	C	6		18"					
17.5	C			58"				Charred Wood 15.5'	784.3
20.0	C			97%				Light grey mottled with dark grey Platteville Formation. (Lost water at 15.5' -- two short core runs taken)	
22.5	C			32"					
25.0	C			100%					
27.5	C	7		27"					
				100 in 0.4'	26" 98%				
30.0				180 in 0.3'	0"				
32.5				100 in 0.2'	0"				

Water used as drilling fluid

NX casing initially seated to 6.0'. Last core run began inside casing, lost water at 15.5' when wood mat then buried in split barrel sampler, reamed hole with 3 3/4" drag bit to 16' so last NX core run began in clean footing

24.7' 775.1

Bluish grey to yellowish brown Glenwood Formation 27' 772.8

*Classification below 27' on 28.7' 771.1

Very dense, greenish grey St. Peter Sandstone (Upper portions well cemented -- retained in core barrell)

36.7' 763.1

FORM NO. 173-3613 — HOWARD, NEEDLES, TAMMEN & BERGENDOFF

Boring By: SOIL ENGINEERING SERVICES, INC. Minneapolis, Minnesota — Logged By: P. H. Anderson — Inspector: J. Murphy

LOG OF BORING

PROJECT: 68-80 3rd Avenue Bridge Minneapolis, Minnesota — BORING NO: ST-3-S — SHEET 1 OF 2

DATE OF BORING: STARTED: 4/16/68 COMPLETED: 4/19/68 — GROUND WATER: ___ HOURS AFTER DRILLING: ___ HOURS AFTER DRILLING: ___ HOURS AFTER DRILLING: ___ — LOCATION: STATION: ___ OFFSET: Pier 5

BORING TYPE: Rotary, CME 55 Rig

SAMPLER TYPE AND DATA: [X] SPLIT BARREL 1 3/8" I.D., 2" O.D. [U] UNDISTURBED SAMPLE [C] ROCK CORE NX Diamond bit [A] AUGER [ ] OTHER

DEPTH-FEET	SAMPLE & TYPE	SAMPLE NO.	STD. PENETRATION RESISTANCE, BLOWS/FT.	RECOVERY, in.	COMPRESSIVE STRENGTH, TSF, POCKET PENETROMETER	DRILLING DATA: RATE OF PENETRATION, TYPE AND SIZE OF BIT, TYPE OF CIRCULATION, OR CASING ADVANCE, TYPE OF DRILLING FLUID	CASING SIZE, TYPE, etc. HAMMER WEIGHT, FALL, HOLE OR CASING, WEIGHT OF HAMMER	SOIL DESCRIPTION AND REMARKS — CLASSIFICATION SYSTEM	ELEV. 800.0
2.5								Water	
5.0								3'	797.0
7.5	C			60"				Concrete Footing (lower portions badly fractured and easier drilling -- possibly leaner concrete)	
10.0	C			100%					
12.5	C			57"					
15.0	C			96%					
17.5	C			47"					
20.0	C			78%					
22.5	C			60"					
25.0	C			100%					
27.5	C			57"					
30.0		8		100 in 0.4'	95%				
32.5									
35.0		9W		100 in 0.2'	0"				
37.5									
40.0		10W		100 in 0.2'	0"				

Water used as drilling fluid

Drilled pilot hole to 3.5' with drag bit to seat casing, NX casing advanced to 5.4' -- last NX core run began in casing.

17.5' 782.5

Light grey mottled with dark grey Platteville Formation

26.5' 773.5

Bluish grey to yellowish brown Glenwood Formation 28' 772.0

Very dense, brownish grey St. Peter Sandstone

(W indicates sample obtained from wash water)

40.3' 759.7

FORM NO. 173-3613 — HOWARD, NEEDLES, TAMMEN & BERGENDOFF

Boring By: SOIL ENGINEERING SERVICES, INC. Minneapolis, Minnesota — Logged By: P. H. Anderson — Inspector: J. Murphy

LOG OF BORING

PROJECT: 68-80 3rd Avenue Bridge Minneapolis, Minnesota — BORING NO: ST-3-S — SHEET 1 OF 2

DATE OF BORING: STARTED: 4/11/68 COMPLETED: 4/17/68 — GROUND WATER: ___ HOURS AFTER DRILLING: ___ HOURS AFTER DRILLING: ___ — LOCATION: STATION: ___ OFFSET: Pier 5

BORING TYPE: Rotary, CME 55 Rig

SAMPLER TYPE AND DATA: [X] SPLIT BARREL 1 3/8" I.D., 2" O.D. [U] UNDISTURBED SAMPLE [C] ROCK CORE NX Diamond Bit [A] AUGER [ ] OTHER

DEPTH-FEET	SAMPLE & TYPE	SAMPLE NO.	STD. PENETRATION RESISTANCE, BLOWS/FT.	RECOVERY, in.	COMPRESSIVE STRENGTH, TSF, POCKET PENETROMETER	DRILLING DATA: RATE OF PENETRATION, TYPE AND SIZE OF BIT, TYPE OF CIRCULATION, OR CASING ADVANCE, TYPE OF DRILLING FLUID	CASING SIZE, TYPE, etc. HAMMER WEIGHT, FALL, HOLE OR CASING, WEIGHT OF HAMMER	SOIL DESCRIPTION AND REMARKS — U.S. Bureau of Soils — CLASSIFICATION SYSTEM	ELEV. 799.8
2.5								Water	
5.0									
7.5									
10.0								*Loose, brown, Medium to Coarse Sand and Fine Gravel, wet	
12.5								14.5'	785.3
15.0	X	5	2	100in 0.2'				15'	784.8
17.5	C			62"				Light grey mottled with dark grey Platteville formation	
20.0	C			100%					
22.5									

Water used as drilling fluid

NX casing advanced by rotation

20.4' 779.2

FORM NO. 173-3613 — HOWARD, NEEDLES, TAMMEN & BERGENDOFF

untitled
11:27:44 AM
5/23/2014
\\sspe-srv1\ECGCADStandards\WNDOT_BR_V8i\PLOTDRV\WNDOT.PLT
\\sspe-srv1\ECGCADStandards\WNDOT_BR_V8i\PLOTDRV\PEN\WNDOT_BW.TBL
pw:\\PWAPPDMA001:NorthCentral.Dms\Documents\007569\CON0085500\{00000000022306}\13.00_CAD\Plan Sheets\3031

HDR Engineering, Inc.

TITLE: BORING LOGS 1

DES: JL	DR: JN	APPROVED:
CHK: RJR	CHK: RJR	

SHEET NO. 13 OF 19 SHEETS

BRIDGE NO. 2440

Boring By: SOIL ENGINEERING SERVICES, INC. Minneapolis, Minnesota Logged By: P.H. Anderson Inspector: J. Murphy

LOG OF BORING

PROJECT: 68-80 3rd Avenue Bridge Minneapolis, Minnesota BORING NO. ST-3-7 SHEET 1 OF 1

DATE OF BORING: STARTED: 4/30/68 COMPLETED: 5/1/68
BORING TYPE: Rotary CME 55 Rig
GROUND WATER: HOURS AFTER DRILLING: ___ HOURS AFTER DRILLING: ___ HOURS AFTER DRILLING: ___
LOCATION: STATION: OFFSET: Pier 5

SAMPLER TYPE AND DATA
- [X] SPLIT BARREL
- [U] UNDISTURBED SAMPLE
- [C] ROCK CORE — NX Diamond Bit
- [A] AUGER
- [ ] OTHER

DEPTH-FEET	SAMPLER & TYPE	SAMPLE NO.	SPT RESISTANCE, BLOWS/FT.	RECOVERY, IN	COMPRESSIVE STRENGTH, TSF; POCKET PENETROMETER	DRILLING DATA: BIT SIZE, TYPE, FLUID LOSS OR GAIN, LOCATION OF DRILLING FLUID	CASING SIZE, TYPE, etc., BLOWS PER FOOT, WEIGHT OF HAMMER	SOIL DESCRIPTION AND REMARKS — CLASSIFICATION SYSTEM	ELEV. 800.1
0								Water	
5									
10									
15									
								14.0'	786.1
								Sand -- not sampled	
								16.5'	783.6
20	C			60" / 100%				Light grey mottled with dark grey Platteville Limestone Formation (upper 1' fragmented)	
	C			50" / 92%		Water used as drilling fluid	NX casing seated by rotation to 17.0' -- first core run began in casing		
25								25.3'	774.8
								Bluish grey Glenwood Formation	
								28.5'	771.6

FORM NO. 73-223-3 HOWARD, NEEDLES, TAMMEN & BERGENDOFF

Boring By: SOIL ENGINEERING SERVICES, INC. Minneapolis, Minnesota Logged By: P.H. Anderson Inspector: J. Murphy

LOG OF BORING

PROJECT: 68-80 3rd Avenue Bridge Minneapolis, Minnesota BORING NO. ST-3-8 SHEET 1 OF 1

DATE OF BORING: STARTED: 5/1/68 COMPLETED: 5/1/68
BORING TYPE: Rotary CME 55 Rig
GROUND WATER: HOURS AFTER DRILLING: ___ HOURS AFTER DRILLING: ___ HOURS AFTER DRILLING: ___
LOCATION: STATION: OFFSET: Pier 5

SAMPLER TYPE AND DATA
- [X] SPLIT BARREL
- [U] UNDISTURBED SAMPLE
- [C] ROCK CORE — NX Diamond Bit
- [A] AUGER
- [ ] OTHER

DEPTH-FEET	SAMPLER & TYPE	SAMPLE NO.	SPT RESISTANCE, BLOWS/FT.	RECOVERY, IN	COMPRESSIVE STRENGTH, TSF; POCKET PENETROMETER	DRILLING DATA: BIT SIZE, TYPE, FLUID LOSS OR GAIN, LOCATION OF DRILLING FLUID	CASING SIZE, TYPE, etc., BLOWS PER FOOT, WEIGHT OF HAMMER	SOIL DESCRIPTION AND REMARKS — CLASSIFICATION SYSTEM	ELEV. 800.6
0								Water	
5									
10									
15								8.5'	791.5
								Sand -- not sampled	
								16.6'	783.4
20	C			60" / 100%				Light grey mottled with dark grey Platteville Formation	
	C			60" / 100%		Water used as drilling fluid	NX Casing seated by rotation to 17.0' depth -- first core run began in casing		
25								25.6'	774.4
								*Bluish grey Glenwood Formation	
								26.6'	773.4

FORM NO. 73-223-3 HOWARD, NEEDLES, TAMMEN & BERGENDOFF

Boring By: SOIL ENGINEERING SERVICES, INC. Minneapolis, Minnesota Logged By: P.H. Anderson Inspector: J. Murphy

LOG OF BORING

PROJECT: 68-80 3rd Avenue Bridge Minneapolis, Minnesota BORING NO. ST-3-9 SHEET 2 OF 3

DATE OF BORING: STARTED: 4/19/68 COMPLETED: 4/22/68
BORING TYPE: Rotary CME 55 Rig
GROUND WATER: HOURS AFTER DRILLING: ___ HOURS AFTER DRILLING: ___ HOURS AFTER DRILLING: ___
LOCATION: STATION: OFFSET: Pier 5

SAMPLER TYPE AND DATA
- [X] SPLIT BARREL 1 3/8" I.D. 2" O.D.
- [U] UNDISTURBED SAMPLE
- [C] ROCK CORE — NX Diamond Bit
- [A] AUGER
- [ ] OTHER

DEPTH-FEET	SAMPLER & TYPE	SAMPLE NO.	SPT RESISTANCE, BLOWS/FT.	RECOVERY, IN	COMPRESSIVE STRENGTH, TSF; POCKET PENETROMETER	DRILLING DATA: BIT SIZE, TYPE, FLUID LOSS OR GAIN, LOCATION OF DRILLING FLUID	CASING SIZE, TYPE, etc., BLOWS PER FOOT, WEIGHT OF HAMMER	SOIL DESCRIPTION AND REMARKS — CLASSIFICATION SYSTEM	ELEV. 799.6
0								Water	
5								7'	792.6
								Sand - not sampled	
10								16.5'	783.1
15								Light grey mottled with dark grey Platteville Formation (upper 1-foot fragmented)	
20	C			58" / 97%					
	C			59" / 98%		Water used as drilling fluid	NX casing seated by rotation to 16.5' -- first core run began in casing		
25	C			60" / 100%				25.6'	774.0
								Bluish grey to yellowish brown Glenwood Formation	27.7' 771.9
30		10	11/5	24" / 40%				Very dense, light grey mottled with brown, fr. Water Sandstone	
			50/0.3'	0.3'					
35			17/5.0"	5.0"				*Burned up NX Diamond Bit on last run due to soft shale plugging bit	
			50/0.3'	0.3'				36.5'	763.1

FORM NO. 73-223-3 HOWARD, NEEDLES, TAMMEN & BERGENDOFF

untitled
11:30:04 AM
5/23/2014
\\msp-srv1\ECCCADS\standards\MNDOT_BR_V8i\PLOTDRV\MNDOT.PLT
\\msp-srv1\ECCCADS\standards\MNDOT_BR_V8i\PLOTDRV\PEN\MNDOT_BW.TBL
pw:\\PWAPPOMA001:North Central Jacobs\Documents\D07569\CON00085500\V0000000000223061\13.00.CADVPlan Sheets\3033

HDR Engineering, Inc.

TITLE: BORING LOGS 2

DES: JL	DR: JN	APPROVED:	BRIDGE NO.
CHK: RJR	CHK: RJR		2440

SHEET NO. 14 OF 19 SHEETS

AMERICAN ENGINEERING TESTING, INC.

SUBSURFACE BORING LOG

AET JOB NO: 01-05995 LOG OF BORING NO. B-1 (p. 1 of 3)

PROJECT: 3rd Avenue Bridge; Minneapolis, MN

DEPTH IN FEET	SURFACE ELEVATION: 853.0 MATERIAL DESCRIPTION	GEOLOGY	N	MC	SAMPLE TYPE	REC IN.	FIELD & LABORATORY TESTS WC	REC %	RQD IN.	RQD %	%-#200
1	0-57.1' Set HW casing between bridge deck and ledge on bridge pier										
2											
3											
4											
5											
6											
7											
8											
9											
10											
11											
12											
13											
14											
15											
16											
17											
18											
19											
20											
21											
22											
23											
24											
25											
26											
27											
28											
29											
30											
31											

DEPTH:	DRILLING METHOD
0-57.1'	Set HW Casing
57.1-80'	HQ Coring
80-85	RD w/DM
HOLE COMPLETED:	4/10/14
DR: SS	LG: TK Rig: 41

WATER LEVEL MEASUREMENTS						
DATE	TIME	SAMPLED DEPTH	CASING DEPTH	CAVE-IN DEPTH	DRILLING FLUID LEVEL	WATER LEVEL

NOTE: REFER TO THE ATTACHED SHEETS FOR AN EXPLANATION OF TERMINOLOGY ON THIS LOG

AET_CORP 01-05995.GPJ AET+DPT+WELLSDT 4/8/14

03/2011 01-DHR-060

AMERICAN ENGINEERING TESTING, INC.

SUBSURFACE BORING LOG

AET JOB NO: 01-05995 LOG OF BORING NO. B-1 (p. 2 of 3)

PROJECT: 3rd Avenue Bridge; Minneapolis, MN

DEPTH IN FEET	MATERIAL DESCRIPTION	GEOLOGY	N	MC	SAMPLE TYPE	REC IN.	FIELD & LABORATORY TESTS WC	REC %	RQD IN.	RQD %	%-#200
33	0-57.1' Set HW casing between bridge deck and ledge on bridge pier *(continued)*										
34											
35											
36											
37											
38											
39											
40											
41											
42											
43											
44											
45											
46											
47											
48											
49											
50											
51											
52											
53											
54											
55											
56											
57	CONCRETE, horizontal cracks/weathering around 59.2', 59.4', 62.5', 63.6', 63.8', 64.2', 64.3', 64.4', 64.5', 64.6', 67.2', 67.3', 68.2', 68.4'	FILL			HQ	35		101			
58											
59											
60					HQ	60		100			
61											
62											
63											
64											
65											
66											
67					HQ	48		100			
68											
69	VOID										

AET_CORP 01-05995.GPJ AET+DPT+WELLSDT 4/8/14

03/2011 01-DHR-060

AMERICAN ENGINEERING TESTING, INC.

SUBSURFACE BORING LOG

AET JOB NO: 01-05995 LOG OF BORING NO. B-1 (p. 3 of 3)

PROJECT: 3rd Avenue Bridge; Minneapolis, MN

DEPTH IN FEET	MATERIAL DESCRIPTION	GEOLOGY	N	MC	SAMPLE TYPE	REC IN.	FIELD & LABORATORY TESTS WC	REC %	RQD IN.	RQD %	%-#200
71	LIMESTONE, light gray and gray, crinkley bedded	PLATTEVILLE FORMATION MIFFLIN MEMBER									
72	Weathering: Slightly weathered to fresh										
73	Fracturing: Slightly fractured				HQ	60		100	50	83	
74	Stratification: Very thinly bedded										
75	Hardness: Hard										
76											
77											
78	Weathering: Fresh	PLATTEVILLE FORMATION PECATONICA MEMBER			HQ	57		95	43.5	72	
79	Fracturing: Slightly fractured										
80	Stratification: Thinly bedded Hardness: Hard										
81	SHALE, gray	GLENWOOD FORMATION			SS	12					
82	SANDSTONE, light gray, fine grained	ST. PETER FORMATION									
83											
84											
85	END OF BORING Set VW piezometer at 84.5 feet (elevation 768.5 feet)										

AET_CORP 01-05995.GPJ AET+DPT+WELLSDT 4/8/14

03/2011 01-DHR-060

Untitled
2:52:59 PM
5/23/2014
\\mspe-srv1\EGCCADS+ondards\WNDOT_BR_V8I\PLOTDRV\WNDOT.PLT
\\mspe-srv1\EGCCADS+ondards\WNDOT_BR_V8I\PLOTDRV\PEN\WNDOT_BW.TBL
pw:\\PWAPPOMAC01:Northcentral.Omaha\Documents\007569\CON0085500\0000000022306\13.00.CADPlan Sheets\3035

HDR Engineering, Inc.

TITLE: BORING LOGS 3

DES: JL	DR: JN	APPROVED:
CHK: RJR	CHK: RJR	

SHEET NO. 15 OF 19 SHEETS

BRIDGE NO. 2440

CONCRETE WEARING COURSE

☐ LOW SLUMP

☐ OTHER _____
TYPE OR MANUFACTURER

EXPANSION JOINTS

JOINT MANUFACTURER

MANUFACTURER'S IDENTIFICATION _____
MFR'S No. AND/OR LETTER DESIGNATION FOR JOINT USED

GLAND MANUFACTURER _____
NAME AND ADDRESS (CITY, STATE)

SIZE OF GLAND _____

MANUFACTURER'S IDENTIFICATION _____
MFR'S No. AND/OR LETTER DESIGNATION FOR GLAND USED

ELASTOMERIC BEARING PADS

PAD MANUFACTURER _____
NAME AND ADDRESS (CITY, STATE)

SPECIAL SURFACE FINISH

SYSTEM: _____ COLOR: _____

FINISHING ROADWAY FACES OF BARRIER RAILING

TYPE: _____ COLOR: _____

ANTI-GRAFFITI COATING

MANUFACTURER _____
NAME AND ADDRESS (CITY, STATE)

PRODUCT NAME: _____ LOCATION: _____

PAINT SYSTEM

Mn/DOT SPECIFICATION NUMBER _____
2478 OR 2479 OR OTHER

MANUFACTURER _____
NAME AND ADDRESS (CITY, STATE)

PRIME COAT _____
Mn/DOT MATERIAL SPECIFICATION NUMBER

INTERMEDIATE COAT _____
Mn/DOT MATERIAL SPECIFICATION NUMBER

FINISH COAT _____ _____
Mn/DOT MATERIAL SPECIFICATION NUMBER COLOR

PLAN QUALITY

RATE 1 (AGREE), 2 (NEUTRAL), OR 3 (DISAGREE, PLEASE COMMENT BELOW)

DIMENSIONING AND DETAILING ADEQUATELY DESCRIBED REQUIRED CONSTRUCTION. _____

BAR LISTS AND QUANTITIES WERE TYPICALLY COMPLETE AND FREE OF ERRORS. _____

SCALE OF DRAWINGS AND OVERALL LEGIBILITY OF LINES AND TEXT WAS GOOD. _____

(SB) SPECIAL PROVISIONS ADEQUATELY DESCRIBED SPECIAL WORK AND PAYMENT. _____

COMMENTS: _____

NUMBER OF BRIDGE SUPPLEMENTAL AGREEMENTS: _____ COST: $ _____

LIST SIGNIFICANT ERRORS OR OMISSIONS IN PLAN DETAILS OR PAY QUANTITIES IN THE SPACE PROVIDED AT RIGHT.

BRIDGE REMOVAL / BRIDGE OPENING

NUMBER OF AND DATE OLD BRIDGE WAS REMOVED (IF APPLICABLE):

BRIDGE NUMBER _____ DATE REMOVED _____

DATE NEW BRIDGE WAS OPENED TO TRAFFIC _____

NOTIFY THE BRIDGE OFFICE BRIDGE MANAGEMENT UNIT WITH THIS INFORMATION AS SOON AS POSSIBLE. (651) 366-4557

OTHER ITEMS ①

① UTILITIES ADDED DURING CONSTRUCTION AND SPECIALTY ITEMS.

FINAL QUANTITIES ENTERED ON SCHEDULE OF QUANTITIES: YES ☐ NO ☐

SUMMARY OF SIGNIFICANT AS-BUILT CHANGES

THE AS-BUILT INFORMATION WAS ADDED TO THE PLAN BY:

_____ _____
INSPECTOR(S) SIGNATURE DATE

CHECKED BY: _____ _____
PROJECT ENGINEER/SUPERVISOR SIGNATURE DATE

AT THE TIME OF THE FINAL, THIS COMPLETED AS-BUILT BRIDGE DATA SHEET MUST BE SUBMITTED TO THE BRIDGE OFFICE - ATTN: REGIONAL CONSTRUCTION ENGINEER (MS610).

REVISION: 10-28-2008

APPROVED: SEPTEMBER 26, 2003

STATE BRIDGE ENGINEER

AS-BUILT DETAILS
(AS NEEDED)

HDR Engineering, Inc.

TITLE: AS-BUILT BRIDGE DATA

DES: DR: CHK: CHK: APPROVED:

SHEET NO. 16 OF 19 SHEETS

FIG. 5-397.900

BRIDGE NO. 2440

untitled
2:53:11 PM
5/23/2014
\\mspe-srv1\ECGCADStandards\MNDOT_BR_V8i\PLOTDRV\MNDOT.PLT
\\mspe-srv1\ECGCADStandards\MNDOT_BR_V8i\PLOTDRV\PEN\MNDOT_BW.TBL
pw:\\PWAPPOMA001:NorthCentral_Omaha\Documents\007569\CON0085500\000000000223061\13.00_CAD\Plan Sheets\5001

3RD AVENUE BRIDGE REPAIR PROJECT SP 2710-244OB
STORM WATER POLLUTION PREVENTION PLAN (SWPPP) NARRATIVE

PROJECT DESCRIPTION/LOCATION

SP 2710-244OB IS LOCATED ON T.H. 65 (3RD AVENUE) IN THE CITY OF MINNEAPOLIS IN HENNEPIN COUNTY.

THE SCOPE OF THE 3RD AVENUE BRIDGE REPAIR PROJECT INCLUDES THE FOLLOWING:

THE THIRD AVENUE BRIDGE REPAIR WORK INCLUDE REPAIR OF DETERIORATED SURFACE CONCRETE NEAR THE WATER LINE OF THE PIERS AND FOUNDATION WORK TO REPAIR OF VOIDS NEAR BASE OF THE PIERS. THE CONCRETE SURFACE REPAIR IS AT PIERS 1, 2, AND 5. THIS WORK INVOLVES REMOVING DETERIORATED AND POOR QUALITY CONCRETE FROM THE VERTICAL FACE OF EACH PIER, DRILLING INTO THE PIER CONCRETE AND INSTALLING ANCHORAGES, PLACEMENT OF A MATT OF REINFORCEMENT, AND PLACING NEW CONCRETE TO FORM A NEW REPAIRED SURFACE.

THE FOUNDATION WORK AT PIERS 1 AND 5 WILL INVOLVE ENCAPSULATING THE DAMAGED AREA AND FOR PIER 5 GROUTING THE VOID. THE ENCAPSULATING EFFORT INCLUDES REMOVING POOR QUALITY CONCRETE AND SEDIMENT FROM THE VOID AND SPALLS, INSTALL ANCHORAGES INTO THE EXISTING CONCRETE, INSTALLING GROUT BAGS TO FACILITATE ENCAPSULATION, TYING A VERTICAL MAT OF REINFORCEMENT TO THE ANCHORAGES, AND CASTING CONCRETE (DESIGNED TO NOT DISPERSE IN WATER) INTO THE FORMED ENCAPSULATION.

FOR REPAIRING THE VOID BELOW PIER 5 AN ADDITIONAL STEP WILL TAKE PLACE AFTER THE ENCAPSULATION CONCRETE HAS CURED. THIS WILL INVOLVE DRILLING HOLES 2" OR 3" DIAMETER HOLES FROM THE TOP OF THE FOOTING INTO THE VOID AREA. THESE HOLES WILL FACILITATE PRESSURE GROUTING VOIDS AND OTHER CONCRETE FRACTURES AT THE CONCRETE FOOTING-BEDROCK INTERFACE. THE INSTALLATION OF THE CONCRETE ENCAPSULATION STRUCTURE IS DESIGNED TO CREATE A SEAL AROUND THE FOOTING THAT RESTRICTS GROUT FROM EXITING THE FOUNDATION INTO THE RIVER DURING THIS OPERATION.

THE WORK DESCRIBED IS PLANNED TO BE STAGED BY BARGE WITH INTERMITTENT USE OF THE BRIDGE DECK ABOVE TO CONVEY SOME MATERIALS. THE CONTRACTOR MAY INSTALL A TEMPORARY SCAFFOLD AROUND THE PIERS WHILE WORKING ON THE SURFACE REPAIRS WHICH WILL AID IN MATERIAL RECOVERY AND REDUCE FIELD PERSONNELS RELIANCE ON UNDERWATER DIVING EQUIPMENT.

SEDIMENT AND DEBRIS REMOVAL WILL INVOLVE JETTING AND VACUUM EQUIPMENT AND SEDIMENT BAGS. ALL SEDIMENT REMOVED SHALL BE CONTAINED WITHIN A COFFERDAM OR OTHER APPROVED CONTAINMENT METHOD AND FOLLOWING REMOVAL, BE TREATED THROUGH THE SETTLEMENT SYSTEM LOCATED ON THE BARGE. WORK SHALL NOT NEGATIVELY IMPACT THE VISUAL QUALITY OF THE WATER AT THE MILL RUINS PARK TAILRACE. HYDROPOWER GENERATORS DOWNSTREAM SHOULD NOT EXPERIENCE ANY REDUCTION IN POWER GENERATION OR DAMAGE FROM THE PROJECT.

PROJECT SCHEDULE (ANTICIPATED)

ESTIMATED CONSTRUCTION START DATE: AUGUST 2014
ESTIMATED CONSTRUCTION END DATE: DECEMBER 2014

SWPPP TRAINING REQUIREMENTS

THIS SWPPP WAS PREPARED BY HDR ENGINEERING PERSONNEL THAT ARE CERTIFIED IN THE DESIGN OF CONSTRUCTION SWPPPS. COPIES OF THE CERTIFICATIONS ARE ON FILE WITH HDR ENGINEERING AND ARE AVAILABLE UPON REQUEST. THE CONTRACTOR SHALL ENSURE THAT THE TRAINING REQUIREMENTS IN PART III.A.2 OF THE GENERAL STORMWATER PERMIT FOR CONSTRUCTION ACTIVITIES ARE MET, AND TRAINING RECEIVED WILL BE RECORDED IN THE SWPPP BEFORE THE START OF CONSTRUCTION OR AS SOON AS PERSONNEL FOR THE PROJECT HAVE BEEN DETERMINED. THE INDIVIDUALS WHO MUST BE TRAINED INCLUDE:

- INDIVIDUAL(S) OVERSEEING THE IMPLEMENTATION OF, REVISING, AND AMENDING THE SWPPP AND INDIVIDUAL(S) PERFORMING INSPECTIONS. ONE OF THESE INDIVIDUAL(S) WILL BE AVAILABLE FOR AN ONSITE INSPECTION WITH 72 HOURS UPON REQUEST BY THE MPCA.
- INDIVIDUAL(S) PERFORMING OR SUPERVISING THE INSTALLATION, MAINTENANCE AND REPAIR OF BMPS. AT LEAST ONE INDIVIDUAL ON A PROJECT MUST BE TRAINED IN THESE JOB DUTIES.

ENVIRONMENTALLY SENSITIVE AREAS

THE MISSISSIPPI RIVER IS A MINNESOTA DNR PUBLIC WATER.

THIS PROJECT IS NOT LOCATED IN A WELLHEAD PROTECTION AREA.

THE PROJECT AREA INCLUDES WETLAND AREAS WITHIN CONSTRUCTION LIMITS AND ADJACENT AREAS. CONTRACTOR SHALL TAKE PRECAUTIONS TO PROTECT WETLANDS AND AVOID ANY IMPACTS TO WETLAND AREAS, INCLUDING AREAS WITHIN CONSTRUCTION LIMITS AND ADJACENT AREAS.

SOIL TYPES

SEE THE PROJECT PLAN AND RID FOR SOIL AND SOIL BORING INFORMATION.

LAND FEATURE CHANGES

TOTAL DISTURBED AREA	0.00 ACRES

LONG TERM OPERATION AND MAINTENANCE

MNDOT IS RESPONSIBLE FOR THE LONG TERM OPERATION AND MAINTENANCE OF THE PERMANENT DRAINAGE SYSTEM WITHIN MNDOT ROW.

THE CITY OF MINNEAPOLIS SEWER DEPARTMENT WILL BE RESPONSIBLE FOR OPERATION AND MAINTENANCE OF ALL OTHER DISTURBED STORM DRAINAGE SYSTEMS NOT OPERATED BY MNDOT. THE CITY AND MNDOT HAVE DEVELOPED A MAINTENANCE AGREEMENT THAT IDENTIFIES WHICH AGENCY IS RESPONSIBLE FOR MAINTENANCE.

ENVIRONMENTAL CONTACTS AND RESPONSIBILITIES

THE CONTRACTOR IS RESPONSIBLE FOR IMPLEMENTATION OF THE SWPPP, WHICH INCLUDES THE INSTALLATION, INSPECTION, AND MAINTENANCE OF THE EROSION PREVENTION AND SEDIMENT CONTROL BMPS BEFORE AND DURING CONSTRUCTION. THE CONTRACTOR SHALL PREVENT AND AVOID POLLUTION OF NATURAL RESOURCES OF AIR, LAND AND WATER IN ACCORDANCE WITH THE RULES, REGULATIONS, AND STANDARDS ADOPTED AND ESTABLISHED BY THE MINNESOTA POLLUTION CONTROL AGENCY (MPCA), IN ACCORDANCE WITH THE SPECIAL PROVISIONS TO MNDOT STANDARD CONSTRUCTION SPECIFICATION SECTION 1717. THE CONTRACTOR SHALL REDUCE THE AREA OF DISTURBANCE TO A MINIMUM AT ALL TIMES TO REDUCE THE POTENTIAL FOR A PERMIT VIOLATION. THE CONTRACTOR IS ENCOURAGED TO MINIMIZE WORK DURATIONS OF TEMPORARY ACTIVITIES SO PERMANENT TURF ESTABLISHMENTS MAY BE PLACED AS SOON AS PRACTICABLE.

THE CONTRACTOR IS A CO-PERMITEE WITH MNDOT TO ENSURE COMPLIANCE WITH THE TERMS AND CONDITIONS OF THE GENERAL STORMWATER PERMIT (MN R100001), AND IS RESPONSIBLE FOR THOSE PORTIONS OF THE PERMIT WHERE THE OPERATOR IS REFERENCED.

THE CONTRACTOR SHALL DESIGNATE A CERTIFIED EROSION CONTROL SUPERVISOR WHO IS EITHER A RESPONSIBLE EMPLOYEE OF THE CONTRACTOR AND/OR DULY AUTHORIZED BY THE CONTRACTOR TO REPRESENT THE CONTRACTOR ON ALL MATTERS PERTAINING TO THE NPDES CONSTRUCTION STORMWATER PERMIT COMPLIANCE. THE EROSION CONTROL SUPERVISOR IS INCIDENTAL.

THE EROSION CONTROL SUPERVISOR SHALL HAVE AUTHORITY OVER ALL CONTRACTOR OPERATIONS WHICH INFLUENCE NPDES PERMIT COMPLIANCE INCLUDING GRADING, EXCAVATION, REMOVALS, TEMPORARY CONNECTIONS, UTILITY WORK, STAGING, TRAFFIC CONTROL, BACKFILLING AND COMPACTION, TEMPORARY PAVING, AND ANY OTHER OPERATIONS THAT INCREASE THE EROSION POTENTIAL ON THE PROJECT. THE EROSION CONTROL SUPERVISOR IS RESPONSIBLE FOR COORDINATING THE EROSION PREVENTION AND SEDIMENT CONTROL BMPS AND NOTIFYING THE NECESSARY PERSONNEL FOR REPAIRS AND MAINTENANCE. MEMBERS OF MNDOT'S OFFICE OF ENVIRONMENTAL SERVICES ARE ALSO AVAILABLE FOR ASSISTANCE.

THE CONTRACTOR SHALL NOT START ANY WORK UNTIL THE UPDATED SWPPP HAS BEEN APPROVED AND ACCEPTED BY THE PROJECT OVERSIGHT TEAM. THE CONTRACTOR SHALL INSTALL REQUIRED BMPS PRIOR TO BEGINNING ANY WORK.

IN THE EVENT OF AN ACCIDENTAL SEDIMENT DISCHARGE TO WATERS OF THE STATE, OR ANY DISCHARGE OF HAZARDOUS MATERIAL OF REPORTABLE QUANTITY, CONTACT THE MPCA STATE DUTY OFFICER AT 1-800-422-0798 FOR 24-HOUR EMERGENCY NOTIFICATION.

ENVIRONMENTAL CONTACT LIST

NAME	AGENCY	PERMIT	POSITION	CONTACT
JIM BRIST	MPCA	401 WATER QUALITY CERT	WATER QUALITY	651-757-2245
STATE DUTY OFFICER	MPCA	——	——	651-649-5451 800-422-0798
TIM NELSON	MNDOT	——	CONSTRUCTION ENGINEER	651-366-5136
CAROLYN ADAMSON	MNDOT	——	WATER RESOURCE ENGINEER	651-234-7526
JACK YUZNA	CITY OF MINNEAPOLIS	——	BRIDGE ENGINEER	612-673-2415
PETER LEETE	MN DNR	DNR PUBLIC WATERS	MNDNR/MNDOT LIAISON	651-366-3634
MELISSA JENNY	ARMY CORPS OF ENGINEERS	404/10	REGULATORY PROJECT MANAGER	651-290-5363
ERIC WASHBURN	UNITED STATES COAST GUARD	SECTION 9	——	314-269-2378

AMENDMENT PROCEDURES

THE EROSION AND SEDIMENT CONTROL SUPERVISOR AND SWPPP DESIGNER SHALL AMEND THE SWPPP WHENEVER THE FOLLOWING OCCUR:

- THERE IS A CHANGE IN CONSTRUCTION ACTIVITIES OR OPERATIONS THAT MAY AFFECT POLLUTANTS IN STORMWATER RUNOFF WITHIN AND DISCHARGING FROM A CONSTRUCTION SITE.
- THERE IS A VIOLATION OF THE GENERAL STORMWATER PERMIT FOR CONSTRUCTION ACTIVITY (MNR100001).
- WHEN DEEMED NECESSARY BY MNDOT.
- WHEN DEEMED NECESSARY BY THE CITY OF MINNEAPOLIS
- WHEN DEEMED NECESSARY BY THE MPCA, CORPS OF ENGINEERS, OR DNR.

THE AMENDMENTS SHALL BE STAND-ALONE DOCUMENTS THAT SHALL BE KEPT WITH THE SWPPP. THE FOLLOWING ITEMS SHALL BE INCLUDED IN EACH AMENDMENT:

- PERSON REQUESTING AMENDMENT.
- PERSON PREPARING AMENDMENT.
- REASON FOR PREPARATION OF AMENDMENT.
- SITE MAP SHOWING THE RELEVANT SITE FEATURES AND BMP LOCATIONS.
- DESCRIPTION OF THE EXISTING AND PROPOSED BMPS.

THE FOLLOWING TABLE STRUCTURE SHALL BE UTILIZED TO TRACK SWPPP AMENDMENTS PREPARED, AND WILL INCLUDE THE AMENDMENT NUMBER, DATE, BRIEF DESCRIPTION OF THE AMENDMENT, AND WHO PREPARED THE AMENDMENT. THE TABLE SHALL BE UPDATED AS AMENDMENTS ARE ADDED TO THE SWPPP. ALL SWPPP AMENDMENTS SHALL BE APPROVED BY MNDOT PRIOR TO STARTING CONSTRUCTION ACTIVITIES.

THE EROSION AND SEDIMENT CONTROL SUPERVISOR OR HIS/HER DESIGNEE SHALL DISTRIBUTE ALL SWPPP AMENDMENTS, VIA A DISTRIBUTION LIST, TO THE RELEVANT ONSITE SUPERINTENDENTS. THE EROSION AND SEDIMENT CONTROL SUPERVISOR OR THEIR DESIGNEE SHALL EDUCATE THE ONSITE SUPERINTENDENTS ABOUT THE CONTENT OF THE AMENDMENTS AND HOW IT MAY AFFECT THEIR WORK ZONE BEFORE CONSTRUCTION ACTIVITIES ARE PERFORMED.

AMENDMENT NO.	DATE	BRIEF DESCRIPTION OF AMENDMENT	PREPARED BY	APPROVED BY

LOCATION OF SWPPP REQUIREMENTS

THE REQUIRED SWPPP ELEMENTS MAY BE LOCATED IN MANY PLACES WITHIN THE PLAN AS WELL AS IN THE SPECIAL PROVISIONS, MN/DOT SPEC BOOK (2014 EDITION), OR ON FILE WITH MN/DOT.

LOCATION OF SWPPP REQUIREMENTS IN PROJECT PLAN

DESCRIPTION	LOCATION
SITE MAP	SHEETS NO. 2
DIRECTION OF FLOW	SHEETS NO. 10

TIMING OF BMP INSTALLATION

THE EROSION PREVENTION, SEDIMENT CONTROL AND POLLUTION MANAGEMENT BMPS SHALL BE INSTALLED AS NECESSARY TO MINIMIZE AIR, LAND AND WATER POLLUTION FROM DISTURBED SURFACES AND CAPTURE SEDIMENTS AND OTHER POLLUTION ONSITE, AND SHALL MEET THE NPDES PERMIT PART IV CONSTRUCTION ACTIVITY REQUIREMENTS. THE FOLLOWING LIST WAS TAKEN FROM THE MNDOT SPECIFICATIONS, AND MODIFIED, AND ALSO DEFINES THE TIMING OF EROSION CONTROL MEASURES IN SPECIFIC AREAS.

1. SUFFICIENT PERSONNEL, EQUIPMENT, MATERIALS AND INCIDENTALS SHALL BE MOBILIZED WITHIN 24 HOURS OF A WRITTEN ORDER BY A MNDOT REPRESENTATIVE TO CONDUCT CORRECTIVE WORK AND INSTALL TEMPORARY EROSION CONTROL WORK IN THE CASE OF AN EMERGENCY AS DEFINED BY THE MNDOT SPECIFICATIONS.

I HEREBY CERTIFY THAT SHEETS 17 THROUGH 19 OF THIS PLAN WERE PREPARED BY ME OR UNDER MY DIRECT SUPERVISION AND THAT I AM A DULY LICENSED PROFESSIONAL ENGINEER UNDER THE LAWS OF THE STATE OF MINNESOTA
PRINT NAME: BRETT A. VOTH LICENSE # 49045
DATE: 5-16-14 SIGNATURE: Brett Voth
DESIGNER: BRETT A. VOTH

HDR Engineering, Inc.

TITLE: STORM WATER POLLUTION PREVENTION PLAN

DES: BAV	DR: BAV	APPROVED:
CHK: JZB	CHK: JZB	

SHEET NO. 17 OF 19 SHEETS

BRIDGE NO. 2440

untitled
11:42:48 PM
5/16/2014
\\mspe-srv1\ECGCADS1\ondards\MNDOT_BR_V8I\PLOTDRV\MNDOT.PLT
\\mspe-srv1\ECGCADS1\ondards\MNDOT_BR_V8I\PLOTDRV\PENMNDOT.TBL
pw:\\PWAPPOWA001:Nor+ThCentral.Documents\00759\SCN00895000000000022306\V13.00.CADD\Plan Sheets\4000

GENERAL SWPPP NOTES FOR CONSTRUCTION ACTIVITY

1. THE CONTRACTOR WILL DEVELOP A CHAIN OF COMMAND WITH ALL OPERATORS ON SITE TO ENSURE THAT THE SWPPP WILL BE IMPLEMENTED AND STAY IN EFFECT UNTIL THE CONSTRUCTION PROJECT IS COMPLETE AND THE ENTIRE SITE HAS UNDERGONE FINAL STABILIZATION.
2. THE CONTRACTOR WILL PREPARE A WRITTEN, NOT ORAL, WEEKLY SCHEDULE OF PROPOSED EROSION AND SEDIMENT CONTROL ACTIVITIES FOR THE PROJECT ENGINEER'S APPROVAL AS PER MN/DOT SPEC. 1717.2C.
3. THE CONTRACTOR WILL PREPARE AND SUBMIT A SITE PLAN FOR THE PROJECT ENGINEER'S APPROVAL AS PER MN/DOT SPEC. 1717.2D FOR CONCRETE MANAGEMENT, WORK IN ENVIRONMENTALLY SENSITIVE AREAS, AND ANY WORK THAT WILL REQUIRE DEWATERING. ALL SITE PLANS MUST BE SUBMITTED TO THE PROJECT ENGINEER IN WRITING. THE CONTRACTOR SHALL ALLOW A MINIMUM OF 7 DAYS FOR MN/DOT TO REVIEW AND APPROVE SITE PLAN SUBMITTALS. THE CONTRACTOR WILL NOT BE ALLOWED TO COMMENCE WORK FOR WHICH A SITE PLAN IS REQUIRED UNTIL APPROVAL HAS BEEN GRANTED BY THE PROJECT ENGINEER. THE CONTRACTOR WILL NOT BE GIVEN ANY EXTRA TIME IN THE CONTRACT DUE TO THE UNTIMELY SUBMITTAL OF A SITE PLAN.
4. THE CONTRACTOR IS RESPONSIBLE FOR CREATING AND FOLLOWING A WRITTEN DISPOSAL PLAN FOR ALL WASTE MATERIALS. THE PLAN WILL INCLUDE HOW THE MATERIAL WILL BE DISPOSED OF AND THE LOCATION OF THE DISPOSAL SITE. SUBMIT TO THE PROJECT ENGINEER.
5. THE EROSION PREVENTION AND SEDIMENT CONTROL BMPS SHALL BE PLACED AS NECESSARY TO MINIMIZE EROSION FROM DISTURBED SURFACES AND TO CAPTURE SEDIMENT ONSITE. ALL EROSION CONTROL MEASURE SHALL BE IN PLACE PRIOR TO COMMENCEMENT OF ANY REMOVAL WORK AND/OR GROUND DISTURBING ACTIVITES AND SHALL BE MAINTAINED UNTIL THE POTENTIAL FOR EROSION HAS BEEN ELIMINATED.
6. SEDIMENT DEPOSITS IN A WATER OF THE STATE MUST BE REMOVED WITHIN 7 DAYS.
7. SITE DRAINING ACTIVITIES OF TURBID OR SEDIMENT LADEN WATER WILL BE DISCHARGED TO SETTLEMENT TANKS OR SEDIMENT BAGS. WATER MUST BE TREATED BEFORE BEING DISCHARGED BACK INTO THE RECEIVING WATERS.
8. THE CONTRACTOR SHALL COMPLY WITH THE FOLLOWING MAINTENANCE REQUIREMENTS:
   A. TEMPORARY SEDIMENT BASINS MUST HAVE THE SEDIMENT REMOVED ONCE THE SEDIMENT HAS REACHED 1/2 THE STORAGE VOLUME WITHIN 72 HOURS OF DISCOVERY.
   B. TRACKED SEDIMENT MUST BE REMOVED WITHIN 24 HOURS OF DISCOVERY OF TRACKING ONTO PAVED SURFACES.
   C. ALL OTHER NON-FUNCTIONAL BMPS MUST BE REPAIRED, REPLACED, OR SUPPLEMENTED WIHIN 24 HOURS OF DISCOVERY.
   D. THE CONTRACTOR IS RESPONSIBLE FOR MAINTAINING ALL BMPS UNTIL WORK HAS BEEN COMPLETED AND THE SITE HAS GONE UNDER FINAL STABILIZATION.
9. PROVIDE PERIMETER CONTROLS AROUND ALL STOCKPILES.
10. WATER CONTAINMENT BOOM - INSTALL FLOATING WATER CONTAINMENT BOOM AROUND ALL AREAS WHERE WORK IS BEING DONE IN THE WATER. INSTALLATION SHALL BE COMPLETED PRIOR TO DISTURBANCE.
11. THE CONTRACTOR SHALL SUBMIT A BARGE LAYOUT PLAN THAT PROVIDES TOTAL CONTAINMENT OF THE WORK SURFACE FROM THE RIVER, A BARGE PERIMETER CONTAINMENT SYSTEM AND FILTER TREATMENT PORTALS TO TREAT STORM WATER DISCHARGE FROM THE SURFACE, SECONDARY CONTAINMENT OF ALL EQUIPMENT THAT COULD LEAK, SURFACE COVERS OF EXPOSED MATERIALS DURING PERIODS OF WORK SUSPENSION, INCLUDING OVERNIGHT, TURN RADIUS CAPTURE OF CLAM OR EXCAVATED MATERIALS TO TRANSPORT BARGES, ETC. AND A RAPID RESPONSE PROGRAM FOR LEAKS AND LOSS OF CHEMICALS, FLUIDS, AND SEDIMENTS.
12. THE CONTRACTOR MUST USE METHODS AND OPERATIONAL PROCEDURES THAT PREVENT CONCRETE DUST, PARTICLES, SAW CUT SLURRY, PLANING WASTE AND OTHER CONCRETE WASTES FROM LEAVING THE PROJECT SITE AND DEPOSITING IN SURFACE WATERS.
12. ALL SEDIMENT DISTURBED BY THE PROJECT SHALL BE REMOVED FROM THE SITE AND DISPOSED OF ACCORDING TO APPLICABLE CODES AND PERMITS. ALL WATERS DISCHARGED BACK INTO SURFACE WATERS MUST MEET WATER QUALITY SPECIFICATIONS DETAILED IN THE PROJECT DIVISION SB SPECIAL PROVISIONS.

BRIDGE PIER REPAIR WORK

ACCESS TO THE PIER LOCATIONS ANTICIPATED BY BARGE.

1. ANY COFFERDAMS USED ON THE PROJECT SHALL BE DEWATERED INTO IN-BARGE SETTLING TANKS OR DUMPSTERS.
2. IN-BARGE SETTLING TANKS SHALL BE PLACED OR CONSTRUCTED ON A BARGE. WATER FROM THE DEWATERING OF THE COFFERDAMS SHALL BE PUMPED INTO SETTLING TANKS. 2 OR MORE TANKS SHALL BE USED IN SERIES. FLOCCULANTS SHALL BE USED IN THE SECOND TANK TO INCREASE THE EFFECTIVENESS OF THE SETTLING. ONCE TREATED TO NO MORE THAN 25 NTU ABOVE RIVER BASELINE NTU'S AND 7.0 PH +/- PH (MEASURED HOURLY UNTIL DATA INDICATES NO CHANGE), WATER WILL BE DISCHARGED BACK TO RIVER. TANKS SHALL BE CLEANED OUT WHEN MORE THAN 1/3 FILLED WITH SILT. RELEASE RATE WILL BE CONTROLLED SUCH THAT SEDIMENT IS ACHIEVED. THE RELEASE RATE WILL DEPEND UPON THE TANK SIZE USED BY THE CONTRACTOR.

THIS WORK SHALL CONSIST OF PROVIDING, USING, AND MAINTAINING TEMPORARY DEWATERING DUMPSTERS DESIGNED FOR TREATING STORMWATER FROM CONSTRUCTION ACTIVITIES, AS PART OF MECHANICAL DEWATERING OPERATIONS, AND BASED ON SITE CONDITION CONSTRAINTS. THE CONTRACTOR WILL FURNISH COMMERCIALLY ENGINEERED DEWATERING DUMPSTERS TO BE KEPT OF PROJECT SITE AT ALL TIMES, FOR THE LIFE OF THE CONTRACT. THIS WORK SHALL BE DONE IN ACCORDANCE WITH THE APPLICABLE MN/DOT STANDARD SPECIFICATIONS, THE PLAN, AND THE FOLLOWING:

THE PORTABLE SEDIMENT CONTAINMENT SYSTEM IS COMMERCIALLY AVAILABLE FROM WIMCO.
799 THEIS DRIVE, SHAKOPEE, MN 55379
952-222-3055

THIS DEVICE WILL MEASURE 8 FOOT BY 20 FOOT, SIMILAR IN FORM TO A TRASH DUMPSTER, WITH ORIFICE ATTACHMENT PORTALS FOR DEWATERING HOSES, AND SEDIMENT CLEANOUT ACCESS. THE DEVICE WILL INCLUDE A GEOTEXTILE FILTER WALL FOLLOWED BY A REPLACEABLE FILTER MEDIA IN THE FORM OF SLASH MULCH, EXCELSIOR FIBERS, OR OTHER FILTER MEDIA, DEPENDING ON POLLUTANT LOAD. THE PORTABLE SEDIMENT CONTAINMENT SYSTEM WILL BE INSTALLED IN THE FIELD FOLLOWING MANUFACTURER'S RECOMMENDATIONS AND APPROVED SITE PLANS. THE PORTABLE SEDIMENT CONTAINMENT SYSTEM WILL BE SLIGHTLY TILTED SUCH THAT THE WATER WILL FLOW OVER THE INTERNAL WEIR, AND WILL BE PLACED ON A SLASH MULCH OR FILTER AGGREGATE OVER A SUITABLE GEOTEXTILE.

FAILURE TO PERFORM

IF THE CONTRACTOR FAILS TO PROVIDE OR USE THE DEWATERING DUMPSTERS TO TREAT SEDIMENT OR OTHER POLLUTANT CONTAINING GROUND OR STORMWATER, THE CONTRACTOR SHALL SUSPEND OPERATIONS, AND RELATED OPERATIONS, IF ORDERED BY THE PROJECT ENGINEER UNTIL THE ISSUE IS RESOLVED.

EROSION AND SEDIMENT CONTROL BMPS

THE NECESSARY EROSION AND SEDIMENT CONTROL CONSTRUCTION BMPS INCLUDE, BUT ARE NOT LIMITED TO:

1. STOCKPILE MANAGEMENT -THE CONTRACTOR SHALL DEVELOP A WRITTEN STOCKPILE MANAGEMENT PROGRAM THAT ADDRESSES THE FOLLOWING ITEMS RELATED TO STOCKPILES PLACED ON LAND OR ON A BARGE:
   A. ALL ACTIVE OR IN-ACTIVE PORTLAND CEMENT, CONCRETE RUBBLE, ASPHALT CONCRETE, ASPHALT RUBBLE, AGGREGATE BASE, ROADWAY SUBBASE, PRE-MIXED AGGREGATE, AND ASPHALT BINDER SHALL BE COVERED WITH PLASTIC OR COMPARABLE MATERIAL TO PREVENT WIND EROSION AND AIR POLLUTION. PERIMETER SUPER DUTY SILT FENCE WILL ALSO BE ESTABLISHED AS AN EROSION CONTROL MEASURE.
   B. THE CONTRACTOR SHALL BE RESPONSIBLE FOR STOCKPILE LOCATIONS. STOCKPILES WILL BE SHAPED TO FACILITATE STABILIZATION AND MINIMIZE EROSION. PLACE STOCKPILES NO CLOSER THAN 25 FEET FROM ANY DRIVEWAY OR CATCH BASIN. SUPER DUTY SILT FENCE SHALL BE INSTALLED AROUND THE PERIMETER OF ALL STOCKPILE AREAS.
   C. ALL SOIL STOCKPILES THAT REMAIN IN PLACE FOR 7 DAYS OR MORE WILL BE STABILIZED PER MNDOT SPECIFICATION 2575.3 RAPID STABILIZATION METHOD 3.
   D. AGGREGATE STOCKPILES WILL BE STABILIZED.
   E. IF RAPID STABILIZATION METHOD 3 CANNOT BE USED, THEN THE STOCKPILE SHALL BE COVERED WITH TARPS OR PLASTIC SHEETING AND WEIGHTED TO PREVENT DISPLACEMENT.
   F. IF TEMPORARY STOCKPILES ARE NECESSARY, CONTRACTOR SHALL ESTABLISH EROSION CONTROL MEASURES IN COMPLIANCE WITH MNDOT SPECS AND SWPPP REQUIREMENTS. THE COST ASSOCIATED WITH POTENTIAL TEMPORARY STOCKPILE EROSION PREVENTION MEASURES, INCLUDING MATERIAL, LABOR, AND EQUIPMENT, SHALL BE CONSIDERED INCIDENTAL.
   G. PROTECTION OF STOCKPILES IS REQUIRED THROUGHOUT CONSTRUCTION. REPAIR AND/OR REPLACE PERIMETER CONTROLS AND COVERS AS NEEDED TO KEEP THEM FUNCTIONING PROPERLY.
   H. STOCKPILES PLACED ON BARGES SHALL HAVE ALL NECESSARY PERIMETER CONTROLS TO REMAIN CONTAINED ON THE BARGE AND PREVENT SPILLING INTO SURFACE WATERS.
2. CONCRETE SLURRY, TRUCK AND MIXER WASHOUT
   A. A DESIGNATED WASHOUT AREA SHALL BE PROVIDED AT THE CONSTRUCTION SITE AND SHALL BE CLEARLY MARKED.
   B. THE WASHOUT SHALL BE CONSTRUCTED AND MAINTAINED TO PROVIDE SUFFICIENT IMPERVIOUS CONTAINMENT FOR ALL LIQUID AND CONCRETE WASTE GENERATED BY WASHOUT OPERATIONS.
   C. FOR EQUIPMENT THAT DOES NOT HAVE SELF-CONTAINED WASHOUT WATER STORAGE, CONCRETE WASHOUTS OF CONCRETE TRUCKS, CHUTES, PUMPS, MIXING PLANTS AND OTHER CONCRETE HANDLING EQUIPMENT SHALL BE WASHED OUT INTO A LEAK-PROOF CONTAINMENT FACILITY OF IMPERMEABLE LINER.
   D. THE WASHOUT AREAS MUST BE IDENTIFIED BY SIGNAGE AND MUST BE AT LEAST 200' FROM SITE PLAN REQUIREMENT AREAS OR ENVIRONMENTALLY SENSITIVE AREAS. AN ENGINEERED COLLECTION SYSTEM CAN ALSO BE USED IF IT IS APPROVED BY THE PROJECT ENGINEER.
   F. PROCESS WASTEWATER FROM GRINDING OR GROOVING OF CONCRETE SHALL BE COLLECTED AND TREATED AS CONCRETE WASH WATER AND PROPERLY DISPOSED. REFER TO THE PROJECT SWPPP DOCUMENT FOR MNDOT'S ACCEPTABLE DISPOSAL PROCEDURES OF CONCRETE WASHOUT.
   G. CONCRETE WASHOUT FACILITIES WILL BE PERIODICALLY INSPECTED AND EMPTIED/REMOVED FROM THE SITE WHEN NEARING CAPACITY TO PREVENT OVERFLOWS.
   H. THE SWPPP WILL BE AMENDED AS NEEDED FOR CONCRETE OPERATIONS AS THEY OCCUR.
3. VEHICLE MAINTENANCE
   A. ROUTINE MAINTENANCE OF VEHICLES SHALL OCCUR IN OFFSITE STAGING AREAS ONLY. NO ON-SITE VEHICLE MAINTENANCE IS ALLOWED, UNLESS IN AN ENGINEER-APPROVED SYSTEM.
   B. VEHICLE WASHING SHALL BE AVOIDED. IF WASHING IS NECESSARY, RUNOFF FROM THE WASHING SHALL BE CONTAINED IN A LINED SEDIMENT TRAP AND THE WASH WATER SHALL BE PROPERLY DISPOSED OF AT A TREATMENT FACILITY.
   C. ENGINE DEGREASING SHALL ALSO BE CONTAINED IN A LINED SEDIMENT TRAP AND PROPERLY DISPOSED OF AT A TREATMENT FACILITY.
4. FUELING
   A. FUEL TRUCKS WILL BE USED PRIMARILY FOR REFUELING IN THIS AREA. STORAGE TANKS IN EXCESS OF 1,000 GALLONS WILL NOT USED. CONTAINMENT WILL BE ESTABLISHED IF STORAGE TANK IS USED.
   B. ABSORBENT MATERIALS SHALL BE AVAILABLE IN THE FUEL TRUCK FOR USE IN CLEANING UP SMALL SPILLS.
   C. EDUCATION ON SPILL RESPONSE PROCEDURES SHALL BE PROVIDED BY THE CONTRACTOR.
5. HAZARDOUS MATERIALS
   A. CONTRACTOR SHALL FOLLOW ALL RECOMMENDED DIRECTIONS AND PRECAUTIONS ACCORDING TO MANUFACTURER/SUPPLIER OF HAZARDOUS MATERIALS. STORAGE OF HAZARDOUS MATERIALS SHALL NOT OCCUR IN THE CONSTRUCTION AREA.
   A. STORAGE OF HAZARDOUS MATERIAL SHALL NOT OCCUR ON BARGES.
6. CHEMICAL CONTAINMENT
   A. CHEMICALS NOT BEING USED SHALL BE STORED AT STAGING AREAS.
   B. GASOLINE, OIL, PAINT, SOLVENTS, AND OTHER CHEMICALS NECESSARY FOR CONSTRUCTION ARE NOT ALLOWED TO CONTACT THE SURFACE WATER.
   C. HAZARDOUS MATERIAL SHALL BE RETURNED TO THE HAZARDOUS MATERIAL STORAGE AREA AND LOCKED AT THE END OF EACH DAY.
   D. TEMPORARY SANITARY FACILITIES SHALL BE LOCATED AT LEAST 25 FEET FROM DRAINAGE INLETS AND 200 FEET UPGRADE FROM STREAMS AND WETLANDS. FACILITIES SHALL BE LOCATED ON STABLE, LEVEL SURFACES AND ANCHORED TO AVOID TIPPING.
   E. THE CONTRACTOR SHALL PROVIDE TANKS OR BARRELS TO COLLECT LIQUID BYPRODUCTS THAT POSE A POLLUTION HAZARD.
   F. THE POLLUTANTS SHALL BE REMOVED FROM THE SITE ON, AT MOST, A WEEKLY BASIS AND DISPOSED OF IN ACCORDANCE WITH STATE AND LOCAL REGULATIONS.
   G. ALL STATIONARY EQUIPMENT (NON-VEHICLE) WITH THE POTENTIAL TO LEAK FLUIDS OR DUE TO REFUELING OPERATIONS SHALL HAVE SECONDARY CONTAINMENT THAT PREVENTS THE DISCHARGE OF FLUIDS TO GROUND OR SURFACE WATERS.
   H. CHEMICAL SPILLS OF ANY KIND (OIL, FUEL, FERTILIZER, ETC.) MUST BE CLEANED UP AND REMOVED FROM THE SITE IMMEDIATELY. IF DRIPS AND LEAKS ARE DISCOVERED, THE SOILS MUST BE MANAGED BY THE CONTRACTOR ACCORDING TO MPCA RULES. SPILLS EQUAL TO OR GREATER THAN 5 GALLONS MUST BE REPORTED TO THE STATE DUTY OFFICER.
7. SOLID WASTE (INCLUDES TRASH)
   A. SOLID WASTE SHALL BE COLLECTED AND STORED IN APPROPRIATE CONTAINERS AND PROPERLY DISPOSED OF ON A REGULAR BASIS.
   B. CONTAINERS SHALL BE COVERED TO PREVENT WIND FROM BLOWING THE WASTE AROUND OR OFF THE SITE.
   C. NO MATERIALS SHALL BE BURIED OR BURNED ON SITE.
   D. MPCA DISPOSAL REQUIREMENTS WILL BE FOLLOWED FOR ALL SOLID WASTE.
8. DUST CONTROL
   A. USE METHODS AND OPERATIONAL PROCEDURES THAT PREVENT CONCRETE DUST AND OTHER DUST PARTICLES FROM LEAVING THE PROJECT SITE. THE CONTRACTOR SHALL USE A VARIETY OF DUST CONTROL METHODS, INCLUDING BUT NOT LIMITED TO THE FOLLOWING:
      I. RAPID STABILIZATION METHOD 3 (MNDOT SPECIFICATION 2575.3) ON IN-ACTIVE SOIL STOCKPILES.
      II. THE CONTRACTOR SHALL PRE-WATER AND SWEEP HAUL ROADS TO MINIMIZE DUST.
      III. PAVEMENT SURFACES SHALL BE SWEPT WITHIN 24 HOURS OF DISCOVERY OF SEDIMENT OR TRACKING ONTO PAVEMENT. PAVEMENT SHALL BE LIGHTLY WETTED PRIOR TO SWEEPING. THIS WORK IS INCIDENTAL.
      IV. DUST PLUMES RESULTING FROM ANY SANDBLASTING AND SHOTCRETE WORK ON THE PROJECT ARE NOT ALLOWED TO BE RELEASED INTO THE AIR. DUST PLUMES ARE REQUIRED TO BE CONTAINED ON-SITE BY APPROVED METHODS.

untitled
5/16/2014 1:15:57 PM
\\mspe-srv1\ECCCADStandards\MNDOT_BR.VB1\PLOTDRV\MNDOT.PLT
\\mspe-srv1\ECCCADStandards\MNDOT_BR.VB1\PLOTDRV\PENMNDOT_BW.TBL
pw:\\PWAPPDMA001.NorthCentral.Jacobs\Documents\D075697\CON00855001\0000000000223061\13.00.CAD\Plan Sheets\4001

HDR Engineering, Inc.

CERTIFIED BY Brett Voth 5-16-14
LICENSED PROFESSIONAL ENGINEER DATE
NAME: BRETT A. VOTH LIC. NO. 49045

TITLE: STORM WATER POLLUTION PREVENTION PLAN

DES: BAV	DR: BAV	APPROVED:
CHK: JZB	CHK: JZB	

SHEET NO. 18 OF 19 SHEETS

BRIDGE NO. 2440

SPILL CONTAINMENT PLAN

1. SPILL PREVENTION, CONTAINMENT, AND CLEANUP

   A. FOR THIS SECTION "EQUIPMENT SHALL REFER TO BOTH VEHICLES AND EQUIPMENT. PLACE DRIP PANS AND ABSORBANT PADS UNDER EQUIPMENT USED OVER WATER. KEEP AN ADEQUATE SUPPLY OF SPILL CLEANUP MATERIALS WITH THE EQUIPMENT ON BARGES AT ALL TIMES. IF THE EQUIPMENT WILL BE IDLE FOR MORE THAN ONE HOUR, PLACE DRIP PANS OR PLASTIC SHEETING UNDER THE EQUIPMENT ON DOCKS, BARGES, OR OTHER SURFACES OVER WATER. INSPECT EQIUPMENT FOR LEAKS AND SPILLS ON A DAILY BASIS. MAINTAIN ALL EQUIPMENT BEING USED OVER WATER. IF LEAKING LINES ON EQIUPMENT CANNOT BE REPAIRED, REMOVE EQUIPMENT FROM OVER THE WATER.

   FURNISH WATERTIGHT CURBS OR TOE BOARDS ON BARGES OR OTHER SURFACES OVER WATER TO CONTAIN MATERIAL, DEBRIS, AND TOOLS. SECURE MATERIALS TO PREVENT SPILLS OR DISCHARGE INTO WATER DUE TO WIND. ALL CHEMICALS STORED AND USED ON BARGE SHALL HAVE SECONDARY CONTAINMENT, NOT INCLUDING THE BARGE TOE BOARDS. ACCUMULATED WASTE MUST BE REMOVED PROPERLY AND IN A TIMELY MANNER.

   B. PROCEDURES FOR A MINOR SPILL INCLUDE, BUT ARE NOT LIMITED TO, ELIMINATING POTENTIAL SPARK SOURCES, NOTIFYING THE CONTRACTOR EM, CONTAINING THE SPILL WITH RESPONSE MATERIALS AND EQUIPMENT,AND CONTAINERIZING SOIL IN CONTACT WITH THE SPILLED MATERIAL OR STOCKPILING SOIL ON AND COVERING WITH 10-MIL PLASTIC. PROCEDURES FOR A MAJOR SPILL INCLUDE, BUT ARE NOT LIMITED TO, ELIMINATING POTENTIAL SPARK SOURCES, STOPPING WORK IN THE IMMEDIATE AREA AND PREPARING WORKERS TO EVACUATE THE SPILL SITE VIA DESIGNATED EXIT ROUTES AT THE DIRECTION OF THE CONTRACTOR EM. THE CONTRACTOR EM WILL NOTIFY AGENCIES LISTED ON THE EMERGENCY CONTACT LIST, THE MNDOT ECM, AND THE STATE DUTY OFFICER. THE EMERGENCY RESPONSE CONTRACTOR WILL APPROPRIATELY CONTAINERIZE FREE LIQUIDS FOR DISPOSAL, AND CONTAMINATED SOIL WILL BE STORED IN LINED ROLL-OFF CONTAINERS OR STOCKPILED ON AND COVERED WITH 10-MIL PLASTIC. AFTER THE INCIDENT, THE CONTRACTOR EM AND MNDOT ECM WILL REVIEW THE RESPONSE AND AMEND THE PROJECT SPILL CONTAINMENT PLAN IF NEEDED. A RECORD INCLUDING A DESCRIPTION OF THE SPILL, CAUSE, AND CLEANUP MEASURES TAKEN WILL BE SUBMITTED TO MNDOT.

   C. IN THE EVENT OF AN ACCIDENTAL SPILL OR RELEASE OF HAZARDOUS MATERIALS, ON-SITE PERSONNEL SHALL CONTAIN THE MATERIAL TO THE GREATEST EXTENT POSSIBLE. THESE PERSONNEL SHALL BE EQUIPPED WITH THE APPROPRIATE LEVELS OF PROTECTIVE CLOTHING AS DESCRIBED IN THE CONTRACTOR'S SITE HEALTH AND SAFETY PLAN. MNDOT AND THE EM SHALL BE NOTIFIED IMMEDIATELY WHEN ANY SPILL OCCURS.

   D. CONTAINMENT SHALL INCLUDE THE USE OF SORBENT PADS AND/OR BOOMS, DIKING WITH SOIL, COVERING AND/OR DIVERTING SPILLS FROM SEWERS, DRAINS, SURFACE WATER BODIES, ETC. FOR SPILLS THAT CANNOT BE CONTAINED BY ON-SITE PERSONNEL THE CONTRACTOR EM SHALL SECURE THE AREA AND NOTIFY THE FIRE DEPARTMENT, STATE DUTY OFFICER, AND MNDOT PM AND ECM IMMEDIATELY.

2. OIL/PETROLEUM LEAKS
   A. AN EMERGENCY SPILL KIT MUST BE AT EACH WORKSITE AT ALL TIMES AND BE READILY ACCESSIBLE. ALL WORK MUST BE STOPPED AT ANY TIME IN THE VICINITY OF A LARGE SPILL OR LEAK SO AS TO CONTAIN ANY LEAKS OR SHEENS.

INSPECTIONS AND MAINTENANCE

PERIODIC INSPECTIONS OF THE TEMPORARY EROSION AND SEDIMENT CONTROLS SHALL BE CONDUCTED AT LEAST ONCE EVERY SEVEN (7) DAYS AND WITHIN 24 HOURS OF RAINFALL EVENTS THAT PRODUCE MORE THAN 1/2 INCH OF RAIN IN A 24-HOUR PERIOD. RECORDS SHALL BE KEPT IN THE PROJECT OFFICE FOR EACH INSPECTION AND MAINTENANCE ACTIVITY AND WILL CONTAIN THE FOLLOWING INFORMATION:

- DATE AND TIME OF INSPECTION
- NAME OF PERSON(S) CONDUCTING INSPECTION
- FINDINGS OF INSPECTIONS, INCLUDING RECOMMENDATIONS FOR CORRECTIVE ACTION
- CORRECTIVE ACTIONS TAKEN (INCLUDING DATES, TIME, AND PERSON(S) COMPLETING MAINTENANCE ACTIVITIES)
- DATE AND AMOUNT OF ALL RAINFALL EVENTS GREATER THAN 1/2-INCH IN A 24-HOUR PERIOD
- DOCUMENT CHANGES TO SWPPP
- TRACKED SEDIMENTS SHALL BE REMOVED FROM PAVED SURFACES AT THE END OF EACH DAY, OR AS OFTEN AS NECESSARY TO MAINTAIN SAFE AND EFFECTIVE ROAD SURFACES, USING A PICK-UP TYPE SWEEPER. NO CONCRETE SLURRY WILL BE ALLOWED TO ENTER OPEN PUBLIC ROADWAYS.
- CONSTRUCTION ENTRANCES SHALL BE MAINTAINED DAILY.
- REPLACEMENT OF BMPS THAT ARE NOT FUNCTIONING.
- EXPOSED SOIL COVERS SHALL BE MAINTAINED OR SUPPLEMENTED TO REMAIN EFFECTIVE UNTIL THE TURF OVER THE EXPOSED SOIL IS FULLY ESTABLISHED

ALL REMAINING TEMPORARY BMPS AND ACCUMULATED SEDIMENTS WILL BE CLEANED OUT AND REMOVED UPON COMPLETION OF THE PROJECT.

IF SEDIMENT OR A CHEMICAL DEPOSITS IN A WATER OF THE STATE, THE SWPPP MUST BE IMMEDIATELY AMENDED TO ADDRESS THE PROCESS OF RECOVERY AND RESTORATION. THE MATERIAL MUST BE SCHEDULED FOR REMOVAL WITHIN 7 DAYS OF DISCOVERY AS PER NPDES PERMIT FOR ACCESS ISSUES, WITH CONTINUOUS PROGRESS UNTIL COMPLETION. THE SWPPP MUST BE AMENDED TO PREVENT ANY FURTHER LOSS OF SEDIMENT OR CHEMICAL.

THE CONTRACTOR IS RESPONSIBLE FOR MAINTAINING ALL BMPS UNTIL THE WORK HAS BEEN COMPLETED AND THE SITE HAS UNDERGONE FINAL STABILIZATION.

RECORDS RETENTION

THE SWPPP AND ALL AMENDMENTS SHALL BE KEPT ON THE CONSTRUCTION SITE DURING CONSTRUCTION ACTIVITIES. THE SWPPP SHALL BE LOCATED IN THE FIELD OFFICE AND ALL RELEVANT CONTRACTOR SUPERINTENDENTS SHALL HAVE A COPY OF THE SWPPP DOCUMENTS THAT ARE RELATED TO THEIR AREAS OF RESPONSIBILITIES.

ALL TRAINING DOCUMENTATION OF PROJECT SWPPP TEAM MEMBERS SHALL BE RETAINED WITH THE SWPPP DURING THE PROJECT.

ALL SWPPP INSPECTIONS AND SWPPP MAINTENANCE ACTIVITIES CONDUCTED DURING CONSTRUCTION ACTIVITIES SHALL BE RECORDED IN WRITING AND THESE RECORDS SHALL BE RETAINED WITH THE SWPPP DURING THE PROJECT.

ALL PERMANENT OPERATION AND MAINTENANCE AGREEMENTS THAT HAVE BEEN IMPLEMENTED, INCLUDING RIGHT-OF-WAY AGREEMENTS, CONTRACTS, COVENANTS, AND OTHER BINDING REQUIREMENTS REGARDING PERPETUAL MAINTENANCE, SHALL BE AVAILABLE FROM MNDOT.

ALL CALCULATIONS FOR THE DESIGN OF TEMPORARY AND PERMANENT STORMWATER MEASURES SHALL BE AVAILABLE IN THE PROJECT OFFICE.

untitled
5/16/2014 1:48:17 PM
\\mspe-srv1\ECGCADS1\ondcrds\MNDOT_BR_V8I\PLOTDRV\MNDOT.PLT
\\mspe-srv1\ECGCADS1\ondcrds\MNDOT_BR_V8I\PLOTDRV\PEN\MNDOT_BW.TBL
par:\\MWAPPDMA001\Highway\Projects\00759$\CONDOCS\00000000223061\13.00_CADD\Plan Sheets\A002

HDR Engineering, Inc.

CERTIFIED BY Brett Voth 5-16-14
LICENSED PROFESSIONAL ENGINEER DATE
NAME: BRETT A. VOTH LIC. NO. 49045

TITLE: STORM WATER POLLUTION PREVENTION PLAN

DES: BAV	DR: BAV	APPROVED:
CHK: JZB	CHK: JZB	

SHEET NO. 19 OF 19 SHEETS

BRIDGE NO. 2440