Pier Protection

Matt Harold | Bridge Design Engineer

May 17, 2017

DEPARTMENT OF TRANSPORTATION

Presentation Outline

- Why Install Pier Protection?
- Pier Protection Introduction
- Guidance for New Bridge Projects
- Guidance for Bridge Repair Projects
- Design of Crash Struts
- New Research

Why Install Pier Protection?

Figure 2.7. Truck Accident – SH 14 Bridge over IH-45, Corsicana, Texas.

Pier Protection Introduction

- MnDOT updated policy July 2016
- MnDOT LRFD Bridge Design Manual Article 11.2.3
- Design (BDM 11.2.3.2.1)
  - Crash Strut to resist 600 kip collision. See BDM 11.2.3.2.4

  OR

  - Individual column to resist 600 kip collision per AASHTO Article 3.6.5

  OR

  - Protect with TL-5 barrier

  OR

  - Validate bridge will not collapse with removal of any column

Pier Protection Introduction

- Protect with TL-5 barrier

OR

- Validate bridge will not collapse with removal of any column

Pier Protection Introduction

- Pier Considered Exempt from Protection Requirements (BDM 11.2.3.2.1)
  - Piers with ≥ 3 columns AND design speed of roadway below ≤ 40 MPH
  - Non-Critical bridges with piers with ≥ 3 columns and design speed or roadway below > 40 MPH if:
    - Annual Frequency of pier collision ≤ 0.001 (AASHTO Article C3.6.5.1)
    - Roadway underneath is undivided and HCADT < 800
    - Roadway underneath is divided, on a tangent under the bridge, and HCADT < 2400
    - Roadway underneath is divided, on a curve under the bridge, and HCADT < 1200

Pier Protection Introduction

- What's a non-critical bridge?
- Critical is defined as:
  - A bridge carrying mainline interstate
  - A bridge spanning over mainline interstate
  - A bridge carrying > 40,000 AADT
  - A bridge spanning over a roadway carrying > 40,000 AADT
- Critical bridges require annual frequency of collision ≤ 0.0001 for exemption (AADT ≤ 3,000 for divided tangent)

Pier Protection Introduction

- Pile Bent Piers
  - Typically not used within 30 feet of roadway or 25 feet of railroad track
  - If necessary to use pile bent pier adjacent to roadway or railroad:
    - Protect using TL-5 barrier

    OR

    - Encase piles in pile wall
      - Design per "heavy construction" requirements of AREMA

      AND

      - Design pile wall to resist 600 kip collision load

Pier Protection Introduction

- Piers Adjacent to Railroads (BDM 11.2.3.2.2)
  - Piers within 25 feet of railroad must follow “heavy construction” requirements of AREMA 2.1.5.1
    - Area of Column ≥ 30 ft^2
    - Each column has minimum dimension of 2.5 ft
    - Larger dimension is parallel to track

Guidance for New Bridge Projects

- BDM 11.2.3.2.4 – Crash Struts for Pier Protection
  - Strut Geometry
  - Strut Design
- BDM 11.2.3.2.5 – Barrier Protection of Piers
  - TL-5 barrier requirements

Guidance for New Bridge Projects - Geometry

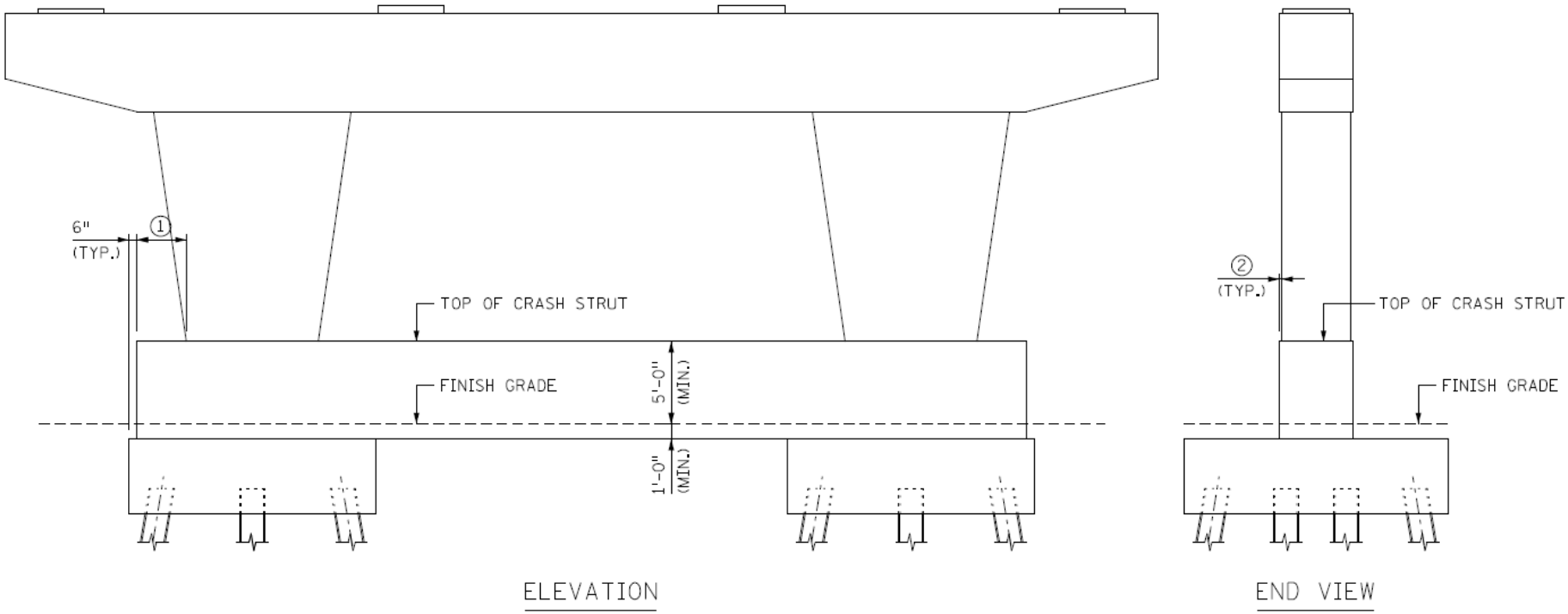

NOTES:

GUARDRAIL, END TREATMENT, OR OTHER TRAFFIC PROTECTION IS NOT SHOWN AND MUST BE COORDINATED WITH THE ROADWAY PLANS.

1 3'-0" MIN. WHEN GUARDRAIL CONNECTION IS REQUIRED.
1'-0" MIN. FOR ALL OTHER SITUATIONS.
A VERTICAL TAPER MAY BE REQUIRED AT END OF STRUT.
CONTACT THE MnDOT DESIGN STANDARDS UNIT AT 651-366-4 FOR END TAPER REQUIREMENTS.

2 2" MIN. FOR NEW PIER CONSTRUCTION.
5" MIN. FOR PIER RETROFIT CONSTRUCTION.

Figure 11.2.3.2.4.1
Crash Strut Details

Guidance for New Bridge Projects - Geometry

- Vertical face typical, barrier shape is allowed – coordinate with roadway designer
- Strut may have to taper to tie into median barrier – coordinate with road designer.

Guidance for New Bridge Projects - Geometry

- Railroad Struts have different requirements
  - If between 12’ and 25’ to track, height must be 6’ above track
  - If closer than 12’ to track, height must be 12’ above track
  - Extend bottom of strut 4’-0” minimum below groundline
  - Thickness must be 2’-6” minimum
    - Locate vertical face 6” outside column on railroad side
  - Extend strut minimum 1’-0” beyond exterior columns
  - Minimum length is 12’-0”

Guidance for New Bridge Projects - Design

- If geometry guidelines and minimum dimensions are met, standard figures and tables are provided
- Standard designs assume a 15° angle from load to strut – not explicit in BDM
- Figure 11.2.3.2.4.2

Guidance for New Bridge Projects - Design

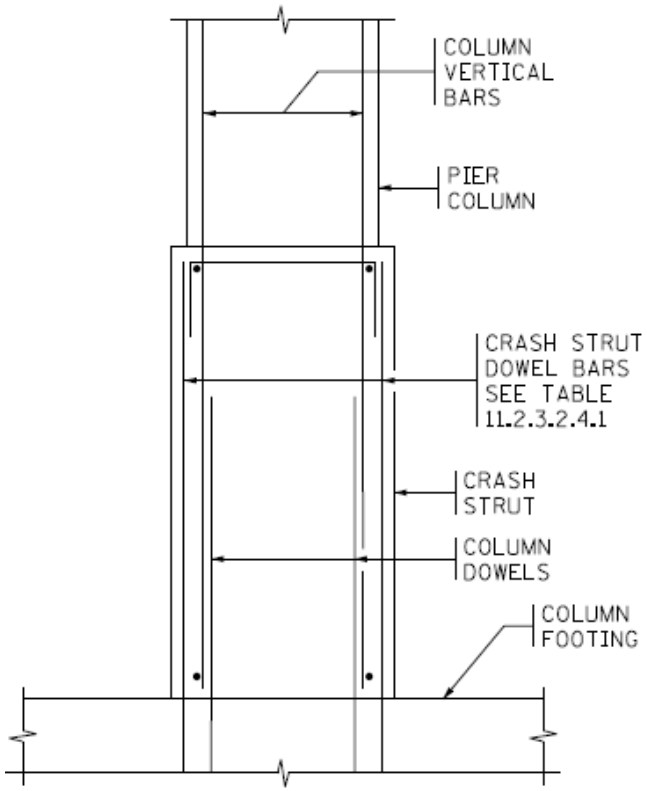

IN COLUMN FOOTING REGION

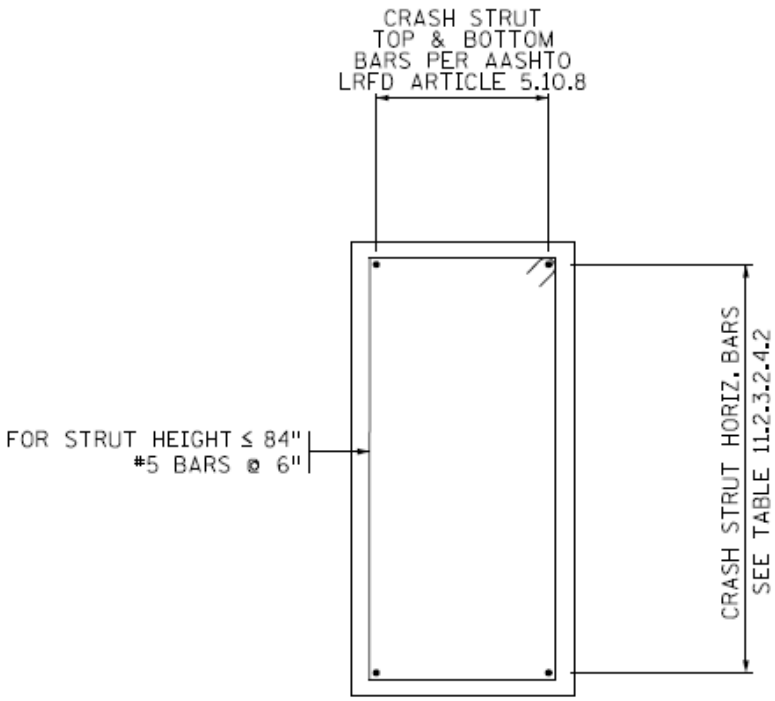

BETWEEN COLUMN FOOTINGS

Figure 11.2.3.2.4.2

Guidance for New Bridge Projects - Barrier

- Can use TL-5 barrier for pier protection
- AASHTO Article 3.6.5.1
  - 54” high barrier when located within 10 ft. of pier
  - 42” high barrier when located more than 10 ft. from pier
- Figure 11.2.3.2.5.1

Guidance for New Bridge Projects - Barrier

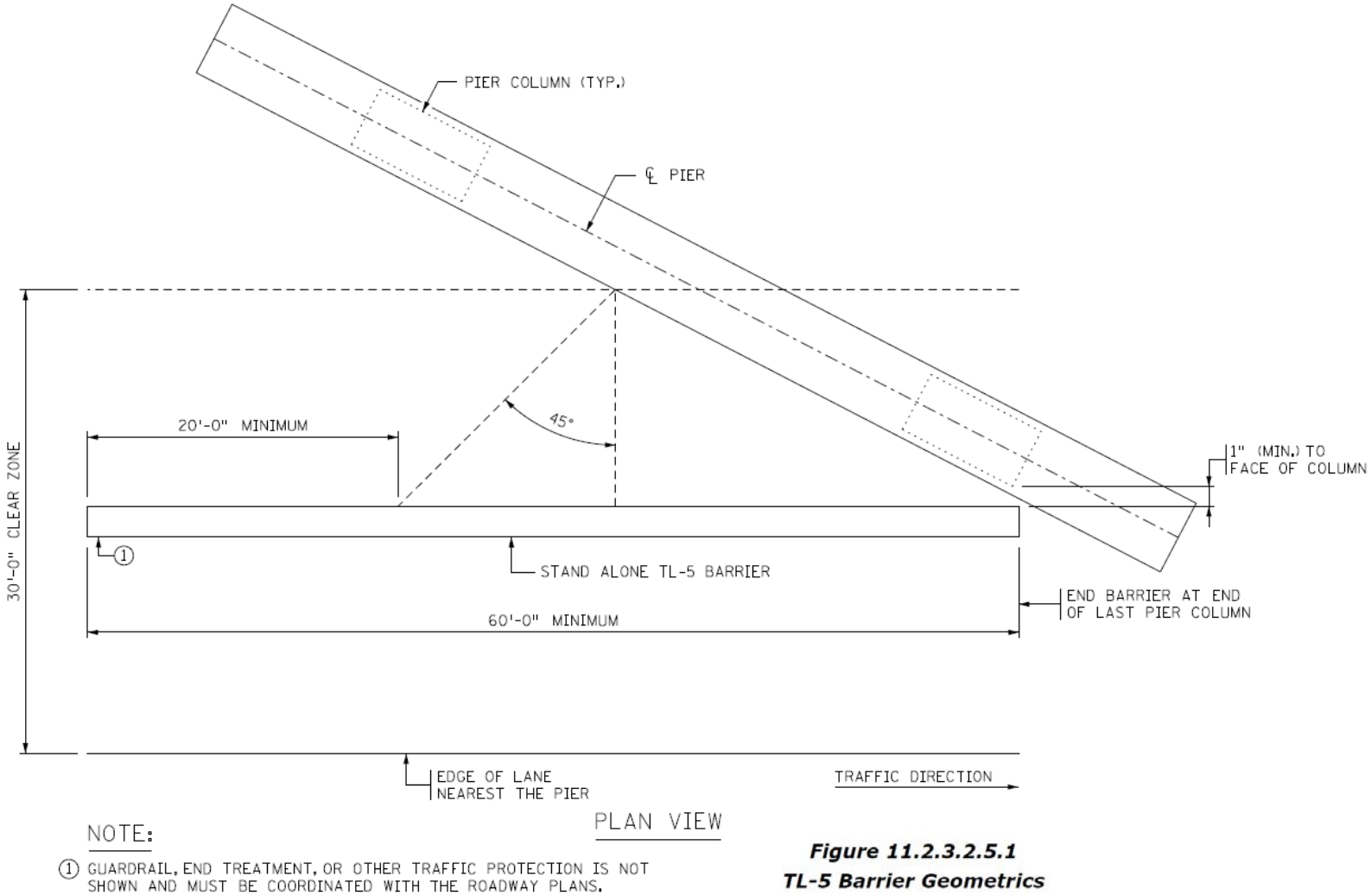

Figure 11.2.3.2.5.1
TL-5 Barrier Geometrics

Guidance for Bridge Repair Projects

- BDM 11.2.3.2.3 – Pier Protection for Existing Bridges
- For trunk highway system, Regional Bridge Construction Engineer will coordinate with the District to determine if required per the *Bridge Preservation Improvement Guidelines*
- For local system, designer must coordinate with City or County Engineer

Guidance for Bridge Repair Projects - Geometry

- Follow same geometry requirements as new bridges
- Exception: locate vertical face 5” outside column

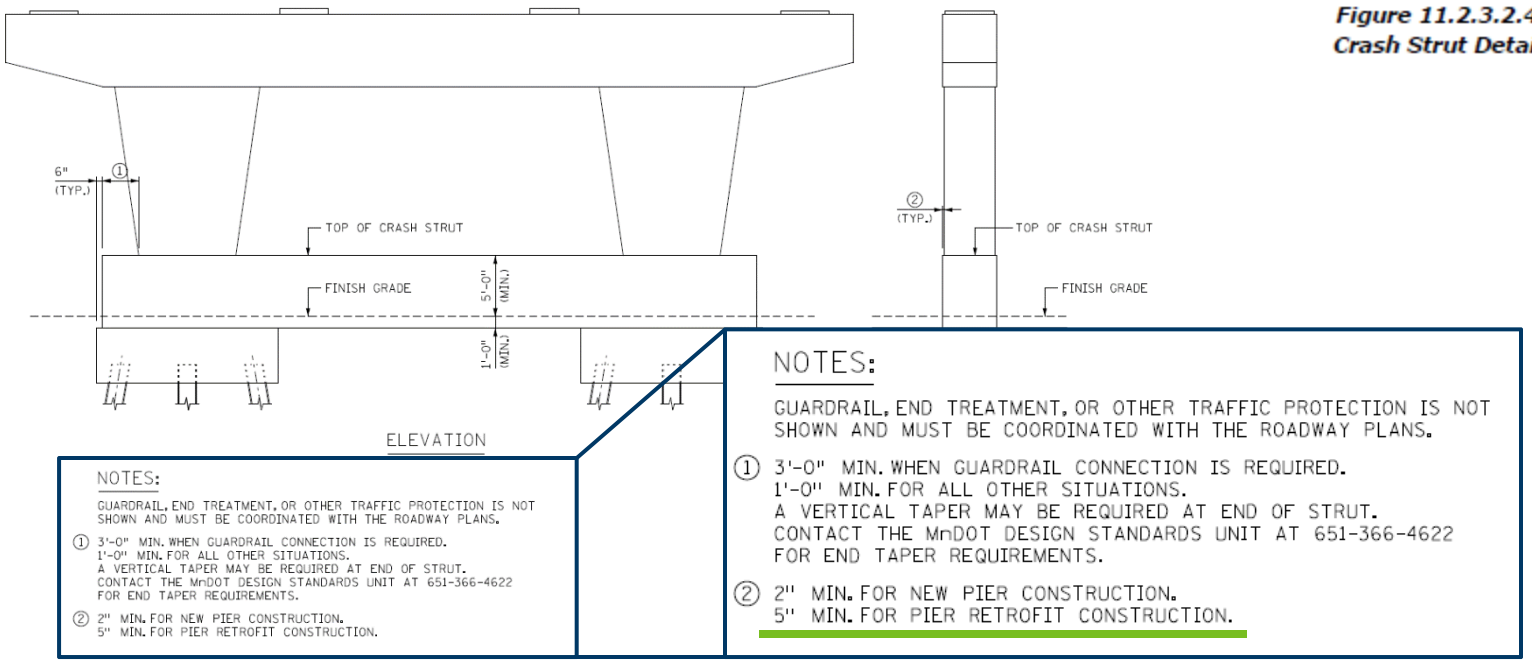

Guidance for Bridge Repair Projects - Design

- Custom design is required for all repair projects
- Must check existing foundation for ability to carry additional dead load
- Dowel reinforcement to be adhesive anchors

Design of Crash Struts

- 600 kip collision load applied up to 15° from roadway or railway

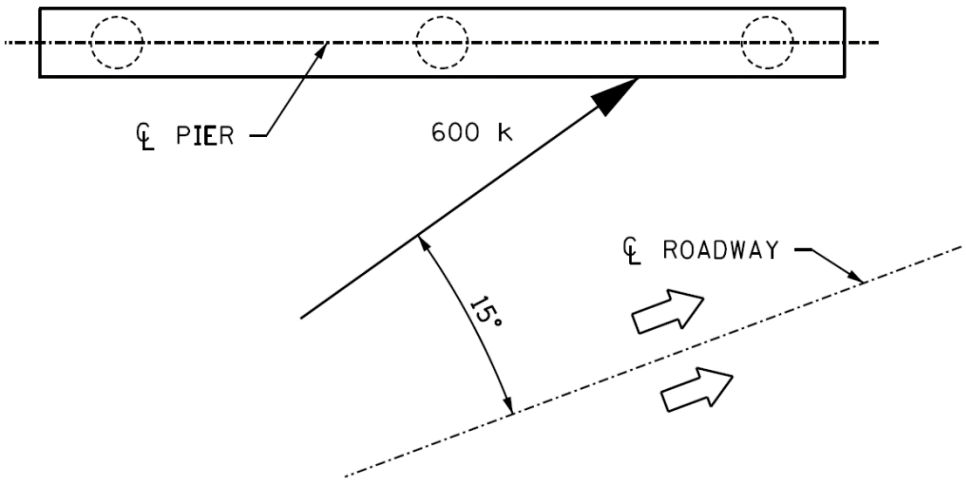

Design of Crash Struts

- Design for both custom new and all rehab projects
- Load applied 5 ft above ground line distributed over 5 ft
- Design strut to resist entire load independent of column
- Region between footings, design as simply supported beam spanning between footings (i.e. L = clear distance between footings)

Design of Crash Struts

- In footing region, design for two cases:
- Case 1
  - Diagonal yield line at failure
  - Determine capacity similar to barrier capacity
    - AASHTO Article A13.3.1
  - In new bridges, design footing length > L_c
- Case 2
  - Horizontal yield line at failure (at footing)
  - Flexural resistance of dowels only
  - Often controls for rehab projects

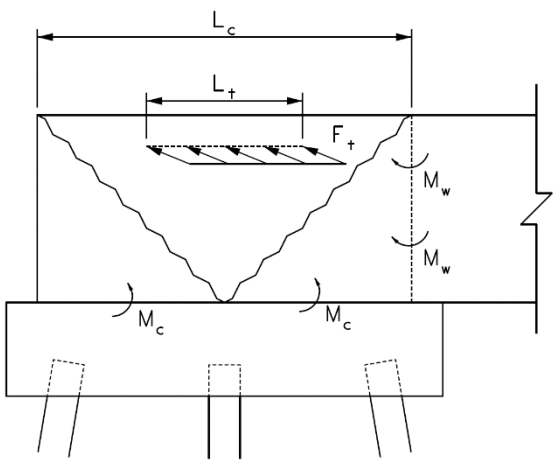

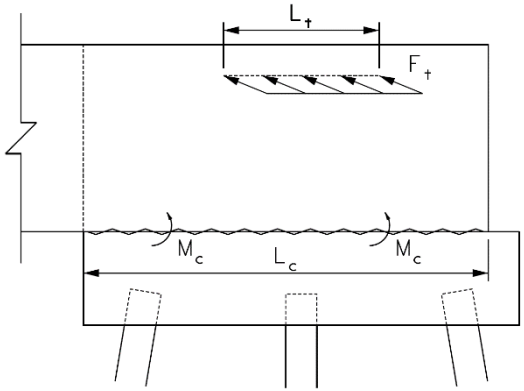

Design of Crash Struts

- Case 1
  - Yield Line Theory
  - T.J. Hirsch research paper
  - Hirsch, T.J. 1978. “Analytical Evaluation of Texas Bridge Rails to contain Buses and Trucks,” Research Report 230-2, August, Texas Transportation Institute, Texas A&M University, College State, TX.

Design of Crash Struts

- Yield Line Theory
  - Member yields along a diagonal line from footing
  - M_c – flexural resistance about horizontal axis (dowels)
  - M_w – flexural resistance about vertical axis (horizontals)
  - M_b – additional flexural resistance of beam additional to M_w if any

Design of Crash Struts

- Interior Region
  - $L_c = \frac{L_t}{2} + \sqrt{\left(\frac{L_t}{2}\right)^2 + \frac{8H(M_b+M_w)}{M_c}}$
    - AASHTO Eqn. A13.3.1-2
  - $R_w = \left(\frac{2}{2L_c - L_t}\right)\left(8M_b + 8M_w + \frac{M_c L_c^2}{H}\right)$
    - AASHTO Eqn. A13.3.1-1

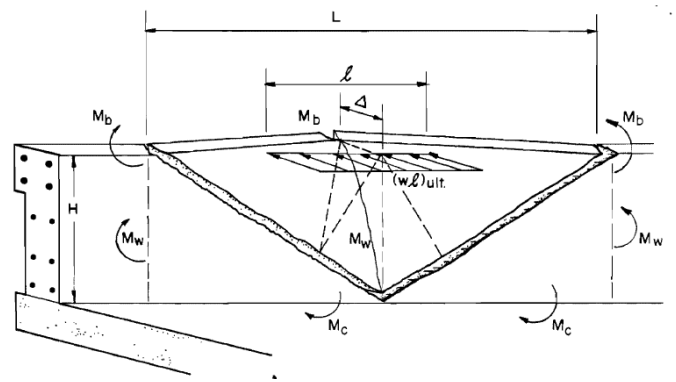

FIGURE 13. YIELD LINE ANALYSIS OF CONCRETE PARAPET WALL

Design of Crash Struts

- Exterior Region
  - $L_c = \frac{L_t}{2} + \sqrt{\left(\frac{L_t}{2}\right)^2 + \frac{H(M_b+M_w)}{M_c}}$
    - AASHTO Eqn. A13.3.1-2
  - $R_w = \left(\frac{2}{2L_c - L_t}\right)\left(M_b + M_w + \frac{M_c L_c^2}{H}\right)$
    - AASHTO Eqn. A13.3.1-3

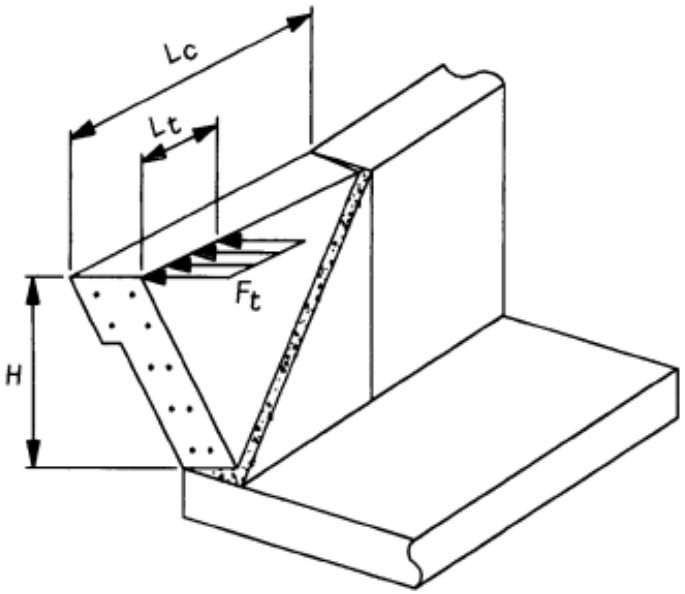

Figure CA13.3.1-2—Yield Line Analysis of Concrete Parapet Walls for Impact near End of Wall Segment

Design of Crash Struts

- Region Between Footings
  - BDM suggests designing as simple supported beam between footings
  - Alternatively, modify AASHTO equations per Hirsch Figure 14
  - $L_c = \frac{L_t}{2} + \sqrt{\left(\frac{L_t}{2}\right)^2 + \frac{8H(M_b+M_w)}{M_c} - \frac{GL_t}{2}}$
    - AASHTO Eqn. A13.3.1-2 mod
  - $R_w = \left(\frac{2}{2L_c-L_t}\right)\left(8M_b + 8M_w + \frac{M_cL_c(L_c-G)}{H}\right)$
    - AASHTO Eqn. A13.3.1-1 mod

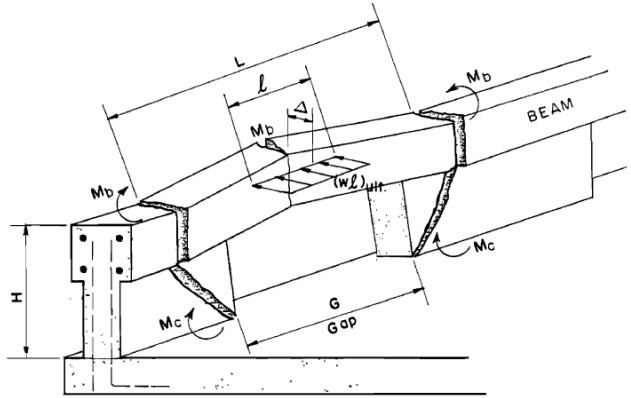

FIGURE 14. YIELD LINE ANALYSIS OF OPEN CONCRETE WALL OR PARAPET.

Design of Crash Struts

- M_c using Adhesive Anchors
  - Resistance of dowels is limited to adhesive anchor capacity
    - Tension resistance of dowel
    - Combined tension and shear resistance of dowel
    - Concrete breakout resistance
    - Anchor bond resistance
  - See prior presentation about adhesive anchors
  - This limit can be << yield strength of dowels
  - As M_c decreases, L_c increases

Design of Crash Struts

- Case 2
  - I can’t get Case 2 to work!
  - Often occurs on rehab projects with limited footing sizes
  - Can incorporate column resistance

Design of Crash Struts

- Using column resistance
  - Requires approval from Bridge Office project manager
  - Determine moment resistance of column based on Extreme Event limit state
  - Check minimum dead load factors without live load
  - $\phi M_{n_total} = \phi M_{n_strut} + \phi M_{n_column}$

Design of Crash Struts

- Why minimum factors?

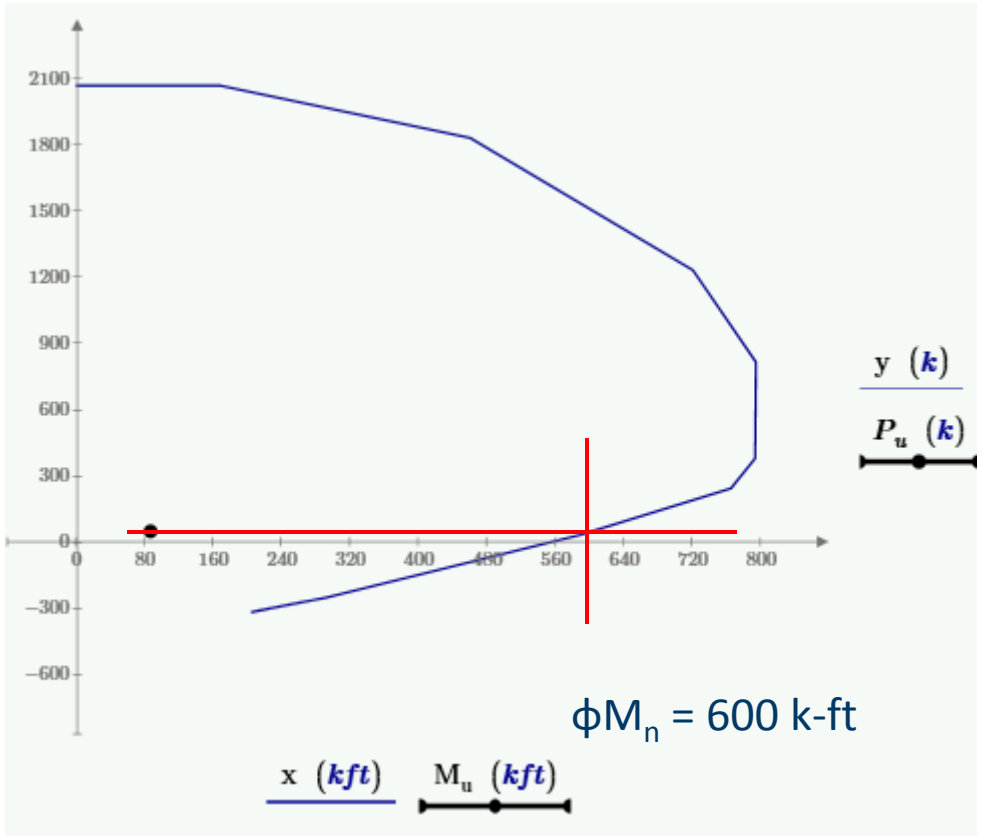

Design of Crash Struts

- What if my rehab project still won't work?
  - Work with Bridge Office project manager for other options
  - Have had to implement "outside the box" solutions for challenging bridges

New Research

- NCHRP 12-90
  - Due out at end of 2017
  - Working to refine when pier protection is needed
    - Redundancy of substructure and superstructure
    - Size of columns
  - Will have recommendations for revisions to AASHTO Specifications
    - MnDOT will most likely update guidance based on recommendations

DEPARTMENT OF TRANSPORTATION

Questions?

Thank you!

Matt Harold

matthew.harold@state.mn.us

651-366-4519