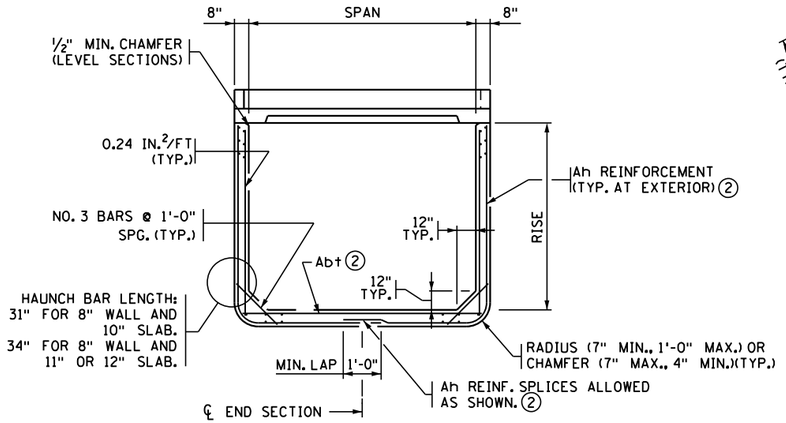

END VIEW

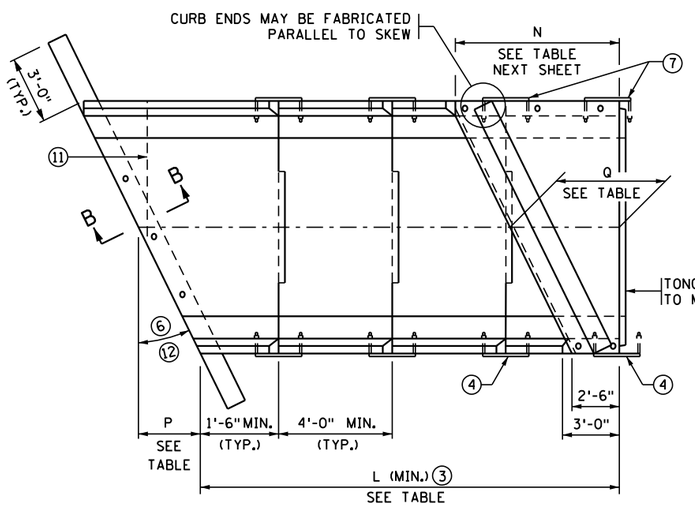

PLAN VIEW

SINGLE BARREL OPTION

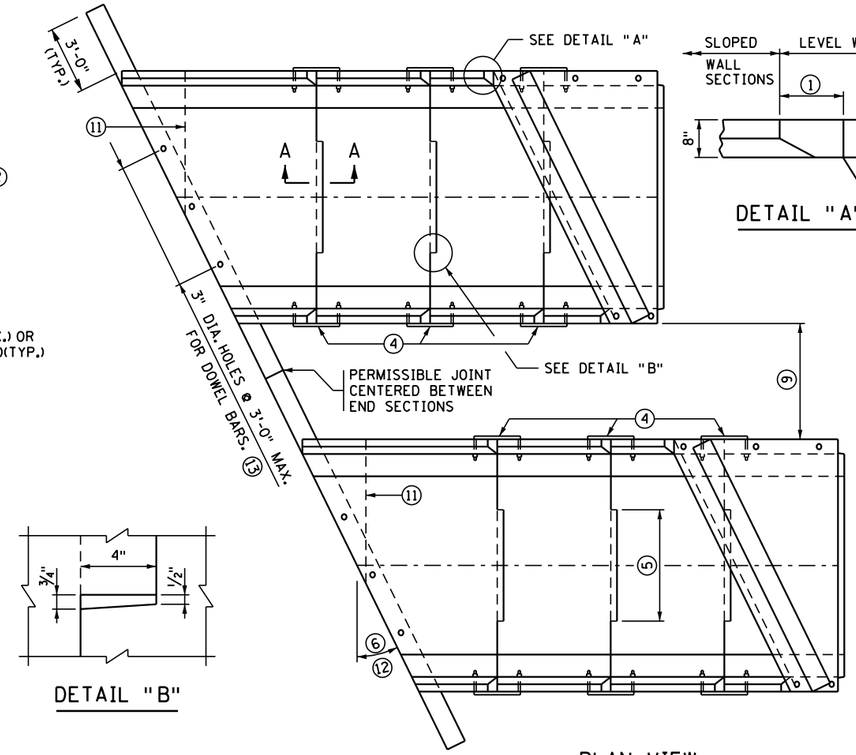

PLAN VIEW

DOUBLE-BARREL OPTION

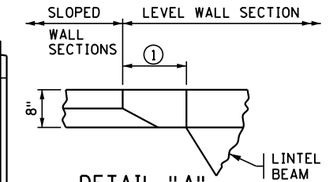

DETAIL "A"

DETAIL "B"

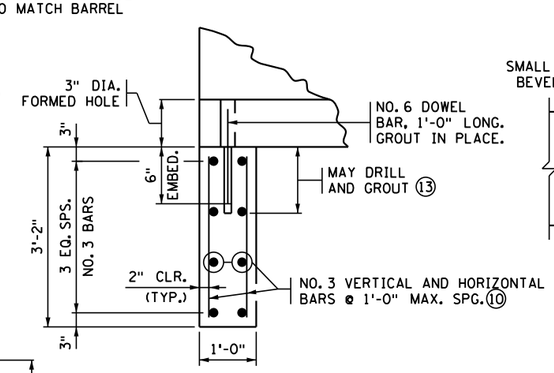

SECTION B-B

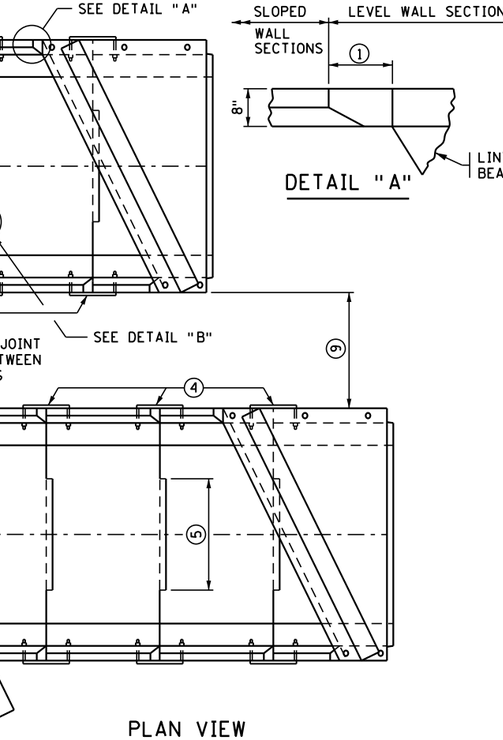

TONGUE AND GROOVE JOINT

MAKE DIMENSION OF TONGUE OR GROOVE ON ADJACENT PRECAST BARREL SECTIONS SO INSIDE WALLS ARE FLUSH.

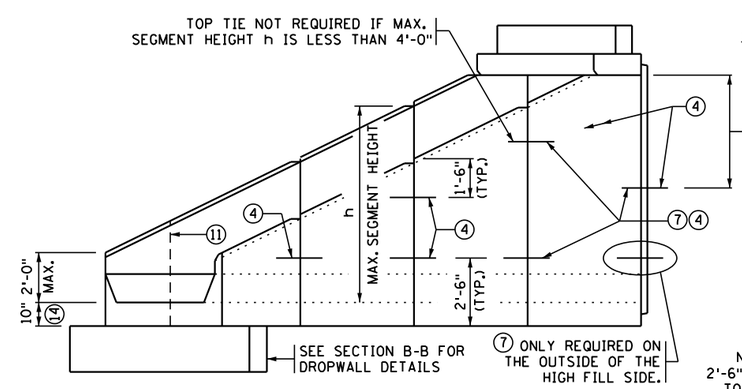

ELEVATION

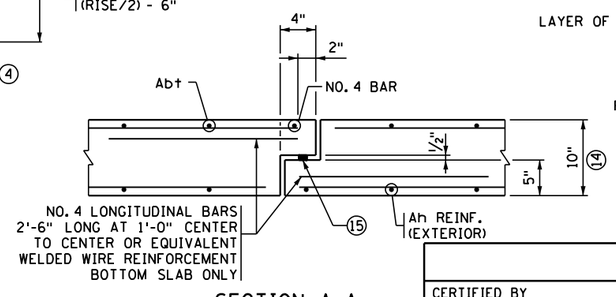

SECTION A-A

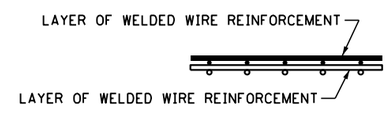

REINFORCEMENT LAYER DETAIL

WHEN MORE THAN ONE LAYER OF WELDED WIRE REINFORCEMENT IS USED TO OBTAIN THE REQUIRED REINFORCEMENT AREAS, PLACE THE WIRES OF THE WELDED WIRE REINFORCEMENT AS SHOWN

CONSTRUCTION NOTES

SEE STANDARD FIG. 5-395.101(A) AND FIG. 5-395.101(B) FOR ADDITIONAL DIMENSIONS AND CONSTRUCTION NOTES.

ON ALL END SECTIONS FOR WATERWAYS, USE DROPWALLS ON INLET AND OUTLET ENDS.

FINISH ALL EXPOSED EDGES OF CONCRETE WITH 1/2" OR 3/4" CHAMFER OR RADIUS UNLESS OTHERWISE NOTED.

USE CONCRETE MIX 3W82 WITH NO CALCIUM CHLORIDE ALLOWED.

USE DROPWALL CONCRETE MIX 3S52, OR 3Y82 IF PRECAST. LIMITS FOR DROPWALL EXCAVATION TO BE APPROXIMATELY THE SAME AS DROPWALL DIMENSIONS. FURNISHING AND INSTALLATION OF DROPWALL IS INCLUDED IN PRICE BID FOR END SECTIONS.

PLACE LONGITUDINAL REINFORCEMENT WITH A MINIMUM OF 0.06 SQ. IN. PER FT. ON BOTH FACES.

NO TONGUE OR GROOVE REQUIRED IN WALLS BETWEEN END SECTIONS.

SEE STANDARD FIG. 5-395.115 FOR EMBANKMENT PROTECTION.

1. 8 1/8" @ 15°; 10 5/8" @ 30°; 1'-2" @ 45°
2. SEE STANDARD FIG. 5-395.110(B) FOR REINFORCEMENT TABLES.
3. NUMBER OF SECTIONS VARIES WITH CULVERT RISE.
4. EXCEPT AS NOTED, USE 1" DIA. CULVERT TIES. SEE STANDARD PLATE NO. 3145 FOR DETAILS. TWO TIES ARE REQUIRED PER JOINT WHERE h IS GREATER THAN 4'.
5. 3'-6" MIN. TONGUE AND 3'-7" MIN. GROOVE FOR CULVERTS WITH 6'-0" SPANS. 5'-0" MIN. TONGUE AND 5'-1" MIN. GROOVE FOR CULVERTS WITH SPANS GREATER THAN 6'-0". CENTER TONGUE AND GROOVE ON ℄ OF EACH APRON JOINT. TONGUE AND GROOVE JOINT ON ALL THREE SIDES OF APRON IS PERMISSIBLE.
6. FOR SKEW ANGLES OVER 7 1/2° UP TO 22 1/2°, USE A 15° SKEW END SECTION. FOR SKEW ANGLES OVER 22 1/2° UP TO 37 1/2°, USE A 30° SKEW END SECTION. FOR SKEW ANGLES OVER 37 1/2° UP TO 45°, USE A 45° SKEW END SECTION.
7. PROVIDE EXTRA STRONG CONNECTION AT LOCATION SHOWN; REQUIRED ONLY ON HIGH FILL SIDE FOR 45° SKEW END SECTIONS OVER 6'-0" HIGH. FOR MULTIPLE BARREL OPTION, ONLY INCLUDE EXTRA STRONG TIES ON THE OUTSIDE OF THE HIGH FILL SIDE. SEE STANDARD FIG. 5-395.110(B) FOR DETAILS.
8. DIMENSION "T" IS EQUAL TO Tt, Tb OR Ts.
9. REFER TO THE GENERAL PLAN AND ELEVATION SHEET FOR THE DISTANCE BETWEEN BARRELS OF ADJACENT BOXES AND TO STANDARD FIGURE 5-395.115 FOR MATERIAL REQUIREMENTS FOR FILL BETWEEN ADJACENT BOXES.
10. WELDED WIRE REINFORCEMENT OF EQUAL AREA MAY BE SUBSTITUTED FOR REBAR.
11. ON THE LAST SEGMENT OF THE 45° SKEWED APRONS, A TRANSVERSE JOINT IN THE BOTTOM IS PERMITTED. A SPECIAL TIE, SIMILAR TO THE SIDE TIE, MUST BE PROVIDED. THE TIE SHALL BE INSET AND THE SPACE FILLED WITH AN APPROVED GROUT.
12. FOR BOX CULVERTS WITH SPANS OF 16' THE MAXIMUM SKEW SHALL BE 30°.
13. FILL HOLE WITH GROUT. GROUT CONSISTS OF 1 PART CEMENT AND 2 PARTS SAND. USE TYPE 1A AIR ENTRAINED PORTLAND CEMENT. GROUT MIX MAXIMUM SLUMP IS 4".
14. APRON BOTTOM SLAB THICKNESS MAY BE 8" FOR CULVERTS WITH 6' SPANS ONLY. BOTTOM SLAB THICKNESS MAY BE INCREASED UP TO 2" MAX. PROVIDED COVER IS 1 1/2" MIN., 2" MAX.
15. REFER TO SPEC. 2412 FOR SEALANT REQUIREMENTS.

LENGTH P

SPAN (FT.)	15° SKEW	30° SKEW	45° SKEW
6	0'-11 3/4"	2'-1 3/8"	3'-8"
8	1'-3"	2'-8 3/8"	4'-8"
10	1'-6 1/4"	3'-3 1/4"	5'-8"
12	1'-9 3/8"	3'-10 1/4"	6'-8"
14	2'-0 5/8"	4'-5 1/8"	7'-8"
16	2'-3 7/8"	5'-0"	12

MIN. LENGTH L

RISE (FT.)	15° SKEW	30° SKEW	45° SKEW
4	7'-1 3/4"	7'-7 3/8"	8'-7 7/8"
5	9'-2 1/2"	9'-11 1/8"	11'-5 7/8"
6	11'-3 3/8"	12'-2 7/8"	14'-3 3/4"
7	13'-4 1/4"	14'-6 5/8"	17'-1 3/4"
8	15'-5 1/8"	16'-10 1/4"	19'-11 5/8"
9	17'-5 7/8"	19'-2"	22'-9 5/8"
10	19'-6 3/4"	21'-5 3/4"	25'-7 1/2"
11	21'-7 5/8"	23'-9 3/8"	28'-5 1/2"
12	23'-8 1/2"	26'-1 1/8"	31'-3 3/8"
13	25'-9 3/8"	28'-4 7/8"	34'-1 3/8"
14	27'-10 1/8"	30'-8 1/2"	36'-11 1/4"

LENGTH Q

SPAN (FT.)	15° SKEW	30° SKEW	45° SKEW
6	3'-5 3/4"	4'-7 3/8"	6'-2"
8	3'-9"	5'-2 3/8"	7'-2"
10	4'-0"	5'-9 1/4"	8'-2"
12	4'-3 3/8"	6'-4 1/8"	9'-2"
14	4'-6 5/8"	6'-11 1/8"	10'-2"
16	4'-9 7/8"	7'-6 1/8"	12

REVISION: FEBRUARY 22, 2018

APPROVED: MARCH 24, 2011

Nancy Daubenberger
STATE BRIDGE ENGINEER

STATE PROJ. NO - (T.H.) STA. + .

FIG. 5-395.110(A)

CERTIFIED BY _____ LICENSED PROFESSIONAL ENGINEER _____ DATE

NAME: LIC. NO.

TITLE: PRECAST CONCRETE END SECTION TYPE III - SINGLE OR DOUBLE BARREL FOR SKEWS 7 1/2° TO 45°

DES: DR: APPROVED:

CHK: CHK:

SHEET NO. OF SHEETS

BRIDGE NO.