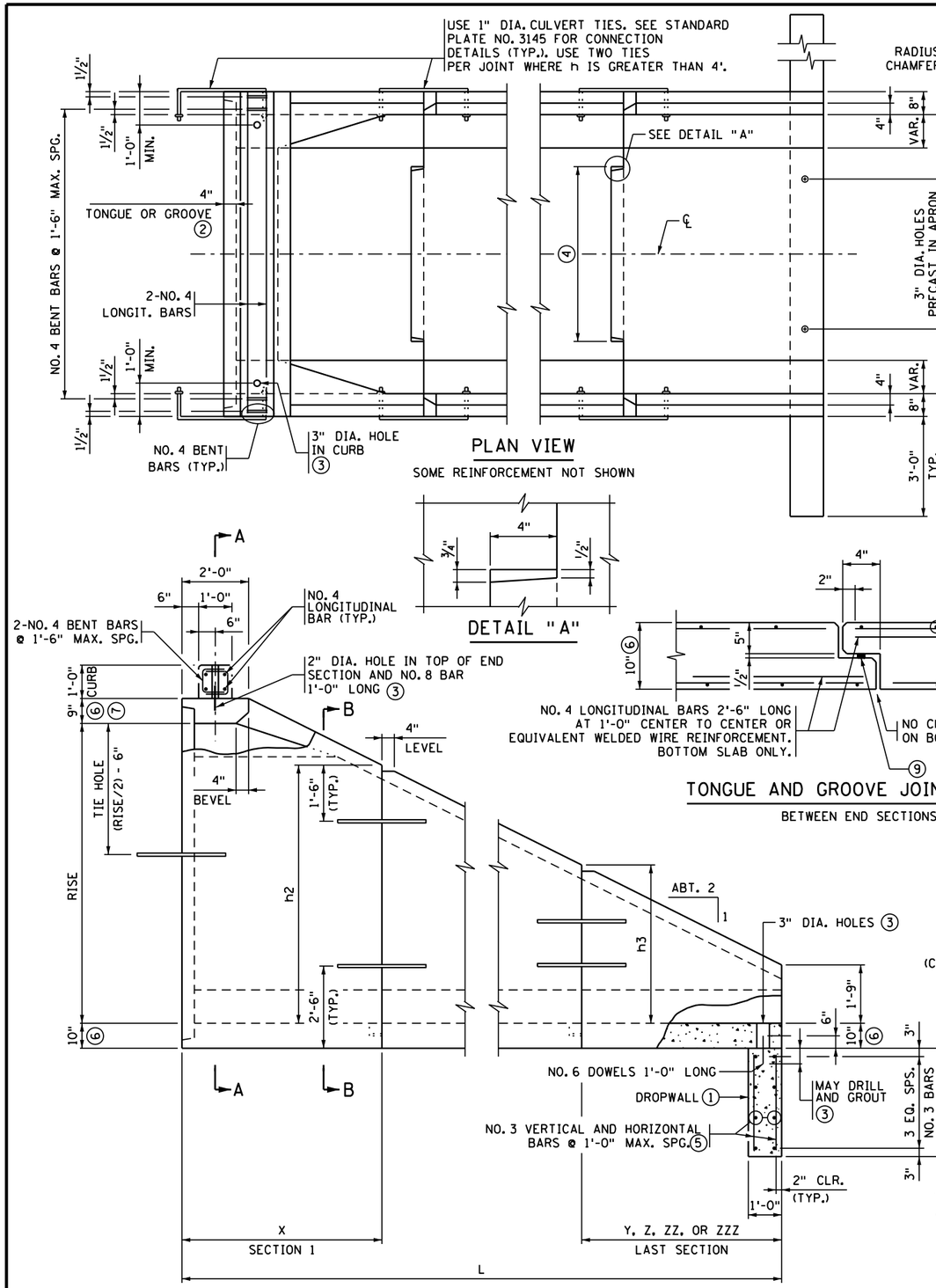

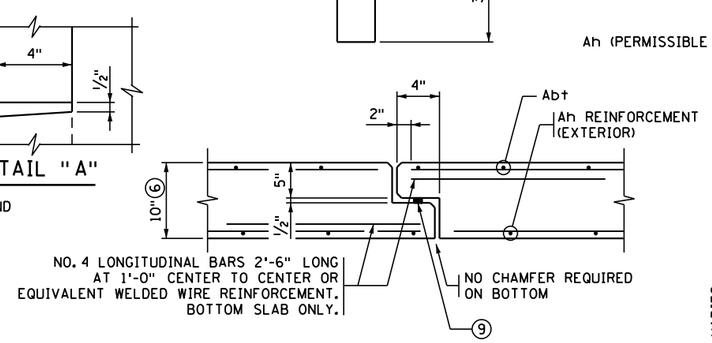

TONGUE AND GROOVE JOINT DETAIL

BETWEEN END SECTIONS

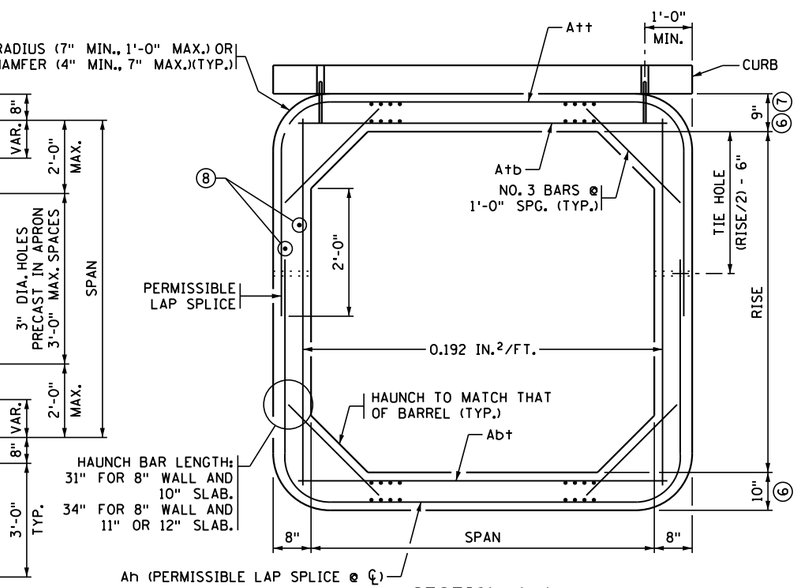

SECTION A-A

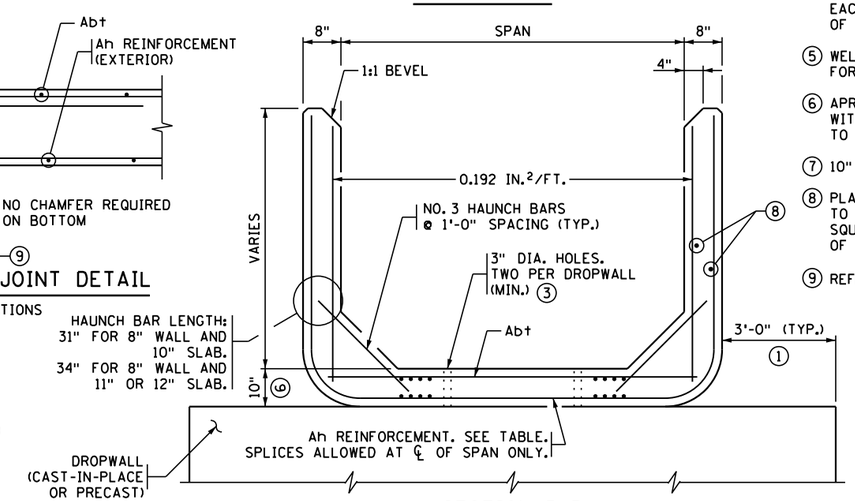

SECTION B-B

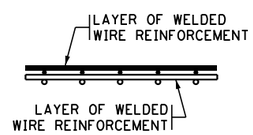

REINFORCEMENT LAYER DETAIL

WHEN MORE THAN ONE LAYER OF WELDED WIRE REINFORCEMENT IS USED TO OBTAIN THE REQUIRED REINFORCEMENT AREAS, PLACE THE WIRES OF THE WELDED WIRE REINFORCEMENT AS SHOWN.

CONSTRUCTION NOTES

SEE STANDARD FIG. 5-395.101(A) AND FIG. 5-395.101(B) FOR ADDITIONAL DIMENSIONS AND CONSTRUCTION NOTES.

USE CONCRETE MIX NO. 3W82 WITH NO CALCIUM CHLORIDE ALLOWED.

ALL END SECTIONS REQUIRE CURB ON LINTEL BEAM.

ON ALL END SECTIONS FOR WATERWAYS, USE DROPWALLS ON INLET AND OUTLET ENDS.

SEE STANDARD FIG. 5-395.115 FOR EMBANKMENT PROTECTION.

FINISH ALL EXPOSED EDGES OF CONCRETE WITH ½" OR ¾" CHAMFER OR RADIUS UNLESS OTHERWISE NOTED.

MAXIMUM SIZE OF REINFORCEMENT BARS IS NO. 6. EXCEPT NO. 7 OR 8 BARS MAY BE USED FOR Atb ON SPANS GREATER THAN 14'. THE MAXIMUM WELDED WIRE REINFORCEMENT SIZE IS W23 PER LAYER (MAXIMUM OF 2 LAYERS).

① WITH DOUBLE BOXES LOCATE DROPWALL JOINTS BETWEEN END SECTIONS. SEE STANDARD FIG. 5-395.111 FOR ALTERNATE DROPWALLS. LIMITS OF EXCAVATION FOR DROPWALL ARE APPROXIMATELY THE SAME AS DROPWALL DIMENSIONS. DROPWALL CONCRETE MIX IS 3S52, OR 3Y82 IF PRECAST. FURNISHING AND INSTALLATION OF DROPWALL TO BE INCLUDED IN PRICE BID FOR END SECTIONS. DROPWALL NOT REQUIRED FOR NON-WATERWAY USE.

② CHECK LOCATION TO DETERMINE WHETHER A TONGUE OR A GROOVE IS USED.

③ FILL HOLE WITH GROUT. GROUT CONSISTS OF 1 PART CEMENT AND 2 PARTS SAND. USE TYPE 1A AIR ENTRAINED PORTLAND CEMENT. GROUT MIX MAXIMUM SLUMP IS 4".

④ 3'-6" MIN. TONGUE AND 3'-7" MIN. GROOVE FOR CULVERTS WITH 6'-0" SPANS. 5'-0" MIN. TONGUE AND 5'-1" MIN. GROOVE FOR CULVERTS WITH SPANS GREATER THAN 6'-0". CENTER TONGUE AND GROOVE ON ℄ OF EACH APRON JOINT. TONGUE AND GROOVE JOINT ON ALL THREE SIDES OF APRON IS PERMISSIBLE.

⑤ WELDED WIRE REINFORCEMENT OF EQUAL AREA MAY BE SUBSTITUTED FOR REBAR.

⑥ APRON TOP AND BOTTOM SLAB THICKNESS MAY BE 8" FOR CULVERTS WITH 6' SPANS ONLY. BOTTOM SLAB THICKNESS MAY BE INCREASED UP TO 2" MAX. PROVIDED CONCRETE COVER IS 1½" MIN., 2" MAX.

⑦ 10" MINIMUM TOP SLAB FOR 14' AND 16' SPANS.

⑧ PLACE LONGITUDINAL REINFORCEMENT PERPENDICULAR TO THE CULVERT SPAN WITH A MINIMUM OF 0.06 SQUARE INCHES PER PERIPHERAL FOOT ON ALL FACES OF THE BARREL.

⑨ REFER TO SPEC. 2412 FOR SEALANT REQUIREMENTS.

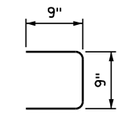

NO. 4 BENT BAR

Att, Atb REINFORCEMENT		
SPAN (FT.)	Att (IN²/FT.)	Atb (IN²/FT.)
6	0.27	0.44
8	0.47	0.60
10	0.62	0.74
12	0.88	1.06
14	1.20	1.58
16	1.52	2.09

Abt REINFORCEMENT	
SPAN (FT.)	Abt (IN²/FT.)
6-10	0.20
12	0.30
14	0.39
16	0.39

APRON DIMENSIONS & Ah REINFORCEMENT

RISE FT.	L FT.	SECTION 1 X	SECTION 1 Ah	h2	SECTION 2 Y	SECTION 2 Ah	h3	SECTION 3 Z	SECTION 3 Ah	h4	SECTION 4 ZZ	SECTION 4 Ah	h5	SECTION 5 ZZZ	SECTION 5 Ah	h6
4	8	8' (4')	0.192	1'-9" (3'-9")	(4')	(0.192)	(1'-9")									
5	10	6'	0.192	3'-9"	4'	0.192	1'-9"									
6	12	6'	0.192	4'-9"	6'	0.192	1'-9"									
7	14	6'	0.192	5'-9"	8' (4')	0.192	1'-9" (3'-9")	(4')	(0.192)	(1'-9")						
8	16	6'	0.20	6'-9"	6'	0.192	3'-9"	4'	0.192	1'-9"						
9	18	6'	0.29	7'-9"	6'	0.20	4'-9"	6'	0.192	1'-9"						
10	20	6'	0.42	8'-9"	6'	0.29	5'-9"	8' (4')	0.192	1'-9" (3'-9")	(4')	(0.192)	(1'-9")			
11	22	6'	0.60	9'-9"	6'	0.42	6'-9"	6'	0.192	3'-9"	4'	0.192	1'-9"			
12	24	6'	0.78	10'-9"	6'	0.60	7'-9"	6'	0.20	4'-9"	6'	0.192	1'-9"			
13	26	6'	1.03	11'-9"	6'	0.78	8'-9"	6'	0.28	5'-9"	8' (4')	0.192	1'-9" (3'-9")	(4')	(0.192)	(1'-9")
14	28	6'	1.38	12'-9"	6'	1.03	9'-9"	6'	0.40	6'-9"	6'	0.192	3'-9"	4'	0.192	1'-9"

NOTE: Ah IS AREA OF REINFORCEMENT PER FOOT OF LENGTH (IN²/FT.)
VALUES IN ( ) MAY BE USED FOR END SECTIONS WITH SPANS OF 14' AND 16' ONLY.

REVISION: FEBRUARY 22, 2018

APPROVED: MARCH 24, 2011
Nancy L. Daubenberger
STATE BRIDGE ENGINEER

STATE PROJ. NO - (T.H.) STA. + .

FIG. 5-395.102

CERTIFIED BY
LICENSED PROFESSIONAL ENGINEER DATE
NAME: LIC. NO.

TITLE: PRECAST CONCRETE END SECTION TYPE I - SINGLE OR DOUBLE BARREL
FOR SKEWS UP TO 7½°

DES: DR: APPROVED:
CHK: CHK:
SHEET NO. OF SHEETS

BRIDGE NO.