SIZE SPAN x RISE (ft.)	CLASS	f'c (psi)	FILL HEIGHT RANGE (ft.)	Tt (In.)	Tb (In.)	Ts (In.)	WEIGHT (lbs./ft.)	REINFORCEMENT REQUIREMENTS ①										
								As1			As2		As3		As4		As7/As8	
								As	LENGTH	M	As	LENGTH	As	LENGTH	As	LENGTH	As	LENGTH
12x4	1	5000	<3	9	10	8	4275	0.91	12'-9"	3'-10"	0.65	12'-6"	0.63	12'-6"	0.20	4'-6"	0.24	8'-10"
	2	5000	3 - 7	9	10	8	4275	0.83	12'-5"	3'-8"	0.63	12'-6"	0.63	12'-6"	0.20	4'-6"	0.24	8'-11"
	3	5000	7 - 15	10	10	9	4575	1.21	13'-11"	4'-5"	0.92	12'-6"	0.94	12'-6"	0.22	4'-6"	0.24	8'-11"
	4	6000	15 - 22	11	11	9	4925	1.57	14'-4"	4'-6"	1.25	12'-6"	1.26	12'-6"	0.22	4'-6"	0.27	8'-11"
12x5	1	5000	<3	9	10	8	4475	0.83	13'-6"	3'-9"	0.72	12'-6"	0.71	12'-6"	0.20	5'-6"	0.24	8'-10"
	2	5000	3 - 7	9	10	8	4475	0.74	13'-1"	3'-6"	0.70	12'-6"	0.71	12'-6"	0.20	5'-6"	0.24	8'-11"
	3	5000	7 - 15	10	10	8	4650	1.16	12'-7"	3'-3"	1.13	12'-6"	1.15	12'-6"	0.20	5'-6"	0.24	10'-11"
	4	6000	15 - 22	11	11	9	5150	1.36	13'-3"	3'-6"	1.37	12'-6"	1.39	12'-6"	0.22	5'-6"	0.27	10'-11"
12x6	1	5000	<3	9	10	8	4675	0.77	14'-3"	3'-7"	0.78	12'-6"	0.77	12'-6"	0.20	6'-6"	0.24	8'-10"
	2	5000	3 - 7	9	10	8	4675	0.66	12'-8"	2'-10"	0.75	12'-6"	0.77	12'-6"	0.20	6'-6"	0.24	10'-3"
	3	5000	7 - 15	10	10	8	4850	1.04	13'-2"	3'-0"	1.21	12'-6"	1.24	12'-6"	0.20	6'-6"	0.24	10'-11"
	4	6000	15 - 22	11	11	9	5375	1.23	13'-10"	3'-3"	1.49	12'-6"	1.52	12'-6"	0.22	6'-6"	0.27	10'-11"
12x7	1	5000	<3	9	10	8	4875	0.71	15'-1"	3'-6"	0.83	12'-6"	0.82	12'-6"	0.20	7'-6"	0.24	8'-11"
	2	5000	3 - 7	9	10	8	4875	0.61	13'-8"	2'-10"	0.80	12'-6"	0.82	12'-6"	0.20	7'-6"	0.24	10'-3"
	3	5000	7 - 15	10	10	8	5050	0.95	13'-9"	2'-10"	1.27	12'-6"	1.31	12'-6"	0.20	7'-6"	0.24	11'-0"
	4	6000	15 - 22	11	11	9	5600	1.12	14'-6"	3'-1"	1.56	12'-6"	1.60	12'-6"	0.22	7'-6"	0.27	10'-11"
12x8	1	5000	<3	9	10	8	5075	0.67	16'-0"	3'-6"	0.88	12'-6"	0.87	12'-6"	0.20	8'-6"	0.24	8'-11"
	2	5000	3 - 7	9	10	8	5075	0.57	14'-8"	2'-10"	0.84	12'-6"	0.87	12'-6"	0.20	8'-6"	0.24	10'-3"
	3	5000	7 - 15	10	10	8	5250	0.87	14'-9"	2'-10"	1.32	12'-6"	1.37	12'-6"	0.20	8'-6"	0.24	10'-9"
	4	6000	15 - 22	11	11	9	5825	1.04	15'-3"	3'-0"	1.62	12'-6"	1.67	12'-6"	0.22	8'-6"	0.27	10'-11"
12x9	1	5000	<3	9	10	8	5275	0.62	17'-0"	3'-6"	0.92	12'-6"	0.92	12'-6"	0.20	9'-6"	0.24	8'-11"
	2	5000	3 - 7	9	10	8	5275	0.53	15'-8"	2'-10"	0.87	12'-6"	0.92	12'-6"	0.20	9'-6"	0.24	10'-3"
	3	5000	7 - 15	10	10	8	5450	0.82	15'-9"	2'-10"	1.36	12'-6"	1.42	12'-6"	0.20	9'-6"	0.24	10'-7"
	4	6000	15 - 22	11	11	9	6050	0.97	16'-3"	3'-0"	1.66	12'-6"	1.72	12'-6"	0.22	9'-6"	0.27	10'-8"
12x10	1	5000	<3	9	10	8	5475	0.59	18'-0"	3'-6"	0.97	12'-6"	0.96	12'-6"	0.20	10'-6"	0.24	8'-11"
	2	5000	3 - 7	9	10	8	5475	0.50	16'-8"	2'-10"	0.90	12'-6"	0.96	12'-6"	0.20	10'-6"	0.24	10'-3"
	3	5000	7 - 15	10	10	8	5650	0.77	18'-3"	3'-7"	1.39	12'-6"	1.52	12'-6"	0.20	10'-6"	0.24	8'-11"
	4	6000	15 - 22	11	11	9	6275	0.92	18'-10"	3'-9"	1.69	12'-6"	1.76	12'-6"	0.22	10'-6"	0.27	8'-11"
12x11	1	5000	<3	9	10	8	5675	0.59	19'-0"	3'-6"	1.01	12'-6"	1.00	12'-6"	0.23	11'-6"	0.24	8'-11"
	2	5000	3 - 7	9	10	8	5675	0.51	19'-0"	3'-6"	0.93	12'-6"	1.00	12'-6"	0.23	11'-6"	0.24	8'-11"
	3	5000	7 - 15	10	10	8	5850	0.80	19'-4"	3'-7"	1.41	12'-6"	1.56	12'-6"	0.23	11'-6"	0.24	8'-11"
	4	6000	15 - 22	11	11	9	6500	0.92	19'-10"	3'-9"	1.71	12'-6"	1.79	12'-6"	0.23	11'-6"	0.27	8'-11"
12x12	1	5000	<3	9	10	8	5875	0.60	20'-0"	3'-6"	1.05	12'-6"	1.04	12'-6"	0.31	12'-6"	0.24	8'-11"
	2	5000	3 - 7	9	10	8	5875	0.60	21'-4"	4'-2"	0.96	12'-6"	1.04	12'-6"	0.31	12'-6"	0.24	7'-7"
	3	5000	7 - 15	10	10	9	6375	0.76	21'-7"	4'-3"	1.33	12'-6"	1.43	12'-6"	0.31	12'-6"	0.24	7'-9"
	4	6000	15 - 22	11	11	10	7075	0.89	20'-11"	3'-10"	1.62	12'-6"	1.71	12'-6"	0.31	12'-6"	0.27	8'-11"

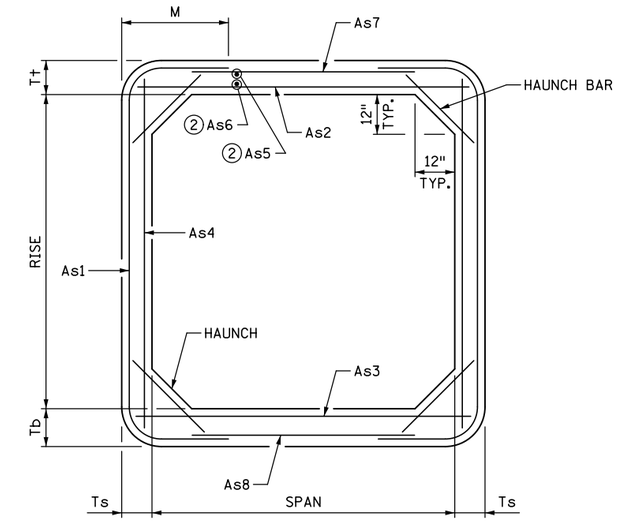

BOX CULVERT CROSS SECTION

GENERAL NOTES

SEE STANDARD FIG. 5-395.100(A) FOR BASIS OF DESIGN. FILL HEIGHT IS DEFINED AS THE DISTANCE FROM THE TOP OF THE CULVERT TO THE TOP OF THE PAVEMENT OR TO TOP OF FILL IF THERE IS NO PAVEMENT.

DESIGNS FOR FILL HEIGHTS GREATER THAN SHOWN IN THE TABLES ARE AVAILABLE FROM THE MnDOT BRIDGE OFFICE.

SEE STANDARD FIG. 5-395.101(A) AND FIG. 5-397.101(B) FOR ADDITIONAL INFORMATION. TRANSVERSE REINFORCEMENT IS PARALLEL TO THE CULVERT SPAN. LONGITUDINAL REINFORCEMENT IS PERPENDICULAR TO THE CULVERT SPAN.

IF THE FILL HEIGHT RANGE EXTENDS INTO MORE THAN ONE CLASS, USE THE CLASS WITH THE LARGEST STEEL AREAS. CHECK MAXIMUM AND MINIMUM FILL HEIGHTS OVER THE FULL AREA OF ROADWAY AND SHOULDERS.

ROADWAY OR SHOULDER FILL HEIGHTS OF LESS THAN 2'-0" REQUIRE A DISTRIBUTION SLAB. EXTEND THE WIDTH OF THE DISTRIBUTION SLAB TO THE OUTSIDE EDGES OF THE ROADWAY SHOULDERS UNLESS DIRECTED BY THE ENGINEER.

USE CONCRETE MIX 3S52 FOR THE DISTRIBUTION SLAB.

PLACE 6" THICK CAST-IN-PLACE DISTRIBUTION SLABS WITH NO. 5 BARS AT 1'-0" TRANSVERSELY AND NO. 5 BARS AT 1'-0" LONGITUDINALLY. EPOXY COAT ALL DISTRIBUTION SLAB REINFORCEMENT. CENTER DISTRIBUTION SLAB JOINTS OVER BARREL SEGMENTS. PROVIDE 3" MINIMUM GRANULAR MATERIAL PER SPEC. 3149.2.B.2 BETWEEN BARREL AND DISTRIBUTION SLAB.

PRECAST DISTRIBUTION SLABS WITH THE SAME REINFORCEMENT MAY BE USED FOR FILL HEIGHTS OVER 1'-0". CENTER DISTRIBUTION SLAB JOINTS OVER BARREL SEGMENTS. PROVIDE 6" MIN GRANULAR MATERIAL PER SPEC. 3149.2.B.2 BETWEEN BARREL AND DISTRIBUTION SLAB.

REDESIGN DISTRIBUTION SLAB PER THE MnDOT PAVEMENT DESIGN MANUAL IF IT IS USED AS PAVEMENT SURFACE.

CULVERT WEIGHT IS BASED ON 150 P.C.F. WITH A HAUNCH SIZE OF 12 INCHES.

① REINFORCEMENT AREAS ARE IN SQUARE INCHES PER LINEAL FOOT OF BARREL. ALL REINFORCEMENT LENGTHS AND AREAS ARE MINIMUM REQUIREMENTS. REINFORCEMENT REQUIREMENTS ARE FOR WELDED WIRE REINFORCEMENT WITH MINIMUM SPECIFIED YIELD STRESS OF 65 ksi. IF BAR REINFORCEMENT IS SUBSTITUTED FOR WELDED WIRE REINFORCEMENT, INCREASE THE AREA OF REINFORCEMENT BY 8%, AND SUBMIT DESIGN CALCULATIONS VERIFYING COMPLIANCE WITH AASHTO 5.7.3.4 "CONTROL CRACKING BY DISTRIBUTION OF REINFORCEMENT".

② PLACE LONGITUDINAL REINFORCEMENT DENOTED AS As5 AND As6 IN ALL SLABS AND WALLS WITH A MINIMUM OF .06 IN^2/FT.

REVISION: 10-09-2015

APPROVED: MARCH 24, 2011

Nancy Daubenberger
STATE BRIDGE ENGINEER

DO NOT INCLUDE TABLES WITH PLAN

FIG. 5-395.100(C)

TITLE:
PRECAST CONCRETE BOX CULVERT TABLES