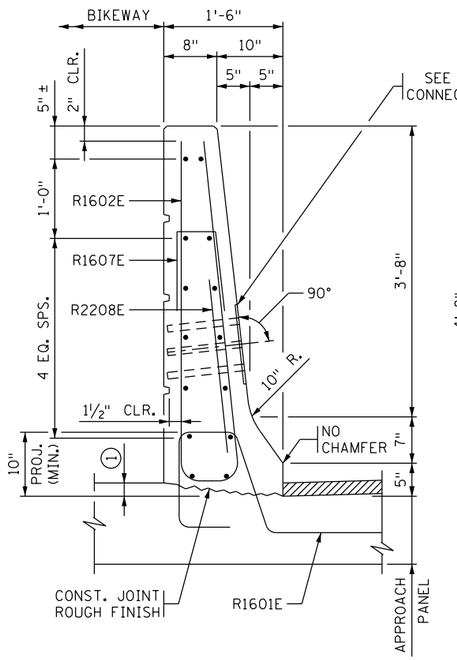


SECTION A-A

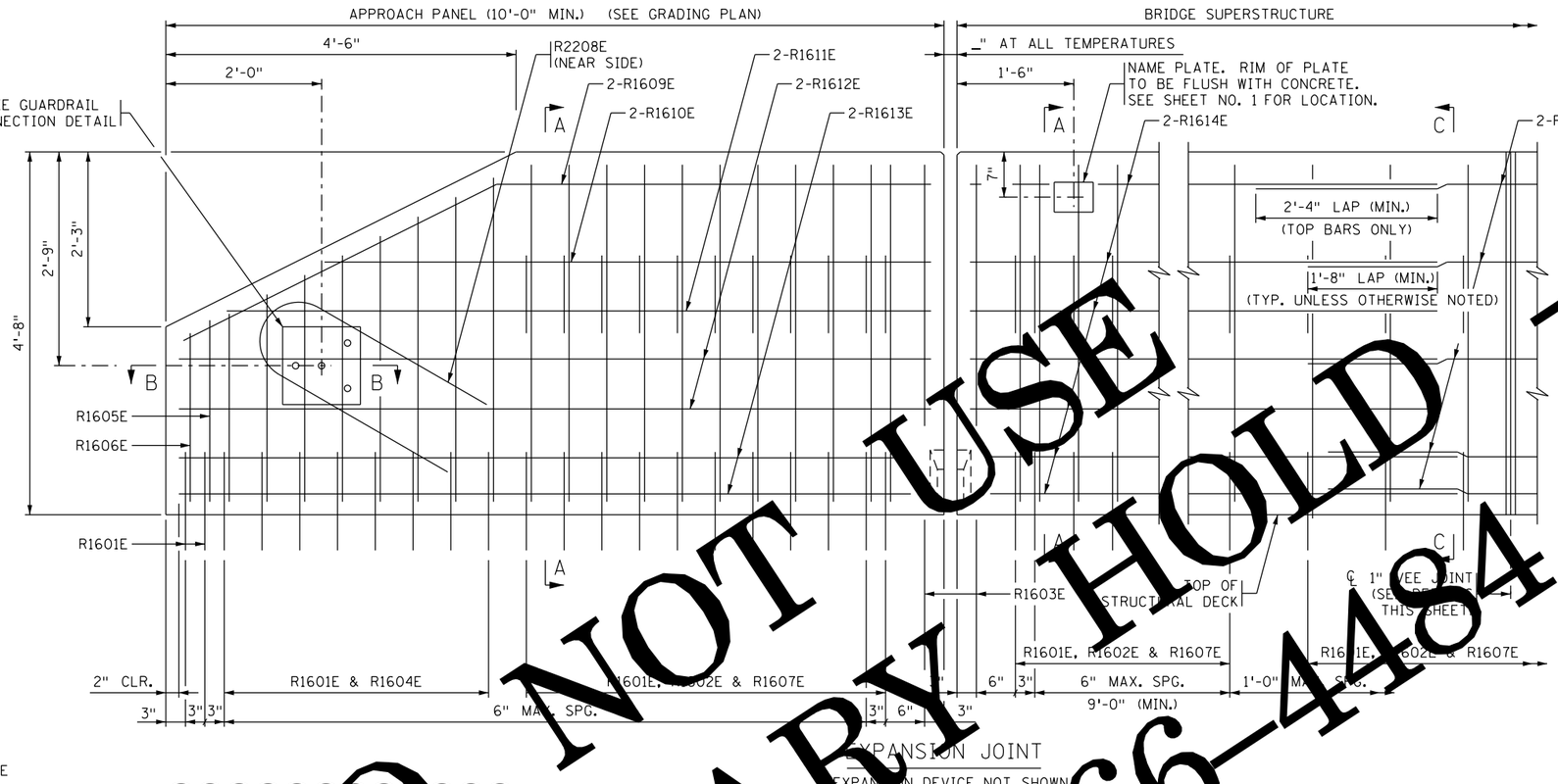


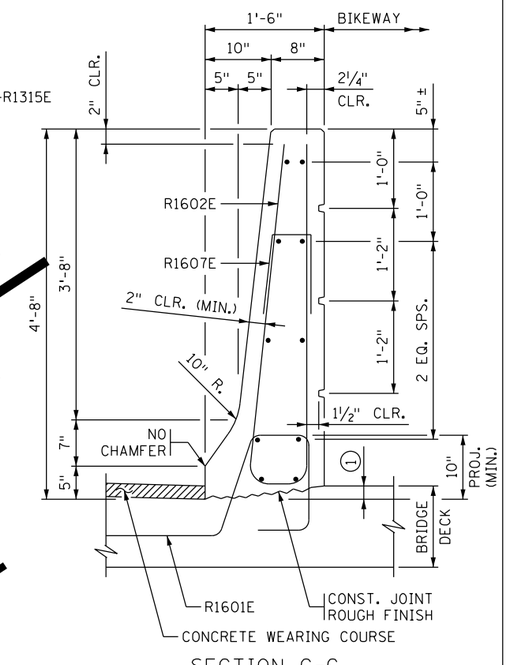


SECTION C-C

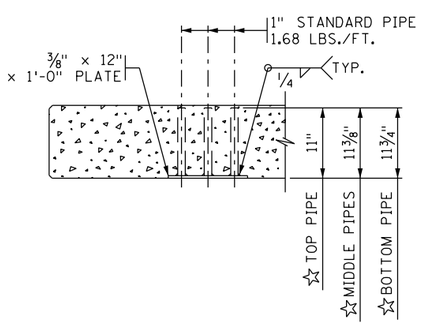


SECTION B-B

(REINFORCEMENT NOT SHOWN)
☆ DIMENSIONS INCLUDE ⅜" PLATE

DESIGN NOTES
(REMOVE PRIOR TO PLACING FINAL PLAN):
CHECK WITH ROADWAY DESIGNERS FOR SIGHT DISTANCE REQUIREMENTS.

VERIFY THAT R1601E HAS 10" MIN. PROJECTION WHEN CROSS SLOPE VARIES FROM NORMAL 0.02 FT/FT.

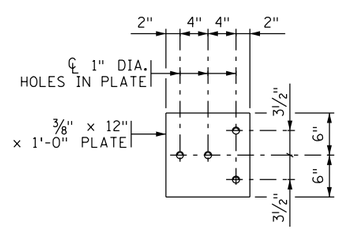


GUARDRAIL CONNECTION DETAIL

GALVANIZE AFTER FABRICATION PER Mn/DOT SPEC. 3394
ESTIMATED WEIGHT = 22 LBS

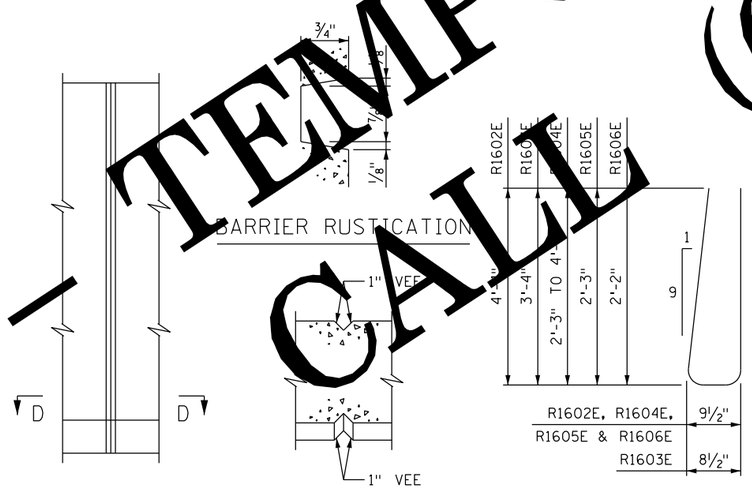


ELEVATION

SECTION D-D

R1602E, R1603E, R1604E, R1605E & R1606E

VEE JOINT DETAILS

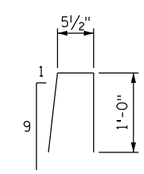


R1607E

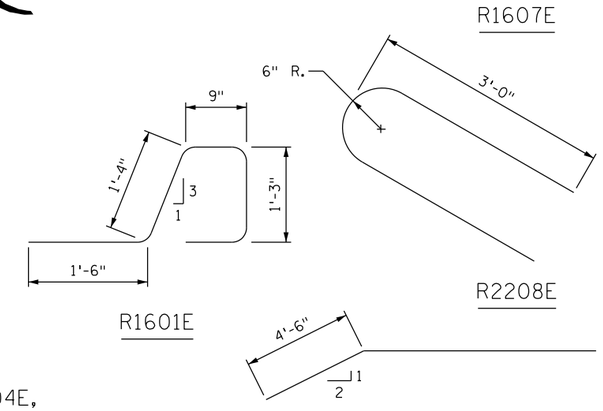


R1601E

R2208E

R1609E

## BILL OF REINFORCEMENT FOR BARRIER

| BAR | NO. | LENGTH | SHAPE | LOCATION |
|---|---|---|---|---|
| R1601E | ___ | 5'-5" | | BARRIER DOWEL |
| R1602E | ___ | 9'-5" | | BARRIER VERTICAL |
| R1603E | ___ | 7'-5" | | BARRIER VERTICAL |
| R1604E | ___ SER. OF 8 | 5'-3" TO 8'-9" | | BARRIER VERTICAL |
| R1605E | ___ | 5'-4" | | BARRIER VERTICAL |
| R1606E | ___ | 5'-2" | | BARRIER VERTICAL |
| R1607E | ___ | 2'-6" | | BARRIER TIE |
| R2208E | ___ | 6'-6" | | BARRIER VERTICAL |
| R1609E | ___ | _____ | | BARRIER LONGIT. |
| R1610E | ___ | _____ | | BARRIER LONGIT. |
| R1611E | ___ | _____ | | BARRIER LONGIT. |
| R1612E | ___ | _____ | | BARRIER LONGIT. |
| R1613E | ___ | _____ | | BARRIER LONGIT. |
| R1614E | ___ | 12'-6" | | BARRIER LONGIT. |
| R1315E | ___ | _____ | | BARRIER LONGIT. |
| | | | | |

## GENERAL NOTES

LENGTH OF "TYPE F (TL-5) WITH BIKEWAY RAILING CONCRETE (3Y46 OR 3Y46A)" FOR PAYMENT SHALL BE MEASURED BETWEEN THE OUTSIDE FACES OF THE CONCRETE BARRIER.

CONCRETE BARRIER = 670 LBS./FT. (0.165 CU. YDS./FT.)

FINISH ALL EDGES OF BARRIER WITH ½" VEE, EXCEPT WHERE OTHERWISE NOTED.

MAXIMUM SPACING OF 1" VEE JOINTS SHALL BE 10 FT.

GUARDRAIL CONNECTION TO BE STRUCTURAL STEEL, Mn/DOT SPEC. 3306.

GUARDRAIL CONNECTION AND NAME PLATE TO BE CONSIDERED INCIDENTAL TO "TYPE F (TL-5) WITH BIKEWAY RAILING CONCRETE (3Y46 OR 3Y46A)".

BARRIER QUANTITIES ARE LISTED IN SUMMARY OF QUANTITIES FOR SUPERSTRUCTURE.

① DIMENSIONS TO BE DETERMINED BASED ON THE BRIDGE DECK SLOPE.

DO NOT USE
TEMPORARY HOLD
CALL (651) 366-4484

REVISED:

APPROVED: JUNE 14, 2006
Daniel L. Dorgan
STATE BRIDGE ENGINEER

CERTIFIED BY _____ LICENSED PROFESSIONAL ENGINEER _____ DATE
NAME: _____ LIC. NO. _____

TITLE: CONCRETE BARRIER (TYPE F, TL-5)
WITH BIKEWAY AND INTEGRAL END POST
(WITH CONC. WEARING COURSE)

DES: _____ DR: _____
CHK: _____ CHK: _____
SHEET NO. __ OF __ SHEETS

APPROVED:

FIG. 5-397.129

BRIDGE NO. _____