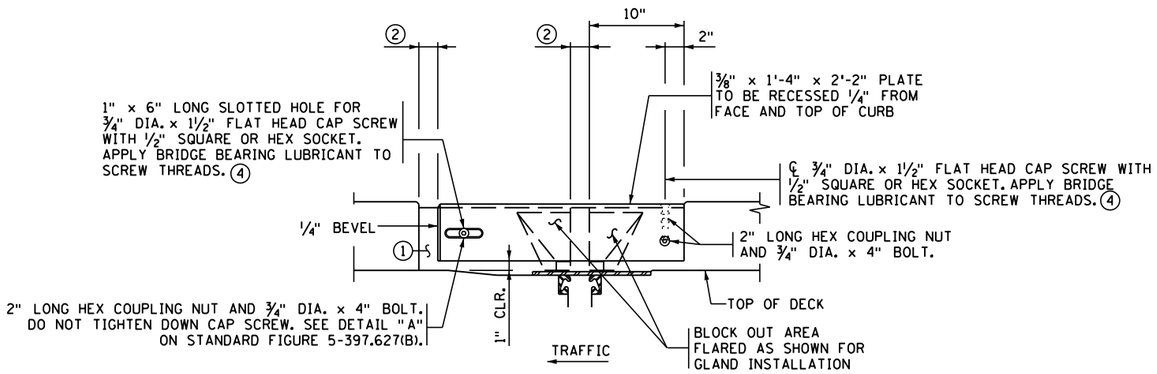

INSIDE ELEVATION OF CONCRETE CURB

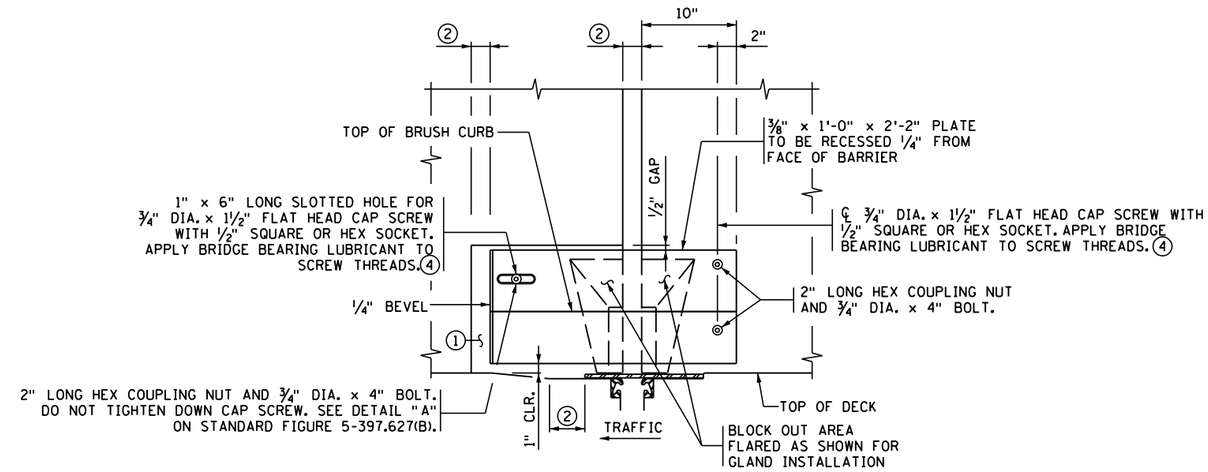

OUTSIDE ELEVATION OF S BARRIER

(BACK OF TYPE S BARRIER)

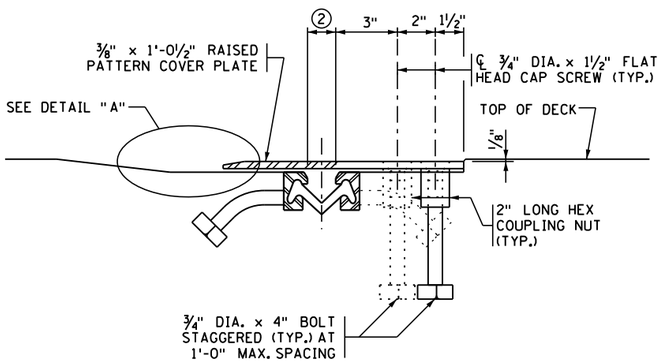

SECTION D-D 3

(INTEGRAL SIDEWALK)

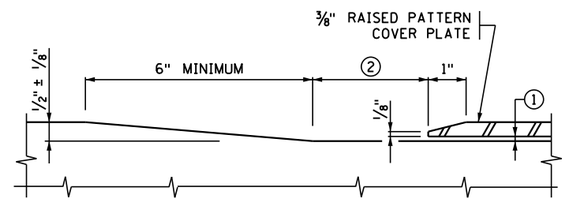

DETAIL "A" 3

GENERAL NOTES

SEE OTHER WATERPROOF EXPANSION DEVICE SHEET FOR ADDITIONAL DETAILS AND NOTES.

TRANSVERSE DECK REINFORCEMENT MAY BE SHIFTED THE MINIMUM DISTANCE REQUIRED FOR EXPANSION DEVICE PLACEMENT.

3/4" DIA. X 1 1/2" FLAT HEAD CAP SCREW WITH 1/2" SQUARE OR HEX SOCKET PER SPEC 3391. COUNTERSINK CAP SCREWS 1/16" FROM TOP OF PLATE. APPLY BRIDGE BEARING LUBRICANT TO SCREW THREADS. 4

1 PROVIDE SMOOTH CONCRETE FINISH BENEATH PLATE WITH 0" MIN. TO 1/8" MAX. GAP BETWEEN CONCRETE AND UNDERSIDE OF PLATE. PROVIDE BOND BREAKER (DUCT TAPE, ETC.) TO UNDERSIDE OF COVER PLATE.

2 SEE NOTE 2 ON OTHER WATERPROOF EXPANSION DEVICE SHEET.

3 DIMENSIONS SHOWN ARE REQUIRED TO COMPLY WITH A.D.A. STANDARDS.

4 LUBRICANT PER MnDOT APPROVED/QUALIFIED PRODUCTS LIST: BRIDGE GREASE.

DESIGNER NOTE (REMOVE PRIOR TO PLOTTING FINAL PLAN): ALWAYS INCLUDE STANDARD FIGURE 5-397.627(B) ALONG WITH THIS SHEET.

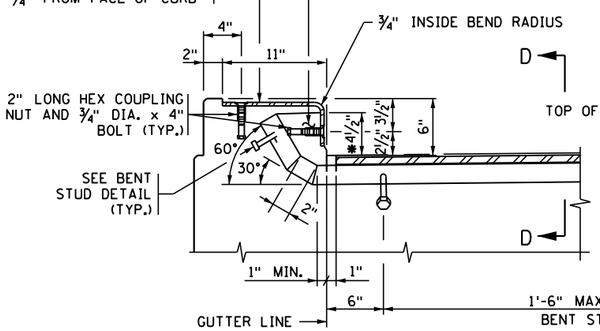

CONCRETE CURB

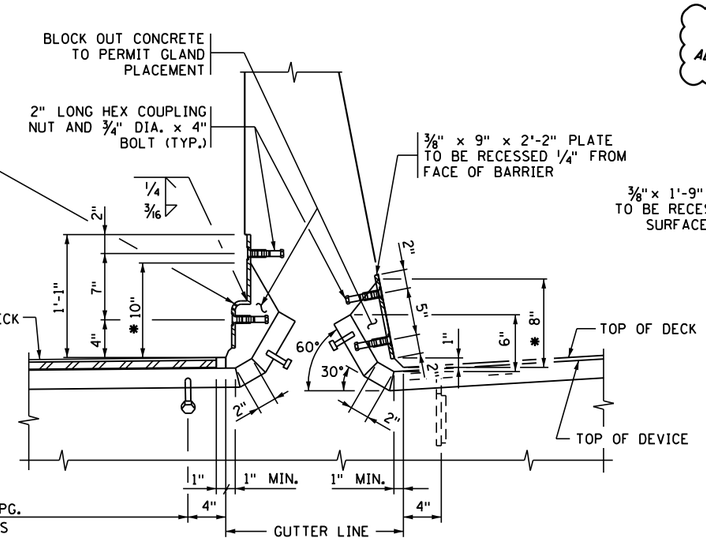

TYPE S BARRIER

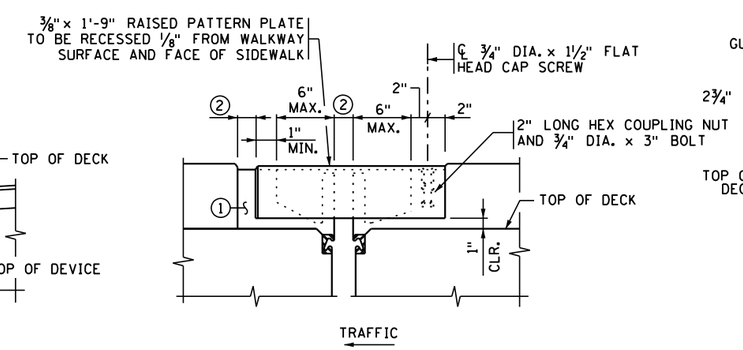

MEDIAN ELEVATION

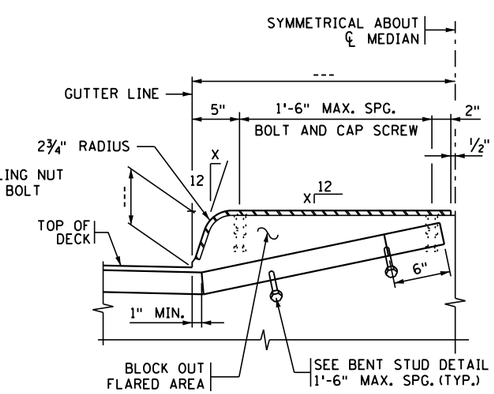

MEDIAN SECTION

SECTION THROUGH BARRIER AND CURB - INTEGRAL SIDEWALK

REVISION: OCTOBER 22, 2019

APPROVED: AUGUST 24, 2016

Kevin Western

STATE BRIDGE ENGINEER

CERTIFIED BY _____ LICENSED PROFESSIONAL ENGINEER _____ DATE

NAME: LIC. NO.

TITLE: WATERPROOF EXPANSION DEVICE (RAISED MEDIAN OR INTEGRAL SIDEWALK WITH S BARRIER AND CURB)

DES: DR: CHK: CHK:

APPROVED:

SHEET NO. OF SHEETS

FIG. 5-397.632(B)

BRIDGE NO.