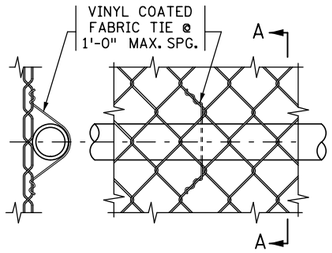

SECTION A-A PARTIAL ELEVATION

FABRIC TIE

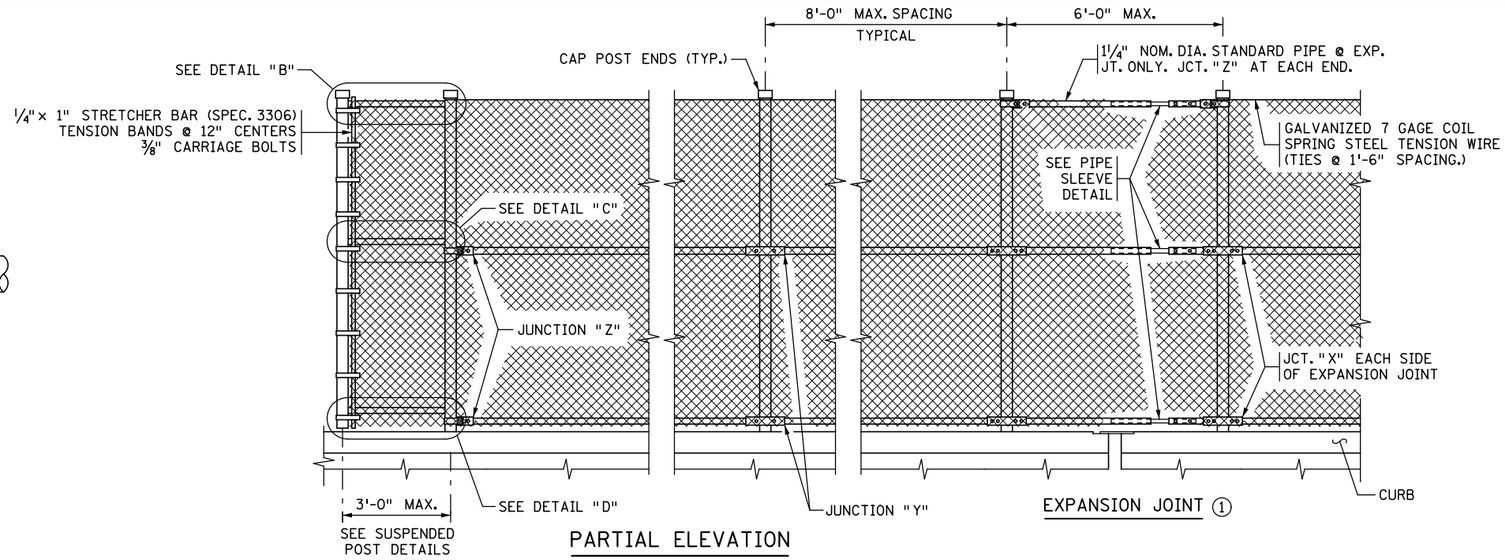

EXPANSION JOINT ①

PARTIAL ELEVATION

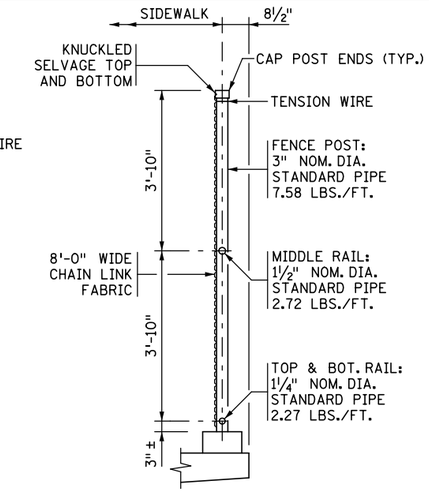

TYPICAL SECTION THRU FENCE

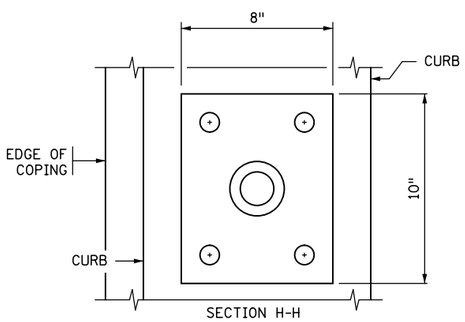

SECTION H-H
(BOLTS NOT SHOWN)

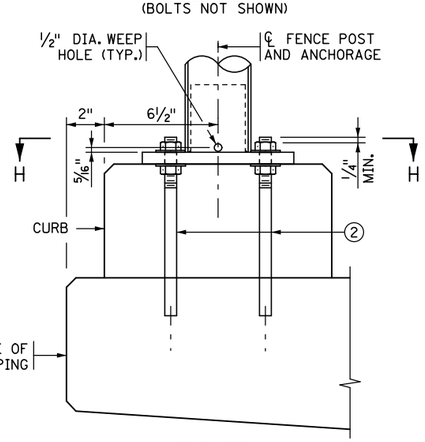

ELEVATION

BOLT ANCHORAGE FOR FENCE POSTS

FOR SLAB THICKNESS OF 7" (MIN.)

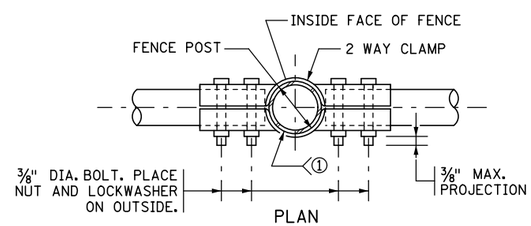

PLAN

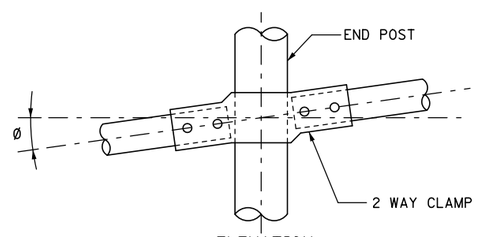

ELEVATION

JUNCTION "X"

2 WAY CLAMP BENDING TABLE	
GRADE OF FENCE	Ø
0° TO 2°	0°
2° TO 6°	4°
6° TO 10°	8°

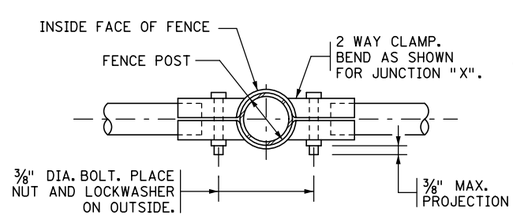

JUNCTION "Y"

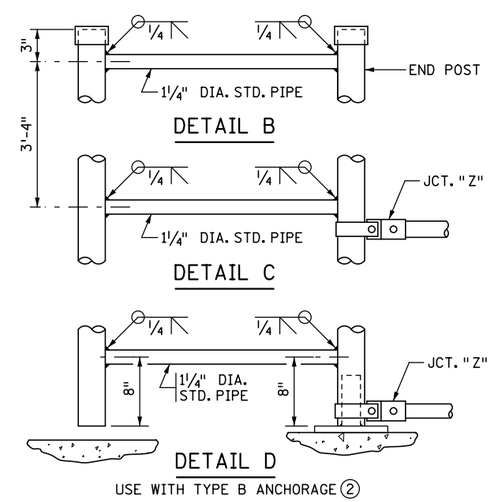

DETAIL B

DETAIL C

DETAIL D

USE WITH TYPE B ANCHORAGE ②

SUSPENDED POST DETAILS

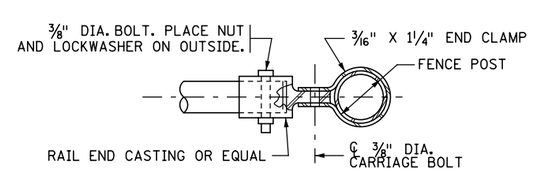

JUNCTION "Z"

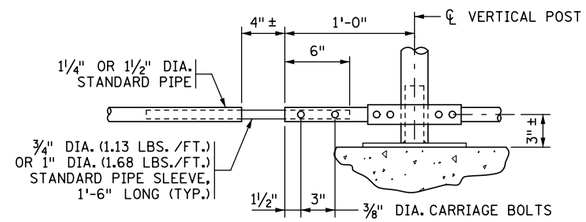

PIPE SLEEVE DETAIL ①

FOR 4" MAXIMUM BRIDGE EXPANSION

GENERAL NOTES

REFER TO SPEC. 2557 AND SPECIAL PROVISIONS FOR ADDITIONAL REQUIREMENTS AND BASIS OF PAYMENT.

REFER TO CONCRETE CURB PLAN SHEET FOR CURB DETAILS AND REINFORCEMENT.

MEASURE THE LENGTH OF WIRE FENCE FOR PAYMENT BETWEEN THE CENTERS OF END RAILPOSTS.

CONTINUOUSLY GROUND ALL METAL FENCE; SEE THE SPECIAL PROVISIONS. REFER TO THE ELECTRICAL PLANS AND ELECTRICAL SPECIAL PROVISIONS FOR DETAILS REGARDING BONDING MULTIPLE ELECTRICAL GROUNDING SYSTEMS.

ALL PIPE DIAMETERS ARE NOMINAL.

MAX. SPACING FOR 3" STANDARD PIPE POSTS IS 8 FT.

INSTALL FENCE POSTS AND ANCHORAGES VERTICAL UNLESS OTHERWISE NOTED. FOR POST SPACING, LOCATION, ANCHORAGE TYPE AND OTHER DETAILS SEE PLAN SHEET NO. ____.

INSTALL ALL POSTS WITH A MEANS TO SECURELY HOLD THE TOP TENSION WIRE IN POSITION AND ALLOW FOR THE REMOVAL AND REPLACEMENT OF A POST WITHOUT DAMAGING THE TOP TENSION WIRE.

PROVIDE WIRE TIES WITH 9 GA. (0.148" CORE) ALUMINUM PER ASTM B 211, ALLOY 1100 H18 WITH VINYL COATING (6 GA. AFTER COATING) OR 10 GA. (0.135" CORE) STEEL CL. 3 GALV. WIRE WITH FUSION BONDED VINYL COATING (9 GA. AFTER COATING). USE SAME VINYL THICKNESS COATING REQUIREMENTS AS VINYL COATED FABRIC.

USE 12 GA. GALVANIZED STEEL OR 9 GA. ALUMINUM ALLOY 1350-H19 HOG RINGS FOR TENSION WIRE TIES.

① PROVIDE PIPE SLEEVE IN SPAN BETWEEN THE VERTICAL FENCE POSTS AT EXPANSION JOINT. SEE SUPERSTRUCTURE SHEETS FOR EXP. JOINT LOCATION.

② FURNISH AND INSTALL TYPE B FENCE POST ANCHORAGES PER B906 FENCE POST ANCHORAGE PLAN SHEET.

REVISION:

APPROVED: JANUARY 05, 2017
Kevin Western
STATE BRIDGE ENGINEER

CERTIFIED BY _____ LICENSED PROFESSIONAL ENGINEER _____ DATE
NAME: LIC. NO.

TITLE: 8 FT. WIRE FENCE FOR PEDESTRIAN WALKS

DES: DR: CHK: CHK:

SHEET NO. OF SHEETS

FIG. 5-397.205

APPROVED:

BRIDGE NO.