DESIGNER NOTE:
CHOOSE ONE JOINT OPENING NOTE AND DELETE OTHER. MAX. 4".

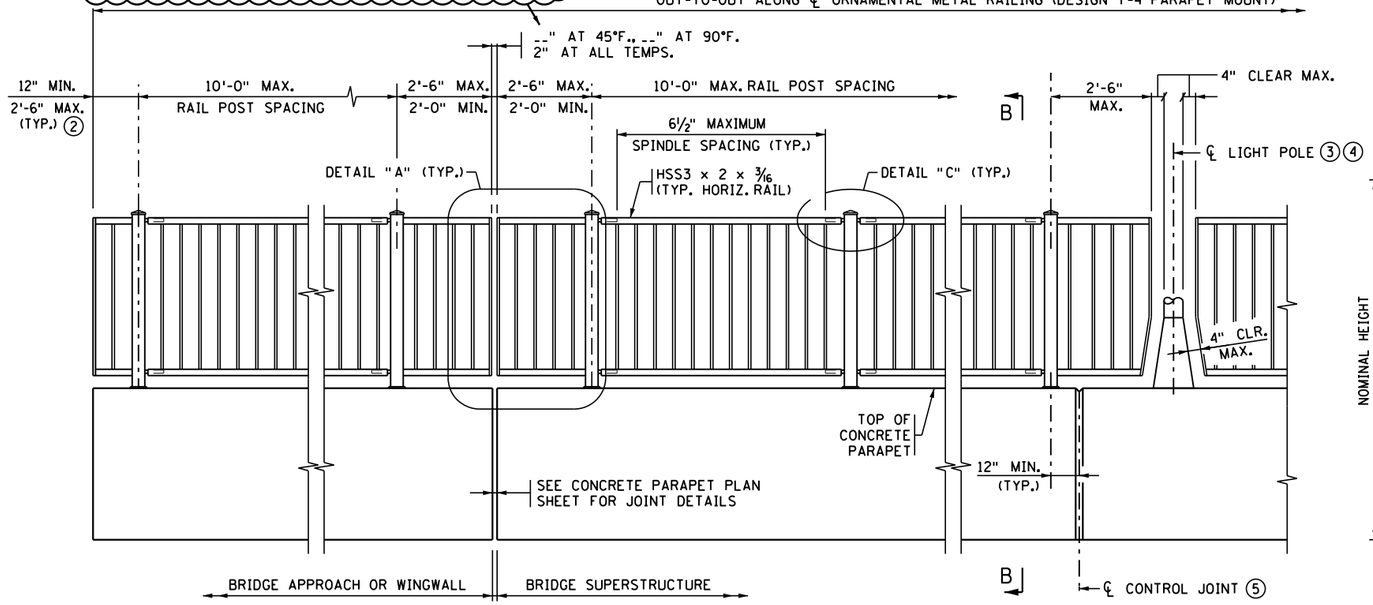

INSIDE ELEVATION OF RAILING

RAILING HEIGHT TABLE		
NOMINAL HEIGHT	Ⓐ	Ⓑ
4'-6"	1'-10"	1'-2"
6'-0"	3'-4"	2'-8"
8'-0"	5'-4"	4'-8"
10'-0"	7'-4"	6'-8"

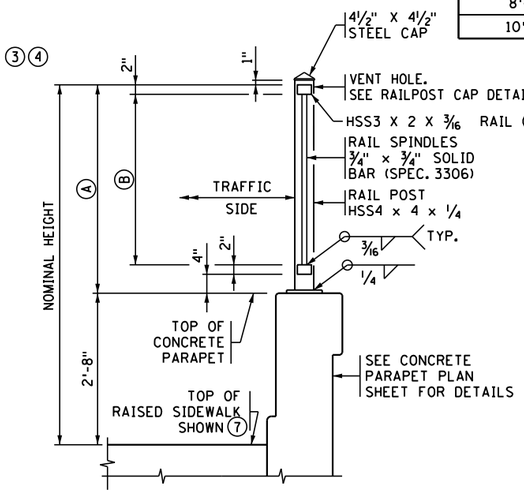

SECTION B-B
(6'-0" TALL OPTION SHOWN)

DESIGNER NOTE
(REMOVE PRIOR TO PLOTTING FINAL PLAN):
FOR ROADWAY DESIGN SPEEDS GREATER THAN 45 MPH T-5 ORNAMENTAL RAILINGS MUST BE PROTECTED BY A TRAFFIC BARRIER.
CHOOSE ONE HEIGHT FROM RAILING HEIGHT TABLE AND CROSS OUT OTHER HEIGHTS. RAIL HEIGHTS GREATER THAN SHOWN REQUIRE SPECIAL DESIGN.

GENERAL NOTES

CONTINUOUSLY GROUND ALL METAL RAILINGS; SEE THE SPECIAL PROVISIONS. REFER TO THE ELECTRICAL PLANS AND ELECTRICAL SPECIAL PROVISIONS FOR DETAILS REGARDING BONDING MULTIPLE ELECTRICAL GROUNDING SYSTEMS.

PAYMENT LENGTH SHALL BE MEASURED AS THE OUT TO OUT LENGTH ALONG THE CENTERLINE OF THE RAILING BETWEEN THE OUTSIDE ENDS, WITH DEDUCTIONS FOR THE LENGTH OF CONCRETE POSTS, IF PRESENT.

PROVIDE A500, GRADE B STRUCTURAL STEEL TUBING (HSS) IN THE RAIL CONFORMING TO SPEC. 3361. PROVIDE ALL OTHER STEEL IN ACCORDANCE WITH SPEC. 3306.

GALVANIZE BOLTS, NUTS, WASHERS AND ANCHORS IN ACCORDANCE WITH SPEC. 3392. GALVANIZE ALL OTHER STRUCTURAL STEEL IN ACCORDANCE WITH SPEC. 3394, AFTER FABRICATION.

SEE SPECIAL PROVISIONS FOR COATING TO BE APPPLIED TO METAL RAILING.

INSTALL RAIL POSTS AND SPINDLES *[NORMAL TO GRADE OR PLUMB.]*

DESIGNER NOTE
(REMOVE PRIOR TO PLOTTING FINAL PLAN):
DESIGNER SHALL CONSULT WITH BRIDGE OFFICE ARCHITECTURAL SPECIALIST TO CHOOSE ONE OPTION (NORMAL OR PLUMB) AND DELETE THE OTHER.

CURVE HORIZONTAL RAILS WHERE APPLICABLE AND PLACE RAILS PARALLEL TO THE EDGE OF SIDEWALK PROFILE.

SEE SPECIAL PROVISIONS FOR REQUIREMENTS NOT INCLUDED ON THIS SHEET.

DRILL ½" DIA. MAX. VENT HOLES ON THE UNDERSIDE OF RAIL TUBES AS NECESSARY TO FACILITATE GALVANIZING.

① DRILL VENT HOLE IN THE RAIL POST WITHIN 2" OF THE UNDERSIDE OF THE CAP, ON THE NON-TRAFFIC SIDE OF THE POST AS NECESSARY TO FACILITATE GALVANIZING. MAXIMUM HOLE SIZE IS ½" DIA.

② PLACE ℄ OF END POST 12" FROM END OF CONCRETE PARAPET IF GUARDRAIL CONNECTION PLATE IS PRESENT.

③ IF LIGHT POLE IS MOUNTED ON BLISTER, RAILING MAY BE CONTINUOUS IN FRONT OF LIGHT POLE (SEE PARAPET & LIGHT POLE DETAILS).

④ CONTRACTOR TO COORDINATE LIGHT POLE DETAILS WITH THE RAILING FABRICATOR TO ENSURE PROPER CLEARANCES AND RAILING CONFIGURATION ADJACENT TO THE POLE.

⑤ SEE SUPERSTRUCTURE AND CONCRETE PARAPET PLAN SHEETS FOR CONTROL JOINT SPACING AND DETAILS.

⑥ PROVIDE A PYRAMID TOP STYLE STEEL CAP WELDED TO TOP OF POST WITH A SURFACE FINISH OF 1000 MICRO-INCH, OR SMOOTHER, PRIOR TO GALVANIZING.

⑦ FOR NON-RAISED SIDEWALK, SEE CONCRETE PARAPET PLAN SHEET.

⑧ ADHESIVE ANCHORAGE WITH ⅝" DIA. ANCHOR ROD IN ACCORDANCE WITH SPEC. 3385, TYPE A WITH HEX NUT AND WASHER. PROVIDE AN ADHESIVE WITH A MINIMUM CHARACTERISTIC BOND STRENGTH IN UNCRACKED CONCRETE OF 1.5 KSI. EMBED THE ANCHORAGE NO LESS THAN 5" REGARDLESS OF CHARACTERISTIC BOND STRENGTH. DRILL THROUGH REINFORCEMENT (IF ENCOUNTERED) TO ACHIEVE MINIMUM EMBEDMENT. ENSURE HEX NUT IS IN CONTACT WITH THE ADJACENT SURFACE AND TORQUE TO 60 FT-LBS UNLESS A HIGHER TORQUE IS RECOMMENDED BY THE MANUFACTURER. PROOF LOAD TO 6.9 KIPS. SEE SPECIAL PROVISIONS FOR ADDITIONAL REQUIREMENTS.

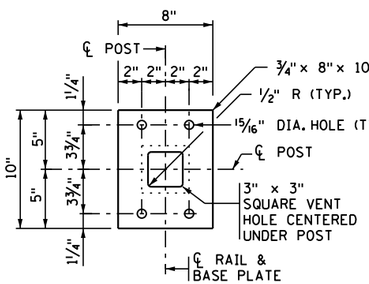

BASE PLATE

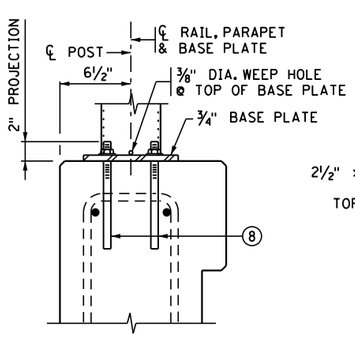

ANCHOR DETAIL

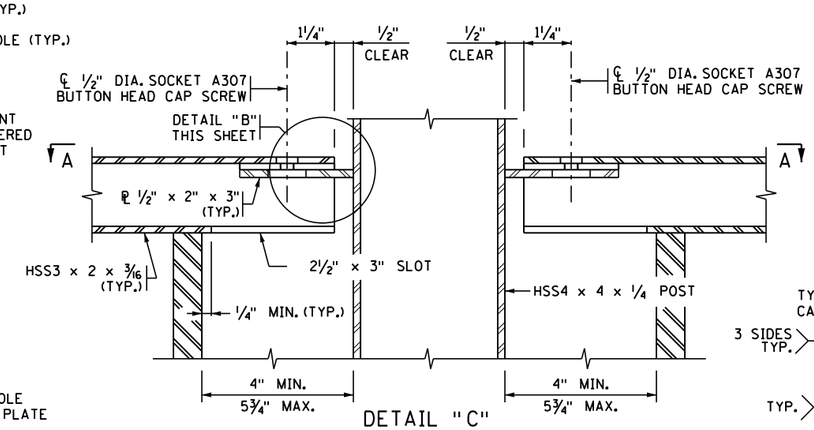

DETAIL "C"

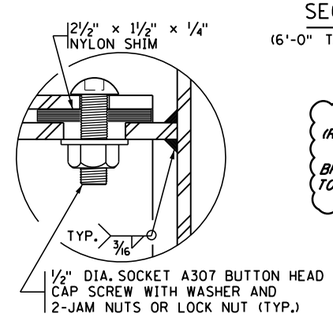

DETAIL "B"

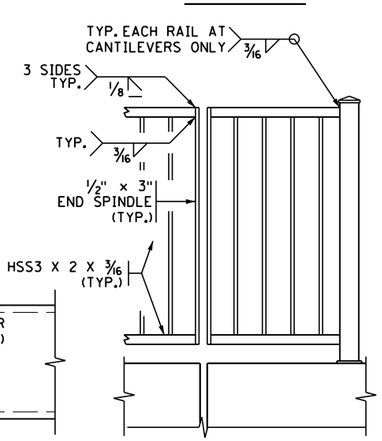

DETAIL "A"

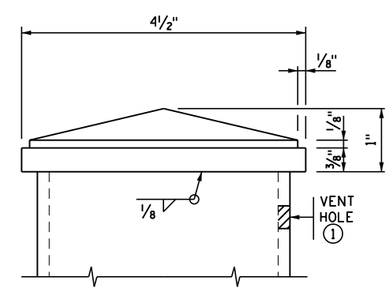

RAILPOST CAP DETAIL ⑥

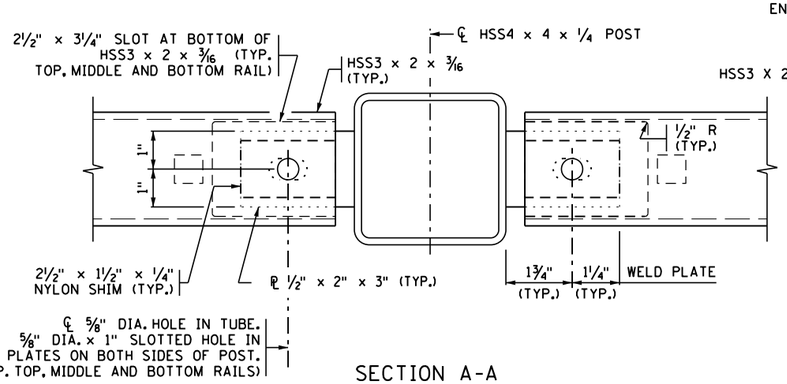

SECTION A-A

REVISION: OCTOBER 22, 2019

APPROVED: FEBRUARY 22, 2018
Kevin Western
STATE BRIDGE ENGINEER

CERTIFIED BY _____ LICENSED PROFESSIONAL ENGINEER _____ DATE
NAME: LIC. NO.

TITLE: ORNAMENTAL METAL RAILING (DESIGN T-5 PARAPET MOUNT)

DES:	DR:	APPROVED:	FIG. 5-397.164
CHK:	CHK:		BRIDGE NO.
SHEET NO. OF SHEETS			