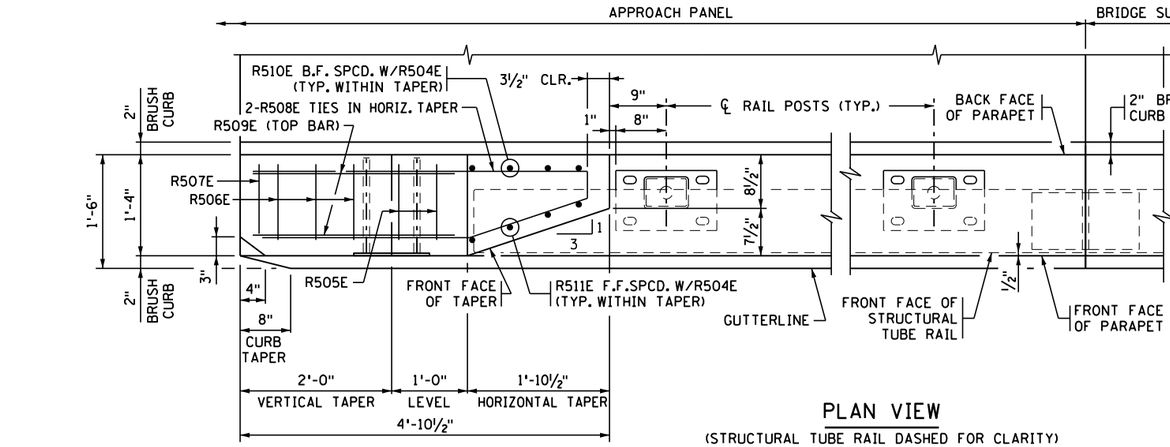

PLAN VIEW

(STRUCTURAL TUBE RAIL DASHED FOR CLARITY)

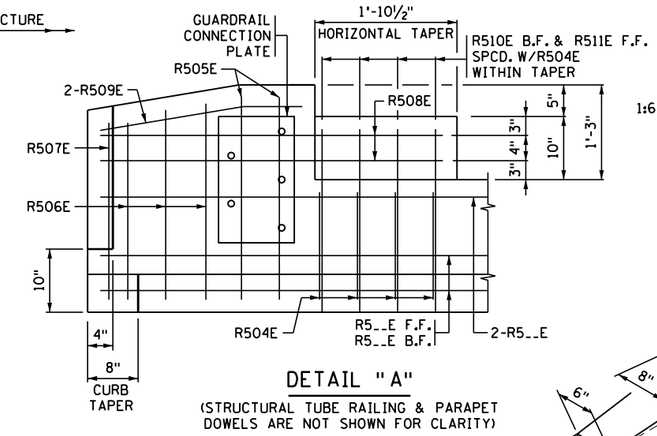

DETAIL "A"

(STRUCTURAL TUBE RAILING & PARAPET DOWELS ARE NOT SHOWN FOR CLARITY)

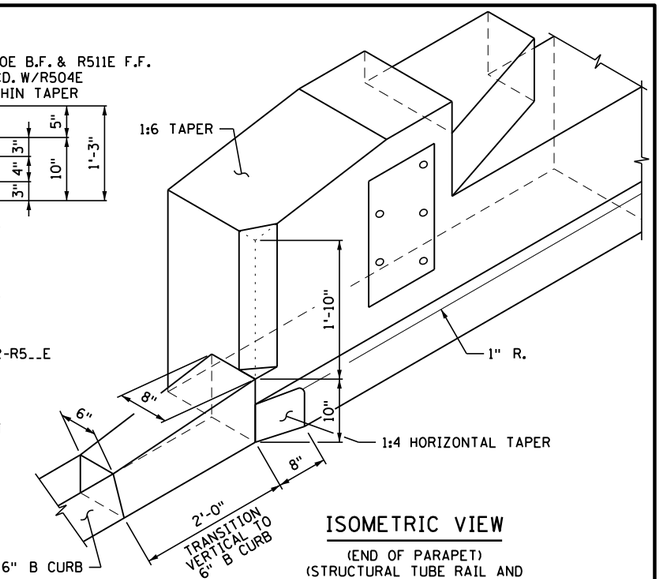

ISOMETRIC VIEW

(END OF PARAPET)
(STRUCTURAL TUBE RAIL AND BRIDGE SLAB SIDEWALK NOT SHOWN)

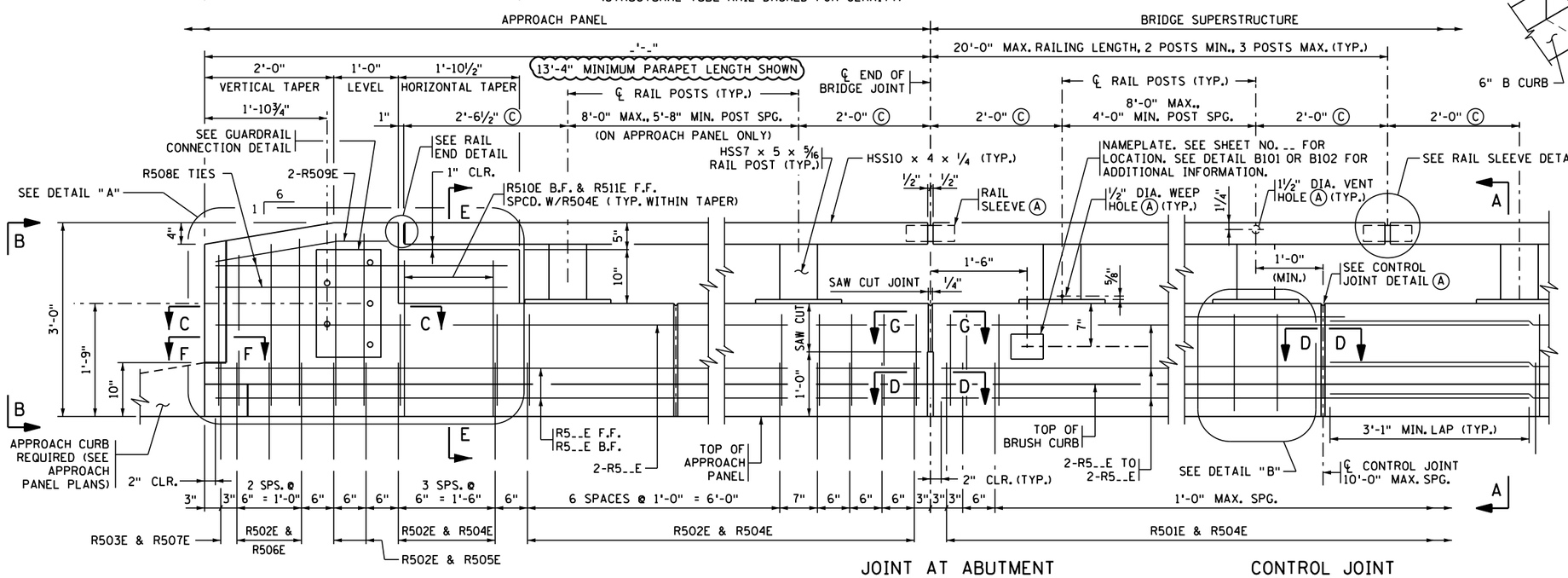

JOINT AT ABUTMENT

(INTEGRAL OR SEMI-INTEGRAL ABUTMENT)

CONTROL JOINT

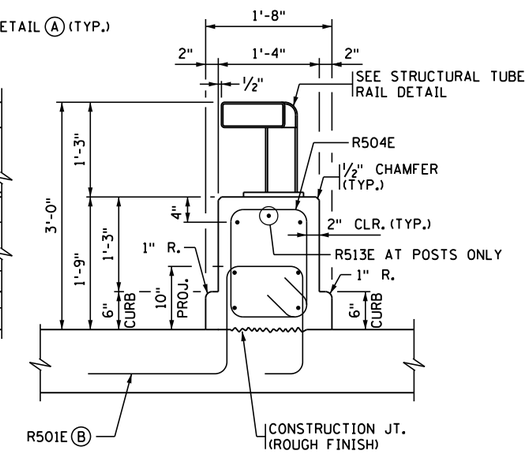

SECTION A-A

INSIDE ELEVATION OF PARAPET/RAILING

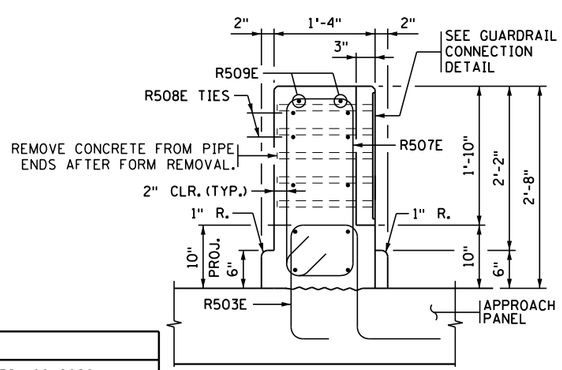

END VIEW B-B

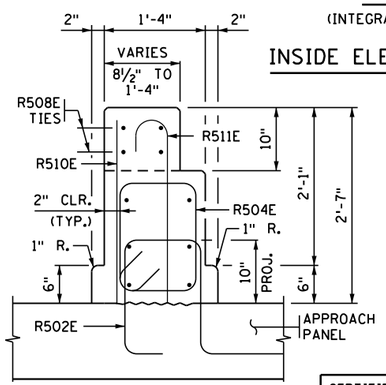

SECTION E-E

(STRUCTURAL TUBE RAIL NOT SHOWN)

DESIGNER NOTE
(REMOVE PRIOR TO PRINTING FINAL PLAN):

FOR BRIDGES WITH SUPERELEVATION EXCEEDING 2%, SHOW DIMENSIONS FOR BOTH THE FRONT AND BACK FACE OF THE PARAPET. ALSO VERIFY THAT BAR R501E HAS 10" MIN. PROJECTION WHEN CROSS SLOPE VARIES FROM NORMAL 0.02 FT/FT

PARAPET/RAILING COMBINATION MEETS TL-4 REQUIREMENTS OF NCHRP REPORT 350 ON BRIDGE DECK AND TL-3 ON APPROACH PANEL

DESIGNER NOTE
(REMOVE PRIOR TO PRINTING FINAL PLAN):

MINIMUM BARRIER LENGTH ON APPROACH PANEL IS 13'-4" WITH MINIMUM OF 21 R502E & R503E DOWELS WITH ACCOMPANYING APPROPRIATE PARAPET VERTICAL BARS. VERIFY APPROACH PARAPET LENGTH WITH ROADWAY DESIGNER.

REFER TO MEMO TO DESIGNERS #2020-01 FOR ADDITIONAL REQUIREMENTS REGARDING BARRIER PLACEMENT.

NOTES:

F.F. DENOTES FRONT FACE
B.F. DENOTES BACK FACE

(A) SEE SHEET 2 OF 2 FOR DETAILS.

(B) PLACE BAR ON TOP OF BOTTOM REINFORCEMENT MAT IN DECK.

(C) STRUCTURAL TUBE RAIL CANTILEVER DIMENSIONS ARE BASED ON SUCCESSFUL CRASH TESTS AND SHOULD NOT BE MODIFIED.

CODE 51

FIG. 5-397.157(C) (1 OF 2)

REVISED:

APPROVED: APRIL 09, 2020
Kevin Western
STATE BRIDGE ENGINEER

CERTIFIED BY _____ LICENSED PROFESSIONAL ENGINEER _____ DATE
NAME: LIC. NO.

TITLE: STRUCTURAL TUBE RAILING (DESIGN T-1) AND CONCRETE PARAPET (TYPE P-2, TL-4)
INTEGRAL OR SEMI-INTEGRAL ABUTMENT WITH BRIDGE SLAB SIDEWALK AND GUARDRAIL CONNECTION (WITHOUT CONCRETE WEARING COURSE)

DES: DR: CHK: CHK:

APPROVED:

SHEET NO. OF SHEETS

BRIDGE NO.

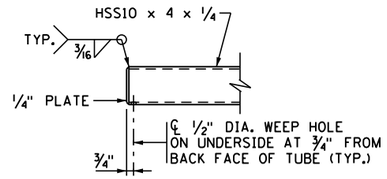

RAIL END DETAIL

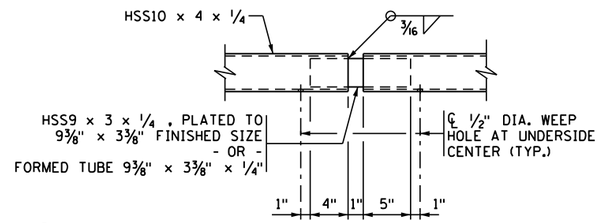

RAIL SLEEVE DETAIL

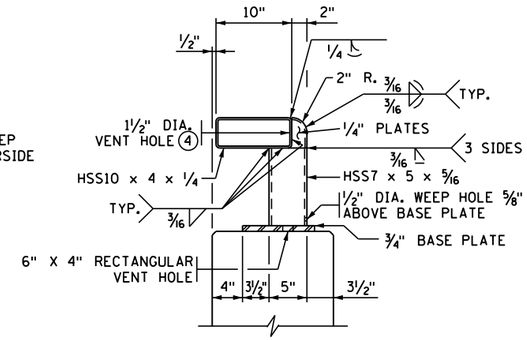

STRUCTURAL TUBE RAIL DETAIL

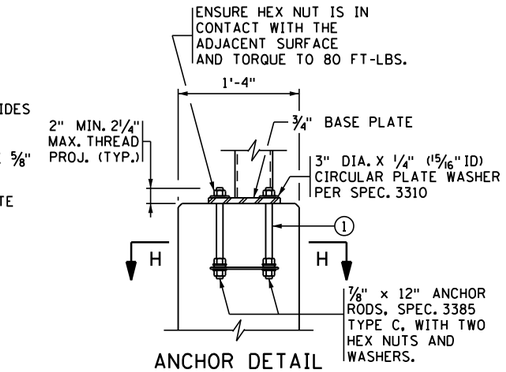

ANCHOR DETAIL

BILL OF REINFORCEMENT FOR PARAPET

BAR	NO.	LENGTH	SHAPE	LOCATION
R501E		6'-2"		PARAPET DOWEL
R502E		6'-4"		PARAPET DOWEL
R503E		6'-4"		PARAPET DOWEL
R504E		5'-9"		PARAPET VERTICAL
R505E		8'-3"		PARAPET VERTICAL
R506E	SER. OF 3	7'-9" TO 8'-1"		PARAPET VERTICAL
R507E		7'-5"		PARAPET VERTICAL
R508E		9'-1"		PARAPET LONGITUDINAL
R509E		2'-8"		PARAPET LONG. IN TAPER
R510E		2'-5"		PARAPET VERTICAL B.F.
R511E		3'-0"		PARAPET VERTICAL F.F.
R512E		3'-10"		VERTICAL @ BASE PLATE
R513E		4'-0"		LONGIT. @ BASE PLATE
R5__E				PARAPET LONGITUDINAL
R5__E				PARAPET LONGITUDINAL
R5__E				PARAPET LONGITUDINAL
R5__E				PARAPET LONGITUDINAL
R5__E				PARAPET LONGITUDINAL

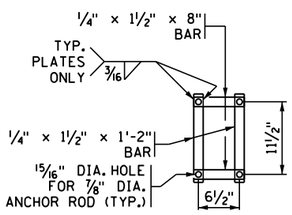

SECTION H-H

(ANCHOR BAR ALTERNATE)

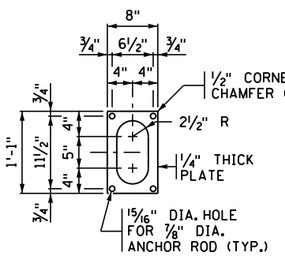

SECTION H-H

(ANCHOR PLATE ALTERNATE)

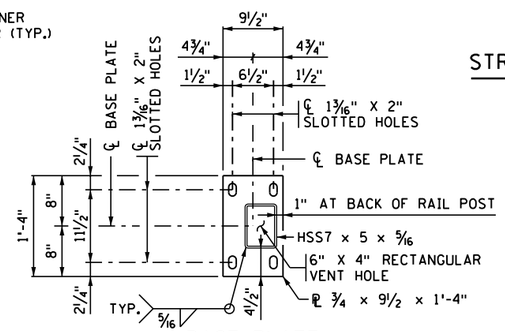

BASE PLATE

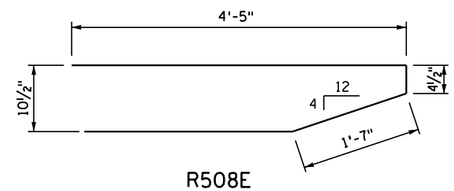

R508E

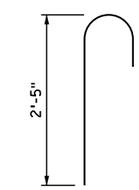

R511E

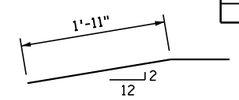

R509E

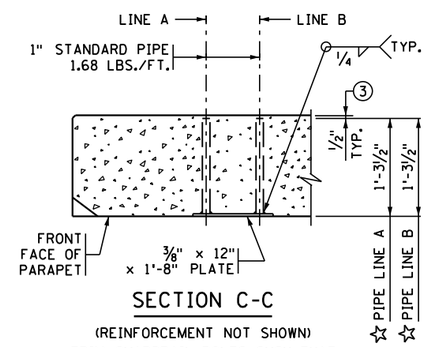

SECTION C-C

(REINFORCEMENT NOT SHOWN)

TRIM GUARDRAIL BOLTS SUCH THAT NO MORE THAN 1½" PROTRUDES FROM BACK FACE OF PARAPET.

☆ DIMENSIONS INCLUDE ⅜" PLATE

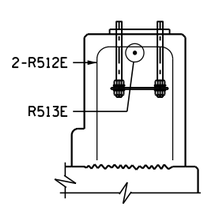

SECTION J-J

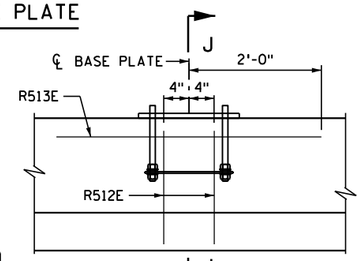

DETAIL "B"

(TYP. AT ALL RAIL POST ANCHORAGES

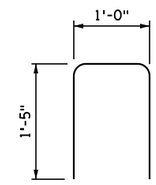

R512E

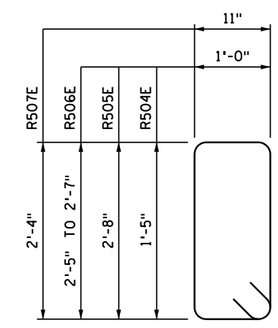

R504E, R505E, R506E, R507E

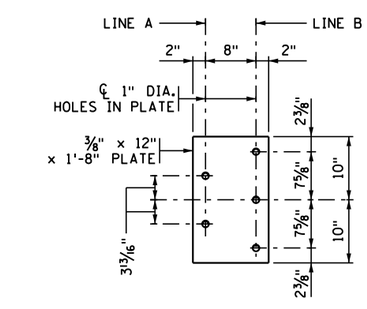

GUARDRAIL CONNECTION DETAIL

GALVANIZE AFTER FABRICATION PER SPEC. 3394
ESTIMATED WEIGHT = 37 LBS.

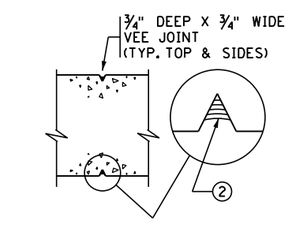

SECTION D-D

CONTROL JOINT DETAIL

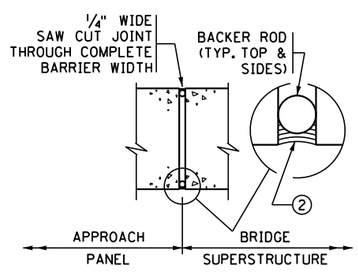

SECTION G-G

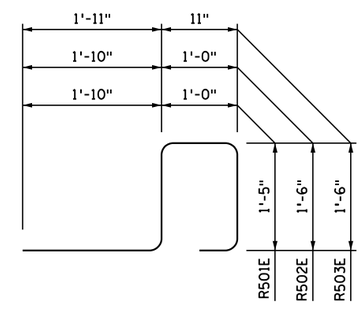

R501E, R502E, R503E

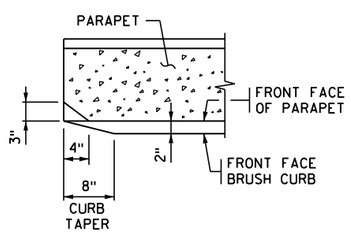

SECTION F-F

GENERAL NOTES

MEASURE PAYMENT LENGTH OF "TYPE P-2 (TL-4) BARRIER CONCRETE (3S52)" BETWEEN THE OUTSIDE ENDS OF THE PARAPET.
CONCRETE PARAPET = 374 LBS./FT. (0.092 CU. YDS./FT.)

MEASURE PAYMENT LENGTH OF "STRUCTURAL TUBE RAILING DESIGN T-1" FROM END TO END OF TUBING. DO NOT DEDUCT FOR JOINTS.

FINISH ALL EDGES OF PARAPET WITH ½" CHAMFER, EXCEPT WHERE OTHERWISE NOTED.

SPACE CONTROL JOINTS AT 10 FT. MAXIMUM. REFER TO SUPERSTRUCTURE SHEET FOR SPECIFIC SPACING INFORMATION.

PROVIDE CORRECT ALIGNMENT FOR ANCHORAGES BY PLACING THEM ACCURATELY AND NORMAL TO GRADE. SEE SPECIAL PROVISIONS.

PROVIDE STRUCTURAL STEEL AND PLATE WASHERS IN ACCORDANCE WITH SPEC. 3310. PROVIDE STRUCTURAL TUBES PER ASTM A500, GRADE B IN ACCORDANCE WITH SPEC. 3361.

INSTALL RAIL POSTS NORMAL TO GRADE.

GALVANIZE BOLTS, NUTS, AND WASHERS IN ACCORDANCE WITH SPEC. 3392.

GALVANIZE ALL OTHER STRUCTURAL STEEL IN ACCORDANCE WITH SPEC. 3394, AFTER FABRICATION.

GUARDRAIL CONNECTION TO BE STRUCTURAL STEEL PER SPEC. 3306.

GUARDRAIL CONNECTION AND NAMEPLATE TO BE CONSIDERED INCIDENTAL.

PRICE BID FOR "STRUCTURAL TUBE RAILING DESIGN T-1" INCLUDES ANCHORAGES AND ALL MATERIAL ABOVE TOP OF CONCRETE PARAPET.

ALL MATERIAL IN THE CONCRETE PARAPET IS LISTED IN SUMMARY OF QUANTITIES FOR SUPERSTRUCTURE.

SEE SPECIAL PROVISIONS FOR COATING TO BE APPLIED TO METAL RAILING.

CONTINUOUSLY GROUND ALL METAL RAILINGS, SEE THE SPECIAL PROVISIONS. REFER TO THE ELECTRICAL PLANS AND ELECTRICAL SPECIAL PROVISIONS FOR DETAILS REGARDING BONDING MULTIPLE ELECTRICAL GROUNDING SYSTEMS.

(1) SUBSTITUTION OF ADHESIVE ANCHORAGE FOR CAST-IN-PLACE ANCHORAGE IS NOT PERMITTED.

(2) JOINT SEALANT PER MnDOT APPROVED/QUALIFIED PRODUCTS LIST - CRACK AND JOINT MATERIALS - SILICONE JOINT SEALERS.

(3) REMOVE CONCRETE FROM PIPE ENDS AFTER FORM REMOVAL.

(4) CENTER HOLE 1¼" FROM TOP OF TUBE.

CODE 51

FIG. 5-397.157(C) (2 OF 2)

REVISED:

APPROVED: APRIL 09, 2020
Kevin Western
STATE BRIDGE ENGINEER

CERTIFIED BY _____ LICENSED PROFESSIONAL ENGINEER _____ DATE
NAME: LIC. NO.

TITLE: STRUCTURAL TUBE RAILING (DESIGN T-1) AND CONCRETE PARAPET (TYPE P-2, TL-4)
INTEGRAL OR SEMI-INTEGRAL ABUTMENT WITH BRIDGE SLAB SIDEWALK AND GUARDRAIL CONNECTION (WITHOUT CONCRETE WEARING COURSE)

DES: DR: CHK: CHK:

APPROVED:

SHEET NO. OF SHEETS

BRIDGE NO.