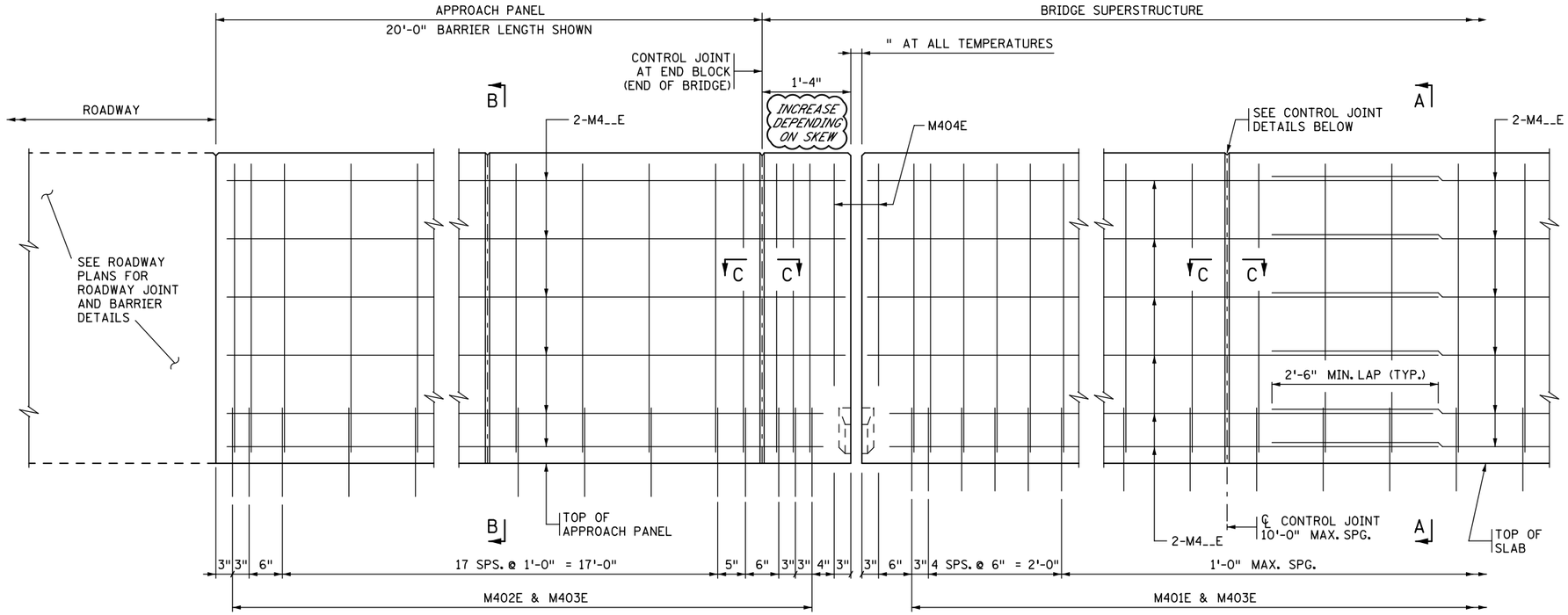

EXPANSION JOINT ③

EXPANSION DEVICE NOT SHOWN

CONTROL JOINT

INSIDE ELEVATION OF BARRIER

CONCRETE WEARING COURSE NOT SHOWN

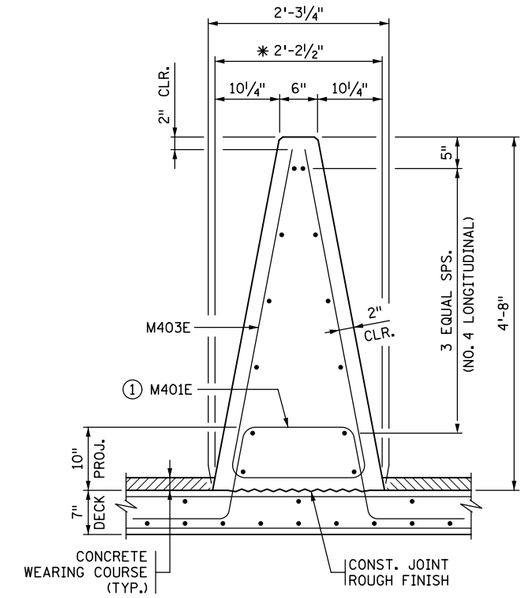

SECTION A-A

✱ DIMENSION SHOWN IS TO THE TOP OF THE WEARING COURSE AT GUTTERLINE.

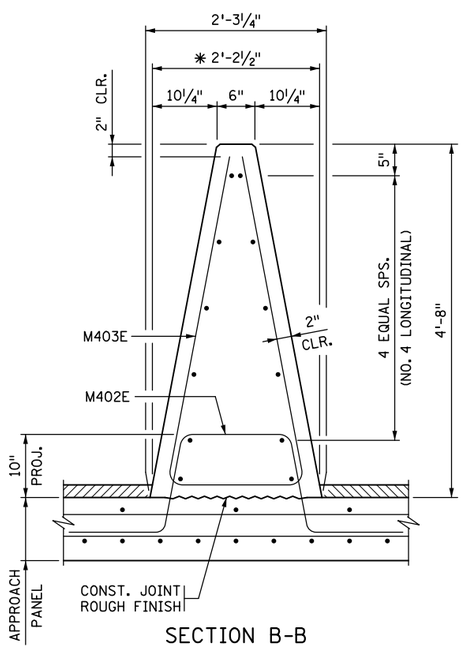

SECTION B-B

CONCRETE APPROACH PANEL.

✱ DIMENSION SHOWN IS TO THE TOP OF THE WEARING COURSE AT GUTTERLINE.

DESIGNER NOTE
(REMOVE PRIOR TO PLOTTING FINAL PLAN):
VERIFY LENGTH OF BARRIER ON APPROACH PANEL WITH ROADWAY DESIGNER. REFER TO MEMO TO DESIGNERS (2016-01) FOR ADDITIONAL REQUIREMENTS REGARDING BARRIER PLACEMENT.

BARRIER MEETS NCHRP 350 TL-4 REQUIREMENTS ON BRIDGE DECK AND TL-3 ON APPROACH PANEL.

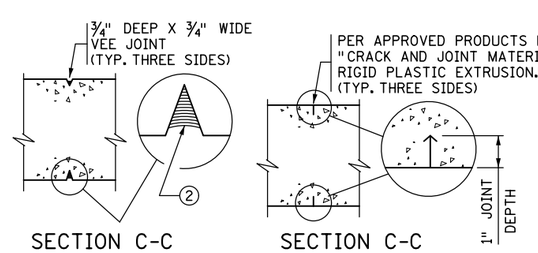

SECTION C-C

CAST-IN-PLACE CONSTRUCTION

SECTION C-C

SLIPFORM CONSTRUCTION

CONTROL JOINT DETAILS

FOR SLIPFORM CONSTRUCTION: IMMEDIATELY AFTER CONCRETE IS PLACED AND WHILE IT IS STILL WET, CREATE A ONE INCH STRAIGHT GROOVE USING A TROWEL. INSERT RIGID PLASTIC EXTRUSION INTO GROOVE TO A DEPTH ⅛" BELOW THE SURFACE; FINISH OVER GROOVE COMPLETELY HIDING THE EXTRUSION.

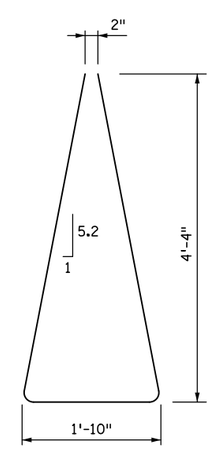

M403E

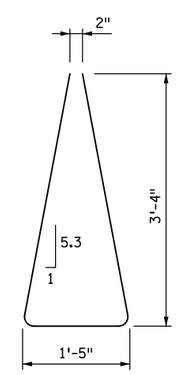

M404E

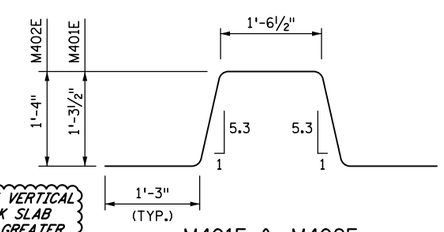

INCREASE M401E VERTICAL LEGS IF DECK SLAB THICKNESS IS GREATER THAN 9".

M401E & M402E

BILL OF REINFORCEMENT FOR BARRIER

BAR	NO.	LENGTH	SHAPE	LOCATION
M401E		6'-8"		BARRIER DOWEL
M402E		6'-9"		BARRIER DOWEL
M403E		10'-6"		BARRIER VERTICAL
M404E		8'-2"		BARRIER VERTICAL
M4__E				BARRIER LONGITUDINAL
M4__E				BARRIER LONGITUDINAL
M4__E				BARRIER LONGITUDINAL
M4__E				BARRIER LONGITUDINAL

GENERAL NOTES

MEASURE PAYMENT LENGTH BETWEEN THE OUTSIDE ENDS OF THE BARRIER FROM THE E8 JOINT.

CONCRETE BARRIER = 970 LBS./FT. (0.240 CU. YDS/FT.)

FINISH ALL EDGES OF BARRIER WITH ½" CHAMFER EXCEPT WHERE OTHERWISE NOTED.

SPACE CONTROL JOINTS AT 10 FT. MAXIMUM. REFER TO SUPERSTRUCTURE SHEET FOR SPECIFIC SPACING INFORMATION.

BARRIER QUANTITIES ARE LISTED IN SUMMARY OF QUANTITIES FOR SUPERSTRUCTURE.

① PLACE BAR ON TOP OF BOTTOM REINFORCEMENT MAT IN DECK.

② JOINT SEALANT PER MnDOT APPROVED/QUALIFIED PRODUCTS LIST - CRACK AND JOINT MATERIALS - SILICONE JOINT SEALERS.

③ REFER TO "WATERPROOF EXPANSION DEVICE" STANDARD PLANS FOR COVER PLATE DETAILS.

REVISION: MAY 10, 2017

APPROVED: AUGUST 24, 2016

Kevin Western

STATE BRIDGE ENGINEER

CERTIFIED BY _____ LICENSED PROFESSIONAL ENGINEER _____ DATE

NAME: LIC. NO.

TITLE: SOLID MEDIAN BARRIER 54" (TYPE S, TL-4) PARAPET ABUTMENT (WITH 2" CONCRETE WEARING COURSE)

DES: DR: CHK: CHK:

SHEET NO. OF SHEETS

APPROVED:

FIG. 5-397.149(D)

BRIDGE NO.