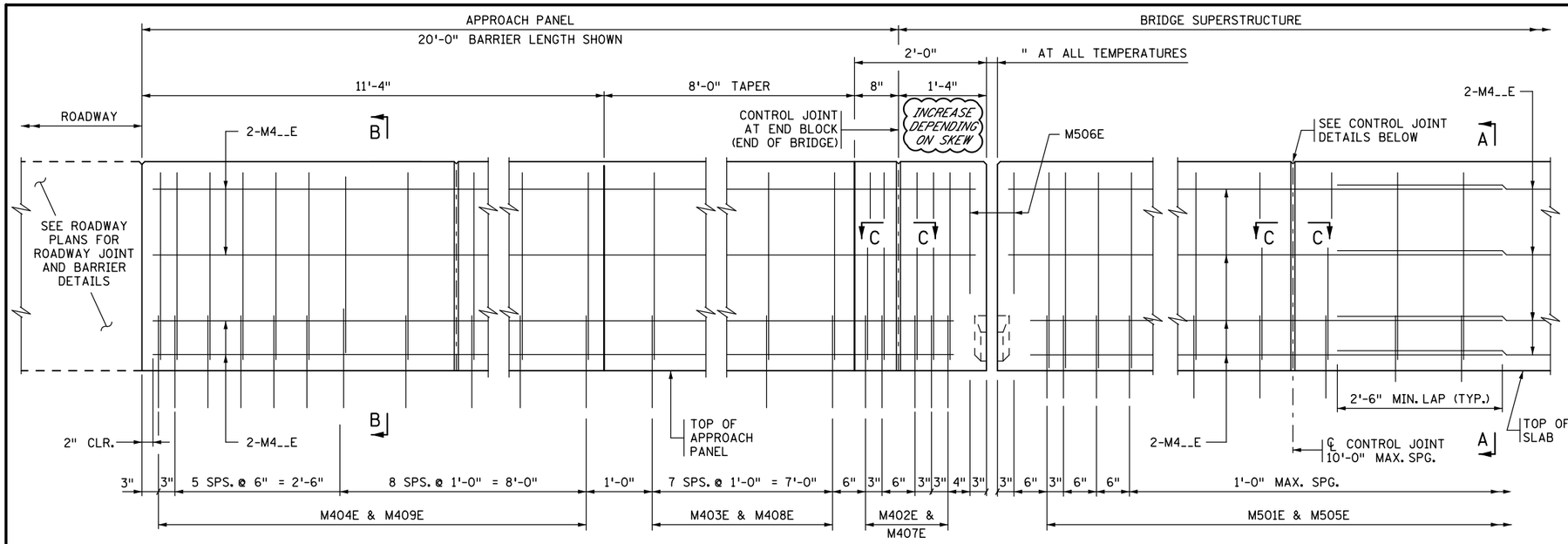

EXPANSION JOINT ④ CONTROL JOINT

EXPANSION DEVICE NOT SHOWN

INSIDE ELEVATION OF BARRIER

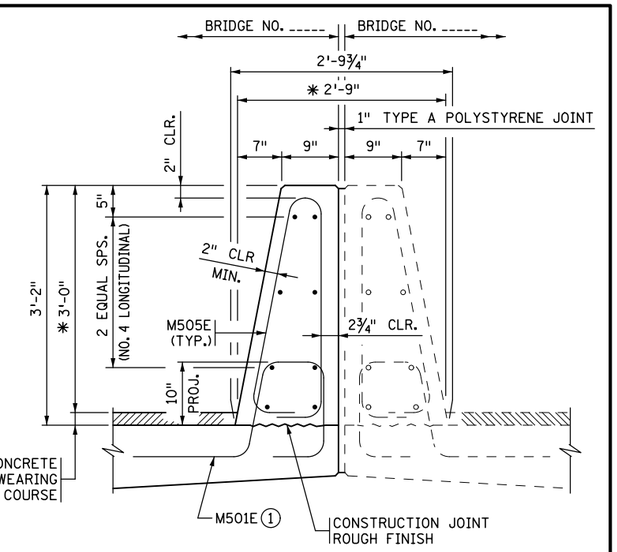

SECTION A-A

✱ DIMENSION SHOWN IS TO THE TOP OF THE WEARING COURSE AT GUTTERLINE.

DESIGNER NOTE
(REMOVE PRIOR TO PLOTTING FINAL PLAN):
VERIFY LENGTH OF BARRIER ON APPROACH PANEL WITH ROADWAY DESIGNER. REFER TO MEMO TO DESIGNERS (2016-01) FOR ADDITIONAL REQUIREMENTS REGARDING BARRIER PLACEMENT.

DESIGNER NOTE
(REMOVE PRIOR TO PLOTTING FINAL PLAN):
AVOID LAYOUTS WITH HORIZONTAL GAP BETWEEN SPLIT MEDIAN BARRIERS OF 2" TO 6", AS BARRIERS CANNOT BE SLIPFORMED. IF GAP EXCEEDS 6" CONSIDER USING STANDARD FIGURE 5-397-138 OR .139 IN LIEU OF THIS STANDARD.

BARRIER ON EACH SIDE MEETS NCHRP 350 TL-4 REQUIREMENTS ON BRIDGE DECK AND TL-3 ON APPROACH PANEL.

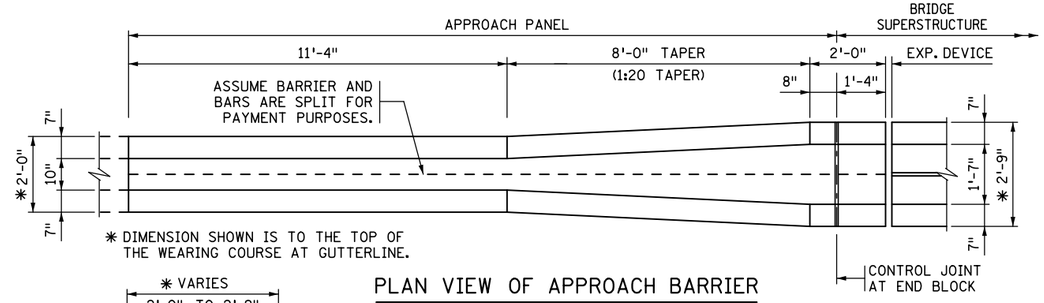

✱ DIMENSION SHOWN IS TO THE TOP OF THE WEARING COURSE AT GUTTERLINE.

PLAN VIEW OF APPROACH BARRIER

INCREASE M501E VERTICAL LEGS IF DECK SLAB THICKNESS IS GREATER THAN 9".

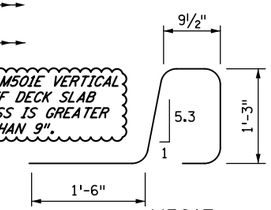

M501E

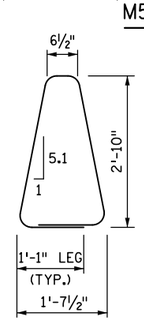

M409E

BILL OF REINFORCEMENT FOR BARRIER				
BAR	NO.	LENGTH	SHAPE	LOCATION
M501E		5'-4"		BARRIER DOWEL
M402E		7'-4"		BARRIER DOWEL
M403E	SER. OF 8	6'-7" TO 7'-3"		BARRIER DOWEL
M404E		6'-7"		BARRIER DOWEL
M505E		7'-3"		BARRIER VERTICAL
M506E		5'-3"		BARRIER VERTICAL
M407E		9'-9"		BARRIER VERTICAL
M408E	SER. OF 8	9'-1" TO 9'-9"		BARRIER VERTICAL
M409E		8'-5"		BARRIER VERTICAL
M4__E				BARRIER LONGIT.
M4__E				BARRIER LONGIT.
M4__E				BARRIER LONGIT.
M4__E				BARRIER LONGIT.
M4__E				BARRIER LONGIT.

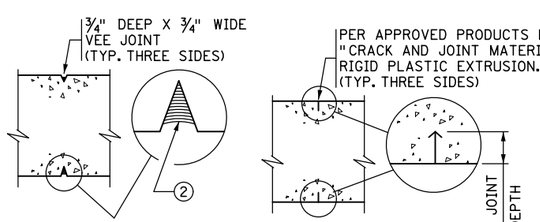

SECTION C-C — CAST-IN-PLACE CONSTRUCTION

SECTION C-C — SLIPFORM CONSTRUCTION

CONTROL JOINT DETAILS

FOR SLIPFORM CONSTRUCTION: IMMEDIATELY AFTER CONCRETE IS PLACED AND WHILE IT IS STILL WET, CREATE A ONE INCH STRAIGHT GROOVE USING A TROWEL. INSERT RIGID PLASTIC EXTRUSION INTO GROOVE TO A DEPTH ⅛" BELOW THE SURFACE; FINISH OVER GROOVE COMPLETELY HIDING THE EXTRUSION.

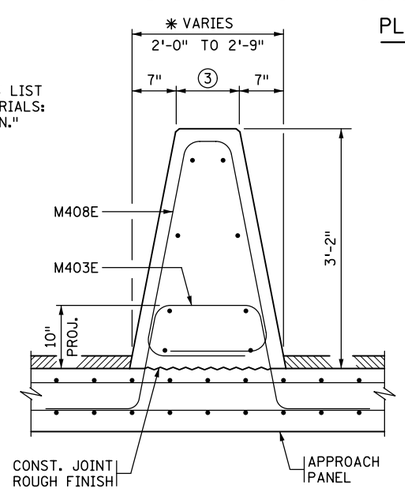

SECTION B-B

CONCRETE APPROACH ROADWAY.
✱ DIMENSION SHOWN IS TO THE TOP OF THE WEARING COURSE AT GUTTERLINE.

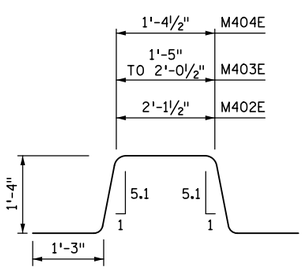

M402E, M403E, M404E

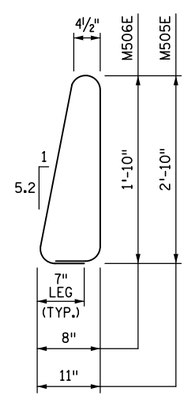

M505E, M506E

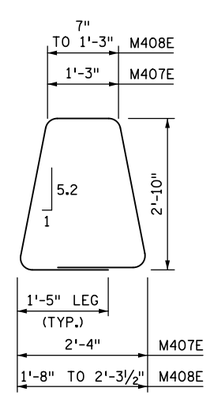

M407E, M408E

GENERAL NOTES

MEASURE PAYMENT LENGTH BETWEEN THE OUTSIDE ENDS OF THE BARRIER FROM THE E8 JOINT. MEASURED LENGTH IS FOR ONE SIDE OF THE SPLIT MEDIAN BARRIER.

CONCRETE BARRIER = 503 LBS./FT. (0.124 CU. YDS./FT.) PER SIDE.

FINISH ALL EDGES OF BARRIER WITH ½" CHAMFER, EXCEPT WHERE OTHERWISE NOTED.

SPACE CONTROL JOINTS AT 10 FT. MAXIMUM. REFER TO SUPERSTRUCTURE SHEET FOR SPECIFIC SPACING INFORMATION..

BARRIER QUANTITIES ARE LISTED IN SUMMARY OF QUANTITIES FOR SUPERSTRUCTURE.

① PLACE BAR ON TOP OF BOTTOM REINFORCEMENT MAT IN DECK.

② JOINT SEALANT PER MnDOT APPROVED/QUALIFIED PRODUCTS LIST - CRACK AND JOINT MATERIALS - SILICONE JOINT SEALERS.

③ VARIES FROM 10" TO 1'-7".

④ REFER TO "WATERPROOF EXPANSION DEVICE" STANDARD PLANS FOR COVER PLATE DETAILS.

REVISION: MAY 10, 2017

APPROVED: AUGUST 24, 2016

Kevin Western
STATE BRIDGE ENGINEER

CERTIFIED BY _____ LICENSED PROFESSIONAL ENGINEER _____ DATE

NAME: LIC. NO.

TITLE: SPLIT MEDIAN BARRIER 36" (TYPE S, TL-4)
PARAPET ABUTMENT
(WITH 2" CONCRETE WEARING COURSE)

DES: DR: CHK: CHK:

SHEET NO. OF SHEETS

FIG. 5-397.144(D)

APPROVED:

BRIDGE NO.