MANUAL

5-397

MINNESOTA DEPARTMENT OF TRANSPORTATION

Bridge Office

Bridge Details Manual Part II

MnDOT BRIDGE OFFICE

Bridge Details Manual Part II

Standard Figures

Minnesota Department of Transportation
3485 Hadley Avenue North • Mail Stop 610
Oakdale, MN 55128-3307
Phone: 651/366-4500 Fax: 651/366-4497

Last Date Revised: April 09, 2020

FIGURE N0.	DESCRIPTION	DATE APPROVED	DATE REVISED
5-397.114	Concrete Barrier (Type F, TL-4) With Separate End Post (Without Concrete Wearing Course)	Nov. 06, 2013	11-03-2015
5-397.115(A)	Concrete Barrier (Type F, TL-4) Integral or Semi-Integral Abutment With Integral End Post (Without Concrete Wearing Course)	Jan. 13, 2015	
5-397.115(B)	Concrete Barrier (Type F, TL-4) Parapet Abutment With Integral End Post (Without Concrete Wearing Course)	Jan. 13, 2015	
5-397.115(C)	Concrete Barrier (Type F, TL-4) Integral or Semi-Integral Abutment With Integral End Post (Without Concrete Wearing Course) No approach panel	Jan. 13, 2015	
5-397.116	Concrete Barrier (Type F, TL-4) With Separate End Post (With Concrete Wearing Course)	Nov. 06, 2013	11-03-2015
5-397.117(A)	Concrete Barrier (Type F, TL-4) Integral or Semi-Integral Abutment With Integral End Post (With Concrete Wearing Course)	Jan. 13, 2015	11-03-2015
5-397.117(B)	Concrete Barrier (Type F, TL-4) Parapet Abutment With Integral End Post (With Concrete Wearing Course)	Jan. 13, 2015	
5-397.119	Wire Fence (Design W-1) And Concrete Parapet (Type P-1)	Jan. 05, 2017	02-22-2018
5-397.122	Concrete Barrier (Type F, TL-5) With Integral End Post (With Conc. Wearing Course)	July 25, 2005	05-26-2006
5-397.124	Concrete Barrier (Type F, TL-5) With Integral End Post (Without Conc. Wearing Course)	July 25, 2005	05-26-2006
5-397.125	Concrete Barrier (Type F, TL-5) With Bridge Slab Sidewalk And Integral End Post (With Conc. Wearing Course)	July 25, 2005	05-26-2006
5-397.126	Concrete Barrier (Type F, TL-5) With Bridge Slab Sidewalk And Integral End Post (Without Conc. Wearing Course)	July 25, 2005	05-26-2006
5-397.128	Concrete Barrier (Type F, TL-5) With Glare Screen and Integral End Post (With Conc. Wearing Course)	June 14, 2006	
5-397.129	Concrete Barrier (Type F, TL-5) With Bikeway and Integral End Post (With Conc. Wearing Course)	June 14, 2006	
5-397.130	Solid Median Barrier Type F (With Wearing Course)	Dec. 18, 2003	04-17-2013
5-397.131	Split Median Barrier Type F (With Wearing Course)	Oct. 29, 2004	04-17-2013

* Refer to http://www.dot.state.mn.us/bridge/ for current Bridge CADD Standards

FIGURE N0.	DESCRIPTION	DATE APPROVED	DATE REVISED
5-397.132	Solid Median Barrier And Glare Screen Type F (With Concrete Wearing Course)	Dec. 18, 2003	04-17-2013
5-397.135	Split Median Barrier And Glare Screen Type F (Without Concrete Wearing Course)	Apr. 22, 2004	04-17-2013
5-397.136	Split Median Barrier And Glare Screen Type F (With Concrete Wearing Course)	Apr. 22, 2004	04-17-2013
5-397.137	Offset Split Median Barrier And Glare Screen Type F (With Concrete Wearing Course)	Apr. 22, 2004	04-17-2013
5-397.138(A)	Concrete Barrier 36" (Type S, TL-4) (Integral or Semi-Integral Abutment with Guardrail Connection) (Without Concrete Wearing Course)	Aug. 24, 2016	05-10-2017
5-397.138(B)	Concrete Barrier 36" (Type S, TL-4) (Integral or Semi-Integral Abutment with Guardrail Connection) (With 2" Concrete Wearing Course)	Aug. 24, 2016	05-10-2017
5-397.138(C)	Concrete Barrier 36" (Type S, TL-4) (Integral or Semi-Integral Abutment with Bridge Slab Sidewalk and Guardrail Connection) (Without Concrete Wearing Course)	Aug. 24, 2016	05-10-2017
5-397.138(D)	Concrete Barrier 36" (Type S, TL-4) (Integral or Semi-Integral Abutment with Bridge Slab Sidewalk and Guardrail Connection) (With 2" Concrete Wearing Course)	Aug. 24, 2016	05-10-2017
5-397.138(E)	Concrete Barrier 36" (Type S, TL-4) (Integral or Semi-Integral Abutment) (Without Concrete Wearing Course) No Approach Panel	May 10, 2017	
5-397.139(A)	Concrete Barrier 36" (Type S, TL-4) (Parapet Abutment with Guardrail Connection) (Without Concrete Wearing Course)	Aug. 24, 2016	05-10-2017
5-397.139(B)	Concrete Barrier 36" (Type S, TL-4) (Parapet Abutment with Guardrail Connection) (With 2" Concrete Wearing Course)	Aug. 24, 2016	05-10-2017
5-397.139(C)	Concrete Barrier 36" (Type S, TL-4) (Parapet Abutment with Bridge Slab Sidewalk and Guardrail Connection) (Without Concrete Wearing Course)	Aug. 24, 2016	05-10-2017

FIGURE N0.	DESCRIPTION	DATE APPROVED	DATE REVISED
5-397.139(D)	Concrete Barrier 36" (Type S, TL-4) (Parapet Abutment with Bridge Slab Sidewalk and Guardrail Connection) (With 2" Concrete Wearing Course)	Aug. 24, 2016	05-10-2017
5-397.140(A)	Concrete Barrier 42" (Type S, TL-4) (Integral or Semi-Integral Abutment with Guardrail Connection) (Without Concrete Wearing Course)	Aug. 24, 2016	05-10-2017
5-397.140(B)	Concrete Barrier 42" (Type S, TL-4) (Integral or Semi-Integral Abutment with Guardrail Connection) (With 2" Concrete Wearing Course)	Aug. 24, 2016	05-10-2017
5-397.140(C)	Concrete Barrier 42" (Type S, TL-4) (Integral or Semi-Integral Abutment with Bridge Slab Sidewalk and Guardrail Connection) (Without Concrete Wearing Course)	Aug. 24, 2016	05-10-2017
5-397.140(D)	Concrete Barrier 42" (Type S, TL-4) (Integral or Semi-Integral Abutment with Bridge Slab Sidewalk and Guardrail Connection) (With 2" Concrete Wearing Course)	Aug. 24, 2016	05-10-2017
5-397.141(A)	Concrete Barrier 42" (Type S, TL-4) (Parapet Abutment with Guardrail Connection) (Without Concrete Wearing Course)	Aug. 24, 2016	05-10-2017
5-397.141(B)	Concrete Barrier 42" (Type S, TL-4) (Parapet Abutment with Guardrail Connection) (With 2" Concrete Wearing Course)	Aug. 24, 2016	05-10-2017
5-397.141(C)	Concrete Barrier 42" (Type S, TL-4) (Parapet Abutment with Bridge Slab Sidewalk and Guardrail Connection) (Without Concrete Wearing Course)	Aug. 24, 2016	05-10-2017
5-397.141(D)	Concrete Barrier 42" (Type S, TL-4) (Parapet Abutment with Bridge Slab Sidewalk and Guardrail Connection) (With 2" Concrete Wearing Course)	Aug. 24, 2016	05-10-2017

FIGURE N0.	DESCRIPTION	DATE APPROVED	DATE REVISED
5-397.142(A)	Concrete Barrier 54" (Type S, TL-4) (Integral or Semi-Integral Abutment with Guardrail Connection) (Without Concrete Wearing Course)	Aug. 24, 2016	05-10-2017
5-397.142(B)	Concrete Barrier 54" (Type S, TL-4) (Integral or Semi-Integral Abutment with Guardrail Connection) (With 2" Concrete Wearing Course)	Aug. 24, 2016	05-10-2017
5-397.142(C)	Concrete Barrier 54" (Type S, TL-4) (Integral or Semi-Integral Abutment with Bridge Slab Sidewalk and Guardrail Connection) (Without Concrete Wearing Course)	Aug. 24, 2016	05-10-2017
5-397.142(D)	Concrete Barrier 54" (Type S, TL-4) (Integral or Semi-Integral Abutment with Bridge Slab Sidewalk and Guardrail Connection) (With 2" Concrete Wearing Course)	Aug. 24, 2016	05-10-2017
5-397.143(A)	Concrete Barrier 54" (Type S, TL-4) (Parapet Abutment with Guardrail Connection) (Without Concrete Wearing Course)	Aug. 24, 2016	05-10-2017
5-397.143(B)	Concrete Barrier 54" (Type S, TL-4) (Parapet Abutment with Guardrail Connection) (With 2" Concrete Wearing Course)	Aug. 24, 2016	05-10-2017
5-397.143(C)	Concrete Barrier 54" (Type S, TL-4) (Parapet Abutment with Bridge Slab Sidewalk and Guardrail Connection) (Without Concrete Wearing Course)	Aug. 24, 2016	05-10-2017
5-397.143(D)	Concrete Barrier 54" (Type S, TL-4) (Parapet Abutment with Bridge Slab Sidewalk and Guardrail Connection) (With 2" Concrete Wearing Course)	Aug. 24, 2016	05-10-2017
5-397.144(A)	Split Median Barrier 36" (Type S, TL-4) (Integral or Semi-Integral Abutment) (Without Concrete Wearing Course)	Aug. 24, 2016	05-10-2017
5-397.144(B)	Split Median Barrier 36" (Type S, TL-4) (Integral or Semi-Integral Abutment) (With 2" Concrete Wearing Course)	Aug. 24, 2016	05-10-2017

FIGURE N0.	DESCRIPTION	DATE APPROVED	DATE REVISED
5-397.144(C)	Split Median Barrier 36" (Type S, TL-4) (Parapet Abutment) (Without Concrete Wearing Course)	Aug. 24, 2016	05-10-2017
5-397.144(D)	Split Median Barrier 36" (Type S, TL-4) (Parapet Abutment) (With 2" Concrete Wearing Course)	Aug. 24, 2016	05-10-2017
5-397.145(A)	Split Median Barrier 42" (Type S, TL-4) (Integral or Semi-Integral Abutment) (Without Concrete Wearing Course)	Aug. 24, 2016	05-10-2017
5-397.145(B)	Split Median Barrier 42" (Type S, TL-4) (Integral or Semi-Integral Abutment) (With 2" Concrete Wearing Course)	Aug. 24, 2016	05-10-2017
5-397.145(C)	Split Median Barrier 42" (Type S, TL-4) (Parapet Abutment) (Without Concrete Wearing Course)	Aug. 24, 2016	05-10-2017
5-397.145(D)	Split Median Barrier 42" (Type S, TL-4) (Parapet Abutment) (With 2" Concrete Wearing Course)	Aug. 24, 2016	05-10-2017
5-397.146(A)	Split Median Barrier 54" (Type S, TL-4) (Integral or Semi-Integral Abutment) (Without Concrete Wearing Course)	Aug. 24, 2016	05-10-2017
5-397.146(B)	Split Median Barrier 54" (Type S, TL-4) (Integral or Semi-Integral Abutment) (With 2" Concrete Wearing Course)	Aug. 24, 2016	05-10-2017
5-397.146(C)	Split Median Barrier 54" (Type S, TL-4) (Parapet Abutment) (Without Concrete Wearing Course)	Aug. 24, 2016	05-10-2017
5-397.146(D)	Split Median Barrier 54" (Type S, TL-4) (Parapet Abutment) (With 2" Concrete Wearing Course)	Aug. 24, 2016	05-10-2017
5-397.147(A)	Solid Median Barrier 36" (Type S, TL-4) (Integral or Semi-Integral Abutment) (Without Concrete Wearing Course)	Aug. 24, 2016	05-10-2017

FIGURE N0.	DESCRIPTION	DATE APPROVED	DATE REVISED
5-397.147(B)	Solid Median Barrier 36" (Type S, TL-4) (Integral or Semi-Integral Abutment) (With 2" Concrete Wearing Course)	Aug. 24, 2016	05-10-2017
5-397.147(C)	Solid Median Barrier 36" (Type S, TL-4) (Parapet Abutment) (Without Concrete Wearing Course)	Aug. 24, 2016	05-10-2017
5-397.147(D)	Solid Median Barrier 36" (Type S, TL-4) (Parapet Abutment) (With 2" Concrete Wearing Course)	Aug. 24, 2016	05-10-2017
5-397.148(A)	Solid Median Barrier 42" (Type S, TL-4) (Integral or Semi-Integral Abutment) (Without Concrete Wearing Course)	Aug. 24, 2016	05-10-2017
5-397.148(B)	Solid Median Barrier 42" (Type S, TL-4) (Integral or Semi-Integral Abutment) (With 2" Concrete Wearing Course)	Aug. 24, 2016	05-10-2017
5-397.148(C)	Solid Median Barrier 42" (Type S, TL-4) (Parapet Abutment) (Without Concrete Wearing Course)	Aug. 24, 2016	05-10-2017
5-397.148(D)	Solid Median Barrier 42" (Type S, TL-4) (Parapet Abutment) (With 2" Concrete Wearing Course)	Aug. 24, 2016	05-10-2017
5-397.149(A)	Solid Median Barrier 54" (Type S, TL-4) (Integral or Semi-Integral Abutment) (Without Concrete Wearing Course)	Aug. 24, 2016	05-10-2017
5-397.149(B)	Solid Median Barrier 54" (Type S, TL-4) (Integral or Semi-Integral Abutment) (With 2" Concrete Wearing Course)	Aug. 24, 2016	05-10-2017
5-397.149(C)	Solid Median Barrier 54" (Type S, TL-4) (Parapet Abutment) (Without Concrete Wearing Course)	Aug. 24, 2016	05-10-2017
5-397.149(D)	Solid Median Barrier 54" (Type S, TL-4) (Parapet Abutment) (With 2" Concrete Wearing Course)	Aug. 24, 2016	05-10-2017

FIGURE N0.	DESCRIPTION	DATE APPROVED	DATE REVISED
5-397.154	Metal Railing (Type M-1) For Bikeways And Concrete Parapet (Type P-1) (With Integral End Post)	Dec. 02, 2015	02-27-2019
5-397.157(A) (2 Sheets)	Structural Tube Railing (Design T-1) and Concrete Parapet (Type P-2, TL-4) Integral or Semi-Integral Abutment with Guardrail Connection (Without Concrete Wearing Course)	Apr. 09, 2020	
5-397.157(B) (2 sheets)	Structural Tube Railing (Design T-1) and Concrete Parapet (Type P-2, TL-4) Integral or Semi-Integral Abutment with Guardrail Connection (With 2” Concrete Wearing Course)	Apr. 09, 2020	
5-397.157(C) (2 Sheets)	Structural Tube Railing (Design T-1) and Concrete Parapet (Type P-2, TL-4) Integral or Semi-Integral Abutment with Bridge Slab Sidewalk and Guardrail Connection (Without Concrete Wearing Course)	Apr. 09, 2020	
5-397.157(D) (2 Sheets)	Structural Tube Railing (Design T-1) and Concrete Parapet (Type P-2, TL-4) Integral or Semi-Integral Abutment with Bridge Slab Sidewalk and Guardrail Connection (With 2” Concrete Wearing Course)	Apr. 09, 2020	
5-397.157(E) (2 Sheets)	Structural Tube Railing (Design T-1) and Concrete Parapet (Type P-2, TL-4) Parapet Abutment with Guardrail Connection (Without Concrete Wearing Course)	Apr. 09, 2020	
5-397.157(F) (2 Sheets)	Structural Tube Railing (Design T-1) and Concrete Parapet (Type P-2, TL-4) Parapet Abutment with Guardrail Connection (With 2” Concrete Wearing Course)	Apr. 09, 2020	
5-397.157(G) (2 Sheets)	Structural Tube Railing (Design T-1) and Concrete Parapet (Type P-2, TL-4) Parapet Abutment with Bridge Slab Sidewalk and Guardrail Connection (Without Concrete Wearing Course)	Apr. 09, 2020	
5-397.157(H) (2 Sheets)	Structural Tube Railing (Design T-1) and Concrete Parapet (Type P-2, TL-4) Parapet Abutment with Bridge Slab Sidewalk and Guardrail Connection (With 2” Concrete Wearing Course)	Apr. 09, 2020	
5-397.158(A)	Structural Tube Railing (Design T-2) for Concrete J or F Barrier	Dec. 02, 2015	02-27-2019

FIGURE N0.	DESCRIPTION	DATE APPROVED	DATE REVISED
5-397.158(B)	Structural Tube Railing (Design T-2) for 36" Concrete S Barriers	Feb. 22, 2018	02-27-2019
5-397.160	Ornamental Metal Railing With Fence (Design T-3 Parapet Mount)	Nov. 06, 2013	10-22-2019
5-397.161	Ornamental Metal Railing With Fence (Design T-3 Curb Mount)	Nov. 06, 2013	10-22-2019
5-397.162	Ornamental Metal Railing (Design T-4 Parapet Mount)	Nov. 06, 2013	10-22-2019
5-397.163	Ornamental Metal Railing (Design T-4 Curb Mount)	Nov. 06, 2013	10-22-2019
5-397.164	Ornamental Metal Railing (Design T-5 Parapet Mount)	Feb. 22, 2018	10-22-2019
5-397.165	Ornamental Metal Railing (Design T-5 Curb Mount)	Feb. 22, 2018	10-22-2019
5-397.166(A)	Concrete Parapet (Type P-1, TL-2) Integral or Semi-Integral Abutment (Without Concrete Wearing Course) With Raised Sidewalk	Apr. 09, 2020	
5-397.166(B)	Concrete Parapet (Type P-1, TL-2) Integral or Semi-Integral Abutment (Without Concrete Wearing Course)	Apr. 09, 2020	
5-397.166(C)	Concrete Parapet (Type P-1, TL-2) Integral or Semi-Integral Abutment (With 2" Concrete Wearing Course) With Raised Sidewalk	Apr. 09, 2020	
5-397.166(D)	Concrete Parapet (Type P-1, TL-2) Integral or Semi-Integral Abutment (With 2" Concrete Wearing Course)	Apr. 09, 2020	
5-397.166(E)	Concrete Parapet (Type P-1, TL-2) Parapet Abutment (Without Concrete Wearing Course) with Raised Sidewalk	Apr. 09, 2020	
5-397.166(F)	Concrete Parapet (Type P-1, TL-2) Parapet Abutment (Without Concrete Wearing Course)	Apr. 09, 2020	
5-397.166(G)	Concrete Parapet (Type P-1, TL-2) Parapet Abutment (With 2" Concrete Wearing Course) with Raised Sidewalk	Apr. 09, 2020	
5-397.166(H)	Concrete Parapet (Type P-1, TL-2) Parapet Abutment (With 2" Concrete Wearing Course)	Apr. 09, 2020	
5-397.167	Concrete Curb For Use With Ornamental Railing	Nov. 06, 2013	

FIGURE N0.	DESCRIPTION	DATE APPROVED	DATE REVISED
5-397.173(A)	Concrete Parapet (Type P-4, TL-4) Integral or Semi-Integral Abutment (Without Conc. Wearing Course)	Apr. 09, 2020	
5-397.173(B)	Concrete Parapet (Type P-4, TL-4) Integral or Semi-Integral Abutment (With 2” Conc. Wearing Course)	Apr. 09, 2020	
5-397.173(C)	Concrete Parapet (Type P-4, TL-4) Parapet Abutment (Without Conc. Wearing Course)	Apr. 09, 2020	
5-397.173(D)	Concrete Parapet (Type P-4, TL-4) Parapet Abutment (With 2” Conc. Wearing Course)	Apr. 09, 2020	
5-397.202	5 Ft. Wire Fence (Design W-1) For Pedestrian Bridges	Jan. 05, 2017	
5-397.205	8 Ft. Wire Fence For Pedestrian Walks	Jan. 05, 2017	
5-397.300	Grouted Injected Fabric Formed Slope Paving	Jan. 05, 2017	
5-397.301	Concrete Slope Paving Under Bridges	Sept. 26, 2003	11-08-2018
5-397.302	Stabilized Aggregate Slope Paving Under Bridges	Sept. 26, 2003	09-11-2014
5-397.309	Riprap Slope With Geotextile Filter (Slopes 1:2 And Flatter)	May 24, 2011	01-05-2017
5-397.402	Conduit System For_____	Sept. 26, 2003	05-24-2012
5-397.406(A)	Conduit System (Lighting) Type F Concrete Barrier Blister, With or Without Wearing Course	Aug. 24, 2016	
5-397.406(B)	Conduit System (Lighting) Type S Concrete Barrier Blister, With or Without Wearing Course	Aug. 24, 2016	
5-397-501	30MH Prestressed Concrete Beam (Pretensioned) 30MH-___	Dec. 20, 2018	10-22-2019
5-397-502	35MH Prestressed Concrete Beam (Pretensioned) 35MH-___	Dec. 20, 2018	10-22-2019
5-397-503	40MH Prestressed Concrete Beam (Pretensioned) 40MH-___	Dec. 20, 2018	10-22-2019
5-397.504	27" Prestressed Concrete Beam (Pretensioned) 27M-___	Jan. 13, 2015	10-22-2019
5-397.505	36" Prestressed Concrete Beam (Pretensioned) 36M-___	Jan. 13, 2015	10-22-2019
5-397.507	MN45" Prestressed Concrete Beam (Pretensioned) MN45___	Jan. 13, 2015	10-22-2019
5-397.508	MN54" Prestressed Concrete Beam (Pretensioned) MN54-__	Jan. 13, 2015	10-22-2019
5-397.509	MN63" Prestressed Concrete Beam (Pretensioned) MN63-__	Jan. 13, 2015	10-22-2019
5-397.531	82MW Prestressed Concrete Beam (Pretensioned) 82MW___	Jan. 13, 2015	06-12-2019
5-397.532	96MW Prestressed Concrete Beam (Pretensioned) 96MW___	Jan. 13, 2015	06-12-2019
5-397.550	14", 18" & 22" Rectangular Prestressed Concrete Beam (Pretensioned) __" RB-___	Jan. 13, 2015	10-22-2019
5-397.627(A)	Waterproof Expansion Device (With Type F Barrier)	Aug. 24, 2016	02-22-2018
5-397.627(B)	Waterproof Expansion Device (With Type S Barrier)	Aug. 24, 2016	02-22-2018

FIGURE N0.	DESCRIPTION	DATE APPROVED	DATE REVISED
5-397.628	Waterproof Expansion Device Snow Plow Protection (Use On Skews Over 15° And Less Than 50°)	Sept. 26, 2003	11-06-2013
5-397.630(A)	Waterproof Expansion Device (With Raised Median or Sidewalk with F Barrier and Parapet)	Aug. 24, 2016	10-22-2019
5-397.630(B)	Waterproof Expansion Device (With Raised Median or Sidewalk with S Barrier and Parapet)	Aug. 24, 2016	10-22-2019
5-397.632(A)	Waterproof Expansion Device (Raised Median or Integral Sidewalk with F Barrier and Curb)	Aug. 24, 2016	10-22-2019
5-397.632(B)	Waterproof Expansion Device (Raised Median or Integral Sidewalk with S Barrier and Curb)	Aug. 24, 2016	10-22-2019
5-397.900	As-Built Bridge Data	May 10, 2017	10-22-2019

DESIGN AIDS (Not a Standard)

Mpls.dgn	Ornamental Metal Railing (Type M-2) And Concrete Railing (Type P-3)	04-23-2003

FIGURE N0.	DESCRIPTION	DATE APPROVED	DATE REVISED
5-397.108	Ornamental Metal Railing (Type S) **ARCHIVED 03-14-2000**	Mar. 7, 1975	04-28-1998
5-397.120	Wire Fence (Design W-1) And Concrete Parapet (Type P-1) (With Separate End Post) **ARCHIVED 11-06-2013**	Dec. 18, 2003	04-17-2013
5-397.121	Concrete Railing (Type F-SW) With Bridge Slab Sidewalk And Separate End Post (With Concrete Wearing Course) **ARCHIVED 07-25-2005**	Nov. 26, 1985	03-04-2003
5-397.123	Concrete Railing (Type F-SW) With Bridge Slab Sidewalk And Separate End Post (Without Concete Wearing Course) **ARCHIVED 07-25-2005**	Nov. 26, 1985	03-04-2003
5-397.146	Treated Timber Bridge Rail **ARCHIVED 03-14-2000**	Dec. 08, 1988	03-04-2003
5-397.150	Metal Railing For Bikeways **ARCHIVED 03-14-2000**	July 22, 1980	02-27-1995
5-397.155	Metal Railing With Type J Base (With Separate End Post) **ARCHIVED 06-07-2005**	No Approval	02-10-1994
5-397.172	C.I.P. Bridge Rail Repair (Separate End Post) **ARCHIVED 03-14-2000**	Feb. 6, 1990	09-17-1998
5-397.173	C.I.P. Bridge Rail Repair (Without End Post) **ARCHIVED 03-14-2000**	No Approval	11-23-1993
5-397.200	Structural Tube Railing (Type T) **ARCHIVED 03-14-2000**		06-06-1994
5-397.201	Chain Link Enclosure For Pedestrian Bridges **ARCHIVED 03-14-2000**	Nov. 26, 1985	06-07-1994
5-397.403	Conduit System (Lighting) Type F (Or Concrete Parapet And Fence Railing) **ARCHIVED 05-24-2011**	Sept. 26, 2003	10-22-2009
5-397.404	Conduit System For Lighting (Solid Median) **ARCHIVED 03-14-2000**	June 27, 1980	09-17-1998
5-397.405	Conduit System For Lighting (Split Median) **ARCHIVED 03-14-2000**	June 27, 1980	09-17-1998

FIGURE N0.	DESCRIPTION	DATE APPROVED	DATE REVISED
5-397.502	36" Prestressed Concrete Beam (Pretensioned) 36-___ **ARCHIVED 02-07-2002**	Nov. 6, 1995	02-11-2000
5-397.503	40" Prestressed Concrete Beam (Pretensioned) 40-___ **ARCHIVED 02-07-2002**	Nov. 6, 1995	02-11-2000
5-397.506	28" Prestressed Concrete Beam (Pretensioned) 28M-___ **ARCHIVED 02-07-2002**	Nov. 6, 1995	02-11-2000
5-397.511	63" Prestressed Concrete Beam (Pretensioned) 63-___ **ARCHIVED 03-06-1997**	Nov. 6, 1995	
5-397.512	72" Prestressed Concrete Beam (Pretensioned) 72-___ **ARCHIVED 03-06-1997**	Nov. 6, 1995	
5-397.513	81" Prestressed Concrete Beam (Pretensioned) 81-___ **ARCHIVED 03-06-1997**	Nov. 6, 1995	
5-397.514	45" Prestressed Concrete Beam (Pretensioned) 45M-___ **ARCHIVED 05-24-2011**	Oct. 26, 2005	10-22-2009
5-397.515	54" Prestressed Concrete Beam (Pretensioned) 54M-___ **ARCHIVED 05-24-2011**	Oct. 26, 2005	10-22-2009
5-397.516	63" Prestressed Concrete Beam (Pretensioned) 63M-___ **ARCHIVED 05-24-2011**	Oct. 26, 2005	10-22-2009
5-397.517	72" Prestressed Concrete Beam (Pretensioned) 72M-___ **ARCHIVED 05-24-2011**	Oct. 26, 2005	10-22-2009
5-397.518	81" Prestressed Concrete Beam (Pretensioned) 81M-___ **ARCHIVED 05-24-2011**	Oct. 26, 2005	10-22-2009
5-397.521	22" Double Prestressed Concrete Tee-Beam Type 22-___ 6' Or 8' Wide Tee With Slab **ARCHIVED 05-05-2003**	June 18, 1979	11-06-2000
5-397.522	30" Double Prestressed Concrete Tee-Beam Type 30-___ 6' Or 8' Wide Tee With Slab **ARCHIVED 05-05-2003**	June 18, 1979	11-06-2000
5-397.525	22” Prestressed Concrete Double Tee Beam Type 22-___ 6’ Or 8’ Wide Tee Without Slab **ARCHIVED 03-26-2009**	Oct. 29, 2004	
5-397.526	30” Prestressed Concrete Double Tee Beam Type 30-___ 6’ Or 8’ Wide Tee Without Slab **ARCHIVED 03-26-2009**	Oct. 29, 2004	

FIGURE N0.	DESCRIPTION	DATE APPROVED	DATE REVISED
5-397.629	Waterproof Expansion Device For Repair Work With Type F Barrier **ARCHIVED 03-14-2000**	No Approval	08-22-2002

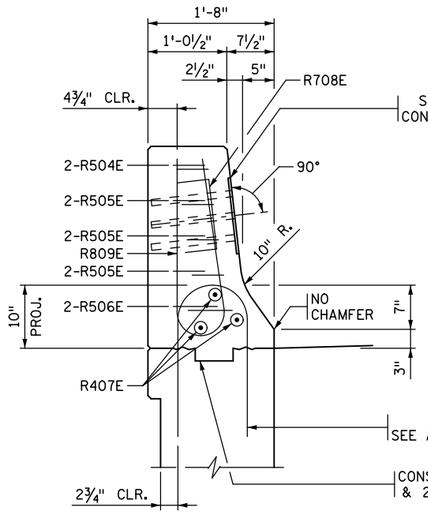

SECTION A-A

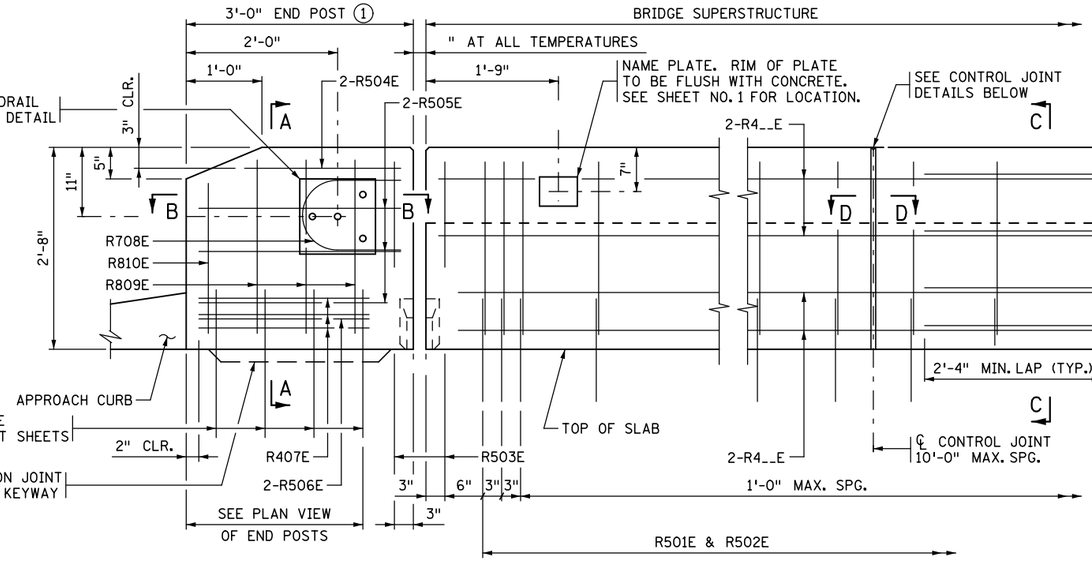

EXPANSION JOINT

(EXPANSION DEVICE NOT SHOWN)

CONTROL JOINT

INSIDE ELEVATION OF BARRIER

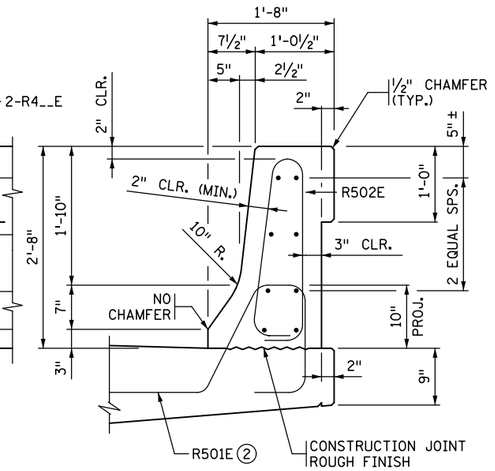

SECTION C-C

BILL OF REINFORCEMENT FOR BARRIER				
BAR	NO.	LENGTH	SHAPE	LOCATION
R501E		5'-7"		BARRIER DOWEL
R502E		6'-2"		BARRIER VERTICAL
R503E		4'-4"		BARRIER VERTICAL
R504E		2'-8"		END POST
R505E		3'-6"		END POST
R506E		3'-4"		END POST
R407E		2'-3"		END POST
R708E		4'-1"		END POST
R809E		5'-0"		END POST
R810E		4'-5"		END POST
R4__E				BARRIER LONGIT.
R4__E				BARRIER LONGIT.
R4__E				BARRIER LONGIT.
R4__E				BARRIER LONGIT.
R4__E				BARRIER LONGIT.

DESIGNER NOTE
(REMOVE PRIOR TO PLOTTING FINAL PLAN):
FOR BRIDGES WITH SUPERELEVATION EXCEEDING 2%, SHOW DIMENSIONS FOR BOTH THE FRONT AND BACK FACE OF THE BARRIER. ALSO VERIFY THAT BAR R501E HAS 10" MIN. PROJECTION WHEN CROSS SLOPE VARIES FROM NORMAL 0.02 FT/FT

BARRIER MEETS TEST LEVEL 4 REQUIREMENTS OF NCHRP REPORT 350

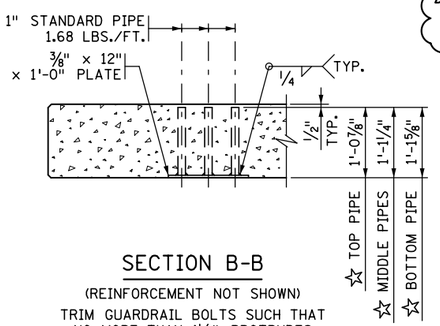

SECTION B-B

(REINFORCEMENT NOT SHOWN)

TRIM GUARDRAIL BOLTS SUCH THAT NO MORE THAN 1½" PROTRUDES FROM BACK FACE OF BARRIER.

☆ DIMENSIONS INCLUDE ⅜" PLATE

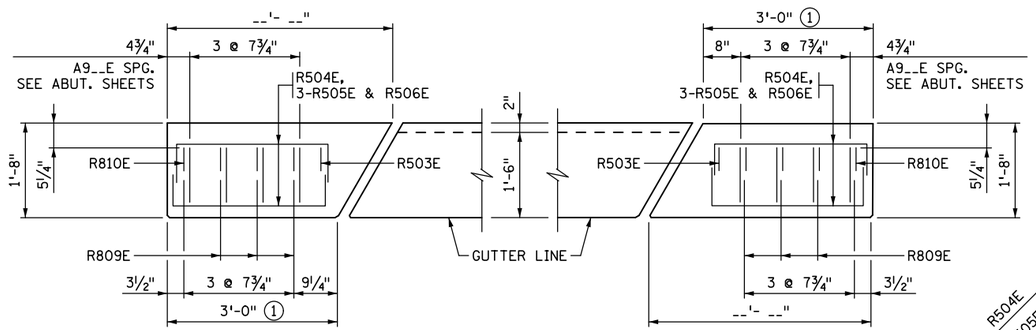

PLAN VIEW OF END POSTS

EXPANSION JOINT (DEVICE NOT SHOWN)

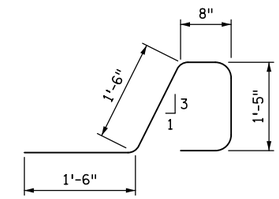

R501E

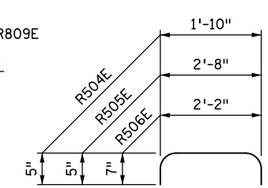

R504E, R505E & R506E

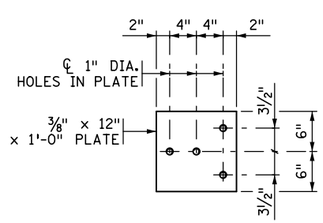

GUARDRAIL CONNECTION DETAIL

GALVANIZE AFTER FABRICATION PER SPEC. 3394
ESTIMATED WEIGHT = 23 LBS

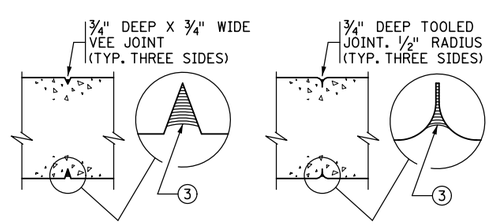

SECTION D-D

CONTRACTOR OPTION 1

SECTION D-D

CONTRACTOR OPTION 2

CONTROL JOINT DETAILS

WHEN USING SLIP FORM METHOD TO PLACE THE CONCRETE, CUT JOINT 3 INCHES DEEP USING MARGIN TROWEL OR SIMILAR MEANS IMMEDIATELY AFTER CONCRETE PLACEMENT (TYP. THREE SIDES)

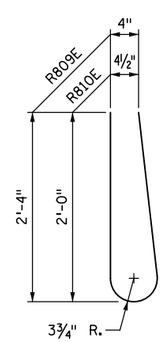

R809E & R810E

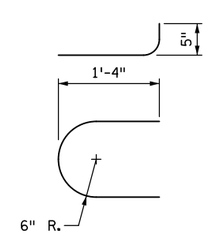

R708E

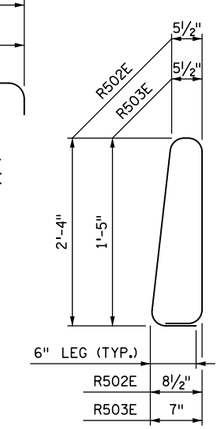

R502E & R503E

GENERAL NOTES

PAYMENT LENGTH SHALL BE MEASURED BETWEEN THE OUTSIDE FACES OF THE BARRIER.

CONCRETE BARRIER = 464 LBS./FT. (0.115 CU. YDS./FT.)

FINISH ALL EDGES OF BARRIER AND END POST WITH ½" CHAMFER, EXCEPT WHERE OTHERWISE NOTED.

MAXIMUM SPACING OF CONTROL JOINTS SHALL BE 10 FT. SEE SUPERSTRUCTURE SHEET FOR JOINT SPACING.

GUARDRAIL CONNECTION TO BE STRUCTURAL STEEL, SPEC. 3306.

GUARDRAIL CONNECTION AND NAME PLATE TO BE CONSIDERED INCIDENTAL TO BARRIER.

BARRIER QUANTITIES ARE LISTED IN SUMMARY OF QUANTITIES FOR SUPERSTRUCTURE.

① END POST DIMENSIONS ARE ALONG GUTTER LINE OR OUTSIDE FACE OF END POST.

② PLACE BAR ON TOP OF BOTTOM REINFORCEMENT MAT.

③ JOINT SEALANT PER MnDOT APPROVED/QUALIFIED PRODUCTS LIST - CRACK AND JOINT MATERIALS - SILICONE JOINT SEALERS.

REVISION: 11-03-2015

APPROVED: NOVEMBER 6, 2013

Nancy Daubenberger
STATE BRIDGE ENGINEER

CERTIFIED BY _____ LICENSED PROFESSIONAL ENGINEER _____ DATE

NAME: LIC. NO.

TITLE: CONCRETE BARRIER (TYPE F, TL-4)
WITH SEPARATE END POST
(WITHOUT CONCRETE WEARING COURSE)

DES: DR: APPROVED:
CHK: CHK:

SHEET NO. OF SHEETS

FIG. 5-397.114

BRIDGE NO.

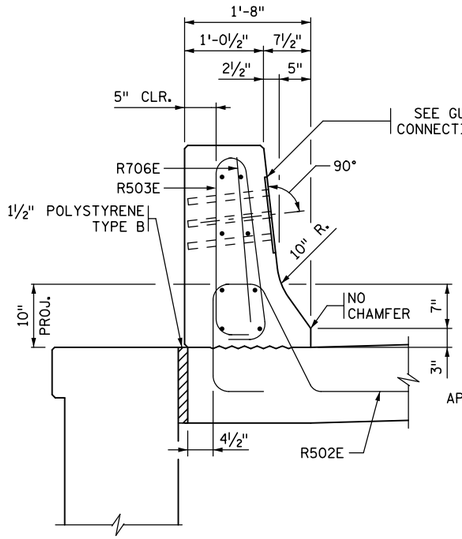

SECTION A-A

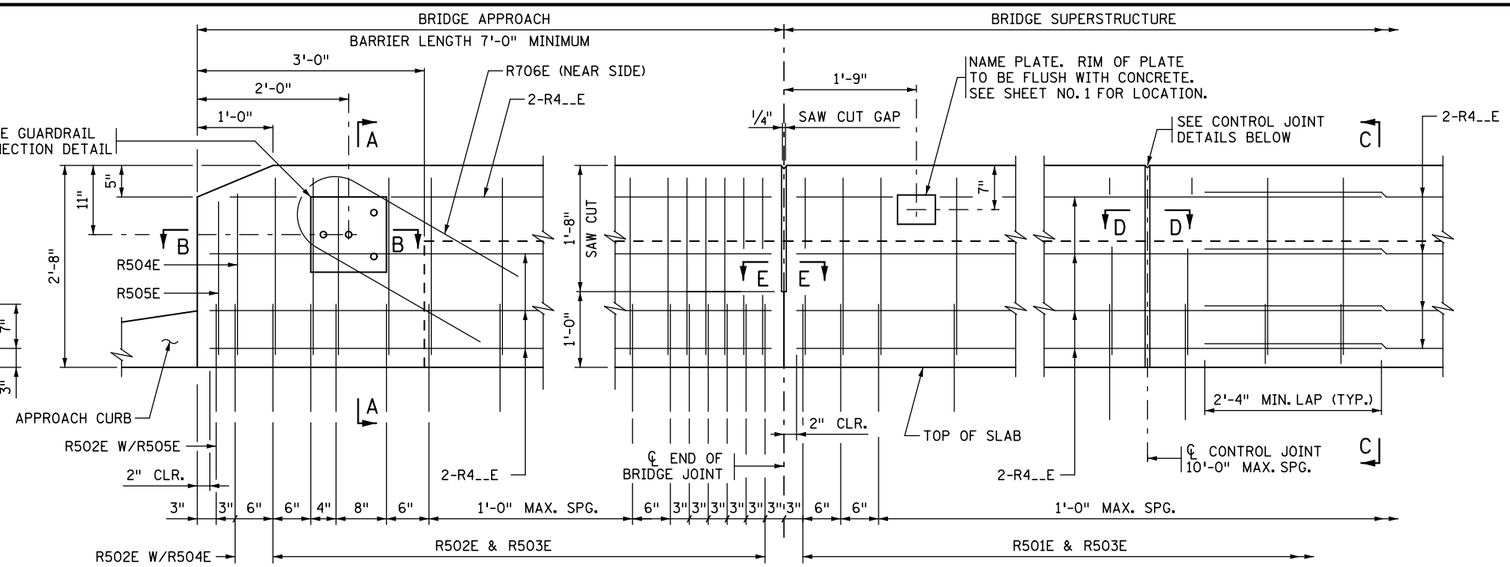

JOINT AT ABUTMENT

CONTROL JOINT

INSIDE ELEVATION OF BARRIER

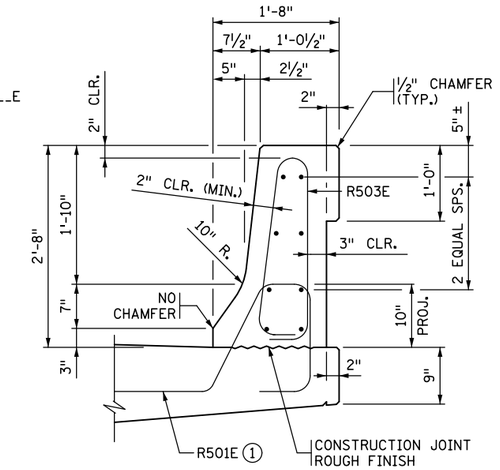

SECTION C-C

DESIGNER NOTE
(REMOVE PRIOR TO PLOTTING FINAL PLANS):
FOR BRIDGES WITH SUPERELEVATION EXCEEDING 2%, SHOW THE BARRIER FRONT FACE DIMENSIONS AS INDICATED ON THIS SHEET, AND ALSO CALCULATE AND SHOW THE BARRIER BACK FACE DIMENSIONS. ALSO VERIFY THAT BAR R501E HAS 10" MIN. PROJECTION WHEN CROSS SLOPE VARIES FROM NORMAL 0.02 FT/FT

BARRIER MEETS TEST LEVEL 4 REQUIREMENTS OF NCHRP REPORT 350

BILL OF REINFORCEMENT FOR BARRIER				
BAR	NO.	LENGTH	SHAPE	LOCATION
R501E		5'-7"		BARRIER DOWEL
R502E		5'-9"		BARRIER DOWEL
R503E		6'-2"		BARRIER VERTICAL
R504E		5'-8"		BARRIER VERTICAL
R505E		5'-6"		BARRIER VERTICAL
R706E		6'-6"		BARRIER VERTICAL
R4__E				BARRIER LONGIT.
R4__E				BARRIER LONGIT.
R4__E				BARRIER LONGIT.
R4__E				BARRIER LONGIT.
R4__E				BARRIER LONGIT.
R4__E				BARRIER LONGIT.

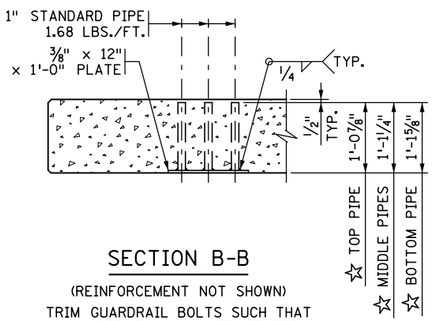

SECTION B-B

(REINFORCEMENT NOT SHOWN)

TRIM GUARDRAIL BOLTS SUCH THAT NO MORE THAN 1½" PROTRUDES FROM BACK FACE OF BARRIER.

☆ DIMENSIONS INCLUDE ⅜" PLATE

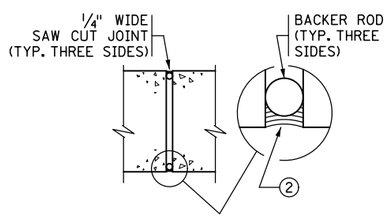

SECTION E-E

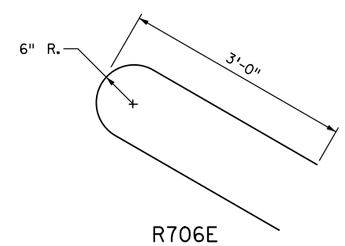

R706E

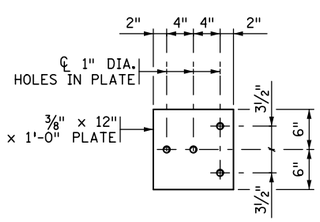

GUARDRAIL CONNECTION DETAIL

GALVANIZE AFTER FABRICATION PER SPEC. 3394
ESTIMATED WEIGHT = 23 LBS

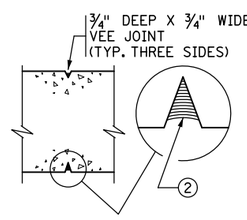

SECTION D-D

CONTRACTOR OPTION 1

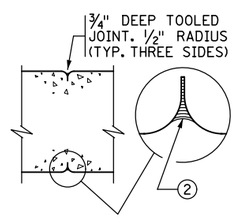

SECTION D-D

CONTRACTOR OPTION 2

CONTROL JOINT DETAILS

WHEN USING SLIP FORM METHOD TO PLACE THE CONCRETE, CUT JOINT 3 INCHES DEEP USING MARGIN TROWEL OR SIMILAR MEANS IMMEDIATELY AFTER CONCRETE PLACEMENT (TYP. THREE SIDES)

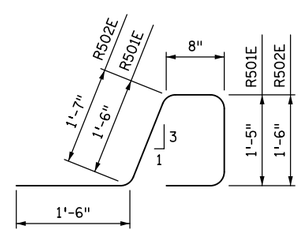

R501E, R502E

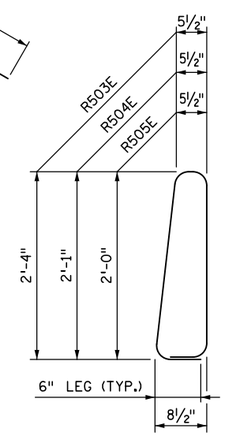

R503E, R504E & R505E

GENERAL NOTES

MEASURE PAYMENT LENGTH BETWEEN THE OUTSIDE FACES OF THE BARRIER.

CONCRETE BARRIER = 464 LBS./FT. (0.115 CU. YDS./FT.)

FINISH ALL EDGES OF BARRIER WITH ½" CHAMFER, EXCEPT WHERE OTHERWISE NOTED.

SPACE CONTROL JOINTS AT 10 FT. MAXIMUM. SEE SUPERSTRUCTURE SHEET FOR JOINT SPACING.

GUARDRAIL CONNECTION TO BE STRUCTURAL STEEL, SPEC. 3306.

GUARDRAIL CONNECTION AND NAME PLATE TO BE CONSIDERED INCIDENTAL TO BARRIER.

BARRIER QUANTITIES ARE LISTED IN SUMMARY OF QUANTITIES FOR SUPERSTRUCTURE.

① PLACE BAR ON TOP OF BOTTOM REINFORCEMENT MAT.

② JOINT SEALANT PER MnDOT APPROVED/QUALIFIED PRODUCTS LIST - CRACK AND JOINT MATERIALS - SILICONE JOINT SEALERS.

REVISION:

APPROVED: JANUARY 13, 2015
Nancy Daubenberger
STATE BRIDGE ENGINEER

CERTIFIED BY _____ LICENSED PROFESSIONAL ENGINEER _____ DATE
NAME: LIC. NO.

TITLE: CONCRETE BARRIER (TYPE F, TL-4)
INTEGRAL OR SEMI-INTEGRAL ABUTMENT WITH INTEGRAL END POST (WITHOUT CONCRETE WEARING COURSE)

DES: DR: CHK: CHK:

SHEET NO. OF SHEETS

FIG. 5-397.115(A)

APPROVED:

BRIDGE NO.

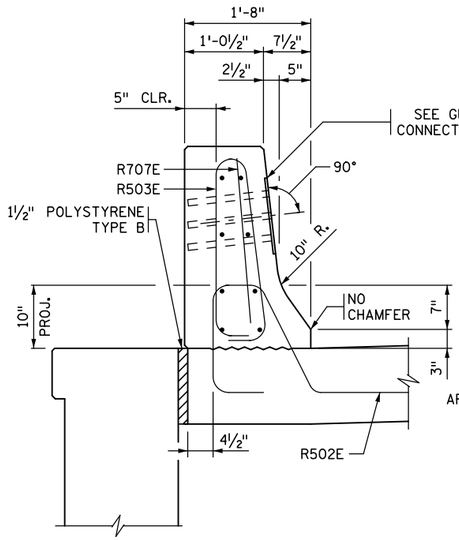

SECTION A-A

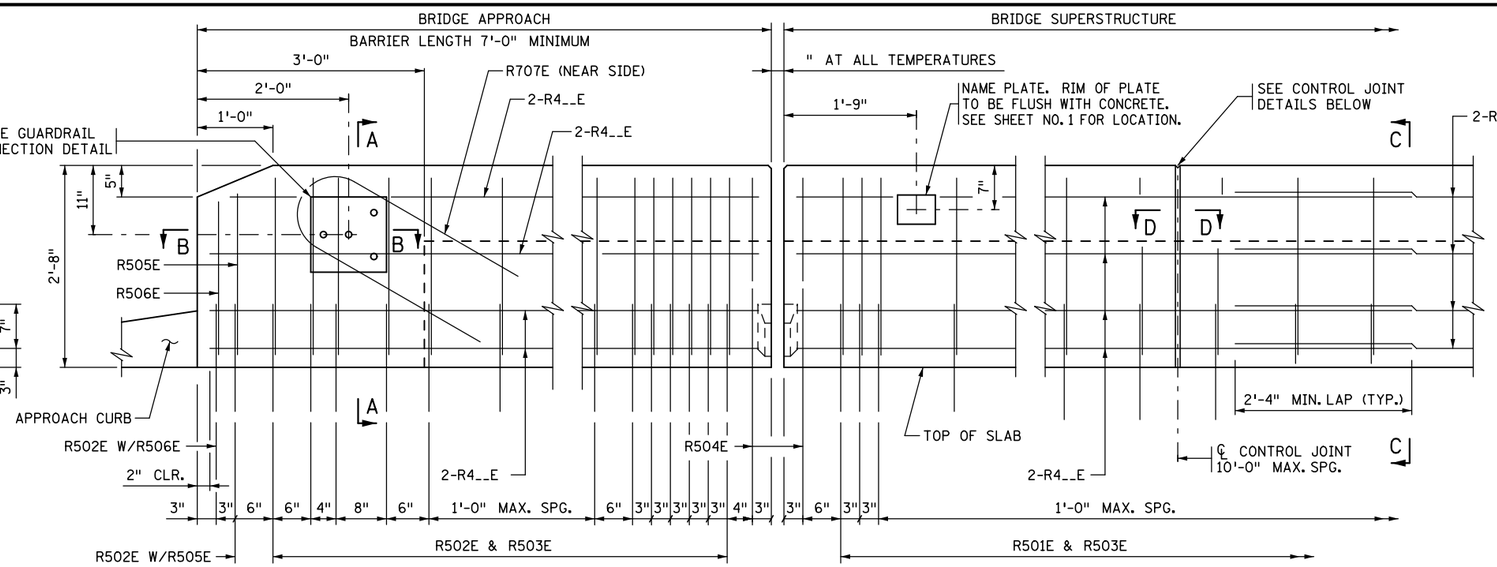

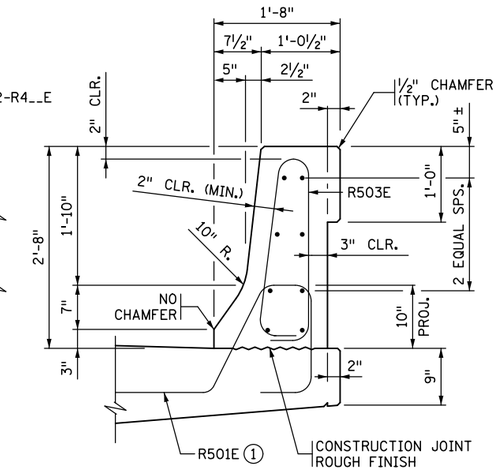

SECTION C-C

DESIGNER NOTE
(REMOVE PRIOR TO PLOTTING FINAL PLANS):
FOR BRIDGES WITH SUPERELEVATION EXCEEDING 2%, SHOW THE BARRIER FRONT FACE DIMENSIONS AS INDICATED ON THIS SHEET, AND ALSO CALCULATE AND SHOW THE BARRIER BACK FACE DIMENSIONS. ALSO VERIFY THAT BAR R501E HAS 10" MIN. PROJECTION WHEN CROSS SLOPE VARIES FROM NORMAL 0.02 FT/FT

EXPANSION JOINT

EXPANSION JOINT NOT SHOWN

CONTROL JOINT

INSIDE ELEVATION OF BARRIER

CONCRETE WEARING COURSE NOT SHOWN
(7'-0" BARRIER ON APPROACH SHOWN)

BARRIER MEETS TEST LEVEL 4 REQUIREMENTS OF NCHRP REPORT 350

BILL OF REINFORCEMENT FOR BARRIER				
BAR	NO.	LENGTH	SHAPE	LOCATION
R501E		5'-7"		BARRIER DOWEL
R502E		5'-9"		BARRIER DOWEL
R503E		6'-2"		BARRIER VERTICAL
R504E		4'-4"		BARRIER VERTICAL
R505E		5'-8"		BARRIER VERTICAL
R506E		5'-6"		BARRIER VERTICAL
R707E		6'-6"		BARRIER VERTICAL
R4__E				BARRIER LONGIT.
R4__E				BARRIER LONGIT.
R4__E				BARRIER LONGIT.
R4__E				BARRIER LONGIT.
R4__E				BARRIER LONGIT.
R4__E				BARRIER LONGIT.

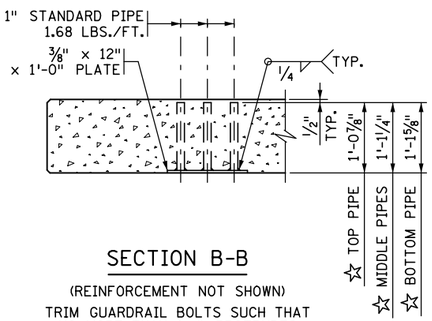

SECTION B-B

(REINFORCEMENT NOT SHOWN)

TRIM GUARDRAIL BOLTS SUCH THAT NO MORE THAN 1½" PROTRUDES FROM BACK FACE OF BARRIER.

☆ DIMENSIONS INCLUDE ⅜" PLATE

R707E

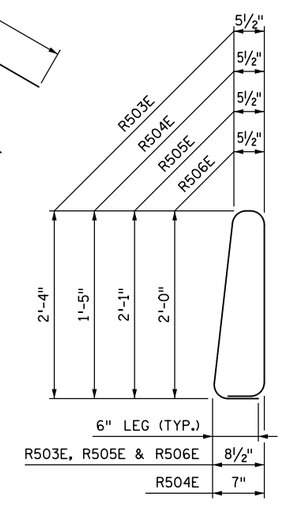

R503E, R504E, R505E & R506E

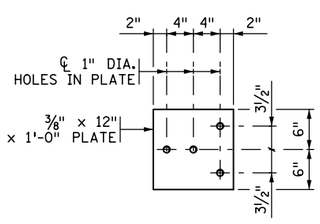

GUARDRAIL CONNECTION DETAIL

GALVANIZE AFTER FABRICATION PER SPEC. 3394
ESTIMATED WEIGHT = 23 LBS

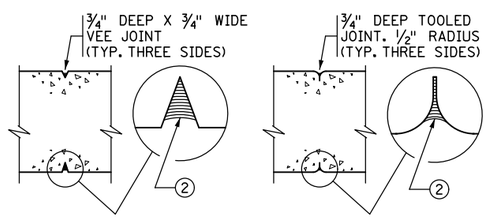

SECTION D-D
CONTRACTOR OPTION 1

SECTION D-D
CONTRACTOR OPTION 2

CONTROL JOINT DETAILS

WHEN USING SLIP FORM METHOD TO PLACE THE CONCRETE, CUT JOINT 3 INCHES DEEP USING MARGIN TROWEL OR SIMILAR MEANS IMMEDIATELY AFTER CONCRETE PLACEMENT (TYP. THREE SIDES)

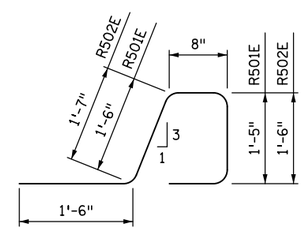

R501E, R502E

GENERAL NOTES

MEASURE PAYMENT LENGTH BETWEEN THE OUTSIDE FACES OF THE BARRIER.

CONCRETE BARRIER = 464 LBS./FT. (0.115 CU. YDS./FT.)

FINISH ALL EDGES OF BARRIER WITH ½" CHAMFER, EXCEPT WHERE OTHERWISE NOTED.

SPACE CONTROL JOINTS AT 10 FT. MAXIMUM. SEE SUPERSTRUCTURE SHEET FOR JOINT SPACING.

GUARDRAIL CONNECTION TO BE STRUCTURAL STEEL, SPEC. 3306.

GUARDRAIL CONNECTION AND NAME PLATE TO BE CONSIDERED INCIDENTAL TO BARRIER.

BARRIER QUANTITIES ARE LISTED IN SUMMARY OF QUANTITIES FOR SUPERSTRUCTURE.

① PLACE BAR ON TOP OF BOTTOM REINFORCEMENT MAT.

② JOINT SEALANT PER MnDOT APPROVED/QUALIFIED PRODUCTS LIST - CRACK AND JOINT MATERIALS - SILICONE JOINT SEALERS.

REVISION:

APPROVED: JANUARY 13, 2015
Nancy Daubenberger
STATE BRIDGE ENGINEER

CERTIFIED BY _____ LICENSED PROFESSIONAL ENGINEER _____ DATE
NAME: LIC. NO.

TITLE: CONCRETE BARRIER (TYPE F, TL-4)
PARAPET ABUTMENT WITH INTEGRAL END POST (WITHOUT CONCRETE WEARING COURSE)

DES: DR: CHK: CHK:

SHEET NO. OF SHEETS

FIG. 5-397.115(B)

APPROVED:

BRIDGE NO.

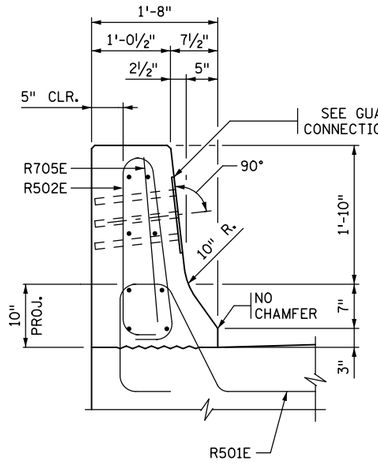

SECTION A-A

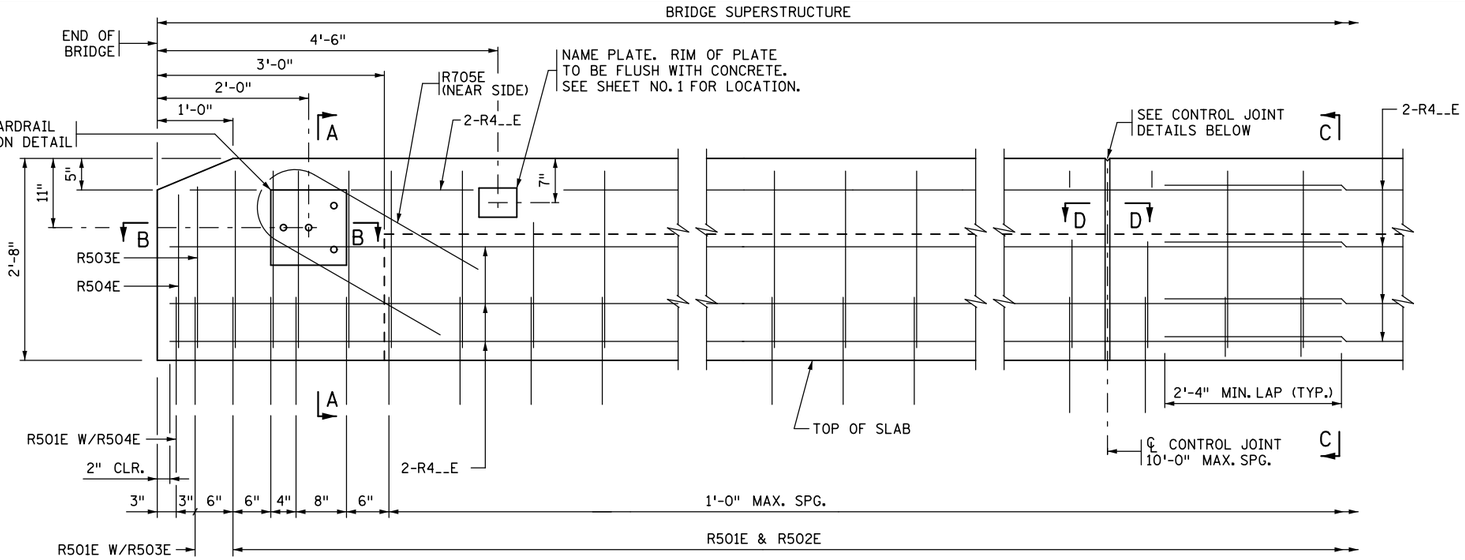

END OF BRIDGE

CONTROL JOINT

INSIDE ELEVATION OF BARRIER

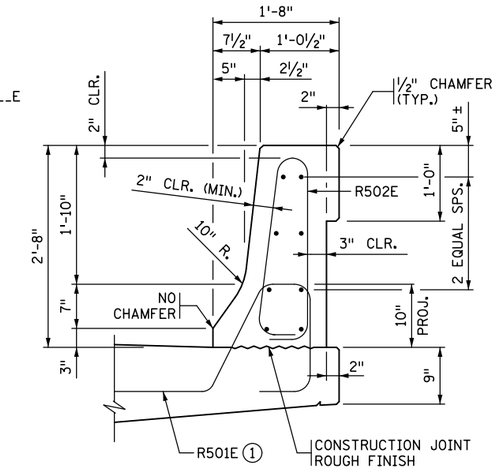

SECTION C-C

DESIGNER NOTE
(REMOVE PRIOR TO PLOTTING FINAL PLANS):
FOR BRIDGES WITH SUPERELEVATION EXCEEDING 2%, SHOW THE BARRIER FRONT FACE DIMENSIONS AS INDICATED ON THIS SHEET, AND ALSO CALCULATE AND SHOW THE BARRIER BACK FACE DIMENSIONS. ALSO VERIFY THAT BAR R501E HAS 10" MIN. PROJECTION WHEN CROSS SLOPE VARIES FROM NORMAL 0.02 FT/FT

BARRIER MEETS TEST LEVEL 4 REQUIREMENTS OF NCHRP REPORT 350

BILL OF REINFORCEMENT FOR BARRIER

BAR	NO.	LENGTH	SHAPE	LOCATION
R501E		5'-7"		BARRIER DOWEL
R502E		6'-2"		BARRIER VERTICAL
R503E		5'-8"		BARRIER VERTICAL
R504E		5'-6"		BARRIER VERTICAL
R705E		6'-6"		BARRIER VERTICAL
R4__E				BARRIER LONGIT.
R4__E				BARRIER LONGIT.
R4__E				BARRIER LONGIT.
R4__E				BARRIER LONGIT.
R4__E				BARRIER LONGIT.
R4__E				BARRIER LONGIT.

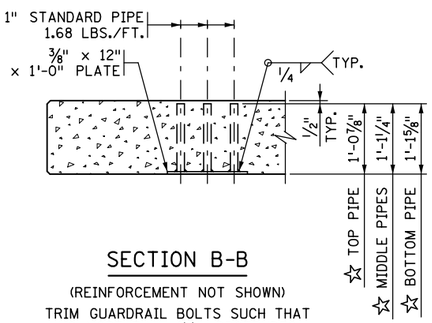

SECTION B-B

(REINFORCEMENT NOT SHOWN)

TRIM GUARDRAIL BOLTS SUCH THAT NO MORE THAN 1½" PROTRUDES FROM BACK FACE OF BARRIER.

☆ DIMENSIONS INCLUDE ⅜" PLATE

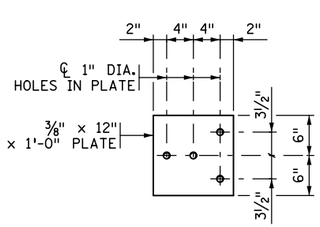

GUARDRAIL CONNECTION DETAIL

GALVANIZE AFTER FABRICATION PER SPEC. 3394
ESTIMATED WEIGHT = 23 LBS

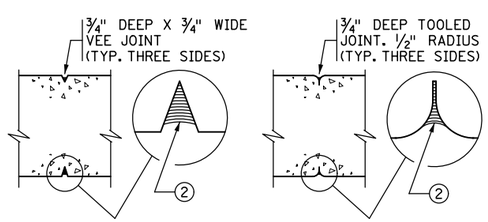

SECTION D-D
CONTRACTOR OPTION 1

SECTION D-D
CONTRACTOR OPTION 2

CONTROL JOINT DETAILS

WHEN USING SLIP FORM METHOD TO PLACE THE CONCRETE, CUT JOINT 3 INCHES DEEP USING MARGIN TROWEL OR SIMILAR MEANS IMMEDIATELY AFTER CONCRETE PLACEMENT (TYP. THREE SIDES)

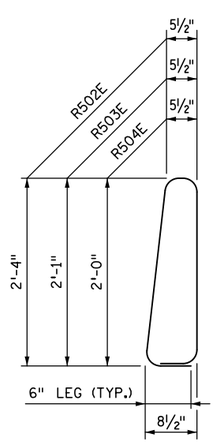

R502E,
R503E & R504E

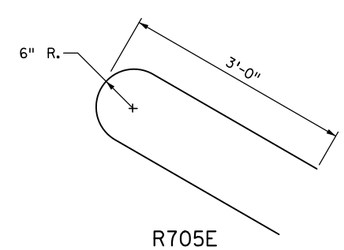

R705E

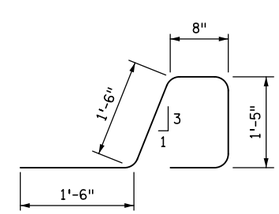

R501E

GENERAL NOTES

MEASURE PAYMENT LENGTH BETWEEN THE OUTSIDE FACES OF THE BARRIER.

CONCRETE BARRIER = 464 LBS./FT. (0.115 CU. YDS./FT.)

FINISH ALL EDGES OF BARRIER WITH ½" CHAMFER, EXCEPT WHERE OTHERWISE NOTED.

SPACE CONTROL JOINTS AT 10 FT. MAXIMUM. SEE SUPERSTRUCTURE SHEET FOR JOINT SPACING.

GUARDRAIL CONNECTION TO BE STRUCTURAL STEEL, SPEC. 3306.

GUARDRAIL CONNECTION AND NAME PLATE TO BE CONSIDERED INCIDENTAL TO BARRIER.

BARRIER QUANTITIES ARE LISTED IN SUMMARY OF QUANTITIES FOR SUPERSTRUCTURE.

① PLACE BAR ON TOP OF BOTTOM REINFORCEMENT MAT.

② JOINT SEALANT PER MnDOT APPROVED/QUALIFIED PRODUCTS LIST - CRACK AND JOINT MATERIALS - SILICONE JOINT SEALERS.

REVISION:

APPROVED: JANUARY 13, 2015
Nancy Daubenberger
STATE BRIDGE ENGINEER

CERTIFIED BY _____ LICENSED PROFESSIONAL ENGINEER _____ DATE
NAME: LIC. NO.

TITLE: CONCRETE BARRIER (TYPE F, TL-4)
INTEGRAL OR SEMI-INTEGRAL ABUTMENT WITH INTEGRAL END POST (WITHOUT CONCRETE WEARING COURSE) NO APPROACH PANEL

DES: DR: CHK: CHK:

SHEET NO. OF SHEETS

FIG. 5-397.115(C)

APPROVED:

BRIDGE NO.

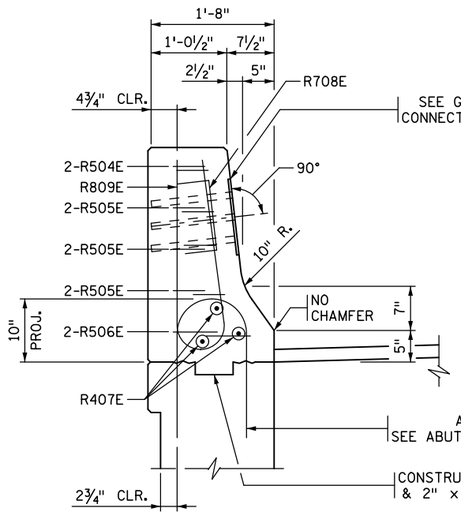

SECTION A-A

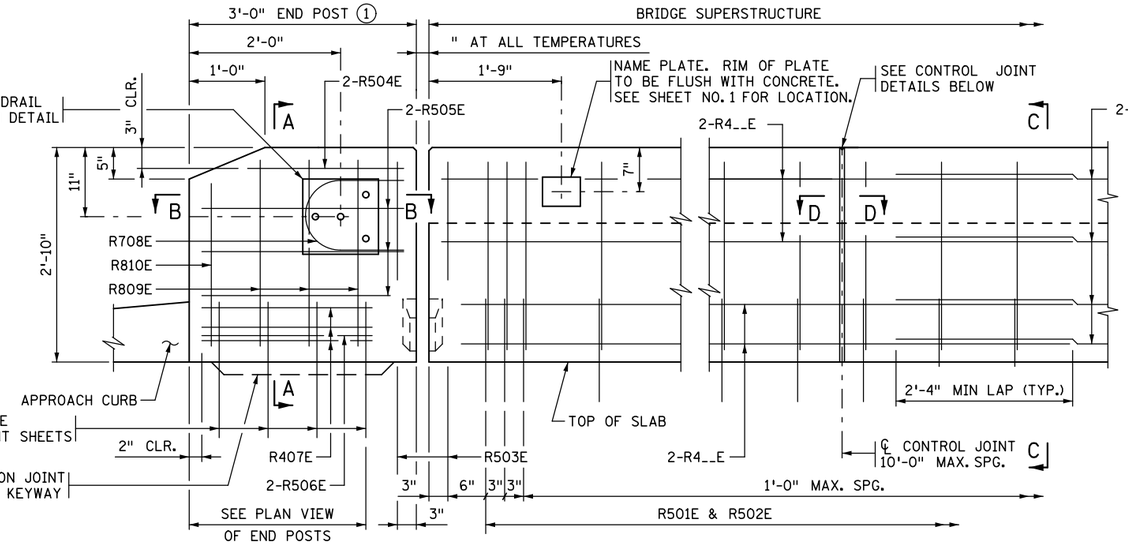

EXPANSION JOINT

(EXPANSION DEVICE NOT SHOWN)

CONTROL JOINT

INSIDE ELEVATION OF BARRIER

(CONCRETE WEARING COURSE NOT SHOWN)

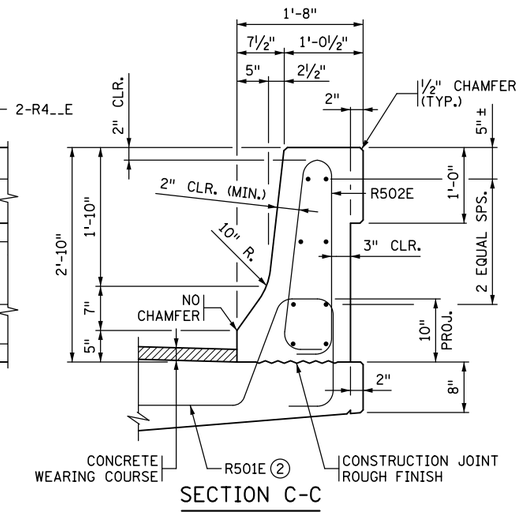

SECTION C-C

DESIGNER NOTE
(REMOVE PRIOR TO PLOTTING FINAL PLAN):
FOR BRIDGES WITH SUPERELEVATION EXCEEDING 2%, SHOW DIMENSIONS FOR BOTH THE FRONT AND BACK FACE OF THE BARRIER. ALSO VERIFY THAT BAR R501E HAS 10" MIN. PROJECTION WHEN CROSS SLOPE VARIES FROM NORMAL 0.02 FT/FT

BARRIER MEETS TEST LEVEL 4 REQUIREMENTS OF NCHRP REPORT 350

BILL OF REINFORCEMENT FOR BARRIER

BAR	NO.	LENGTH	SHAPE	LOCATION
R501E		5'-3"		BARRIER DOWEL
R502E		6'-6"		BARRIER VERTICAL
R503E		4'-8"		BARRIER VERTICAL
R504E		2'-8"		END POST
R505E		3'-6"		END POST
R506E		3'-4"		END POST
R407E		2'-3"		END POST
R708E		4'-1"		END POST
R809E		5'-4"		END POST
R810E		4'-9"		END POST
R4__E				BARRIER LONGIT.
R4__E				BARRIER LONGIT.
R4__E				BARRIER LONGIT.
R4__E				BARRIER LONGIT.
R4__E				BARRIER LONGIT.

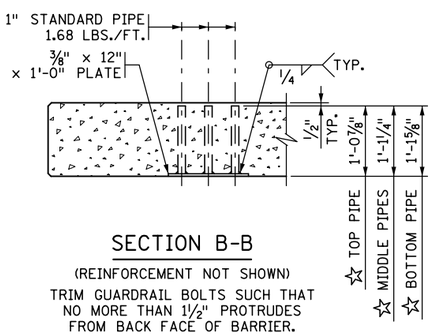

SECTION B-B

(REINFORCEMENT NOT SHOWN)

TRIM GUARDRAIL BOLTS SUCH THAT NO MORE THAN 1½" PROTRUDES FROM BACK FACE OF BARRIER.

☆ DIMENSIONS INCLUDE ⅜" PLATE

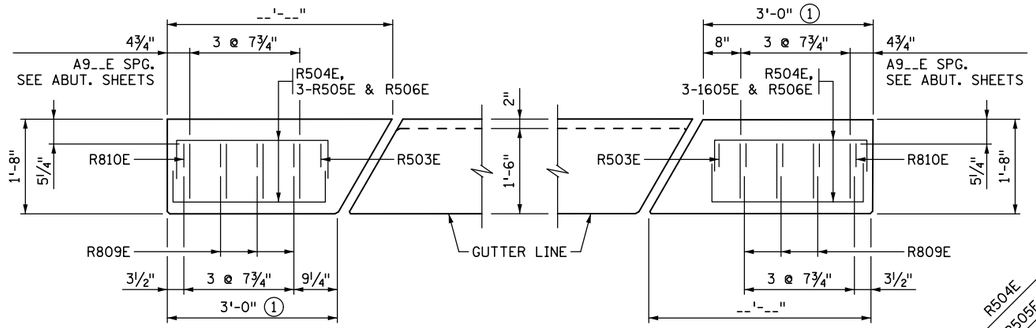

PLAN VIEW OF END POSTS

EXPANSION JOINT (DEVICE NOT SHOWN)

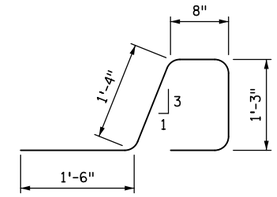

R501E

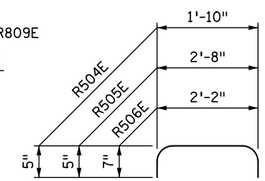

R504E, R505E & R506E

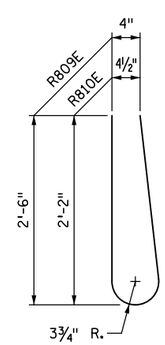

R809E & R810E

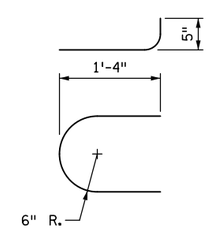

R708E

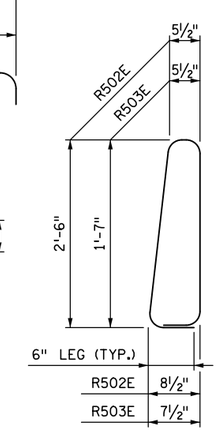

R502E & R503E

GENERAL NOTES

PAYMENT LENGTH SHALL BE MEASURED BETWEEN THE OUTSIDE FACES OF THE BARRIER.

CONCRETE BARRIER = 502 LBS./FT. (0.124 CU. YDS./FT.)

FINISH ALL EDGES OF BARRIER AND END POST WITH ½" CHAMFER, EXCEPT WHERE OTHERWISE NOTED.

MAXIMUM SPACING OF CONTROL JOINTS SHALL BE 10 FT. SEE SUPERSTRUCTURE SHEET FOR JOINT SPACING.

GUARDRAIL CONNECTION TO BE STRUCTURAL STEEL, SPEC. 3306.

GUARDRAIL CONNECTION AND NAME PLATE TO BE CONSIDERED INCIDENTAL TO BARRIER.

BARRIER QUANTITIES ARE LISTED IN SUMMARY OF QUANTITIES FOR SUPERSTRUCTURE.

① END POST DIMENSIONS ARE ALONG GUTTER LINE OR OUTSIDE FACE OF END POST.

② PLACE BAR ON TOP OF BOTTOM REINFORCEMENT MAT.

③ JOINT SEALANT PER MnDOT APPROVED/QUALIFIED PRODUCTS LIST - CRACK AND JOINT MATERIALS - SILICONE JOINT SEALERS.

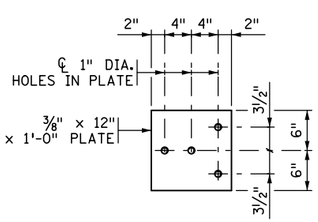

GUARDRAIL CONNECTION DETAIL

GALVANIZE AFTER FABRICATION PER SPEC. 3394
ESTIMATED WEIGHT = 23 LBS

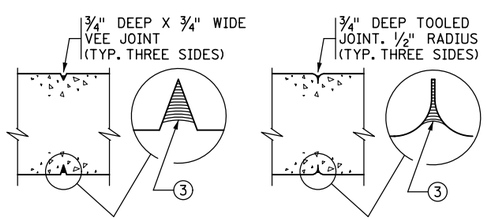

SECTION D-D
CONTRACTOR OPTION 1

SECTION D-D
CONTRACTOR OPTION 2

CONTROL JOINT DETAILS

WHEN USING SLIP FORM METHOD TO PLACE THE CONCRETE, CUT JOINT 3 INCHES DEEP USING MARGIN TROWEL OR SIMILAR MEANS IMMEDIATELY AFTER CONCRETE PLACEMENT (TYP. THREE SIDES)

REVISION: 11-03-2015

APPROVED: NOVEMBER 6, 2013
Nancy Daubenberger
STATE BRIDGE ENGINEER

REVISION DATE: 08-13-2015

CERTIFIED BY _____ LICENSED PROFESSIONAL ENGINEER _____ DATE
NAME: LIC. NO.

TITLE: CONCRETE BARRIER (TYPE F, TL-4)
WITH SEPARATE END POST
(WITH CONCRETE WEARING COURSE)

DES: DR: CHK: CHK:
SHEET NO. OF SHEETS

APPROVED:

FIG. 5-397.116

BRIDGE NO.

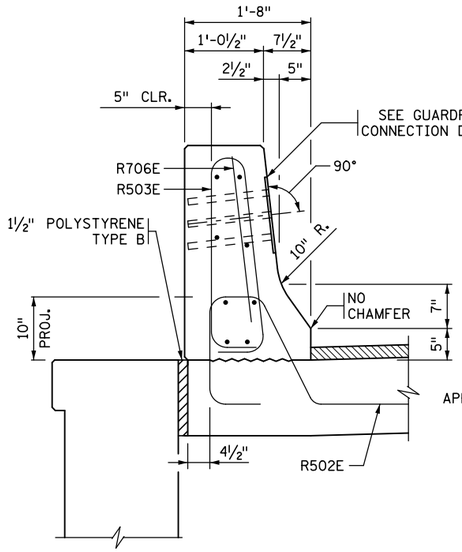

SECTION A-A

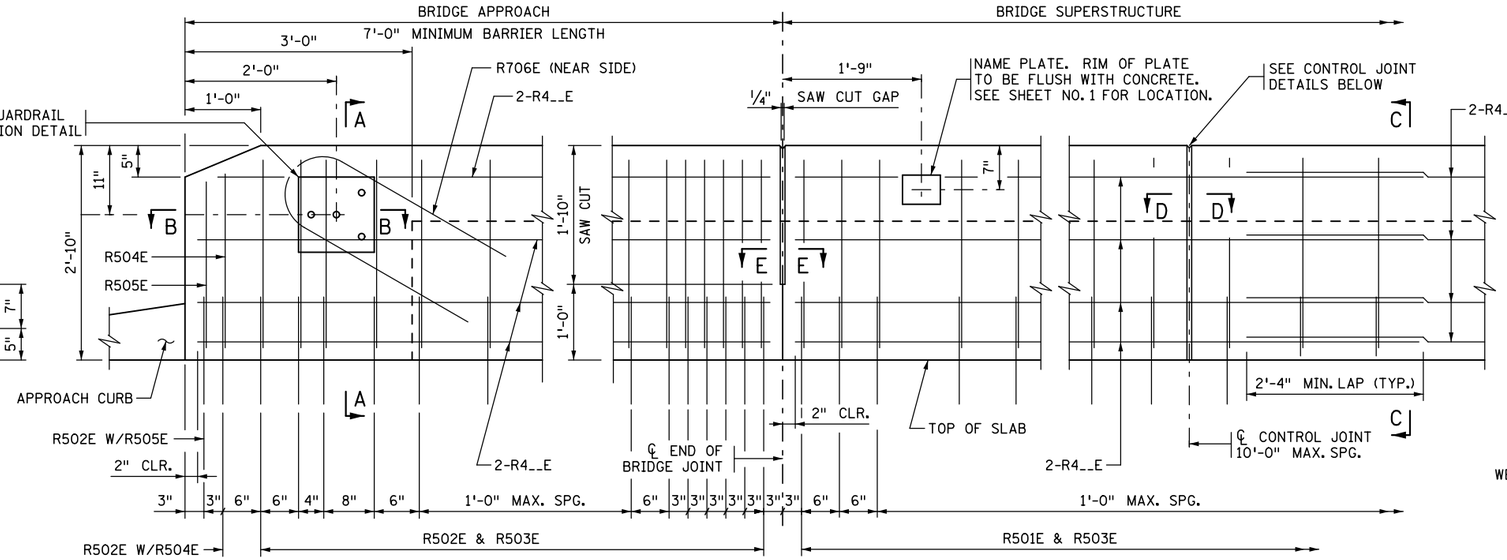

JOINT AT ABUTMENT

INSIDE ELEVATION OF BARRIER

(CONCRETE WEARING COURSE NOT SHOWN)

CONTROL JOINT

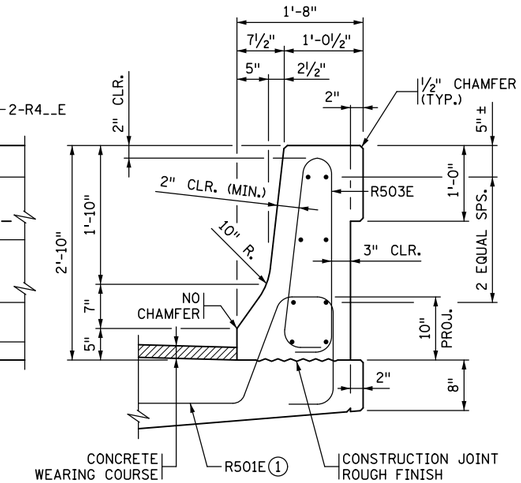

SECTION C-C

DESIGNER NOTE
(REMOVE PRIOR TO PLOTTING FINAL PLANS):
FOR BRIDGES WITH SUPERELEVATION EXCEEDING 2%, SHOW THE BARRIER FRONT FACE DIMENSIONS AS INDICATED ON THIS SHEET, AND ALSO CALCULATE AND SHOW THE BARRIER BACK FACE DIMENSIONS. ALSO VERIFY THAT BAR R501E HAS 10" MIN. PROJECTION WHEN CROSS SLOPE VARIES FROM NORMAL 0.02 FT/FT

BARRIER MEETS TEST LEVEL 4 REQUIREMENTS OF NCHRP REPORT 350

BILL OF REINFORCEMENT FOR BARRIER

BAR	NO.	LENGTH	SHAPE	LOCATION
R501E		5'-3"		BARRIER DOWEL
R502E		5'-5"		BARRIER DOWEL
R503E		6'-6"		BARRIER VERTICAL
R504E		6'-0"		BARRIER VERTICAL
R505E		5'-10"		BARRIER VERTICAL
R706E		6'-6"		BARRIER VERTICAL
R4__E				BARRIER LONGIT.
R4__E				BARRIER LONGIT.
R4__E				BARRIER LONGIT.
R4__E				BARRIER LONGIT.
R4__E				BARRIER LONGIT.
R4__E				BARRIER LONGIT.

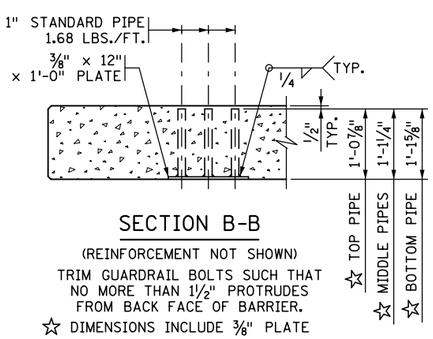

SECTION B-B

(REINFORCEMENT NOT SHOWN)

TRIM GUARDRAIL BOLTS SUCH THAT NO MORE THAN 1½" PROTRUDES FROM BACK FACE OF BARRIER.

☆ DIMENSIONS INCLUDE ⅜" PLATE

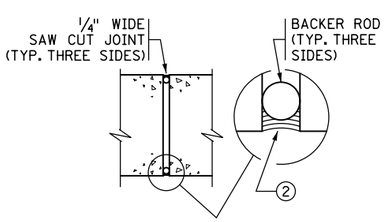

SECTION E-E

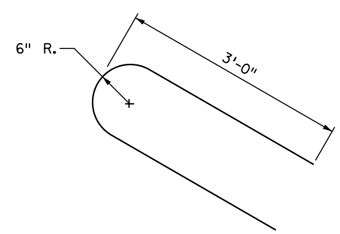

R706E

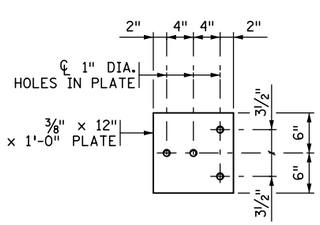

GUARDRAIL CONNECTION DETAIL

GALVANIZE AFTER FABRICATION PER SPEC. 3394
ESTIMATED WEIGHT = 23 LBS

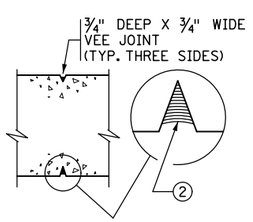

SECTION D-D

CONTRACTOR OPTION 1

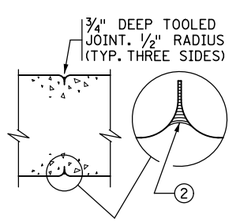

SECTION D-D

CONTRACTOR OPTION 2

CONTROL JOINT DETAILS

WHEN USING SLIP FORM METHOD TO PLACE THE CONCRETE, CUT JOINT 3 INCHES DEEP USING MARGIN TROWEL OR SIMILAR MEANS IMMEDIATELY AFTER CONCRETE PLACEMENT (TYP. THREE SIDES)

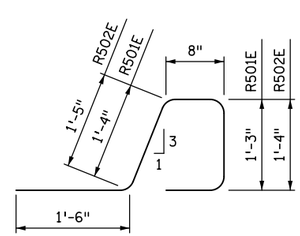

R501E, R502E

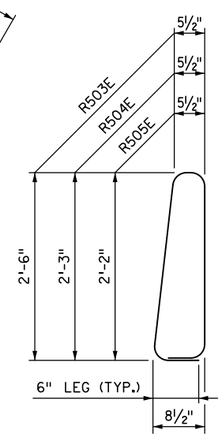

R503E, R504E & R505E

GENERAL NOTES

MEASURE PAYMENT LENGTH BETWEEN THE OUTSIDE FACES OF THE BARRIER.

CONCRETE BARRIER = 502 LBS./FT. (0.124 CU. YDS./FT.)

FINISH ALL EDGES OF BARRIER AND END POST WITH ½" CHAMFER, EXCEPT WHERE OTHERWISE NOTED.

SPACE OF CONTROL JOINTS AT 10 FT. MAXIMUM. SEE SUPERSTRUCTURE SHEET FOR JOINT SPACING.

GUARDRAIL CONNECTION TO BE STRUCTURAL STEEL, SPEC. 3306.

GUARDRAIL CONNECTION AND NAME PLATE TO BE CONSIDERED INCIDENTAL TO BARRIER.

BARRIER QUANTITIES ARE LISTED IN SUMMARY OF QUANTITIES FOR SUPERSTRUCTURE.

① PLACE BAR ON TOP OF BOTTOM REINFORCEMENT MAT.

② JOINT SEALANT PER MnDOT APPROVED/QUALIFIED PRODUCTS LIST - CRACK AND JOINT MATERIALS - SILICONE JOINT SEALERS.

REVISION: 11-03-2015

APPROVED: JANUARY 13, 2015
Nancy Daubenberger
STATE BRIDGE ENGINEER

CERTIFIED BY _____ LICENSED PROFESSIONAL ENGINEER _____ DATE
NAME: LIC. NO.

TITLE: CONCRETE BARRIER (TYPE F, TL-4)
INTEGRAL OR SEMI-INTEGRAL ABUTMENT WITH INTEGRAL END POST (WITH CONCRETE WEARING COURSE)

DES: DR: CHK: CHK:

SHEET NO. OF SHEETS

FIG. 5-397.117(A)

APPROVED:

BRIDGE NO.

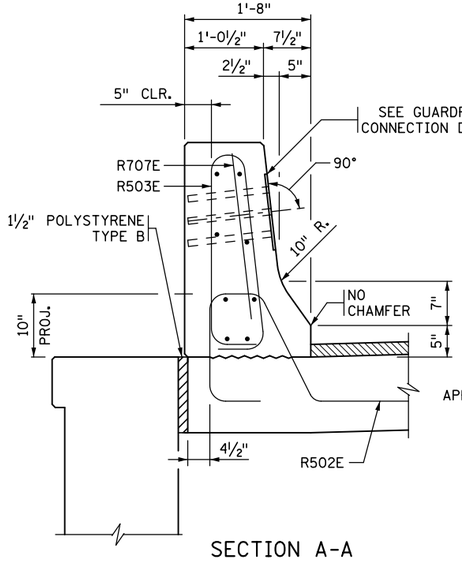

SECTION A-A

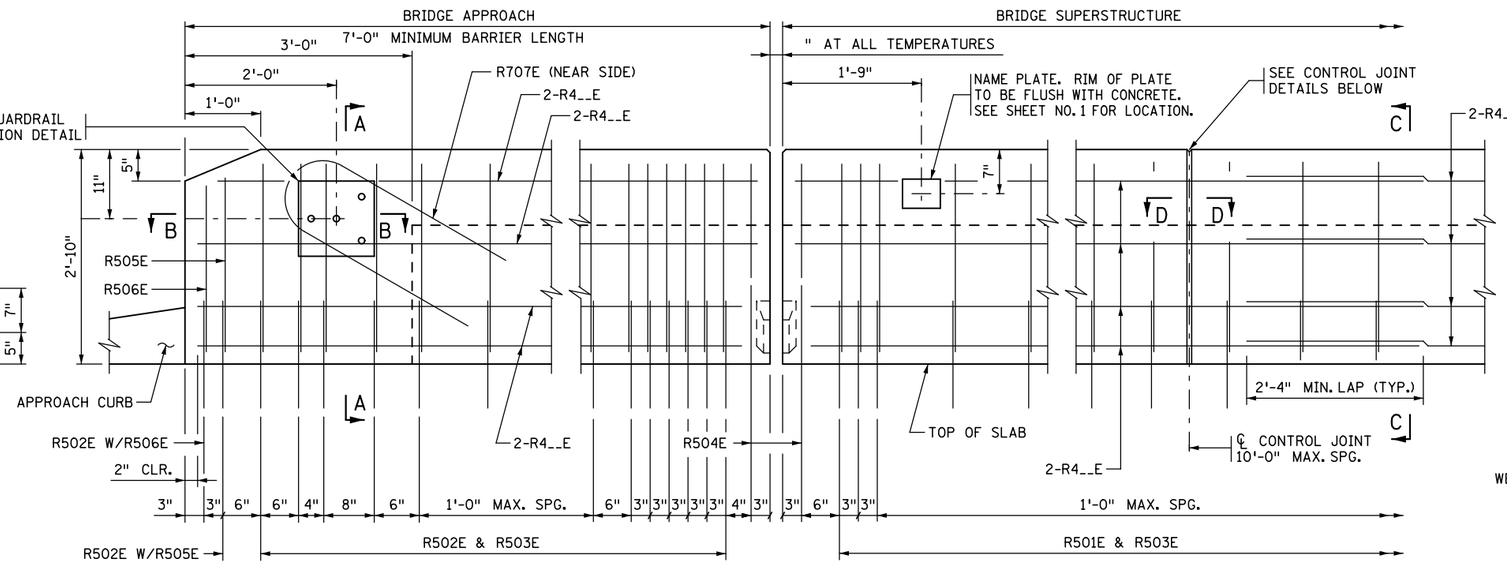

EXPANSION JOINT

EXPANSION JOINT NOT SHOWN

CONTROL JOINT

INSIDE ELEVATION OF BARRIER

CONCRETE WEARING COURSE NOT SHOWN
(7'-0" BARRIER ON APPROACH SHOWN)

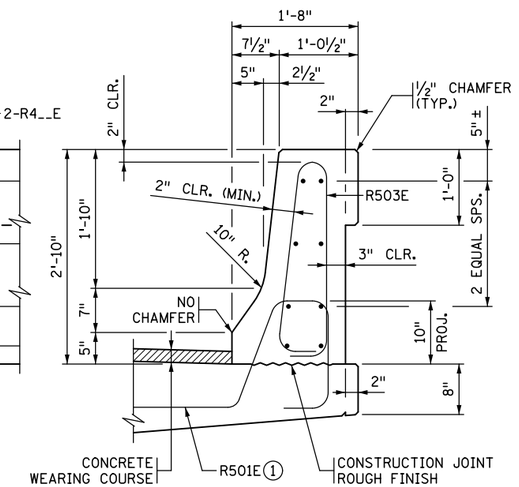

SECTION C-C

DESIGNER NOTE
(REMOVE PRIOR TO PLOTTING FINAL PLANS):
FOR BRIDGES WITH SUPERELEVATION EXCEEDING 2%, SHOW THE BARRIER FRONT FACE DIMENSIONS AS INDICATED ON THIS SHEET, AND ALSO CALCULATE AND SHOW THE BARRIER BACK FACE DIMENSIONS. ALSO VERIFY THAT BAR R501E HAS 10" MIN. PROJECTION WHEN CROSS SLOPE VARIES FROM NORMAL 0.02 FT/FT.

BARRIER MEETS TEST LEVEL 4 REQUIREMENTS OF NCHRP REPORT 350

BILL OF REINFORCEMENT FOR BARRIER

BAR	NO.	LENGTH	SHAPE	LOCATION
R501E		5'-3"		BARRIER DOWEL
R502E		5'-5"		BARRIER DOWEL
R503E		6'-6"		BARRIER VERTICAL
R504E		4'-8"		BARRIER VERTICAL
R505E		6'-0"		BARRIER VERTICAL
R506E		5'-10"		BARRIER VERTICAL
R707E		6'-6"		BARRIER VERTICAL
R4__E				BARRIER LONGIT.
R4__E				BARRIER LONGIT.
R4__E				BARRIER LONGIT.
R4__E				BARRIER LONGIT.
R4__E				BARRIER LONGIT.

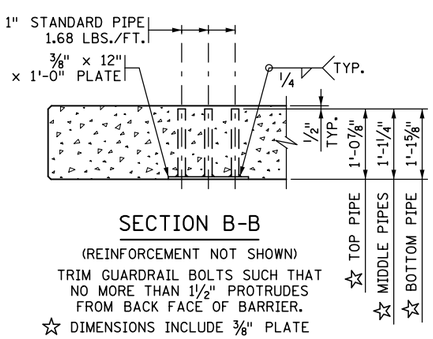

SECTION B-B

(REINFORCEMENT NOT SHOWN)

TRIM GUARDRAIL BOLTS SUCH THAT NO MORE THAN 1½" PROTRUDES FROM BACK FACE OF BARRIER.

☆ DIMENSIONS INCLUDE ⅜" PLATE

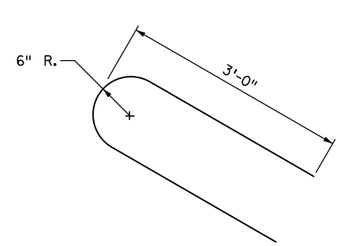

R707E

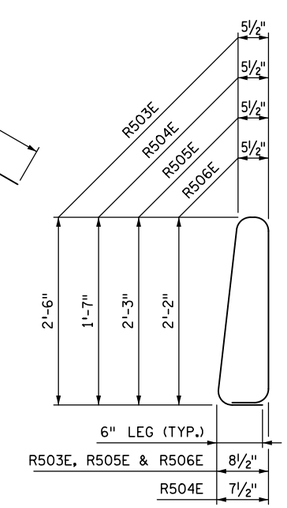

R503E, R504E, R505E & R506E

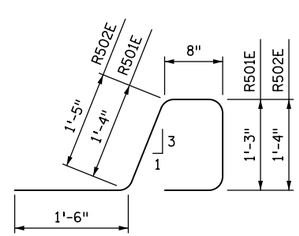

R501E, R502E

GENERAL NOTES

MEASURE PAYMENT LENGTH BETWEEN THE OUTSIDE FACES OF THE BARRIER.

CONCRETE BARRIER = 502 LBS./FT. (0.124 CU. YDS./FT.)

FINISH ALL EDGES OF BARRIER AND END POST WITH ½" CHAMFER, EXCEPT WHERE OTHERWISE NOTED.

SPACE OF CONTROL JOINTS AT BE 10 FT. MAXIMUM. SEE SUPERSTRUCTURE SHEET FOR JOINT SPACING.

GUARDRAIL CONNECTION TO BE STRUCTURAL STEEL, SPEC. 3306.

GUARDRAIL CONNECTION AND NAME PLATE TO BE CONSIDERED INCIDENTAL TO BARRIER.

BARRIER QUANTITIES ARE LISTED IN SUMMARY OF QUANTITIES FOR SUPERSTRUCTURE.

① PLACE BAR ON TOP OF BOTTOM REINFORCEMENT MAT.

② JOINT SEALANT PER MnDOT APPROVED/QUALIFIED PRODUCTS LIST - CRACK AND JOINT MATERIALS - SILICONE JOINT SEALERS.

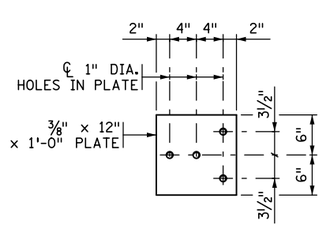

GUARDRAIL CONNECTION DETAIL

GALVANIZE AFTER FABRICATION PER SPEC. 3394
ESTIMATED WEIGHT = 23 LBS

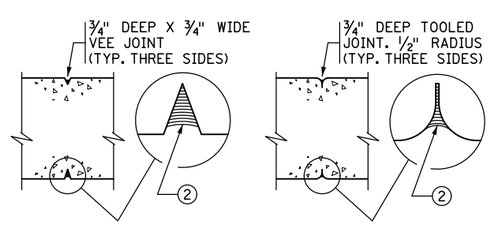

SECTION D-D
CONTRACTOR OPTION 1

SECTION D-D
CONTRACTOR OPTION 2

CONTROL JOINT DETAILS

WHEN USING SLIP FORM METHOD TO PLACE THE CONCRETE, CUT JOINT 3 INCHES DEEP USING MARGIN TROWEL OR SIMILAR MEANS IMMEDIATELY AFTER CONCRETE PLACEMENT (TYP. THREE SIDES)

REVISION:

APPROVED: JANUARY 13, 2015
Nancy Daubenberger
STATE BRIDGE ENGINEER

CERTIFIED BY _____ LICENSED PROFESSIONAL ENGINEER _____ DATE
NAME: LIC. NO.

TITLE: CONCRETE BARRIER (TYPE F, TL-4)
PARAPET ABUTMENT WITH INTEGRAL END POST (WITH CONCRETE WEARING COURSE)

DES: DR:
CHK: CHK:
SHEET NO. OF SHEETS

FIG. 5-397.117(B)

APPROVED:

BRIDGE NO.

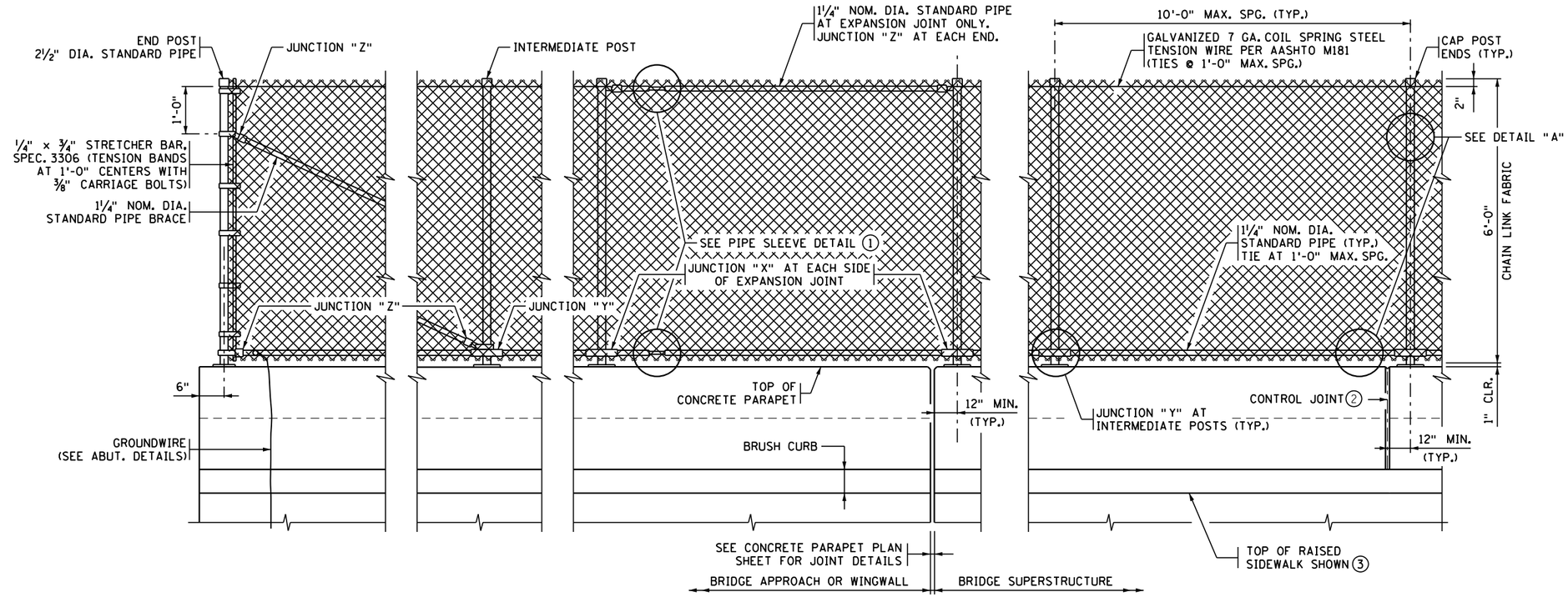

INSIDE ELEVATION OF RAILING

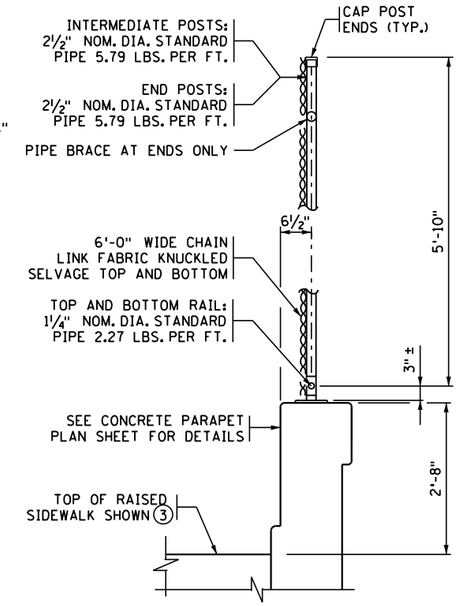

TYPICAL SECTION THROUGH FENCE

INTERMEDIATE POST SHOWN

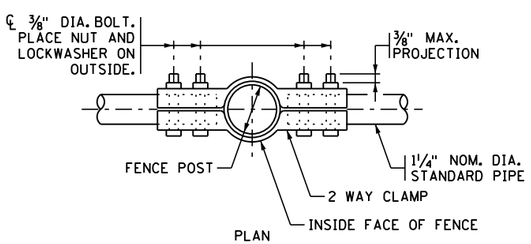

PLAN

2 WAY CLAMP BENDING TABLE	
GRADE OF FENCE	Ø
0° TO 2°	0°
2° TO 6°	4°
6° TO 10°	8°

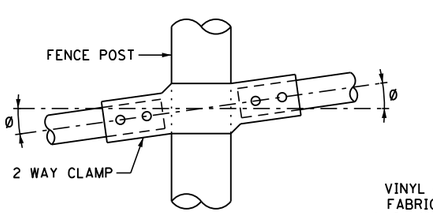

ELEVATION

JUNCTION "X"

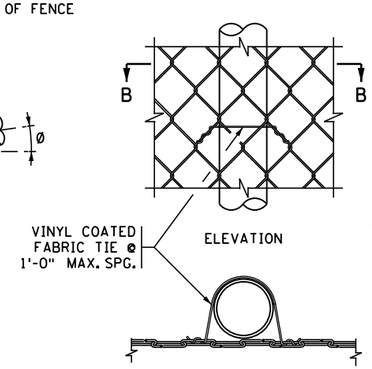

DETAIL "A"

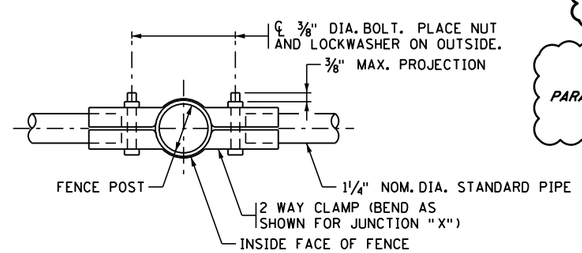

JUNCTION "Y"

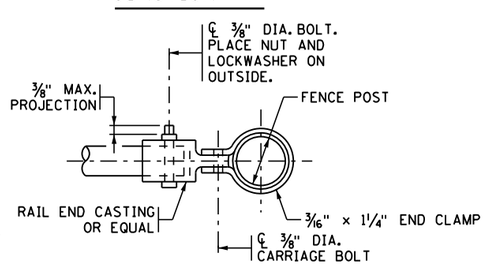

JUNCTION "Z"

DESIGNER NOTE
(REMOVE PRIOR TO PLOTTING FINAL PLAN):
FOR ROADWAY DESIGN SPEEDS GREATER THAN 45 MPH WIRE FENCE MUST BE PROTECTED BY A TRAFFIC BARRIER.

DESIGNER NOTE
(REMOVE PRIOR TO PLOTTING FINAL PLAN):
PARAPET SHOWN BASED ON STANDARD FIGURE 5-397.166. SELECT FINISH COATING TYPE (GALV. OR VINYL) IN SPECIAL PROVISION 2557.

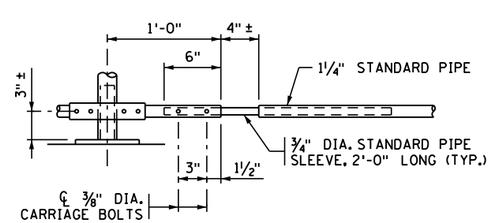

PIPE SLEEVE DETAIL ①

GENERAL NOTES

REFER TO SPEC. 2557 AND SPECIAL PROVISIONS FOR ADDITIONAL REQUIREMENTS AND BASIS OF PAYMENT.

MEASURE THE LENGTH OF "WIRE FENCE, DESIGN W-1" FOR PAYMENT BETWEEN THE CENTERS OF END RAILPOSTS.

CONTINUOUSLY GROUND ALL METAL FENCE; SEE SPECIAL PROVISIONS. REFER TO THE ELECTRICAL PLANS AND ELECTRICAL SPECIAL PROVISIONS FOR DETAILS REGARDING BONDING MULTIPLE ELECTRICAL GROUNDING SYSTEMS.

FURNISH AND INSTALL TYPE A FENCE POST ANCHORAGE PER B905 FENCE POST ANCHORAGE PLAN SHEET. INSTALL FENCE POSTS AND ANCHORAGES PLUMB UNLESS OTHERWISE NOTED. INSTALL END POSTS AND BRACING AT 500 FT. MAXIMUM INTERVALS.

INSTALL ALL POSTS WITH A MEANS TO SECURELY HOLD THE TOP TENSION WIRE IN POSITION AND ALLOW FOR THE REMOVAL AND REPLACEMENT OF A POST WITHOUT DAMAGING THE TOP TENSION WIRE.

PROVIDE WIRE TIES WITH 9 GA. (0.148" CORE) ALUMINUM PER ASTM B 211, ALLOY 1100 H18 WITH VINYL COATING (6 GA. AFTER COATING) OR 10 GA. (0.135" CORE) STEEL CL. 3 GALV. WIRE WITH FUSION BONDED VINYL COATING (9 GA. AFTER COATING). USE SAME VINYL THICKNESS COATING REQUIREMENTS AS VINYL COATED FABRIC.

USE 12 GA. GALVANIZED STEEL OR 9 GA. ALUMINUM ALLOY 1350-H19 HOG RINGS FOR TENSION WIRE TIES.

① PROVIDE PIPE SLEEVE IN SPAN BETWEEN THE VERTICAL FENCE POSTS AT EXPANSION JOINT. SEE SUPERSTRUCTURE SHEETS FOR EXP. JOINT LOCATION.

② INSTALL ℄ OF FENCE POST ANCHORAGE AT LEAST 12" FROM CONTROL JOINTS. SEE SUPERSTRUCTURE SHEETS AND CONC. PARAPET PLAN SHEET FOR CONTROL JOINT SPACING AND DETAILS.

③ FOR NON-RAISED SIDEWALK, SEE CONCRETE PARAPET SHEET.

REVISED: FEBRUARY 22, 2018

APPROVED: JANUARY 05, 2017
Kevin Western
STATE BRIDGE ENGINEER

CERTIFIED BY _____ LICENSED PROFESSIONAL ENGINEER _____ DATE
NAME: LIC. NO.

TITLE: WIRE FENCE (DESIGN W-1) AND CONCRETE PARAPET (TYPE P-1)

DES:	DR:	APPROVED:
CHK:	CHK:	
SHEET NO. OF SHEETS		

FIG. 5-397.119

BRIDGE NO.

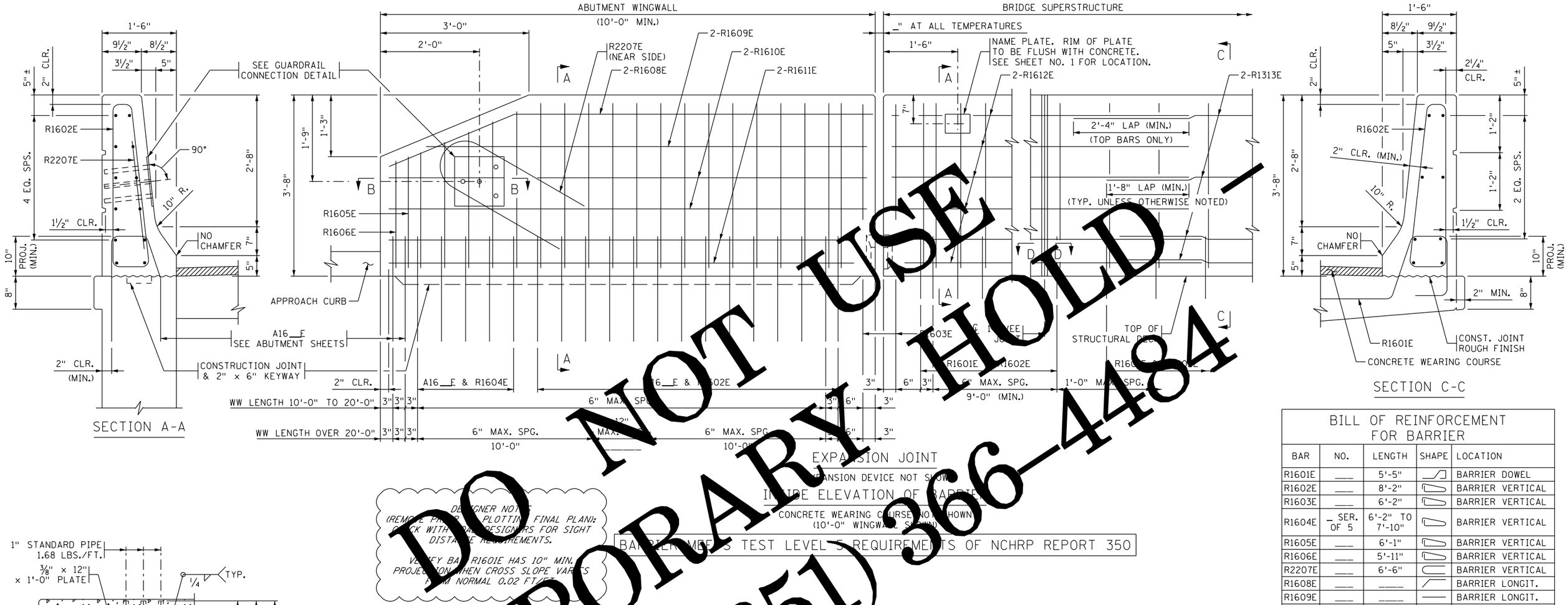

BILL OF REINFORCEMENT FOR BARRIER

BAR	NO.	LENGTH	SHAPE	LOCATION
R1601E	___	5'-5"		BARRIER DOWEL
R1602E	___	8'-2"		BARRIER VERTICAL
R1603E	___	6'-2"		BARRIER VERTICAL
R1604E	_ SER. OF 5	6'-2" TO 7'-10"		BARRIER VERTICAL
R1605E	___	6'-1"		BARRIER VERTICAL
R1606E	___	5'-11"		BARRIER VERTICAL
R2207E	___	6'-6"		BARRIER VERTICAL
R1608E	___	____		BARRIER LONGIT.
R1609E	___	____		BARRIER LONGIT.
R1610E	___	____		BARRIER LONGIT.
R1611E	___	____		BARRIER LONGIT.
R1612E	___	12'-6"		BARRIER LONGIT.
R1313E	___	____		BARRIER LONGIT.

GENERAL NOTES

LENGTH OF "TYPE F (TL-5) RAILING CONCRETE (3Y46 OR 3Y46A)" FOR PAYMENT SHALL BE MEASURED BETWEEN THE OUTSIDE FACES OF THE CONCRETE BARRIER.

CONCRETE BARRIER = 582 LBS./FT. (0.144 CU. YDS./FT.)

FINISH ALL EDGES OF BARRIER WITH ½" VEE, EXCEPT WHERE OTHERWISE NOTED.

MAXIMUM SPACING OF 1" VEE JOINTS SHALL BE 10 FT.

GUARDRAIL CONNECTION TO BE STRUCTURAL STEEL, Mn/DOT SPEC. 3306.

GUARDRAIL CONNECTION AND NAME PLATE TO BE CONSIDERED INCIDENTAL TO "TYPE F (TL-5) RAILING CONCRETE (3Y46 OR 3Y46A)".

BARRIER QUANTITIES ARE LISTED IN SUMMARY OF QUANTITIES FOR SUPERSTRUCTURE.

DO NOT USE — TEMPORARY HOLD — CALL (651) 366-4484

REVISED: 05-26-2006

APPROVED: JULY 25, 2005

STATE BRIDGE ENGINEER

CERTIFIED BY _____ LICENSED PROFESSIONAL ENGINEER _____ DATE

NAME: _____ LIC. NO. _____

TITLE: CONCRETE BARRIER (TYPE F, TL-5) WITH INTEGRAL END POST (WITH CONC. WEARING COURSE)

DES: _____ DR: _____ CHK: _____ CHK: _____

SHEET NO. __ OF __ SHEETS

FIG. 5-397.122

APPROVED:

BRIDGE NO. _____

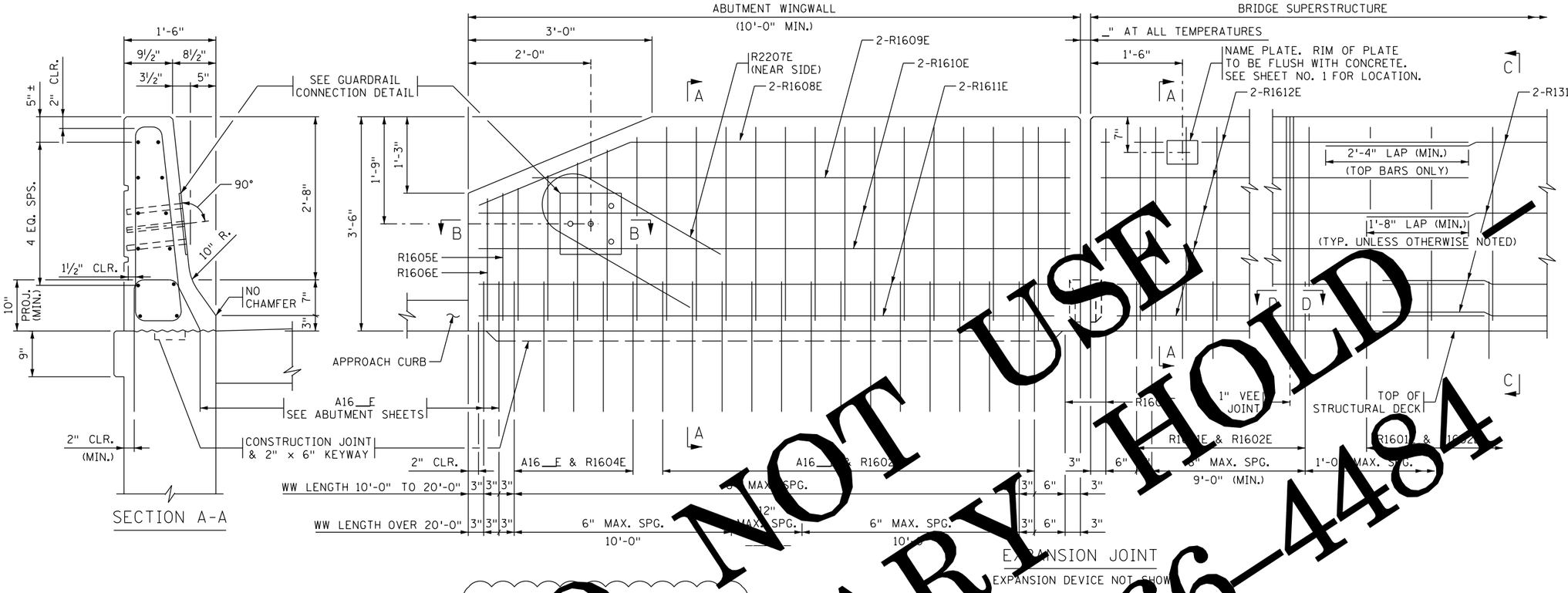

DESIGNER NOTES
(REMOVE PRIOR TO PLACING FINAL PLAN):
CHECK WITH ROAD DESIGNERS FOR SIGHT DISTANCE REQUIREMENTS.

VERIFY BAR R1601E HAS 10" MIN. PROJECTION WHEN CROSS SLOPE VARIES FROM NORMAL 0.02 FT/FT.

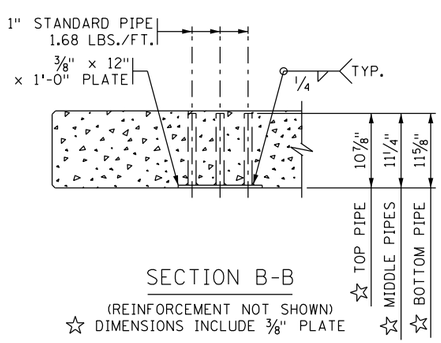

SECTION B-B

(REINFORCEMENT NOT SHOWN)
☆ DIMENSIONS INCLUDE ⅜" PLATE

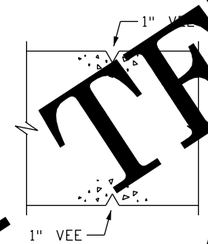

SECTION D-D

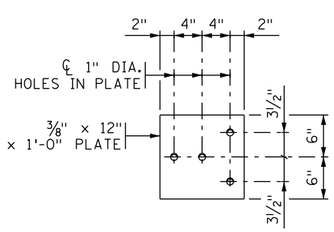

GUARDRAIL CONNECTION DETAIL

GALVANIZE AFTER FABRICATION PER Mn/DOT SPEC. 3394
ESTIMATED WEIGHT = 22 LBS

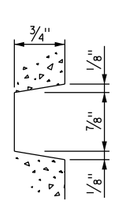

BARRIER RUSTICATION

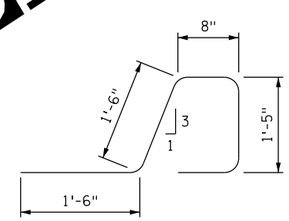

R1601E

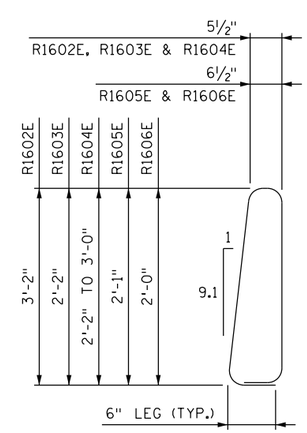

R1602E, R1603E, R1604E, R1605E & R1606E

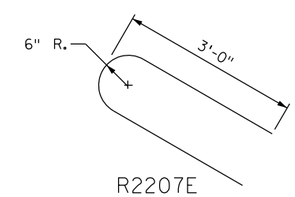

R2207E

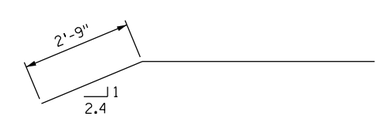

R1608E

BILL OF REINFORCEMENT FOR BARRIER				
BAR	NO.	LENGTH	SHAPE	LOCATION
R1601E	___	5'-7"		BARRIER DOWEL
R1602E	___	7'-10"		BARRIER VERTICAL
R1603E	___	5'-10"		BARRIER VERTICAL
R1604E	_ SER. OF 5	5'-10" TO 7'-6"		BARRIER VERTICAL
R1605E	___	5'-9"		BARRIER VERTICAL
R1606E	___	5'-7"		BARRIER VERTICAL
R2207E	___	6'-6"		BARRIER VERTICAL
R1608E	___	_____		BARRIER LONGIT.
R1609E	___	_____		BARRIER LONGIT.
R1610E	___	_____		BARRIER LONGIT.
R1611E	___	_____		BARRIER LONGIT.
R1612E	___	12'-6"		BARRIER LONGIT.
R1313E	___	_____		BARRIER LONGIT.

GENERAL NOTES

LENGTH OF "TYPE F (TL-5) RAILING CONCRETE (3Y46 OR 3Y46A)" FOR PAYMENT SHALL BE MEASURED BETWEEN THE OUTSIDE FACES OF THE CONCRETE BARRIER.

CONCRETE BARRIER = 545 LBS./FT. (0.134 CU. YDS./FT.)

FINISH ALL EDGES OF BARRIER WITH ½" VEE, EXCEPT WHERE OTHERWISE NOTED.

MAXIMUM SPACING OF 1" VEE JOINTS SHALL BE 10 FT.

GUARDRAIL CONNECTION TO BE STRUCTURAL STEEL, Mn/DOT SPEC. 3306.

GUARDRAIL CONNECTION AND NAME PLATE TO BE CONSIDERED INCIDENTAL TO "TYPE F (TL-5) RAILING CONCRETE (3Y46 OR 3Y46A)".

BARRIER QUANTITIES ARE LISTED IN SUMMARY OF QUANTITIES FOR SUPERSTRUCTURE.

DO NOT USE
TEMPORARY HOLD
CALL (651) 366-4484

REVISED: 05-26-2006

APPROVED: JULY 25, 2005

STATE BRIDGE ENGINEER

CERTIFIED BY _____ LICENSED PROFESSIONAL ENGINEER _____ DATE

NAME: _____ LIC. NO. _____

TITLE: CONCRETE BARRIER (TYPE F, TL-5)
WITH INTEGRAL END POST
(WITHOUT CONC. WEARING COURSE)

DES: _____ DR: _____
CHK: _____ CHK: _____

SHEET NO. __ OF __ SHEETS

FIG. 5-397.124

APPROVED:

BRIDGE NO. _____

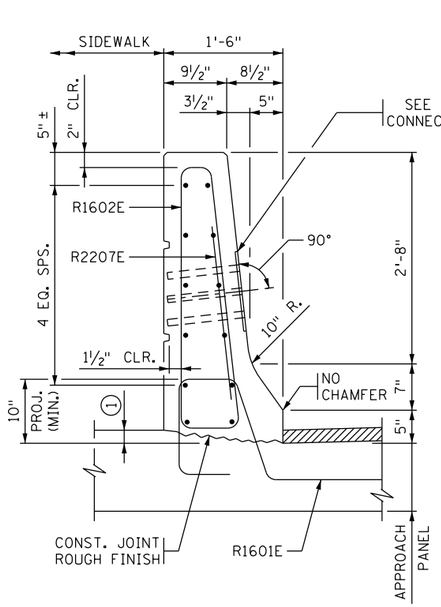

SECTION A-A

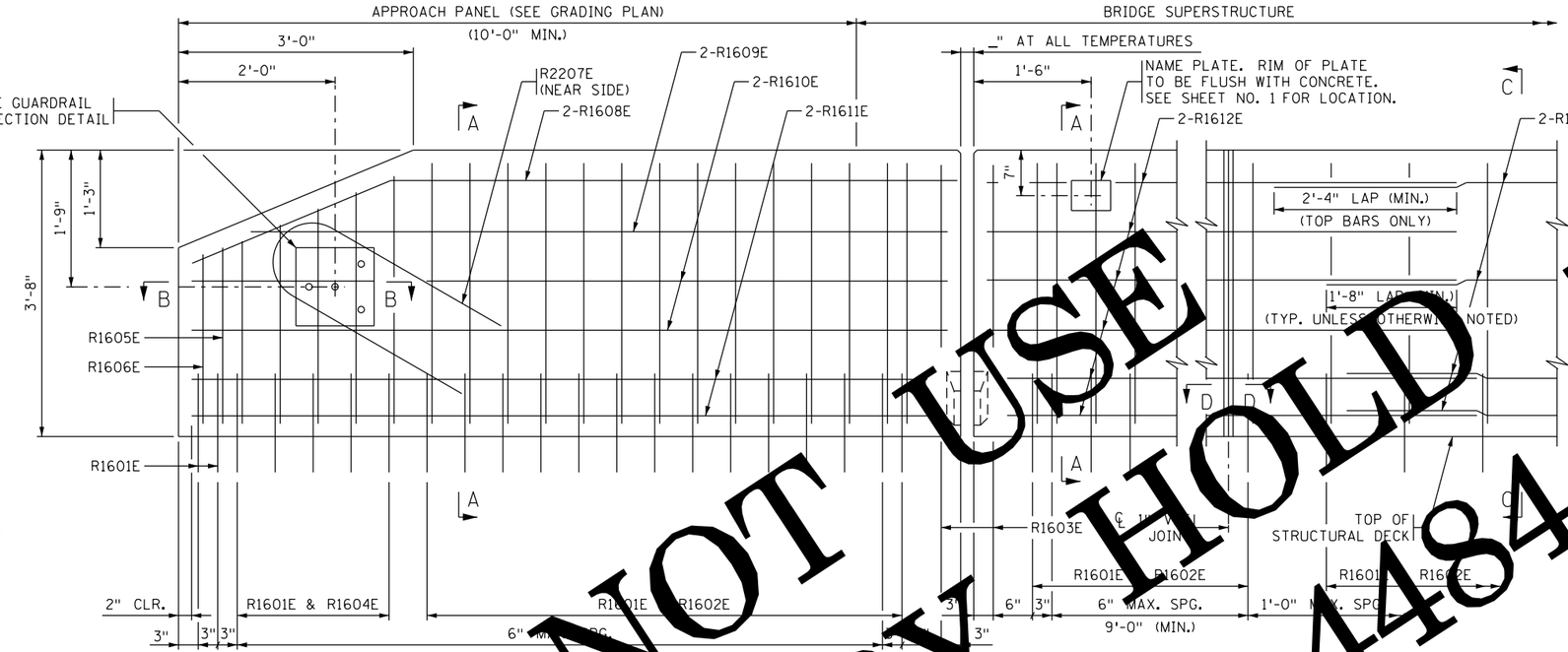

EXPANSION JOINT

EXPANSION DEVICE NOT SHOWN

INSIDE ELEVATION OF BARRIER

CONCRETE WEARING COURSE NOT SHOWN

BARRIER MEETS TEST LEVEL 5 REQUIREMENT OF NCHRP REPORT 350

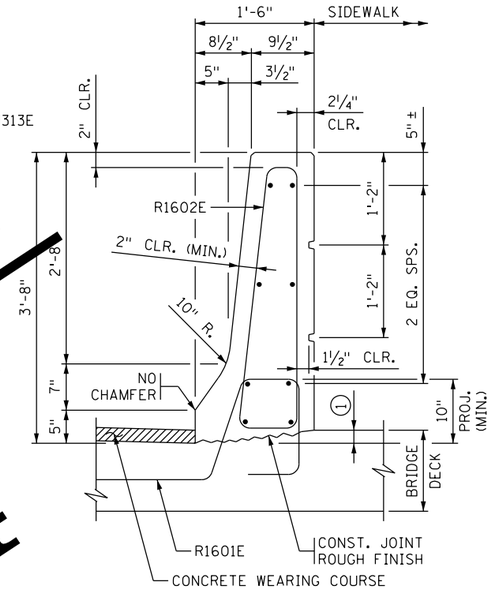

SECTION C-C

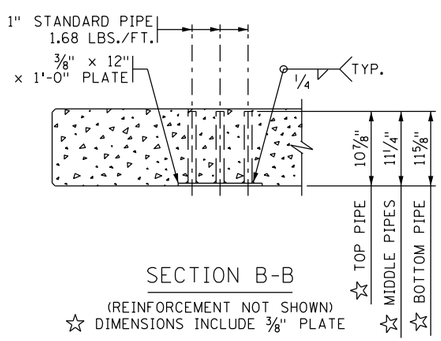

SECTION B-B

(REINFORCEMENT NOT SHOWN)

☆ DIMENSIONS INCLUDE ⅜" PLATE

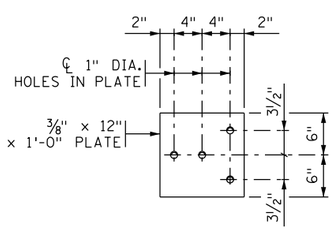

GUARDRAIL CONNECTION DETAIL

GALVANIZE AFTER FABRICATION PER Mn/DOT SPEC. 3394
ESTIMATED WEIGHT = 22 LBS

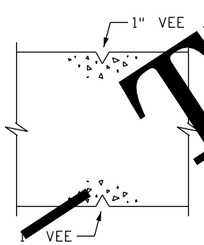

SECTION D-D

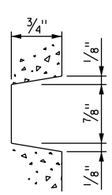

BARRIER RUSTICATION

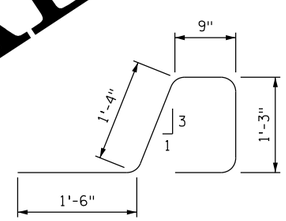

R1601E

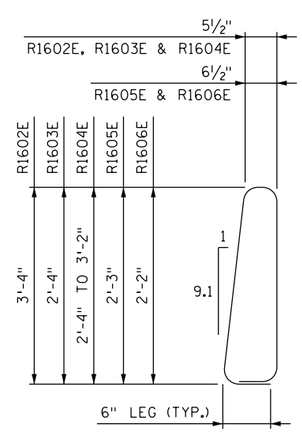

R1602E, R1603E, R1604E, R1605E & R1606E

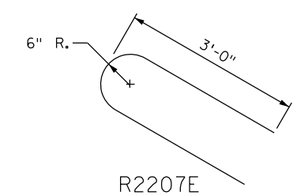

R2207E

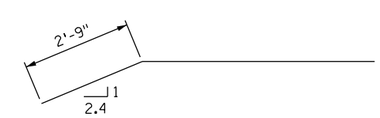

R1608E

BILL OF REINFORCEMENT FOR BARRIER

BAR	NO.	LENGTH	SHAPE	LOCATION
R1601E	___	5'-5"		BARRIER DOWEL
R1602E	___	8'-2"		BARRIER VERTICAL
R1603E	___	6'-2"		BARRIER VERTICAL
R1604E	_ SER. OF 5	6'-2" TO 7'-10"		BARRIER VERTICAL
R1605E	___	6'-1"		BARRIER VERTICAL
R1606E	___	5'-11"		BARRIER VERTICAL
R2207E	___	6'-6"		BARRIER VERTICAL
R1608E	___	_____		BARRIER LONGIT.
R1609E	___	_____		BARRIER LONGIT.
R1610E	___	_____		BARRIER LONGIT.
R1611E	___	_____		BARRIER LONGIT.
R1612E	___	12'-6"		BARRIER LONGIT.
R1313E	___	_____		BARRIER LONGIT.

GENERAL NOTES

LENGTH OF "TYPE F (TL-5) RAILING CONCRETE (3Y46 OR 3Y46A)" FOR PAYMENT SHALL BE MEASURED BETWEEN THE OUTSIDE FACES OF THE CONCRETE BARRIER.

CONCRETE BARRIER = 582 LBS./FT. (0.144 CU. YDS./FT.)

FINISH ALL EDGES OF BARRIER WITH ½" VEE, EXCEPT WHERE OTHERWISE NOTED.

MAXIMUM SPACING OF 1" VEE JOINTS SHALL BE 10 FT.

GUARDRAIL CONNECTION TO BE STRUCTURAL STEEL, Mn/DOT SPEC. 3306.

GUARDRAIL CONNECTION AND NAME PLATE TO BE CONSIDERED INCIDENTAL TO "TYPE F (TL-5) RAILING CONCRETE (3Y46 OR 3Y46A)".

BARRIER QUANTITIES ARE LISTED IN SUMMARY OF QUANTITIES FOR SUPERSTRUCTURE.

(1) DIMENSIONS TO BE DETERMINED BASED ON THE BRIDGE DECK SLOPE.

DO NOT USE
TEMPORARY HOLD
CALL (651) 366-4484

REVISED: 05-26-2006

APPROVED: JULY 25, 2005

STATE BRIDGE ENGINEER

CERTIFIED BY _____ LICENSED PROFESSIONAL ENGINEER _____ DATE

NAME: _____ LIC. NO. _____

TITLE: CONCRETE BARRIER (TYPE F, TL-5) WITH BRIDGE SLAB SIDEWALK AND INTEGRAL END POST (WITH CONC. WEARING COURSE)

DES: _____ DR: _____ CHK: _____ CHK: _____

SHEET NO. __ OF __ SHEETS

APPROVED:

FIG. 5-397.125

BRIDGE NO. _____

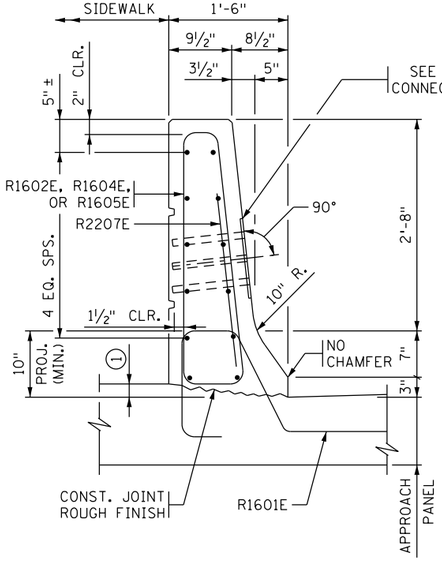

SECTION A-A

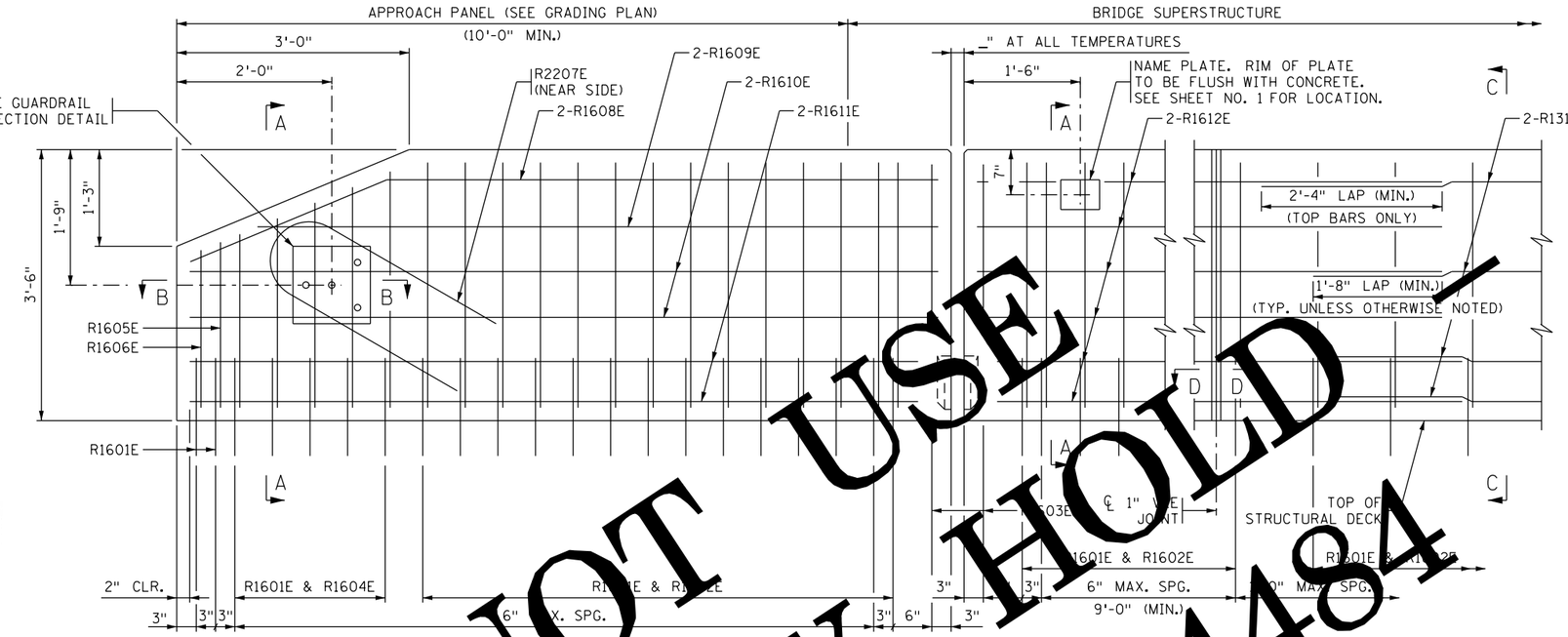

EXPANSION JOINT

EXPANSION DEVICE NOT SHOWN

INSIDE ELEVATION OF BARRIER

BARRIER MEETS TEST LEVEL 5 REQUIREMENTS OF NCHRP REPORT 350

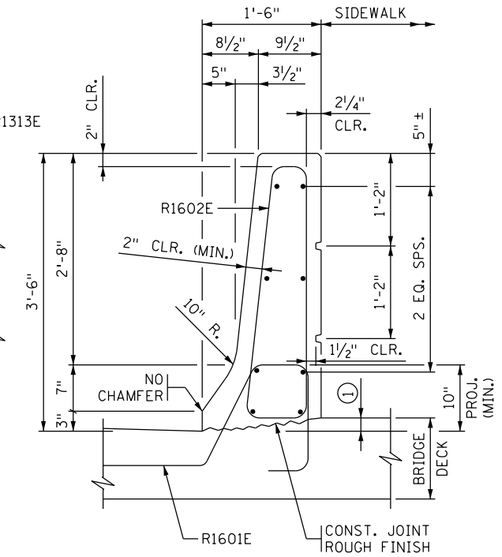

SECTION C-C

DESIGNER NOTES
(REMOVE PRIOR TO PLOTTING FINAL PLAN):
CHECK WITH ROAD DESIGNERS FOR SIGHT DISTANCE REQUIREMENTS.

COORDINATE BARRIER ON APPROACH PANEL WITH ROAD DESIGNERS.

CHECK BAR RIDDIE HAS 10" MIN. PROJECTION WHEN CROSS SLOPE VARIES FROM NORMAL 0.02 FT/FT.

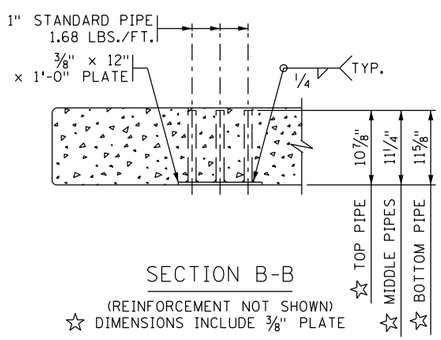

SECTION B-B

(REINFORCEMENT NOT SHOWN)
☆ DIMENSIONS INCLUDE ⅜" PLATE

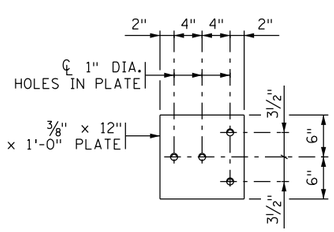

GUARDRAIL CONNECTION DETAIL

GALVANIZE AFTER FABRICATION PER Mn/DOT SPEC. 3394
ESTIMATED WEIGHT = 22 LBS

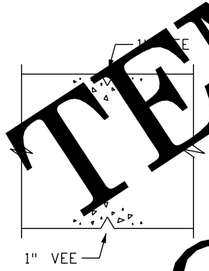

SECTION D-D

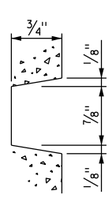

BARRIER RUSTICATION

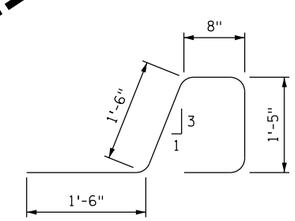

R1601E

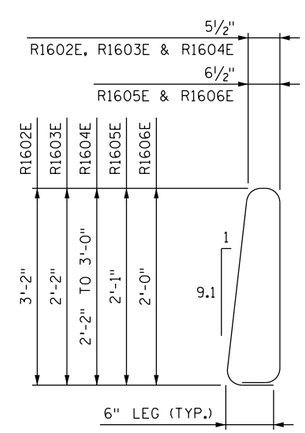

R1602E, R1603E, R1604E, R1605E & R1606E

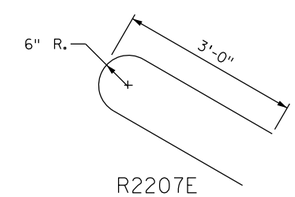

R2207E

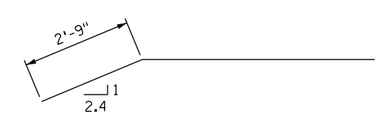

R1608E

BILL OF REINFORCEMENT FOR BARRIER

BAR	NO.	LENGTH	SHAPE	LOCATION
R1601E	___	5'-7"		BARRIER DOWEL
R1602E	___	7'-10"		BARRIER VERTICAL
R1603E	___	5'-10"		BARRIER VERTICAL
R1604E	_ SER. OF 5	5'-10" TO 7'-6"		BARRIER VERTICAL
R1605E	___	5'-9"		BARRIER VERTICAL
R1606E	___	5'-7"		BARRIER VERTICAL
R2207E	___	6'-6"		BARRIER VERTICAL
R1608E	___	_____		BARRIER LONGIT.
R1609E	___	_____		BARRIER LONGIT.
R1610E	___	_____		BARRIER LONGIT.
R1611E	___	_____		BARRIER LONGIT.
R1612E	___	12'-6"		BARRIER LONGIT.
R1313E	___	_____		BARRIER LONGIT.

GENERAL NOTES

LENGTH OF "TYPE F (TL-5) RAILING CONCRETE (3Y46 OR 3Y46A)" FOR PAYMENT SHALL BE MEASURED BETWEEN THE OUTSIDE FACES OF THE CONCRETE BARRIER.

CONCRETE BARRIER = 545 LBS./FT. (0.134 CU. YDS./FT.)

FINISH ALL EDGES OF BARRIER WITH ½" VEE, EXCEPT WHERE OTHERWISE NOTED.

MAXIMUM SPACING OF 1" VEE JOINTS SHALL BE 10 FT.

GUARDRAIL CONNECTION TO BE STRUCTURAL STEEL, Mn/DOT SPEC. 3306.

GUARDRAIL CONNECTION AND NAME PLATE TO BE CONSIDERED INCIDENTAL TO "TYPE F (TL-5) RAILING CONCRETE (3Y46 OR 3Y46A)".

BARRIER QUANTITIES ARE LISTED IN SUMMARY OF QUANTITIES FOR SUPERSTRUCTURE.

(1) DIMENSIONS TO BE DETERMINED BASED ON THE BRIDGE DECK SLOPE.

DO NOT USE
TEMPORARY HOLD
CALL (651) 366-4484

REVISED: 05-26-2006

APPROVED: JULY 25, 2005

STATE BRIDGE ENGINEER

CERTIFIED BY _____ LICENSED PROFESSIONAL ENGINEER _____ DATE

NAME: _____ LIC. NO. _____

TITLE: CONCRETE BARRIER (TYPE F, TL-5) WITH BRIDGE SLAB SIDEWALK AND INTEGRAL END POST (WITHOUT CONC. WEARING COURSE)

DES: _____ DR: _____ CHK: _____ CHK: _____

SHEET NO. __ OF __ SHEETS

FIG. 5-397.126

APPROVED:

BRIDGE NO. _____

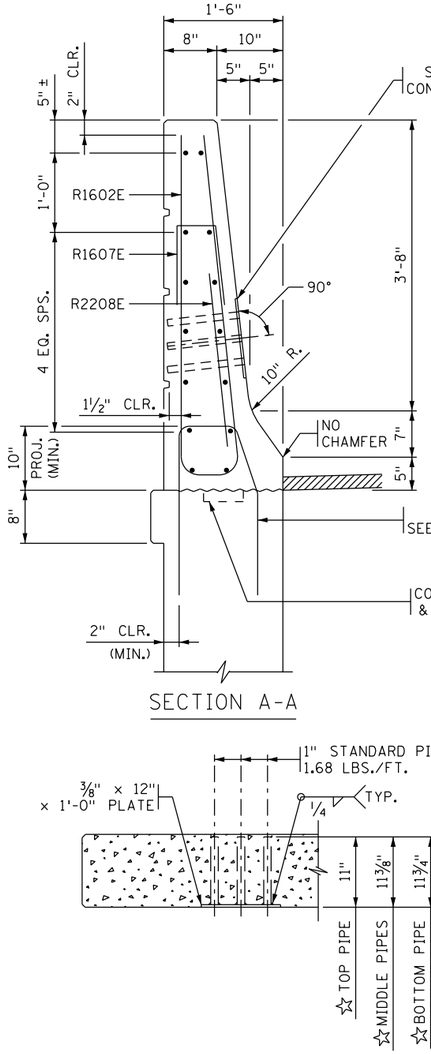

SECTION A-A

SECTION B-B

GUARDRAIL CONNECTION DETAIL

GALVANIZE AFTER FABRICATION PER Mn/DOT SPEC. 3394
ESTIMATED WEIGHT = 22 LBS

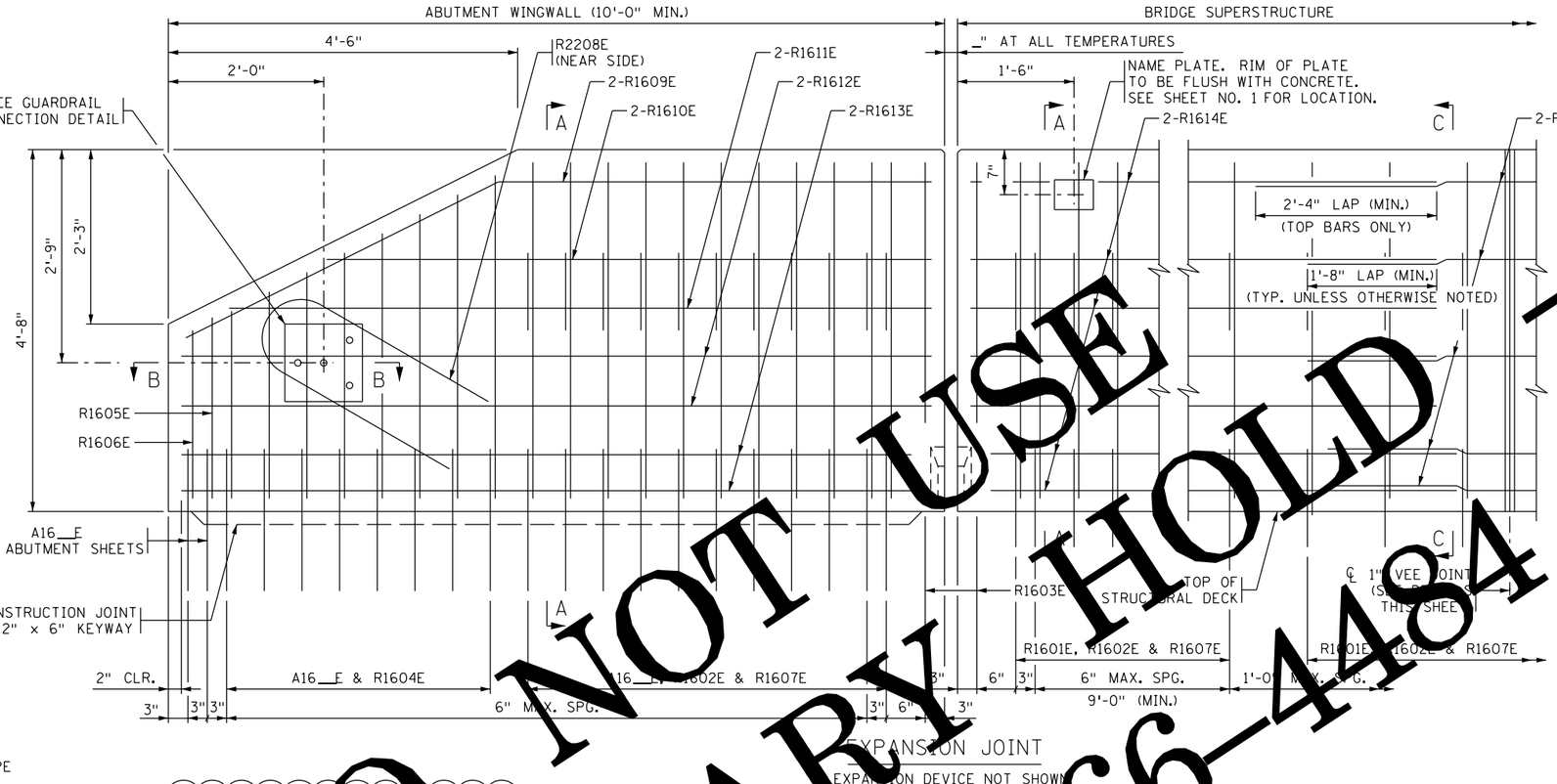

DESIGNER NOTES
(REMOVE PRIOR TO SUBMITTING FINAL PLAN):
CHECK WITH ROADWAY DESIGNERS FOR SIGHT DISTANCE REQUIREMENTS.

VERIFY BAR RIGGIE HAS 10" MIN. PROJECTION WHEN CROSS SLOPE VARIES FROM NORMAL 0.02 FT/FT.

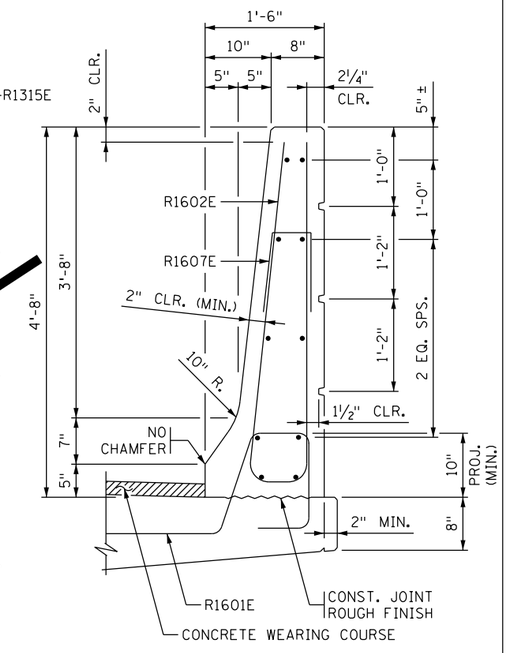

SECTION C-C

BILL OF REINFORCEMENT FOR BARRIER				
BAR	NO.	LENGTH	SHAPE	LOCATION
R1601E	___	5'-5"		BARRIER DOWEL
R1602E	___	9'-5"		BARRIER VERTICAL
R1603E	___	7'-5"		BARRIER VERTICAL
R1604E	___ SER. OF 8	5'-3" TO 8'-9"		BARRIER VERTICAL
R1605E	___	5'-4"		BARRIER VERTICAL
R1606E	___	5'-2"		BARRIER VERTICAL
R1607E	___	2'-6"		BARRIER TIE
R2208E	___	6'-6"		BARRIER VERTICAL
R1609E	___	_____		BARRIER LONGIT.
R1610E	___	_____		BARRIER LONGIT.
R1611E	___	_____		BARRIER LONGIT.
R1612E	___	_____		BARRIER LONGIT.
R1613E	___	_____		BARRIER LONGIT.
R1614E	___	12'-6"		BARRIER LONGIT.
R1315E	___	_____		BARRIER LONGIT.

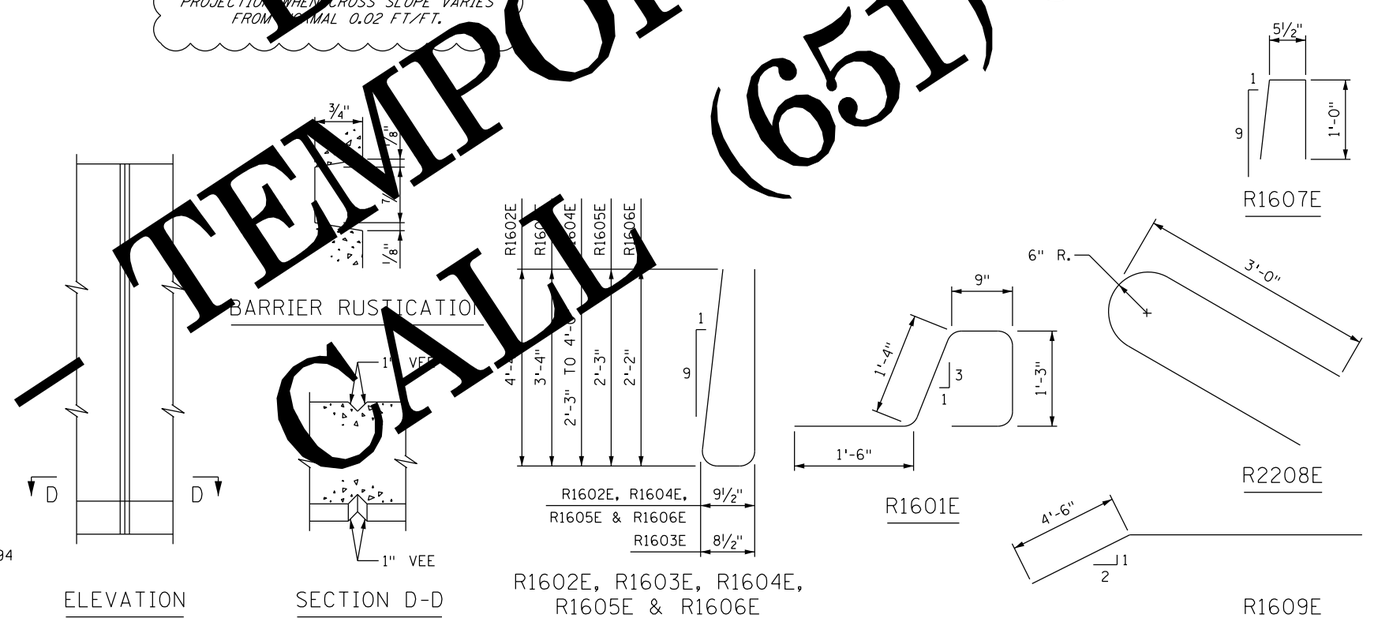

ELEVATION

SECTION D-D

R1602E, R1603E, R1604E, R1605E & R1606E

VEE JOINT DETAILS

GENERAL NOTES

LENGTH OF "TYPE F (TL-5) WITH GLARE SCREEN RAILING CONCRETE (3Y46 OR 3Y46A)" FOR PAYMENT SHALL BE MEASURED BETWEEN THE OUTSIDE FACES OF THE CONCRETE BARRIER.

CONCRETE BARRIER = 670 LBS./FT. (0.165 CU. YDS./FT.)

FINISH ALL EDGES OF BARRIER WITH ½" VEE, EXCEPT WHERE OTHERWISE NOTED.

MAXIMUM SPACING OF 1" VEE JOINTS SHALL BE 10 FT.

GUARDRAIL CONNECTION TO BE STRUCTURAL STEEL, Mn/DOT SPEC. 3306.

GUARDRAIL CONNECTION AND NAME PLATE TO BE CONSIDERED INCIDENTAL TO "TYPE F (TL-5) WITH GLARE SCREEN RAILING CONCRETE (3Y46 OR 3Y46A)".

BARRIER QUANTITIES ARE LISTED IN SUMMARY OF QUANTITIES FOR SUPERSTRUCTURE.

DO NOT USE — TEMPORARY HOLD — CALL (651) 366-4484

REVISED:

APPROVED: JUNE 14, 2006
Daniel L. Dorgan
STATE BRIDGE ENGINEER

CERTIFIED BY _____ LICENSED PROFESSIONAL ENGINEER _____ DATE
NAME: _____ LIC. NO. _____

TITLE: CONCRETE BARRIER (TYPE F, TL-5) WITH GLARE SCREEN AND INTEGRAL END POST (WITH CONC. WEARING COURSE)

DES: _____ DR: _____
CHK: _____ CHK: _____
SHEET NO. __ OF __ SHEETS

FIG. 5-397.128

APPROVED:

BRIDGE NO. _____

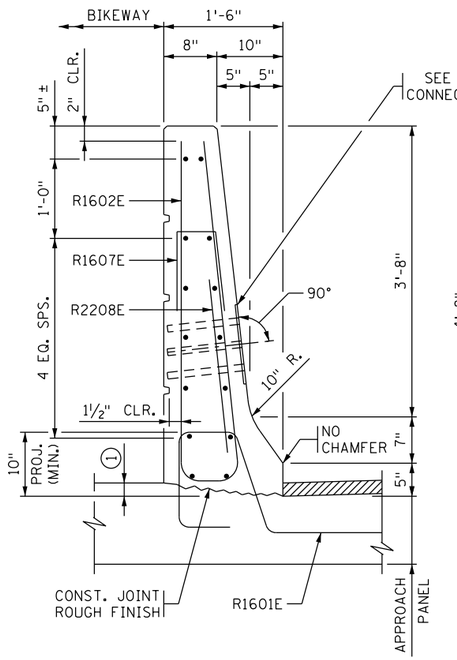

SECTION A-A

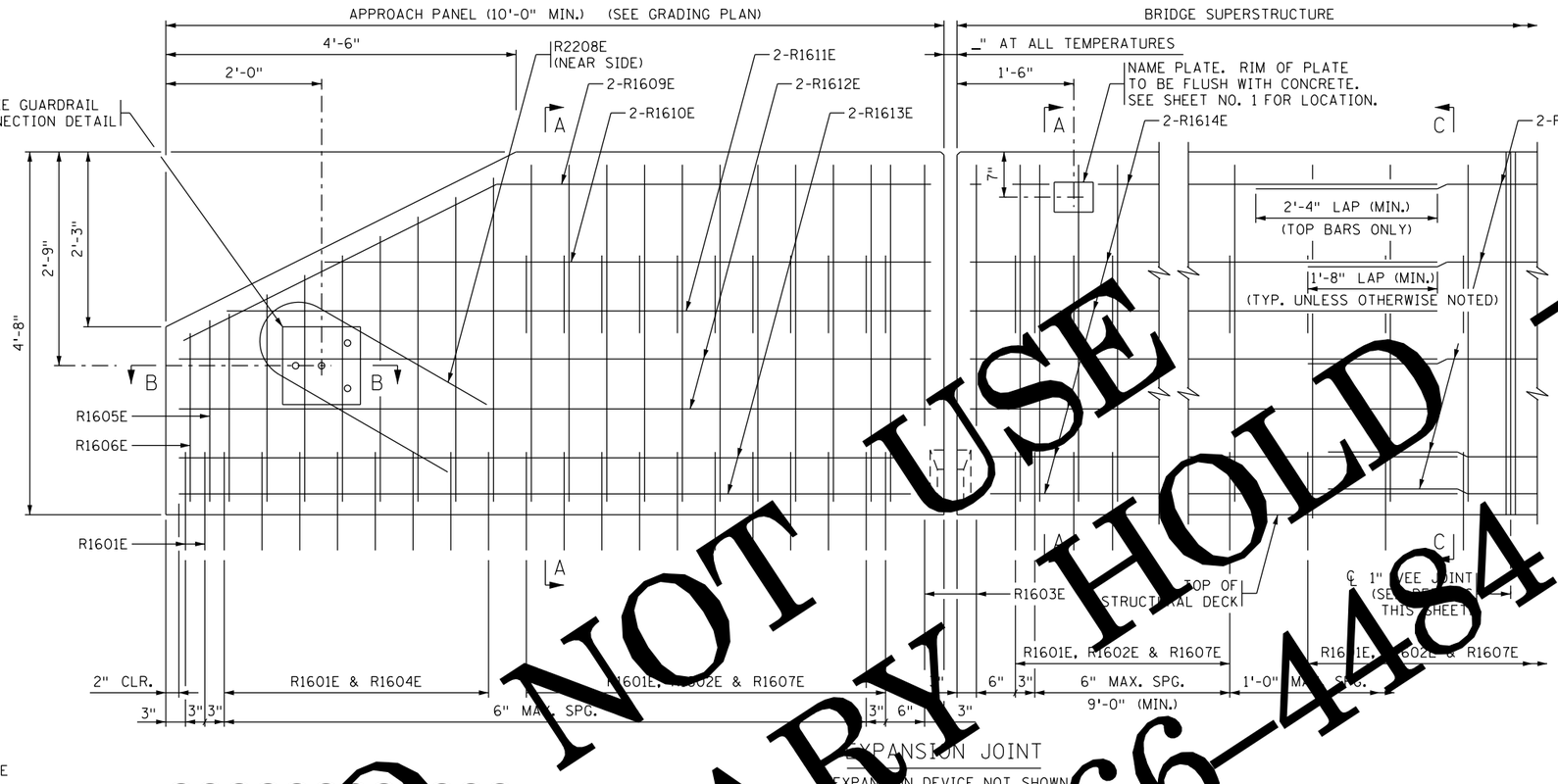

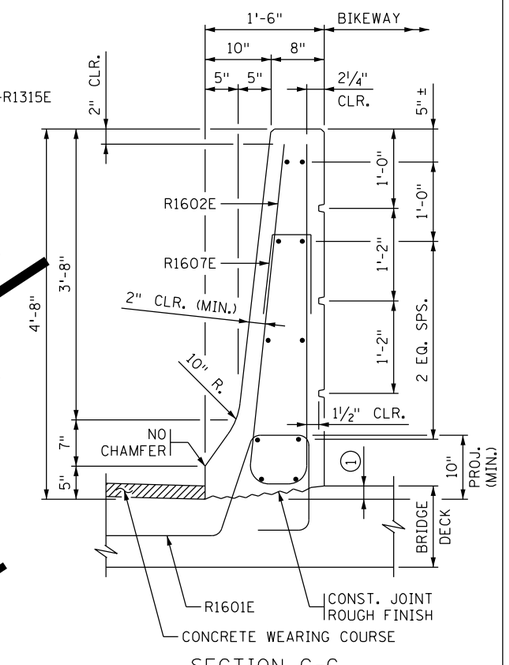

SECTION C-C

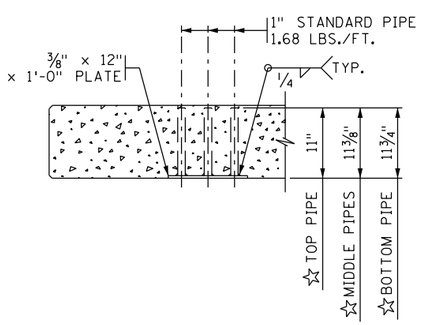

SECTION B-B

(REINFORCEMENT NOT SHOWN)
☆ DIMENSIONS INCLUDE ⅜" PLATE

DESIGN NOTES
(REMOVE PRIOR TO PLACING FINAL PLAN):
CHECK WITH ROADWAY DESIGNERS FOR SIGHT DISTANCE REQUIREMENTS.

VERIFY THAT R1601E HAS 10" MIN. PROJECTION WHEN CROSS SLOPE VARIES FROM NORMAL 0.02 FT/FT.

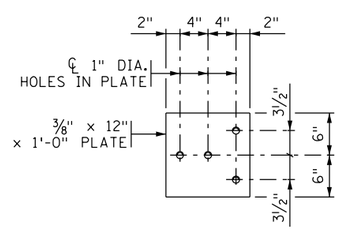

GUARDRAIL CONNECTION DETAIL

GALVANIZE AFTER FABRICATION PER Mn/DOT SPEC. 3394
ESTIMATED WEIGHT = 22 LBS

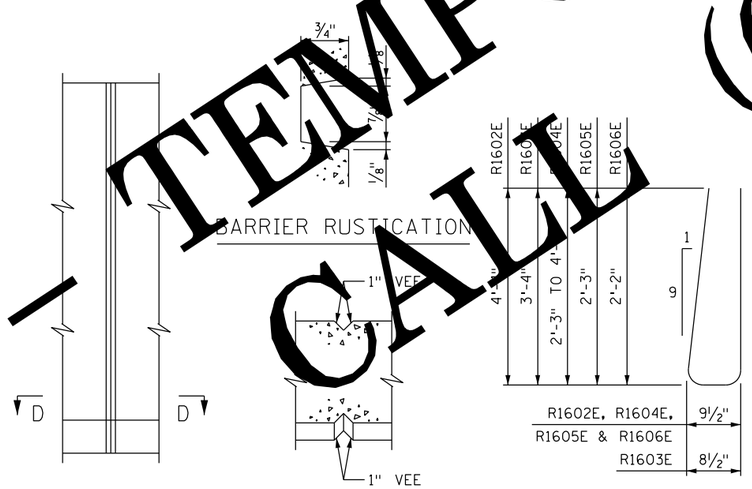

ELEVATION

SECTION D-D

R1602E, R1603E, R1604E, R1605E & R1606E

VEE JOINT DETAILS

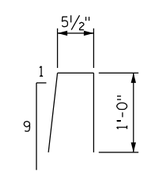

R1607E

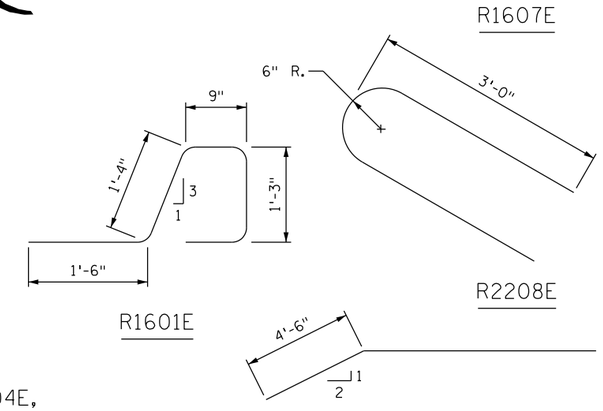

R1601E

R2208E

R1609E

BILL OF REINFORCEMENT FOR BARRIER

BAR	NO.	LENGTH	SHAPE	LOCATION
R1601E	___	5'-5"		BARRIER DOWEL
R1602E	___	9'-5"		BARRIER VERTICAL
R1603E	___	7'-5"		BARRIER VERTICAL
R1604E	___ SER. OF 8	5'-3" TO 8'-9"		BARRIER VERTICAL
R1605E	___	5'-4"		BARRIER VERTICAL
R1606E	___	5'-2"		BARRIER VERTICAL
R1607E	___	2'-6"		BARRIER TIE
R2208E	___	6'-6"		BARRIER VERTICAL
R1609E	___	_____		BARRIER LONGIT.
R1610E	___	_____		BARRIER LONGIT.
R1611E	___	_____		BARRIER LONGIT.
R1612E	___	_____		BARRIER LONGIT.
R1613E	___	_____		BARRIER LONGIT.
R1614E	___	12'-6"		BARRIER LONGIT.
R1315E	___	_____		BARRIER LONGIT.

GENERAL NOTES

LENGTH OF "TYPE F (TL-5) WITH BIKEWAY RAILING CONCRETE (3Y46 OR 3Y46A)" FOR PAYMENT SHALL BE MEASURED BETWEEN THE OUTSIDE FACES OF THE CONCRETE BARRIER.

CONCRETE BARRIER = 670 LBS./FT. (0.165 CU. YDS./FT.)

FINISH ALL EDGES OF BARRIER WITH ½" VEE, EXCEPT WHERE OTHERWISE NOTED.

MAXIMUM SPACING OF 1" VEE JOINTS SHALL BE 10 FT.

GUARDRAIL CONNECTION TO BE STRUCTURAL STEEL, Mn/DOT SPEC. 3306.

GUARDRAIL CONNECTION AND NAME PLATE TO BE CONSIDERED INCIDENTAL TO "TYPE F (TL-5) WITH BIKEWAY RAILING CONCRETE (3Y46 OR 3Y46A)".

BARRIER QUANTITIES ARE LISTED IN SUMMARY OF QUANTITIES FOR SUPERSTRUCTURE.

① DIMENSIONS TO BE DETERMINED BASED ON THE BRIDGE DECK SLOPE.

DO NOT USE
TEMPORARY HOLD
CALL (651) 366-4484

REVISED:

APPROVED: JUNE 14, 2006
Daniel L. Dorgan
STATE BRIDGE ENGINEER

CERTIFIED BY _____ LICENSED PROFESSIONAL ENGINEER _____ DATE
NAME: _____ LIC. NO. _____

TITLE: CONCRETE BARRIER (TYPE F, TL-5)
WITH BIKEWAY AND INTEGRAL END POST
(WITH CONC. WEARING COURSE)

DES: _____ DR: _____
CHK: _____ CHK: _____
SHEET NO. __ OF __ SHEETS

APPROVED:

FIG. 5-397.129

BRIDGE NO. _____

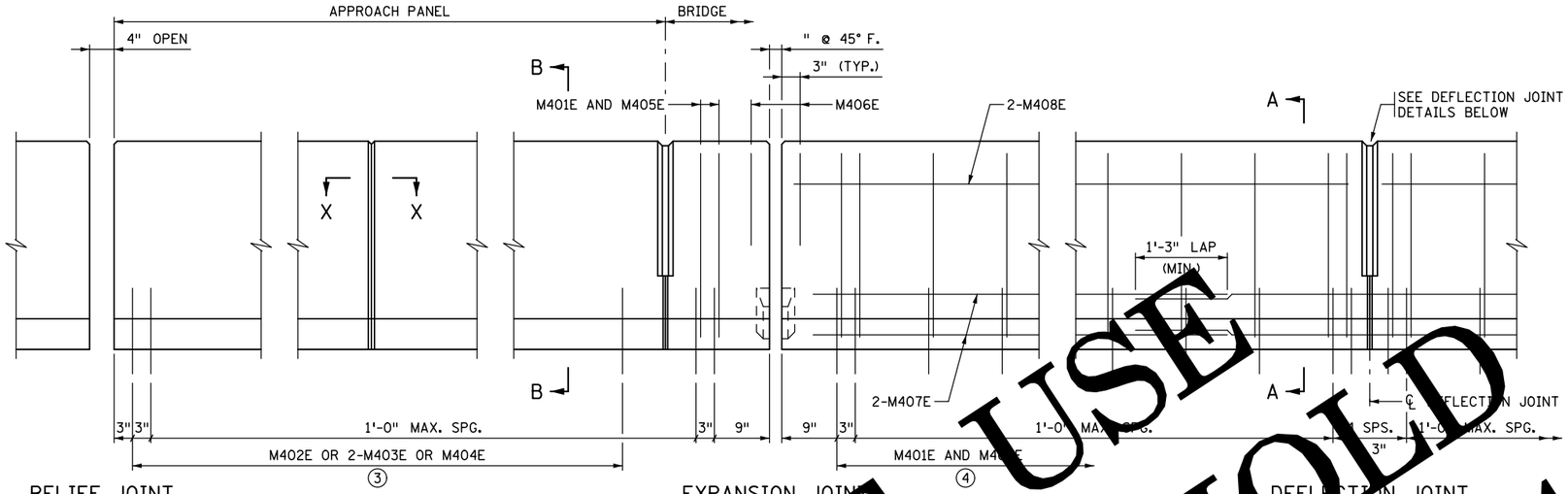

RELIEF JOINT

EXPANSION JOINT

EXPANSION DEVICE NOT SHOWN

DEFLECTION JOINT

INSIDE ELEVATION OF BARRIER

WEARING COURSE NOT SHOWN
(REINFORCED BARRIER SHOWN)

RAIL MEETS TEST LEVEL 4 REQUIREMENTS OF NCHRP REPORT 350

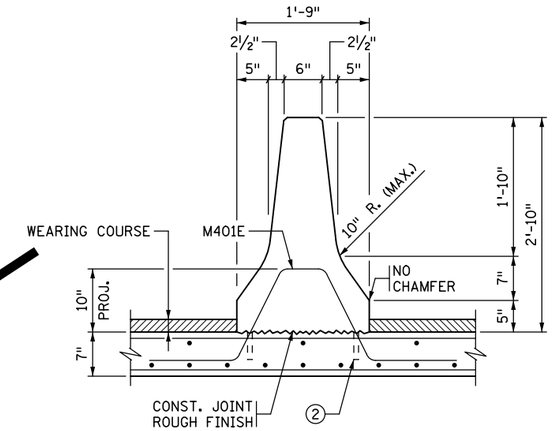

SECTION A-A

NON-REINFORCED BARRIER

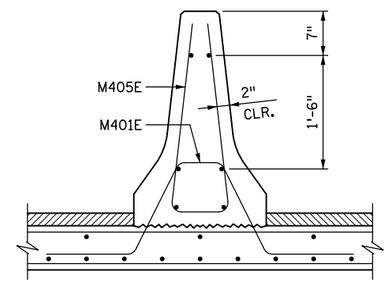

SECTION A-A

REINFORCED BARRIER

④

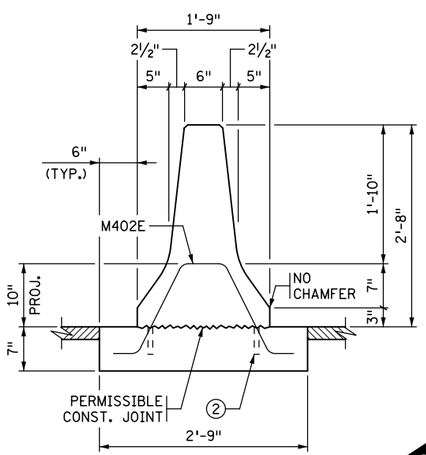

SECTION B-B

BITUMINOUS ADJ. SHOULDERS

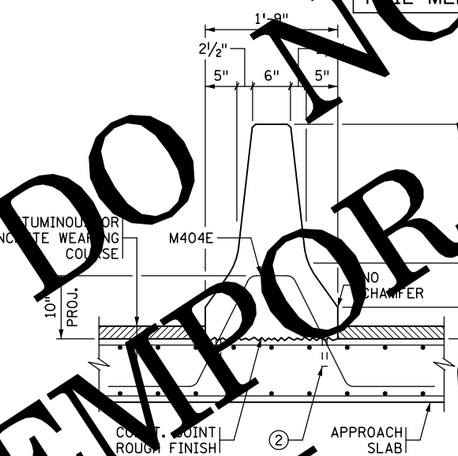

SECTION B-B

WEARING COURSE ON APPROACH ROADWAY

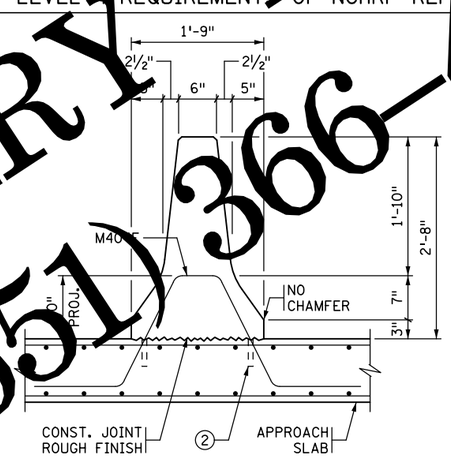

SECTION B-B

CONCRETE APPROACH ROADWAY

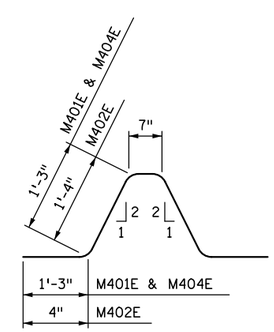

M401E, M402E & M404E

GENERAL NOTES

CONCRETE BARRIER SHALL BE CONC. MIX 3Y46 OR 3Y46A. CONCRETE BARRIER = 422 LBS./FT. (0.104 CU. YDS/FT.)

FINISH ALL EDGES OF BARRIER WITH ½" VEE EXCEPT WHERE OTHERWISE NOTED.

MAXIMUM SPACING OF CONCRETE DEFLECTION JOINTS SHALL BE 20 FT.

SEE SUPERSTRUCTURE SHEET FOR JOINT SPACING.

BARRIER QUANTITIES ARE INCLUDED IN SUMMARY OF QUANTITIES FOR SUPERSTRUCTURE.

① USE 2-M403E AS AN ALTERNATE FOR M402E OR M404E.

② DRILLED HOLE FOR GROUTED ALTERNATE M403E.

③ INCLUDED IF APPROACH PANEL IS PART OF BRIDGE PLAN.

④ USE REINFORCED BARRIER WHEN BARRIER IS SUBJECTED TO STAGE CONSTRUCTION TRAFFIC.

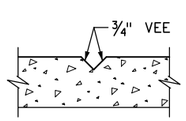

SECTION X-X

JOINT ALIGNED WITH TRANSVERSE JOINT IN APPROACH PANEL

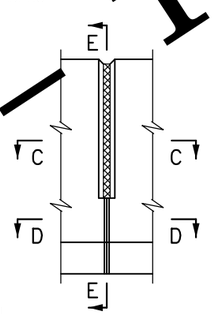

ELEVATION

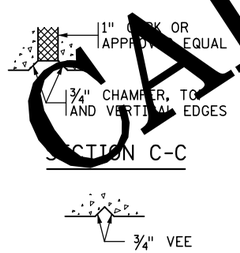

SECTION C-C

SECTION D-D

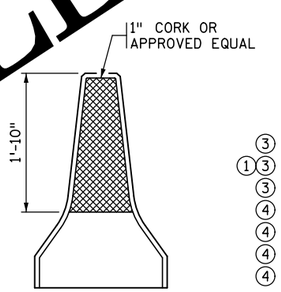

SECTION E-E

DEFLECTION JOINT DETAILS

BILL OF REINFORCEMENT FOR BARRIER

	BAR	NO.	LENGTH	SHAPE	LOCATION
	M401E		5'-7"		BARRIER DOWEL
③	M402E		3'-11"		BARRIER VERTICAL
①③	M403E		2'-0"		BARRIER VERTICAL
③	M404E		5'-7"		BARRIER DOWEL
④	M405E		5'-8"		BARRIER DOWEL
④	M406E		3'-0"		BARRIER DOWEL
④	M407E				BARRIER LONGITUDINAL
④	M408E				BARRIER LONGITUDINAL

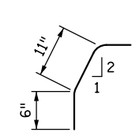

M403E

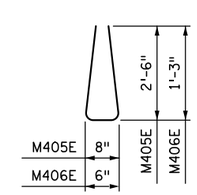

M405E & M406E

DO NOT USE
TEMPORARY HOLD
CALL (651) 366-4484

REVISED: 04-17-2013

APPROVED: DECEMBER 18, 2003

STATE BRIDGE ENGINEER

T.HOLD 05-03-2016

CERTIFIED BY _____ LICENSED PROFESSIONAL ENGINEER _____ DATE

NAME: LIC. NO.

TITLE: SOLID MEDIAN BARRIER
TYPE F
(WITH WEARING COURSE)

DES: DR: CHK: CHK:

SHEET NO. OF SHEETS

APPROVED:

BRIDGE NO.

FIG. 5-397.130

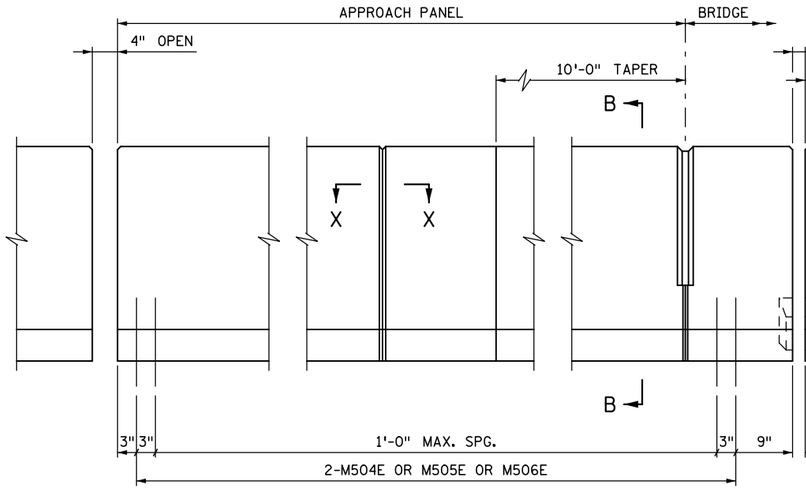

RELIEF JOINT

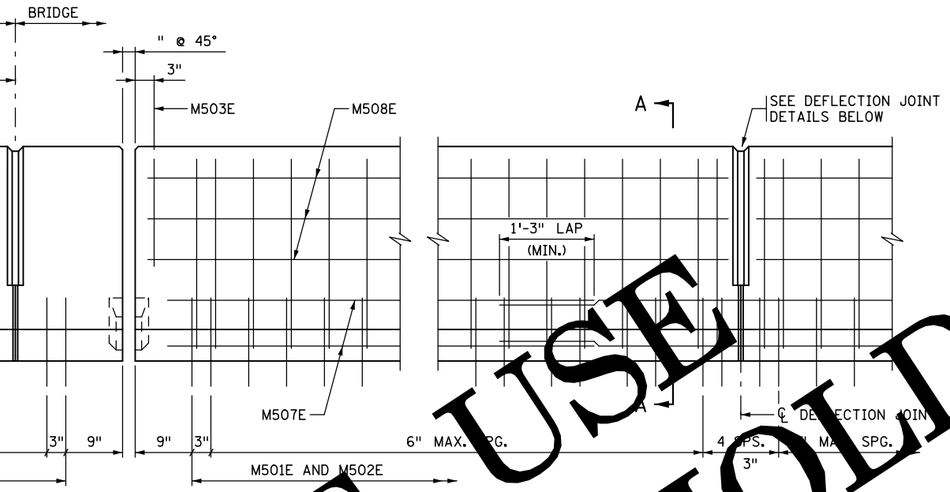

EXPANSION JOINT

EXPANSION DEVICE NOT SHOWN

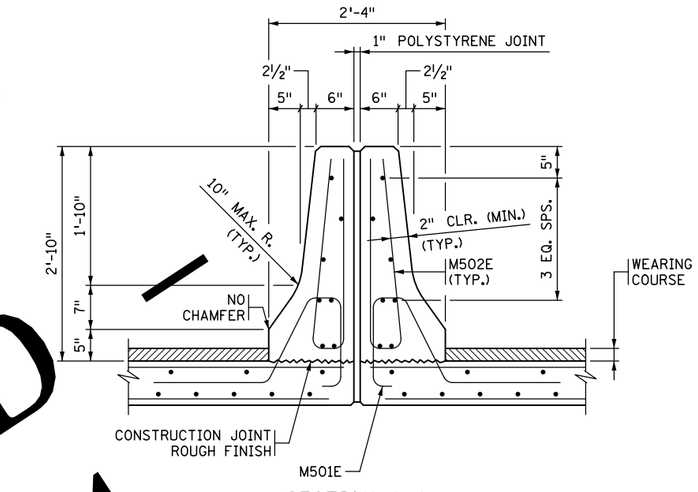

SECTION A-A

INSIDE ELEVATION OF BARRIER

WEARING COURSE NOT SHOWN

RAIL MEETS TEST LEVEL 4 REQUIREMENTS OF NCHRP REPORT 350.

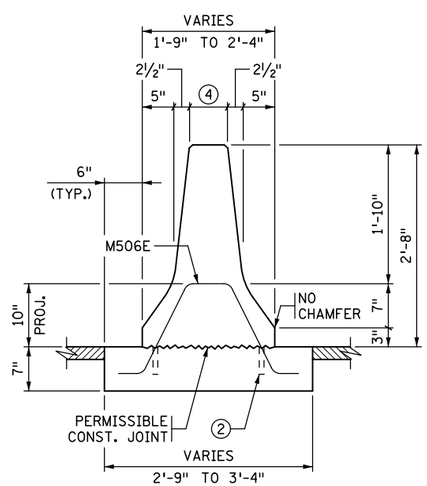

SECTION B-B

BITUMINOUS ADJ. SHOULDERS

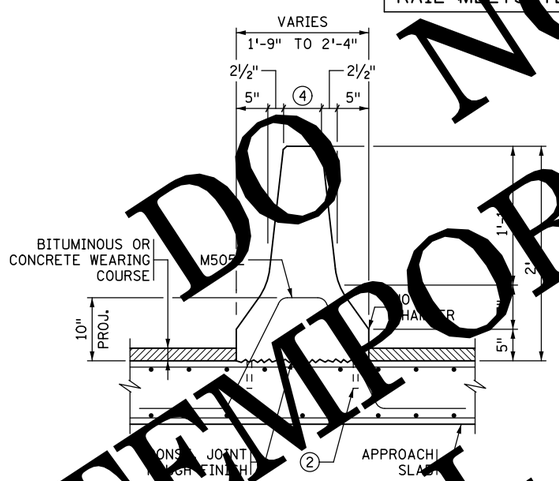

SECTION B-B

WEARING COURSE ON APPROACH ROADWAY

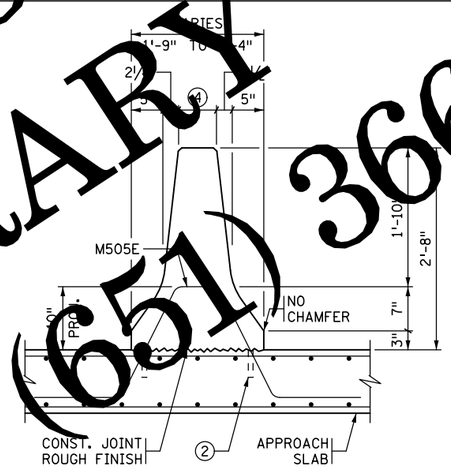

SECTION B-B

CONCRETE APPROACH ROADWAY

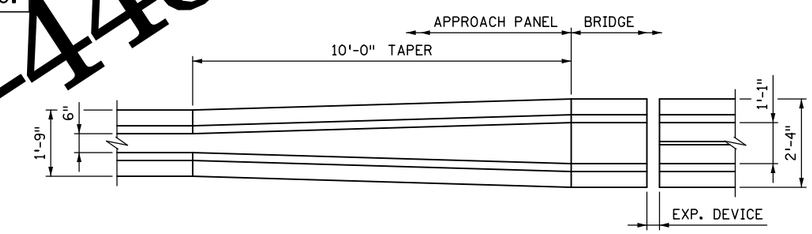

PLAN VIEW OF APPROACH BARRIER

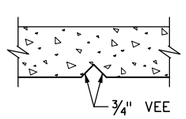

SECTION X-X

JOINT ALIGNED WITH TRANSVERSE JOINT IN APPROACH PANEL

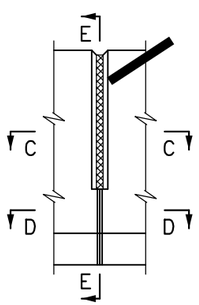

ELEVATION

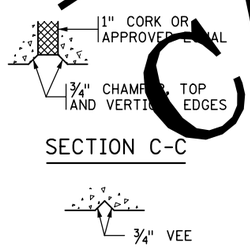

SECTION C-C

SECTION D-D

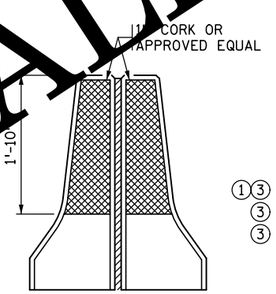

SECTION E-E

DEFLECTION JOINT DETAILS

	BILL OF REINFORCEMENT FOR BARRIER				
	BAR	NO.	LENGTH	SHAPE	LOCATION
	M501E		4'-7"		BARRIER DOWEL
	M502E		5'-5"		BARRIER VERTICAL
	M503E		3'-2"		BARRIER VERTICAL
	M504E		2'-2"		BARRIER DOWEL
1 3	M505E		6'-2"		BARRIER DOWEL
3	M506E		3'-9"		BARRIER DOWEL
	M507E				BARRIER LONGITUDINAL
	M508E				BARRIER LONGITUDINAL

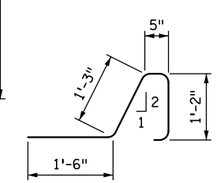

M501E

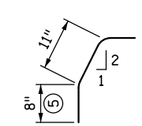

M504E

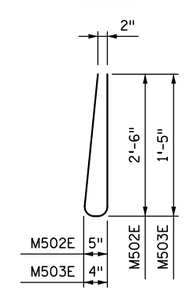

M502E & M503E

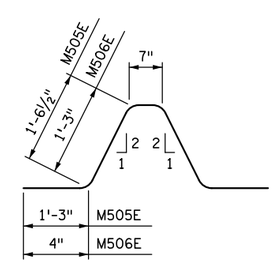

M505E & M506E

GENERAL NOTES

CONCRETE BARRIER SHALL BE CONC. MIX 3Y46 OR 3Y46A. CONCRETE BARRIER = 634 LBS./FT. (0.157 CU. YDS/FT.)

FINISH ALL EDGES OF BARRIER WITH ½" VEE EXCEPT WHERE OTHERWISE NOTED.

MAXIMUM SPACING OF CONCRETE DEFLECTION JOINTS SHALL BE 20 FT.

SEE SUPERSTRUCTURE SHEET FOR JOINT SPACING.

BARRIER QUANTITIES ARE INCLUDED IN SUMMARY OF QUANTITIES FOR SUPERSTRUCTURE.

1. USE 2-M504E AS AN ALTERNATE FOR M505E OR M506E.
2. DRILLED HOLE FOR GROUTED ALTERNATE M504E.
3. INCLUDED IF APPROACH PANEL IS PART OF BRIDGE PLAN.
4. VARIES FROM 6" AT THE START OF TAPER TO 1'-1" AT THE END OF THE BRIDGE.
5. BASED ON 10" SLAB.

DO NOT USE — TEMPORARY HOLD
CALL (651) 366-4484

T.HOLD 05-03-2016

REVISED: 04-17-2013

APPROVED: OCTOBER 29, 2004

STATE BRIDGE ENGINEER

CERTIFIED BY _____ LICENSED PROFESSIONAL ENGINEER _____ DATE

NAME: LIC. NO.

TITLE: SPLIT MEDIAN BARRIER
TYPE F
(WITH WEARING COURSE)

DES: DR: CHK: CHK:

SHEET NO. OF SHEETS

FIG. 5-397.131

APPROVED:

BRIDGE NO.

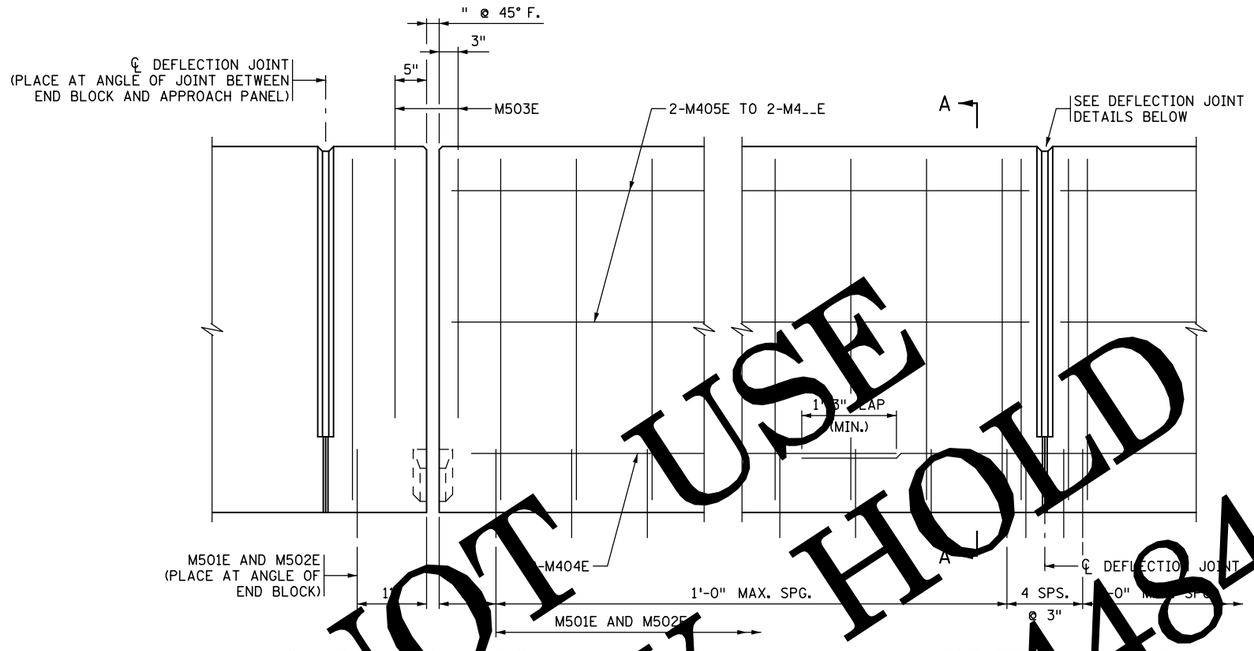

EXPANSION JOINT

EXPANSION DEVICE NOT SHOWN

DEFLECTION JOINT

INSIDE ELEVATION OF BARRIER

WEARING COURSE NOT SHOWN

RAIL MEETS TEST LEVEL 4 REQUIREMENTS OF NCHRP REPORT 350.

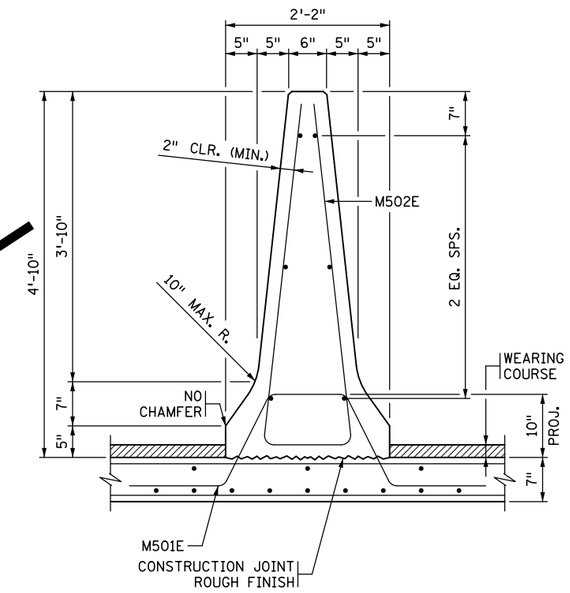

SECTION A-A

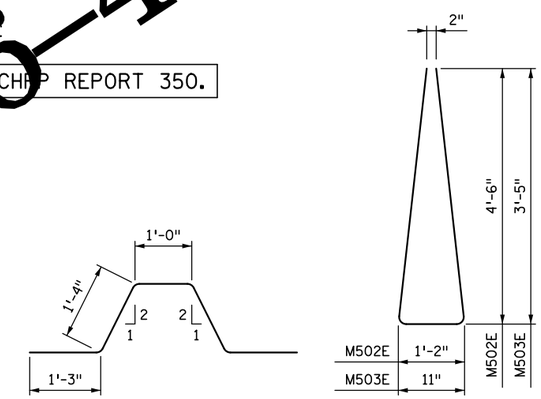

M501E

M502E & M503E

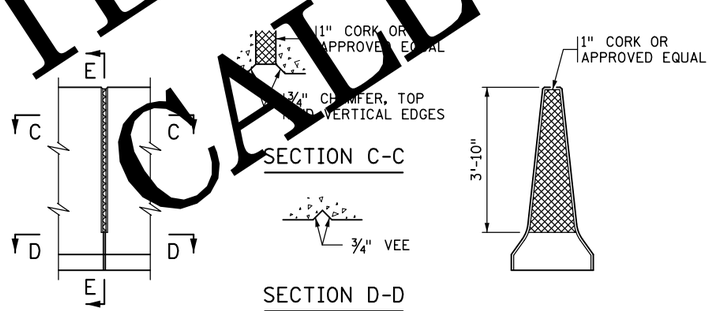

SECTION C-C

SECTION D-D

ELEVATION

SECTION E-E

DEFLECTION JOINT DETAILS

BILL OF REINFORCEMENT FOR BARRIER				
BAR	NO.	LENGTH	SHAPE	LOCATION
M501E		4'-11"		BARRIER DOWEL
M502E		9'-8"		BARRIER VERTICAL
M503E		7'-4"		BARRIER VERTICAL
M404E				BARRIER LONGITUDINAL
M405E				BARRIER LONGITUDINAL

GENERAL NOTES

CONCRETE BARRIER SHALL BE CONC. MIX 3Y46 OR 3Y46A. CONCRETE BARRIER = 817 LBS./FT. (0.202 CU. YDS/FT.)

FINISH ALL EDGES OF BARRIER WITH 1/2" VEE EXCEPT WHERE OTHERWISE NOTED.

MAXIMUM SPACING OF CONCRETE DEFLECTION JOINTS SHALL BE 20 FT.

SEE SUPERSTRUCTURE SHEET FOR JOINT SPACING.

BARRIER QUANTITIES ARE INCLUDED IN SUMMARY OF QUANTITIES FOR SUPERSTRUCTURE.

(1) USE REINFORCEMENT IN BARRIER WHEN BARRIER IS SUBJECTED TO STAGE CONSTRUCTION TRAFFIC.

DO NOT USE
– TEMPORARY HOLD –
CALL (651) 366-4484

REVISED: 04-17-2013

APPROVED: DECEMBER 18, 2003

STATE BRIDGE ENGINEER

T.HOLD 07-12-2017

CERTIFIED BY _____ LICENSED PROFESSIONAL ENGINEER _____ DATE

NAME: LIC. NO.

TITLE: SOLID MEDIAN BARRIER AND GLARE SCREEN

TYPE F (WITH CONCRETE WEARING COURSE)

DES: DR: CHK: CHK:

SHEET NO. OF SHEETS

APPROVED:

FIG. 5-397.132

BRIDGE NO.

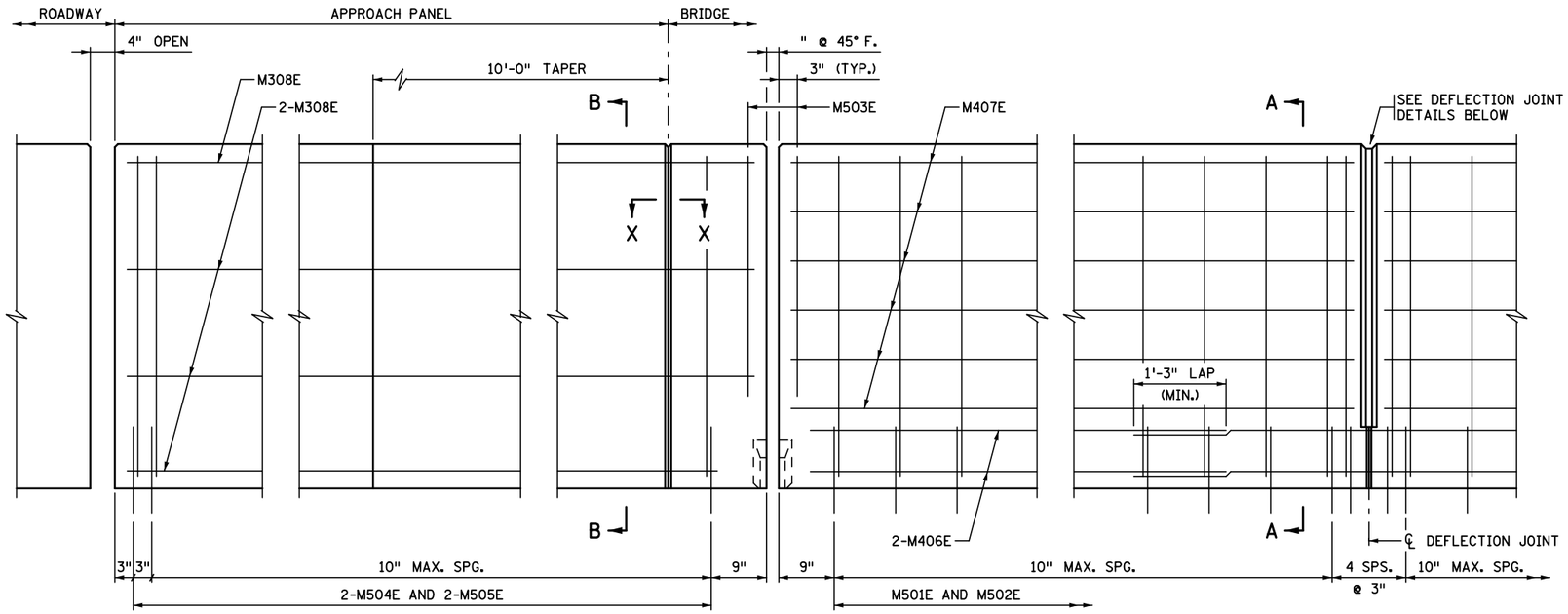

RELIEF JOINT

EXPANSION JOINT

EXPANSION DEVICE NOT SHOWN

DEFLECTION JOINT

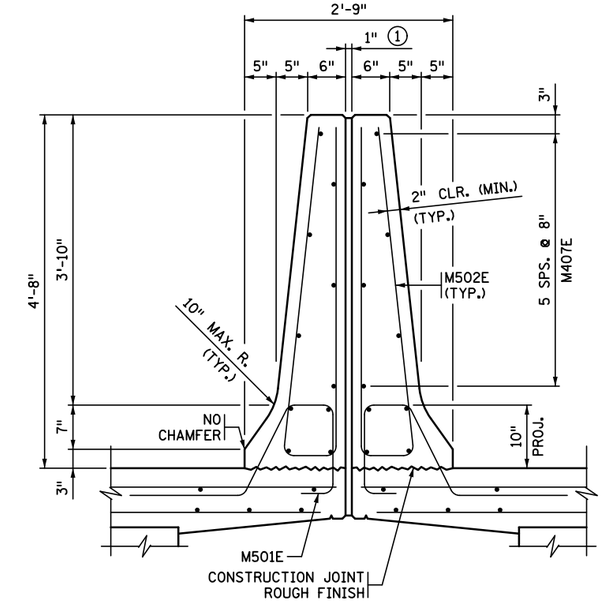

SECTION A-A

INSIDE ELEVATION OF BARRIER

RAIL MEETS TEST LEVEL 4 REQUIREMENTS OF NCHRP REPORT 350.

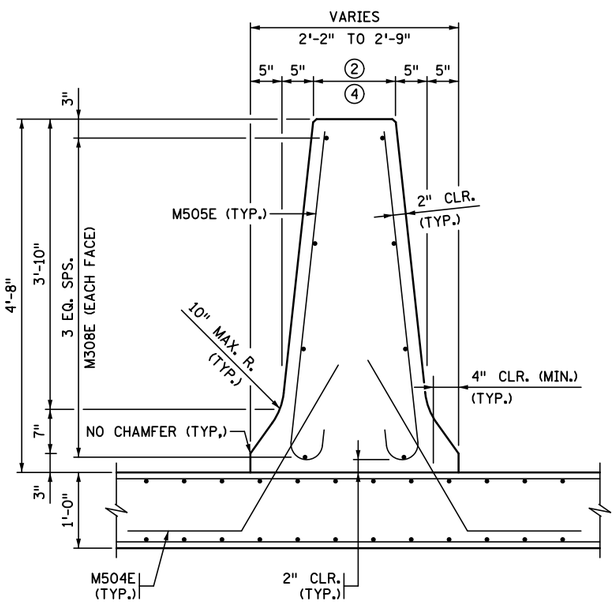

SECTION B-B

CONCRETE APPROACH PANEL

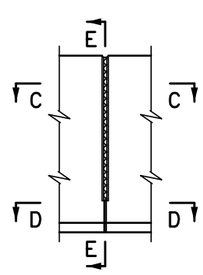

ELEVATION

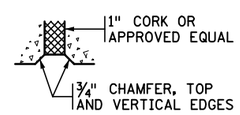

SECTION C-C

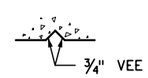

SECTION D-D

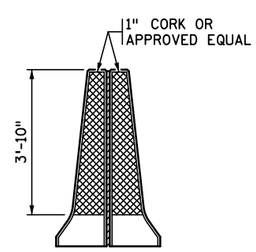

SECTION E-E

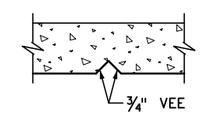

SECTION X-X

APPROACH PANEL JOINT ③

DEFLECTION JOINT DETAILS

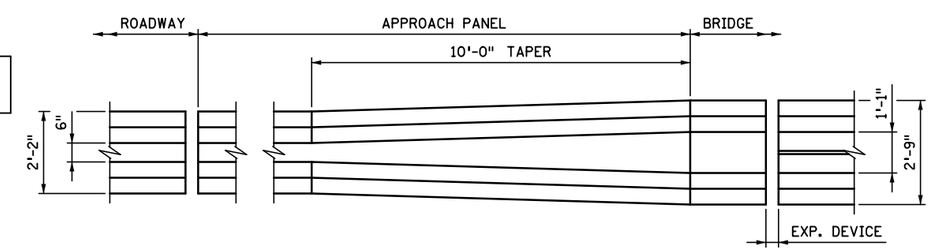

PLAN VIEW OF APPROACH BARRIER

GENERAL NOTES

CONCRETE BARRIER SHALL BE CONC. MIX 3Y46 OR 3Y46A.
CONCRETE BARRIER:
SECTION A-A, BRIDGE BARRIER
1112 LBS./FT. (0.275 CU. YDS./FT.)
SECTION B-B, 10 FT. TAPER ON APPROACH PANEL
9667 LBS. (2.387 CU. YDS.)
SECTION B-B, APPROACH BARRIER BETWEEN ROADWAY AND TAPER
762 LBS./FT. (0.188 CU. YDS./FT.)

FINISH ALL EDGES OF BARRIER WITH ½" VEE, EXCEPT WHERE OTHERWISE NOTED.

MAXIMUM SPACING OF CONCRETE DEFLECTION JOINTS SHALL BE 20 FT.

SEE SUPERSTRUCTURE SHEET FOR JOINT SPACING.

BARRIER QUANTITIES ARE INCLUDED IN SUMMARY OF QUANTITIES FOR SUPERSTRUCTURE.

① POLYSTYRENE, TYPE B. SEE SPECIAL PROVISIONS.

② VARIES FROM 6" AT END OF APPROACH PANEL AND TAPER TO 1'-1" AT END OF BRIDGE. SEE PLAN VIEW OF APPROACH BARRIER.

③ JOINT TO BE ADJACENT TO TRANSVERSE SLAB JOINTS IN APPROACH PANEL WHEN REQUIRED.

④ ONLY ONE M308E IS PLACED AT TOP WHEN DIMENSION IS 8" OR LESS.

BILL OF REINFORCEMENT FOR BARRIER

BAR	NO.	LENGTH	SHAPE	LOCATION
M501E		5'-0"		BARRIER DOWEL
M502E		9'-3"		BARRIER VERTICAL
M503E		7'-0"		BARRIER VERTICAL
M504E		4'-1"		BARRIER DOWEL
M505E		4'-11"		BARRIER VERTICAL
M406E				BARRIER LONGITUDINAL
M407E				BARRIER LONGITUDINAL
M308E				BARRIER LONGITUDINAL

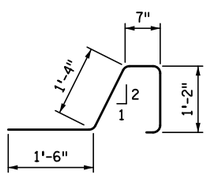

M501E

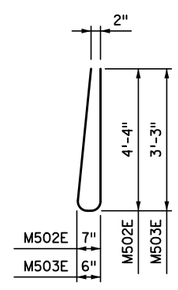

M502E & M503E

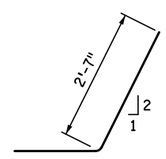

M504E

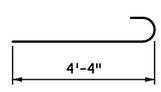

M505E

REVISED: 04-17-2013

APPROVED: APRIL 22, 2004

STATE BRIDGE ENGINEER

CERTIFIED BY _____ LICENSED PROFESSIONAL ENGINEER _____ DATE

NAME: LIC. NO.

TITLE: SPLIT MEDIAN BARRIER AND GLARE SCREEN

TYPE F (WITHOUT CONCRETE WEARING COURSE)

DES: DR: CHK: CHK:

SHEET NO. OF SHEETS

APPROVED:

FIG. 5-397.135

BRIDGE NO.

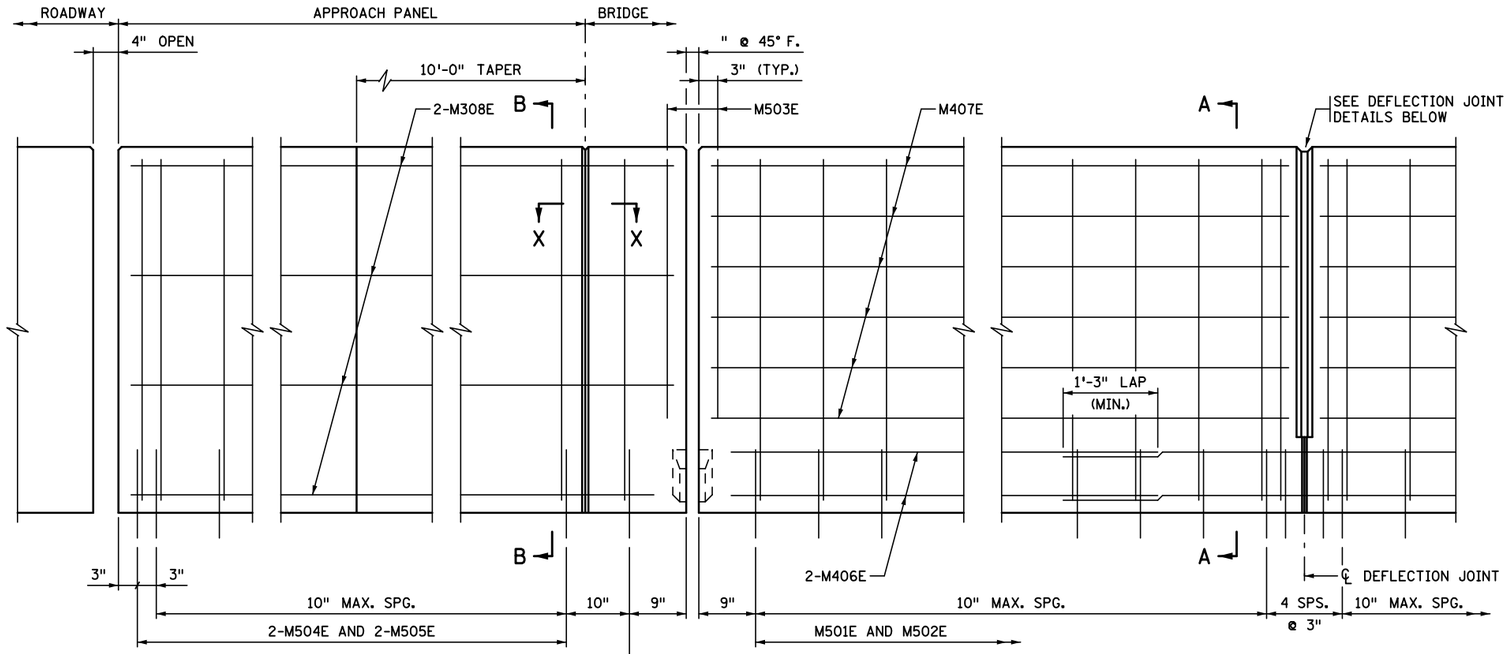

RELIEF JOINT

EXPANSION JOINT

EXPANSION DEVICE NOT SHOWN

DEFLECTION JOINT

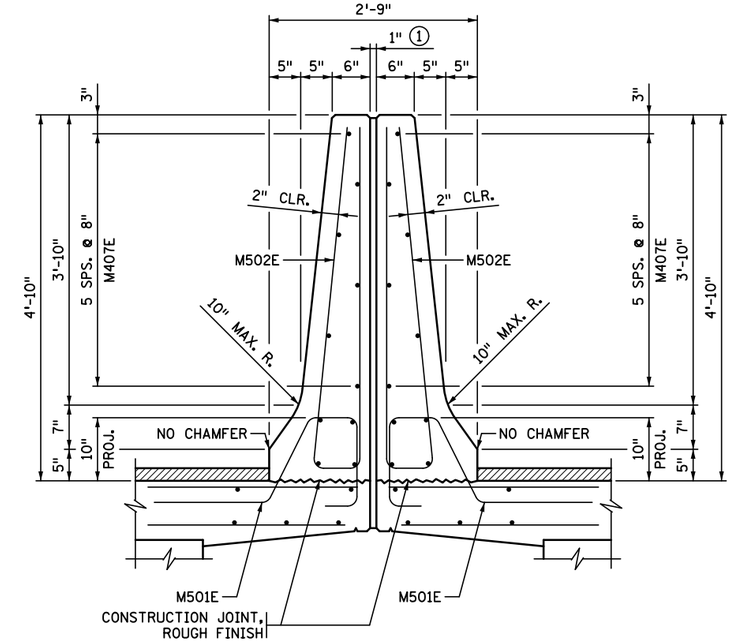

SECTION A-A

INSIDE ELEVATION OF BARRIER

WEARING COURSE NOT SHOWN

RAIL MEETS TEST LEVEL 4 REQUIREMENTS OF NCHRP REPORT 350.

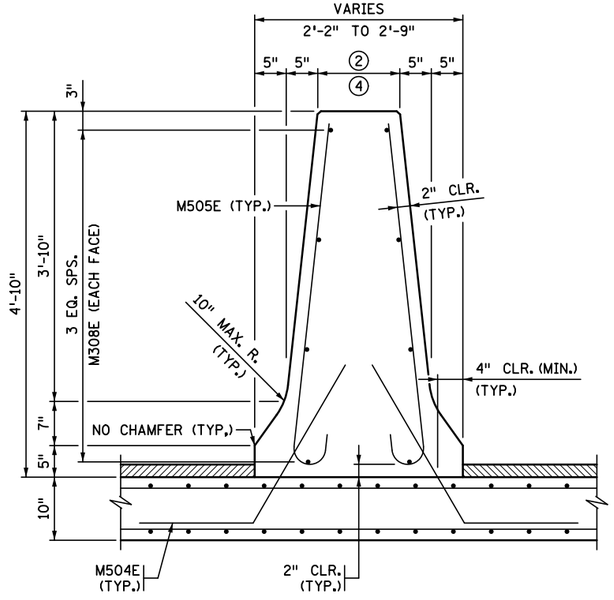

SECTION B-B

BITUMINOUS OR CONCRETE WEARING COURSE

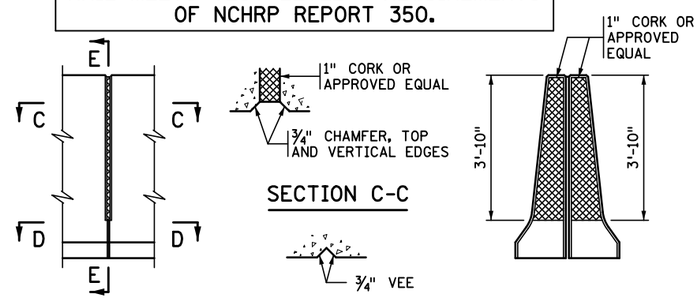

ELEVATION

SECTION C-C

SECTION D-D

SECTION E-E

DEFLECTION JOINT DETAILS

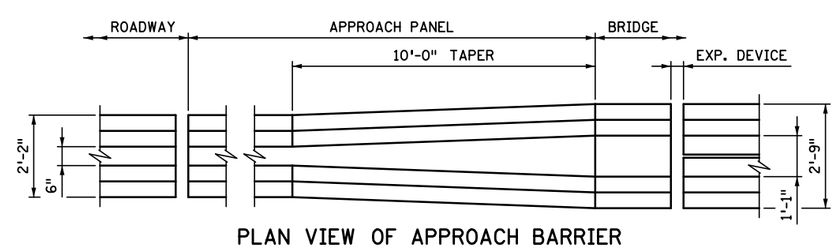

PLAN VIEW OF APPROACH BARRIER

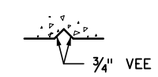

SECTION X-X

APPROACH PANEL JOINT ③

GENERAL NOTES

CONCRETE BARRIER SHALL BE CONC. MIX 3Y46 OR 3Y46A.
CONCRETE BARRIER:
SECTION A-A, BRIDGE BARRIER
1179 LBS./FT. (0.291 CU. YDS./FT.)
SECTION B-B, 10 FT. TAPER ON APPROACH PANEL
10,283 LBS. (2.539 CU. YDS.)
SECTION B-B, APPROACH BARRIER BETWEEN ROADWAY AND TAPER
817 LBS./FT. (0.202 CU. YDS./FT.)

FINISH ALL EDGES OF BARRIER WITH ½" VEE, EXCEPT WHERE OTHERWISE NOTED.

MAXIMUM SPACING OF CONCRETE DEFLECTION JOINTS SHALL BE 20 FT.

SEE SUPERSTRUCTURE SHEET FOR JOINT SPACING.

BARRIER QUANTITIES ARE INCLUDED IN SUMMARY OF QUANTITIES FOR SUPERSTRUCTURE.

① POLYSTYRENE, TYPE B. SEE SPECIAL PROVISIONS.

② VARIES FROM 6" AT END OF APPROACH PANEL AND TAPER TO 1'-1" AT END OF BRIDGE. SEE PLAN VIEW OF APPROACH BARRIER.

③ JOINT TO BE ADJACENT TO TRANSVERSE SLAB JOINTS IN APPROACH PANEL WHEN REQUIRED.

④ ONLY ONE M308E IS PLACED AT TOP WHEN DIMENSION IS 8" OR LESS.

BILL OF REINFORCEMENT FOR BARRIER

BAR	NO.	LENGTH	SHAPE	LOCATION
M501E		4'-11"		BARRIER DOWEL
M502E		9'-8"		BARRIER VERTICAL
M503E		7'-4"		BARRIER VERTICAL
M504E		3'-11"		BARRIER DOWEL
M505E		5'-0"		BARRIER VERTICAL
M406E		'- "		BARRIER LONGITUDINAL
M407E		'- "		BARRIER LONGITUDINAL
M308E		'- "		BARRIER LONGITUDINAL

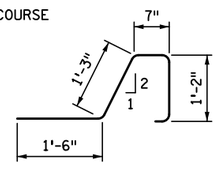

M501E

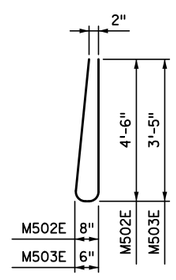

M502E & M503E

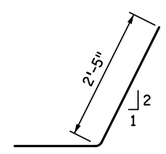

M504E

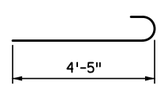

M505E

REVISED: 04-17-2013

APPROVED: APRIL 22, 2004

STATE BRIDGE ENGINEER

CERTIFIED BY _____ LICENSED PROFESSIONAL ENGINEER _____ DATE

NAME: LIC. NO.

TITLE: SPLIT MEDIAN BARRIER AND GLARE SCREEN

TYPE F (WITH CONCRETE WEARING COURSE)

DES: DR: CHK: CHK:

SHEET NO. OF SHEETS

APPROVED:

FIG. 5-397.136

BRIDGE NO.

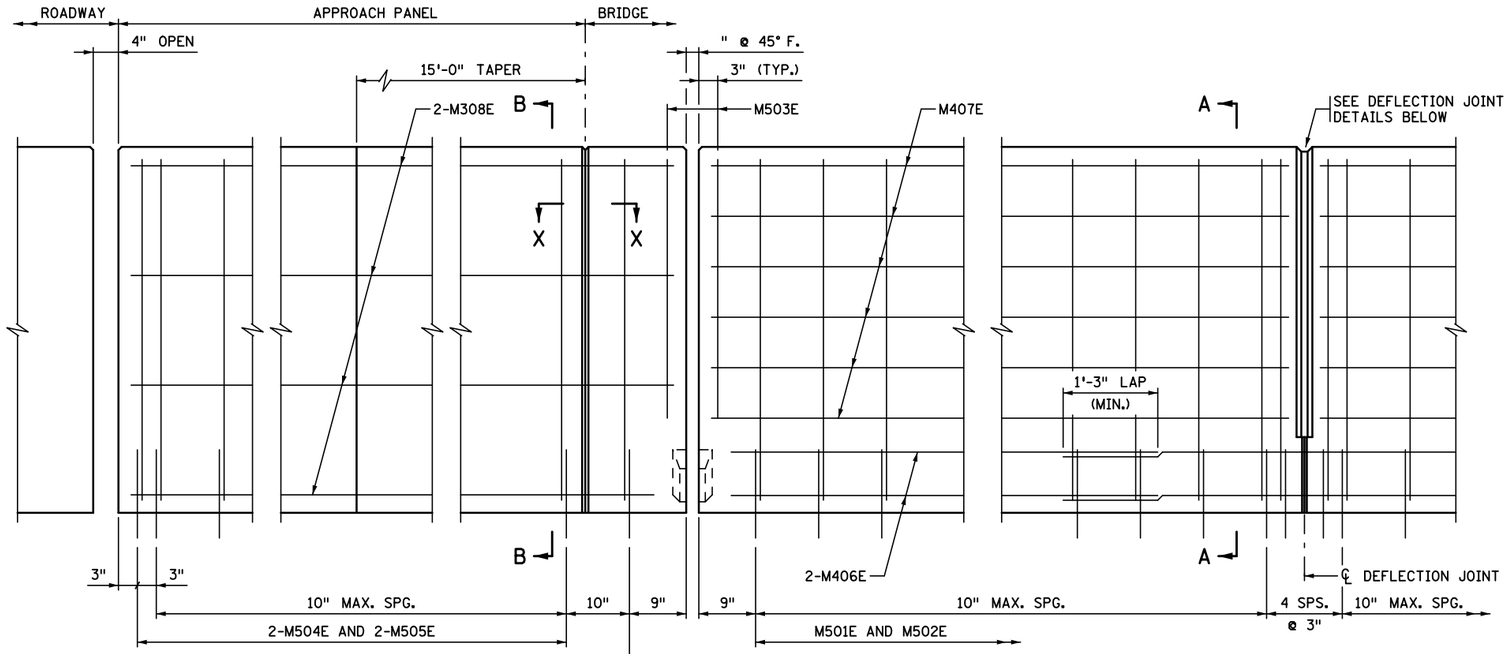

RELIEF JOINT

EXPANSION JOINT

EXPANSION DEVICE NOT SHOWN

DEFLECTION JOINT

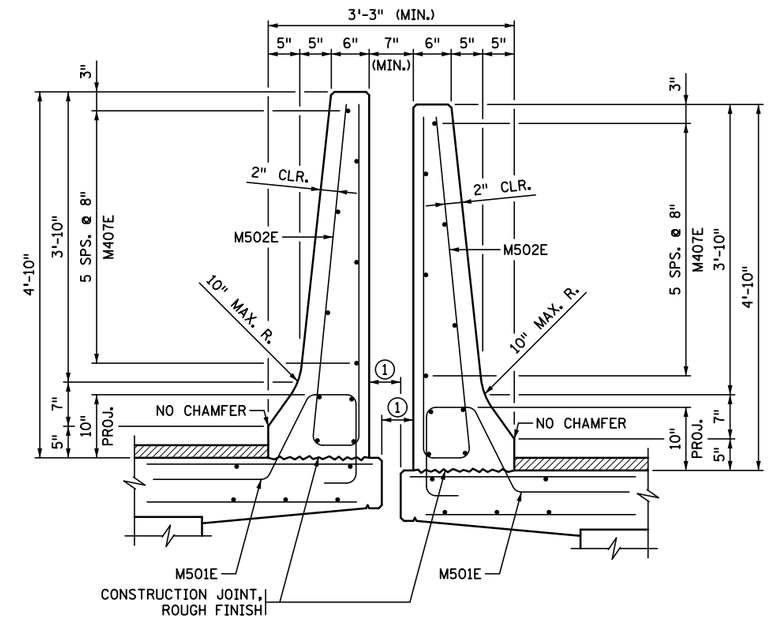

SECTION A-A

INSIDE ELEVATION OF BARRIER

WEARING COURSE NOT SHOWN

RAIL MEETS TEST LEVEL 4 REQUIREMENTS OF NCHRP REPORT 350.

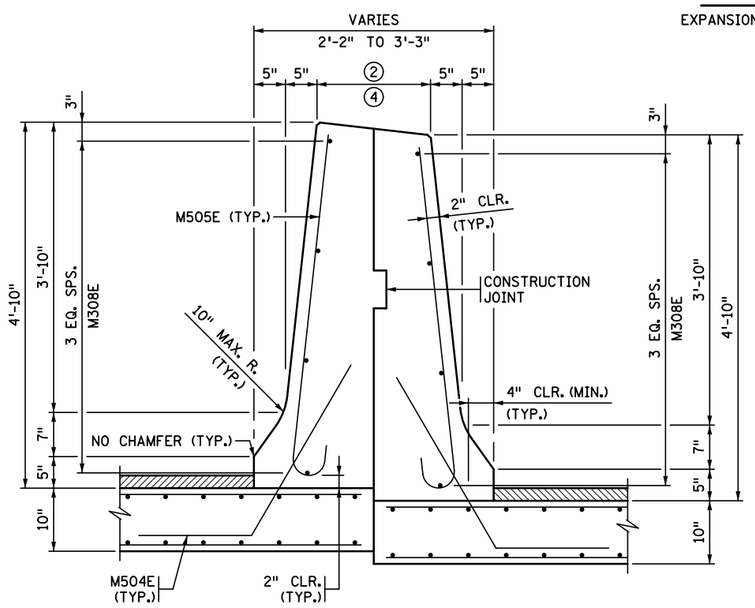

SECTION B-B

BITUMINOUS OR CONCRETE WEARING COURSE

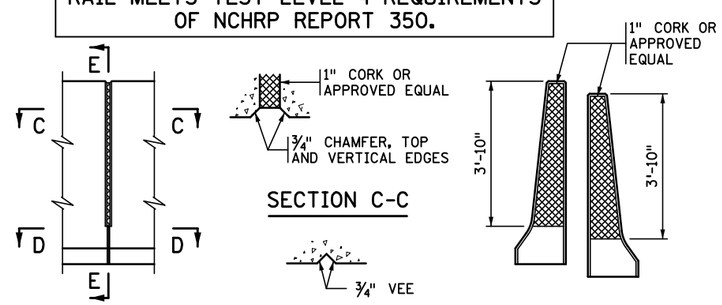

ELEVATION

SECTION C-C

SECTION D-D

SECTION E-E

DEFLECTION JOINT DETAILS

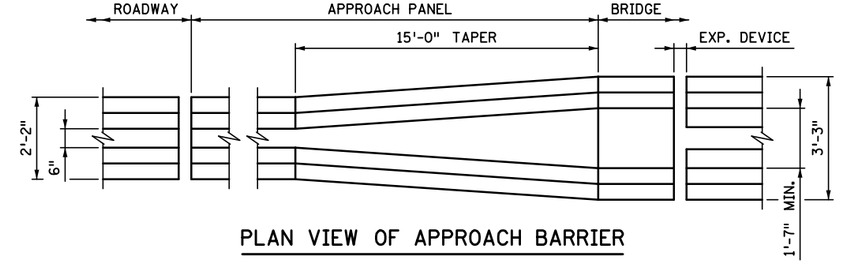

PLAN VIEW OF APPROACH BARRIER

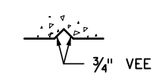

SECTION X-X

APPROACH PANEL JOINT ③

GENERAL NOTES

CONCRETE BARRIER SHALL BE CONC. MIX 3Y46 OR 3Y46A.
CONCRETE BARRIER:
SECTION A-A, BRIDGE BARRIER
1179 LBS./FT. (0.291 CU. YDS./FT.)
SECTION B-B, 15 FT. TAPER ON APPROACH PANEL
VARIES
SECTION B-B, APPROACH BARRIER BETWEEN ROADWAY AND TAPER
VARIES

FINISH ALL EDGES OF BARRIER WITH ½" VEE, EXCEPT WHERE OTHERWISE NOTED.

MAXIMUM SPACING OF CONCRETE DEFLECTION JOINTS SHALL BE 20 FT.

SEE SUPERSTRUCTURE SHEET FOR JOINT SPACING.

BARRIER QUANTITIES ARE INCLUDED IN SUMMARY OF QUANTITIES FOR SUPERSTRUCTURE.

① 5" MINIMUM.

② VARIES FROM 6" AT END OF APPROACH PANEL AND TAPER TO 1'-7" AT END OF BRIDGE. SEE PLAN VIEW OF APPROACH BARRIER.

③ JOINT TO BE ADJACENT TO TRANSVERSE SLAB JOINTS IN APPROACH PANEL WHEN REQUIRED.

④ ONLY ONE M308E IS PLACED AT TOP WHEN DIMENSION IS 8" OR LESS.

BILL OF REINFORCEMENT FOR BARRIER

BAR	NO.	LENGTH	SHAPE	LOCATION
M501E		4'-11"		BARRIER DOWEL
M502E		9'-8"		BARRIER VERTICAL
M503E		7'-4"		BARRIER VERTICAL
M504E		4'-1"		BARRIER DOWEL
M505E		5'-0"		BARRIER VERTICAL
M406E		'- "		BARRIER LONGITUDINAL
M407E		'- "		BARRIER LONGITUDINAL
M308E		'- "		BARRIER LONGITUDINAL

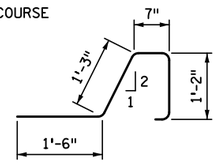

M501E

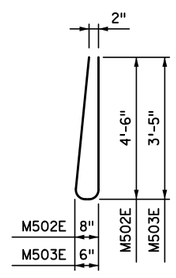

M502E & M503E

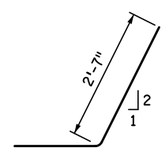

M504E

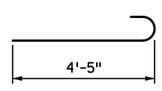

M505E

REVISED: 04-17-2013

APPROVED: APRIL 22, 2004

STATE BRIDGE ENGINEER

CERTIFIED BY

LICENSED PROFESSIONAL ENGINEER DATE

NAME: LIC. NO.

TITLE: OFFSET SPLIT MEDIAN BARRIER AND GLARE SCREEN

TYPE F (WITH CONCRETE WEARING COURSE)

DES: DR: CHK: CHK:

SHEET NO. OF SHEETS

APPROVED:

FIG. 5-397.137

BRIDGE NO.

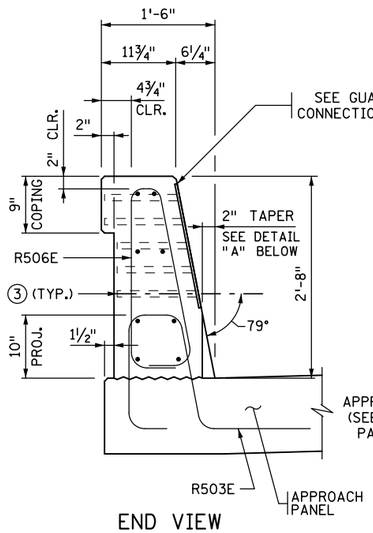

END VIEW

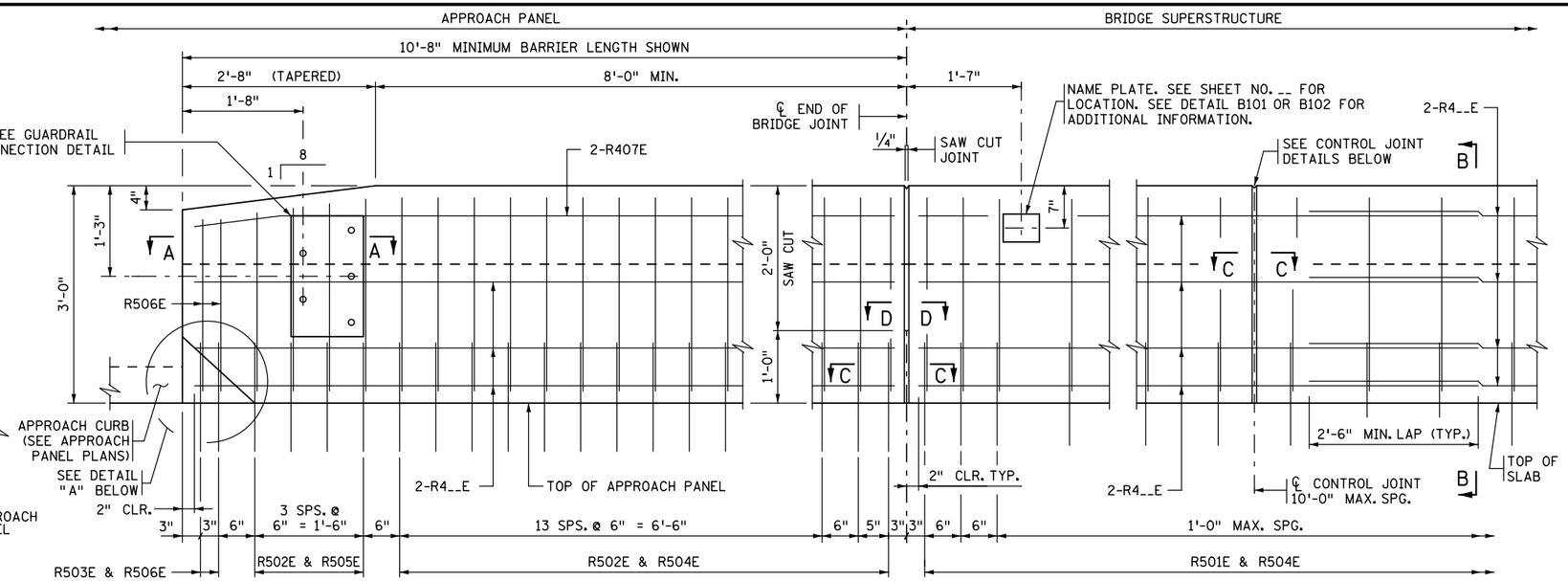

JOINT AT ABUTMENT

(INTEGRAL OR SEMI-INTEGRAL ABUTMENT)

CONTROL JOINT

INSIDE ELEVATION OF BARRIER

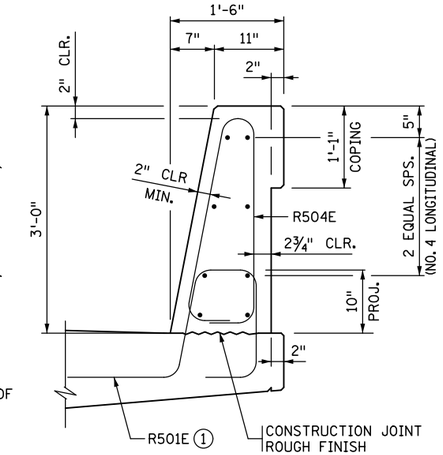

SECTION B-B

DESIGNER NOTE
(REMOVE PRIOR TO PLOTTING FINAL PLAN):

MINIMUM BARRIER LENGTH ON APPROACH PANEL IS 10'-8" WITH MINIMUM OF 22 R502E AND R503E DOWELS WITH ACCOMPANYING APPROPRIATE BARRIER VERTICAL BARS, 12" MAX. SPACING.
VERIFY APPROACH BARRIER LENGTH, NEED FOR A GUARDRAIL CONNECTION, AND VERTICAL TAPER WITH ROADWAY DESIGNER.
REFER TO MEMO TO DESIGNERS (2016-01) FOR ADDITIONAL REQUIREMENTS REGARDING BARRIER PLACEMENT.

BARRIER MEETS NCHRP 350 TL-4 REQUIREMENTS ON BRIDGE DECK AND TL-3 ON APPROACH PANEL.

BILL OF REINFORCEMENT FOR BARRIER				
BAR	NO.	LENGTH	SHAPE	LOCATION
R501E		5'-7"		BARRIER DOWEL
R502E		5'-9"		BARRIER DOWEL
R503E		5'-8"		BARRIER DOWEL
R504E		7'-1"		BARRIER VERTICAL
R505E	-- SER. OF 4	6'-7" TO 6'-11"		BARRIER VERTICAL
R506E		6'-5"		BARRIER VERTICAL
R407E		10'-3"		BARRIER LONGIT.
R4__E				BARRIER LONGIT.
R4__E				BARRIER LONGIT.
R4__E				BARRIER LONGIT.
R4__E				BARRIER LONGIT.
R4__E				BARRIER LONGIT.

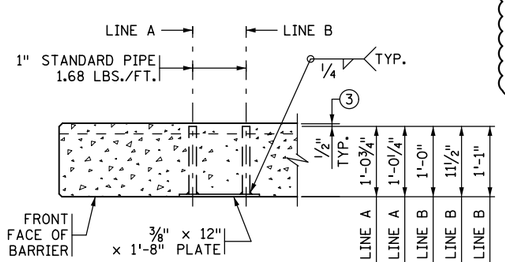

SECTION A-A

(REINFORCEMENT NOT SHOWN)

TRIM GUARDRAIL BOLTS SUCH THAT NO MORE THAN 1½" PROTRUDES FROM BACK FACE OF BARRIER.

☆ DIMENSIONS INCLUDE ⅜" PLATE

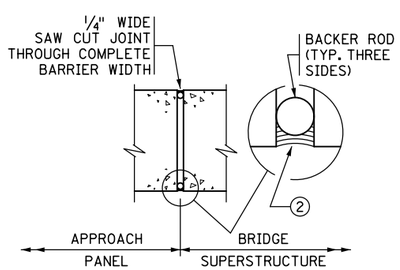

SECTION D-D

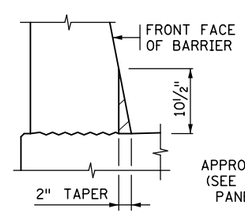

VIEW F-F

AT BARRIER END

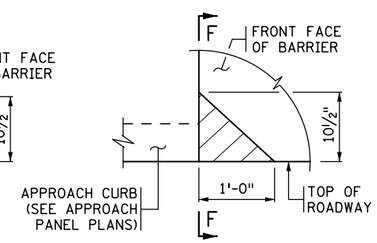

DETAIL "A"

ELEVATION VIEW

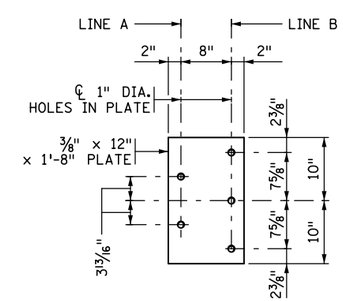

GUARDRAIL CONNECTION DETAIL

GALVANIZE AFTER FABRICATION PER SPEC. 3394
ESTIMATED WEIGHT = 34 LBS.

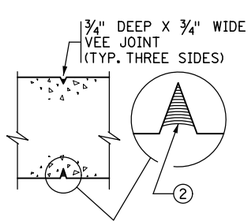

SECTION C-C

CAST-IN-PLACE CONSTRUCTION

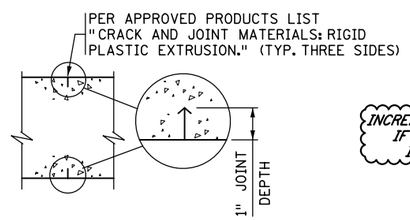

SECTION C-C

SLIPFORM CONSTRUCTION

CONTROL JOINT DETAILS

FOR SLIPFORM CONSTRUCTION: IMMEDIATELY AFTER CONCRETE IS PLACED AND WHILE IT IS STILL WET, CREATE A ONE INCH STRAIGHT GROOVE USING A TROWEL. INSERT RIGID PLASTIC EXTRUSION INTO GROOVE TO A DEPTH ⅛" BELOW THE SURFACE; FINISH OVER GROOVE COMPLETELY HIDING THE EXTRUSION.

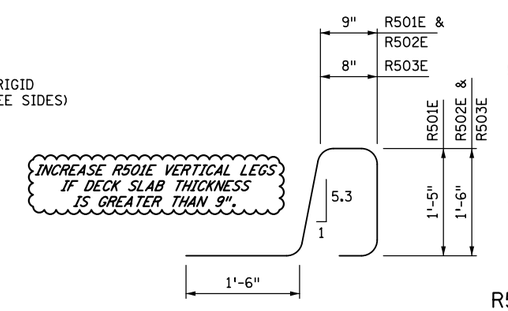

INCREASE R501E VERTICAL LEGS IF DECK SLAB THICKNESS IS GREATER THAN 9".

R501E, R502E, R503E

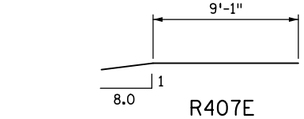

R407E

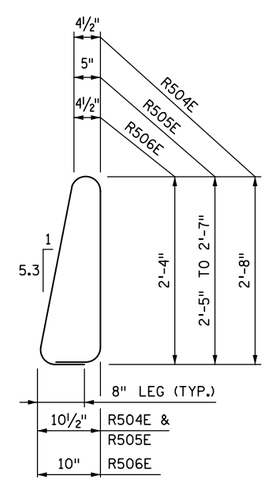

R504E, R505E, R506E

GENERAL NOTES

MEASURE PAYMENT LENGTH BETWEEN THE OUTSIDE ENDS OF THE BARRIER.

CONCRETE BARRIER = 496 LBS./FT. (0.123 CU. YDS./FT.)

FINISH ALL EDGES OF BARRIER WITH ½" CHAMFER, EXCEPT WHERE OTHERWISE NOTED.

SPACE CONTROL JOINTS AT 10 FT. MAXIMUM. REFER TO SUPERSTRUCTURE SHEET FOR SPECIFIC SPACING INFORMATION.

GUARDRAIL CONNECTION TO BE STRUCTURAL STEEL, SPEC. 3306.

GUARDRAIL CONNECTION AND NAME PLATE TO BE CONSIDERED INCIDENTAL TO BARRIER.

BARRIER QUANTITIES ARE LISTED IN SUMMARY OF QUANTITIES FOR SUPERSTRUCTURE.

① PLACE BAR ON TOP OF BOTTOM REINFORCEMENT MAT IN DECK.

② JOINT SEALANT PER MnDOT APPROVED/QUALIFIED PRODUCTS LIST - CRACK AND JOINT MATERIALS - SILICONE JOINT SEALERS.

③ REMOVE CONCRETE FROM PIPE ENDS AFTER SLIPFORMING OR FORM REMOVAL.

REVISION: MAY 10, 2017

APPROVED: AUGUST 24, 2016

Kevin Western

STATE BRIDGE ENGINEER

CERTIFIED BY _____ LICENSED PROFESSIONAL ENGINEER _____ DATE

NAME: LIC. NO.

TITLE: CONCRETE BARRIER 36" (TYPE S, TL-4)

INTEGRAL OR SEMI-INTEGRAL ABUTMENT WITH GUARDRAIL CONNECTION (WITHOUT CONCRETE WEARING COURSE)

DES: DR: CHK: CHK:

SHEET NO. OF SHEETS

FIG. 5-397.138(A)

APPROVED:

BRIDGE NO.

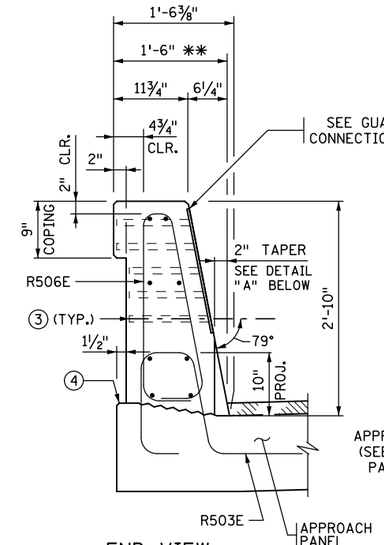

END VIEW

** DIMENSION SHOWN IS TO THE TOP OF THE WEARING COURSE AT GUTTERLINE.

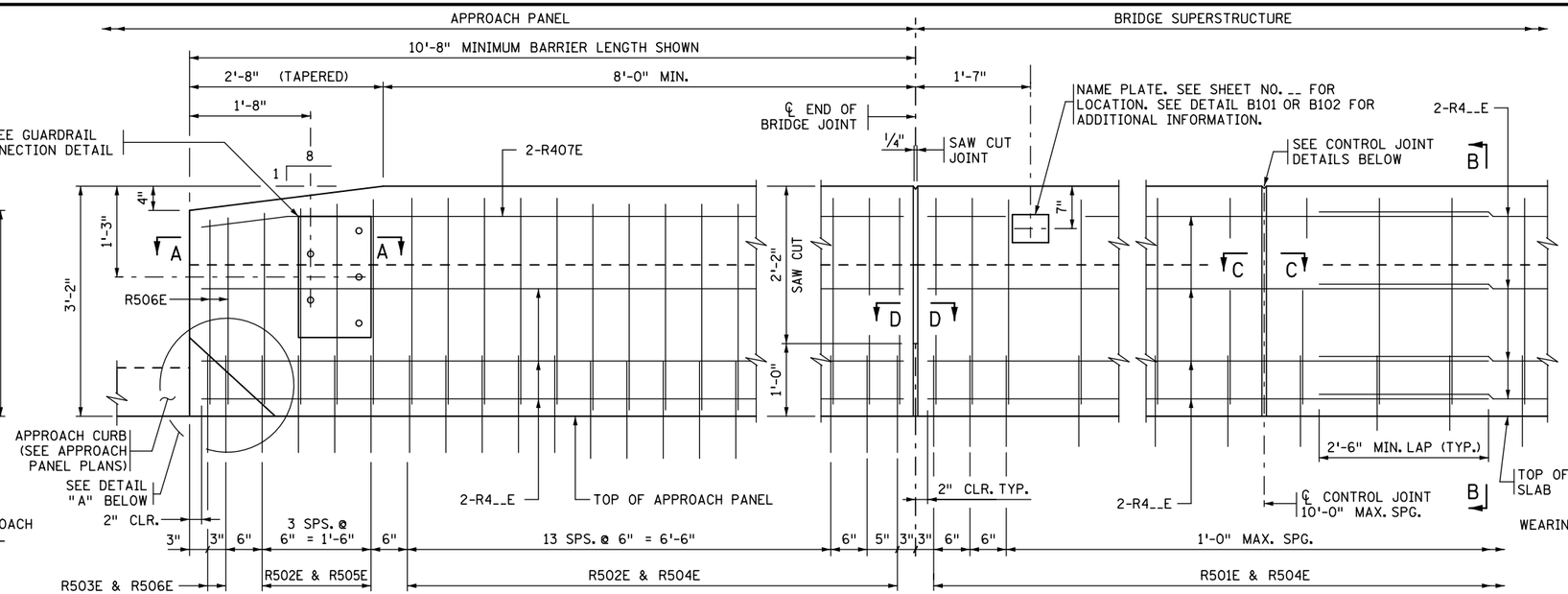

JOINT AT ABUTMENT

(INTEGRAL OR SEMI-INTEGRAL ABUTMENT)

CONTROL JOINT

INSIDE ELEVATION OF BARRIER

CONCRETE WEARING COURSE NOT SHOWN

BARRIER MEETS NCHRP 350 TL-4 REQUIREMENTS ON BRIDGE DECK AND TL-3 ON APPROACH PANEL.

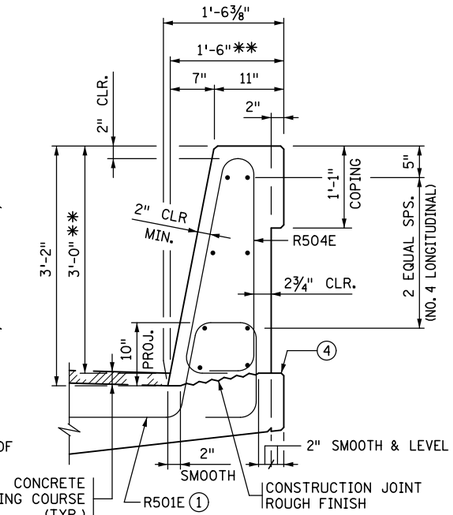

SECTION B-B

** DIMENSION SHOWN IS TO THE TOP OF THE WEARING COURSE AT GUTTERLINE.

DESIGNER NOTE
(REMOVE PRIOR TO PLOTTING FINAL PLAN):

MINIMUM BARRIER LENGTH ON APPROACH PANEL IS 10'-8" WITH MINIMUM OF 22 R502E AND R503E DOWELS WITH ACCOMPANYING APPROPRIATE BARRIER VERTICAL BARS, 12" MAX. SPACING.
VERIFY APPROACH BARRIER LENGTH, NEED FOR A GUARDRAIL CONNECTION, AND VERTICAL TAPER WITH ROADWAY DESIGNER.
REFER TO MEMO TO DESIGNERS (2016-01) FOR ADDITIONAL REQUIREMENTS REGARDING BARRIER PLACEMENT.

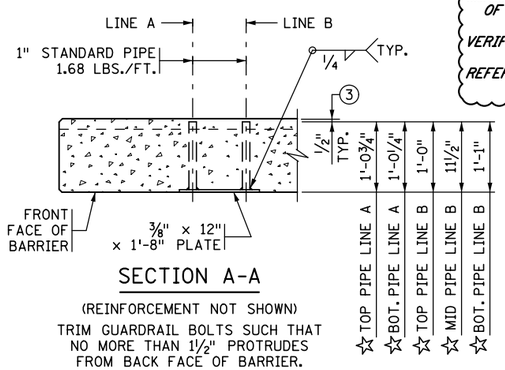

SECTION A-A

(REINFORCEMENT NOT SHOWN)

TRIM GUARDRAIL BOLTS SUCH THAT NO MORE THAN 1½" PROTRUDES FROM BACK FACE OF BARRIER.

☆ DIMENSIONS INCLUDE ⅜" PLATE

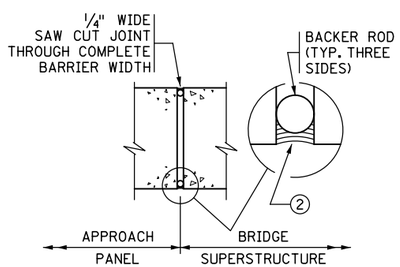

SECTION D-D

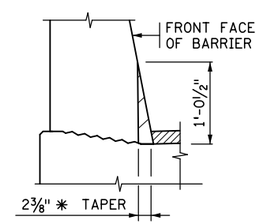

VIEW F-F

AT BARRIER END

* AT TOP OF STRUCTURAL SLAB

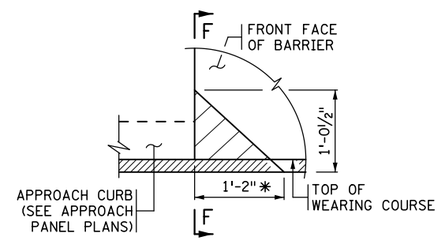

DETAIL "A"

ELEVATION VIEW

(WEARING COURSE SHOWN)

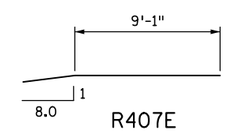

R407E

BILL OF REINFORCEMENT FOR BARRIER				
BAR	NO.	LENGTH	SHAPE	LOCATION
R501E		5'-4"		BARRIER DOWEL
R502E		5'-6"		BARRIER DOWEL
R503E		5'-5"		BARRIER DOWEL
R504E		7'-5"		BARRIER VERTICAL
R505E	-- SER. OF 4	6'-11" TO 7'-3"		BARRIER VERTICAL
R506E		6'-9"		BARRIER VERTICAL
R407E		10'-3"		BARRIER LONGIT.
R4__E				BARRIER LONGIT.
R4__E				BARRIER LONGIT.
R4__E				BARRIER LONGIT.
R4__E				BARRIER LONGIT.
R4__E				BARRIER LONGIT.

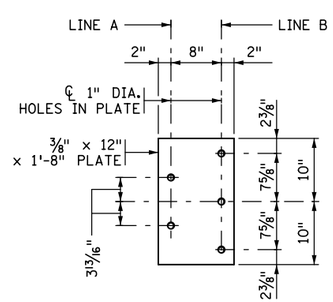

GUARDRAIL CONNECTION DETAIL

GALVANIZE AFTER FABRICATION PER SPEC. 3394
ESTIMATED WEIGHT = 34 LBS.

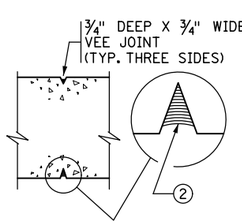

SECTION C-C

CAST-IN-PLACE CONSTRUCTION

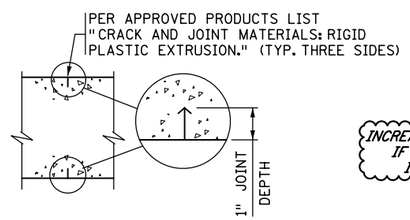

SECTION C-C

SLIPFORM CONSTRUCTION

CONTROL JOINT DETAILS

FOR SLIPFORM CONSTRUCTION: IMMEDIATELY AFTER CONCRETE IS PLACED AND WHILE IT IS STILL WET, CREATE A ONE INCH STRAIGHT GROOVE USING A TROWEL. INSERT RIGID PLASTIC EXTRUSION INTO GROOVE TO A DEPTH ⅛" BELOW THE SURFACE; FINISH OVER GROOVE COMPLETELY HIDING THE EXTRUSION.

INCREASE R501E VERTICAL LEGS IF DECK SLAB THICKNESS IS GREATER THAN 9".

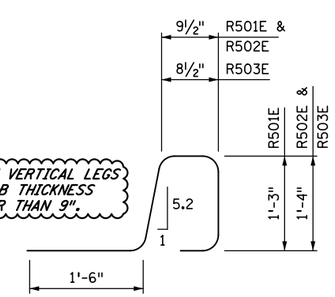

R501E, R502E, R503E

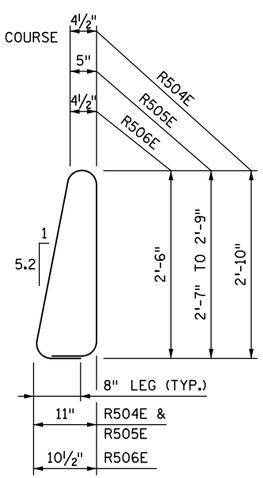

R504E, R505E, R506E

GENERAL NOTES

MEASURE PAYMENT LENGTH BETWEEN THE OUTSIDE ENDS OF THE BARRIER.

CONCRETE BARRIER = 513 LBS./FT. (0.127 CU. YDS./FT.)

FINISH ALL EDGES OF BARRIER WITH ½" CHAMFER, EXCEPT WHERE OTHERWISE NOTED.

SPACE CONTROL JOINTS AT 10 FT. MAXIMUM. REFER TO SUPERSTRUCTURE SHEET FOR SPECIFIC SPACING INFORMATION.

GUARDRAIL CONNECTION TO BE STRUCTURAL STEEL, SPEC. 3306.

GUARDRAIL CONNECTION AND NAME PLATE TO BE CONSIDERED INCIDENTAL TO BARRIER.

BARRIER QUANTITIES ARE LISTED IN SUMMARY OF QUANTITIES FOR SUPERSTRUCTURE.

① PLACE BAR ON TOP OF BOTTOM REINFORCEMENT MAT IN DECK.

② JOINT SEALANT PER MnDOT APPROVED/QUALIFIED PRODUCTS LIST - CRACK AND JOINT MATERIALS - SILICONE JOINT SEALERS.

③ REMOVE CONCRETE FROM PIPE ENDS AFTER SLIPFORMING OR FORM REMOVAL.

④ MATCH GUTTERLINE ELEVATION.

REVISION: MAY 10, 2017

APPROVED: AUGUST 24, 2016

Kevin Western
STATE BRIDGE ENGINEER

CERTIFIED BY _____ LICENSED PROFESSIONAL ENGINEER _____ DATE

NAME: LIC. NO.

TITLE: CONCRETE BARRIER 36" (TYPE S, TL-4)
INTEGRAL OR SEMI-INTEGRAL ABUTMENT WITH GUARDRAIL CONNECTION (WITH 2" CONCRETE WEARING COURSE)

DES: DR: CHK: CHK:

SHEET NO. OF SHEETS

APPROVED:

FIG. 5-397.138(B)

BRIDGE NO.

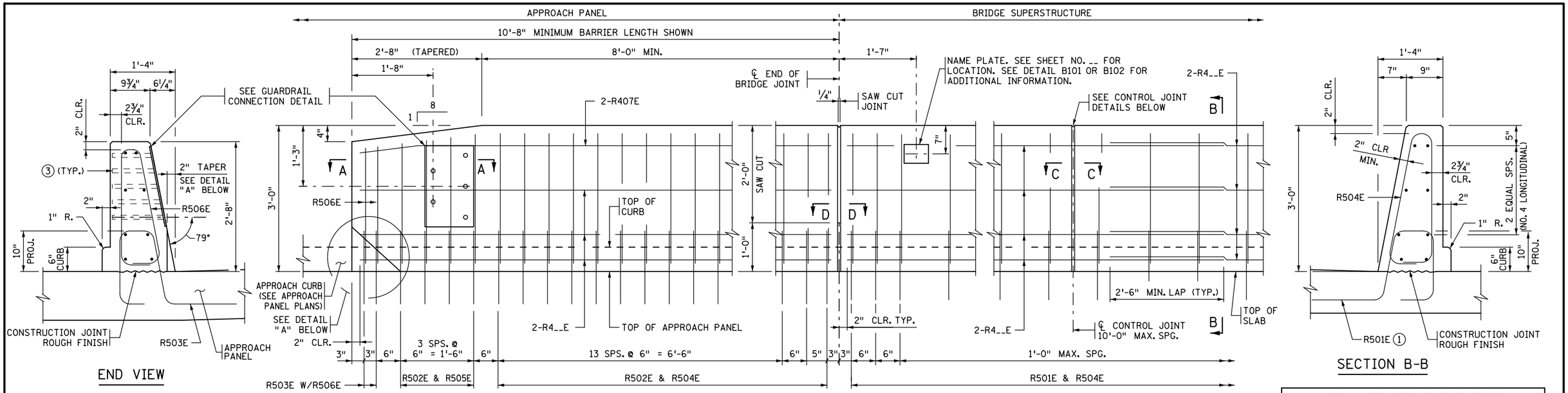

DESIGNER NOTE
(REMOVE PRIOR TO PLOTTING FINAL PLAN):

MINIMUM BARRIER LENGTH ON APPROACH PANEL IS 10'-8" WITH MINIMUM OF 22 R502E AND R503E DOWELS WITH ACCOMPANYING APPROPRIATE BARRIER VERTICAL BARS, 12" MAX. SPACING.
VERIFY APPROACH BARRIER LENGTH, NEED FOR A GUARDRAIL CONNECTION, AND VERTICAL TAPER WITH ROADWAY DESIGNER.
REFER TO MEMO TO DESIGNERS (2016-01) FOR ADDITIONAL REQUIREMENTS REGARDING BARRIER PLACEMENT.

BARRIER MEETS NCHRP 350 TL-4 REQUIREMENTS ON BRIDGE DECK AND TL-3 ON APPROACH PANEL.

BILL OF REINFORCEMENT FOR BARRIER

BAR	NO.	LENGTH	SHAPE	LOCATION
R501E		5'-7"		BARRIER DOWEL
R502E		5'-9"		BARRIER DOWEL
R503E		5'-8"		BARRIER DOWEL
R504E		7'-1"		BARRIER VERTICAL
R505E	-- SER. OF 4	6'-7" TO 6'-11"		BARRIER VERTICAL
R506E		6'-5"		BARRIER VERTICAL
R407E		10'-3"		BARRIER LONGIT.
R4__E				BARRIER LONGIT.
R4__E				BARRIER LONGIT.
R4__E				BARRIER LONGIT.
R4__E				BARRIER LONGIT.
R4__E				BARRIER LONGIT.

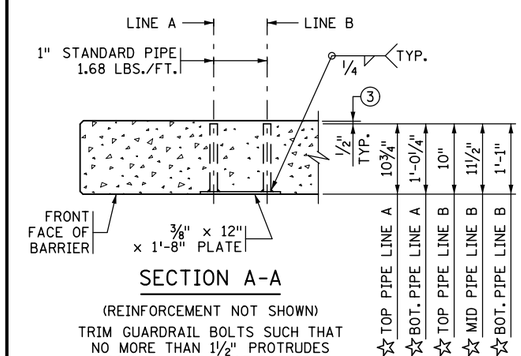

SECTION A-A

(REINFORCEMENT NOT SHOWN)

TRIM GUARDRAIL BOLTS SUCH THAT NO MORE THAN 1½" PROTRUDES FROM BACK FACE OF BARRIER.

☆ DIMENSIONS INCLUDE ⅜" PLATE

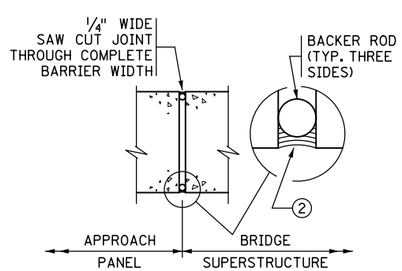

SECTION D-D

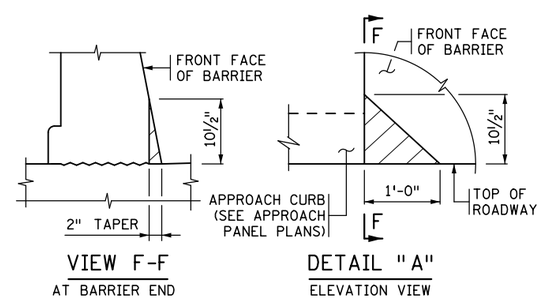

VIEW F-F
AT BARRIER END

DETAIL "A"
ELEVATION VIEW

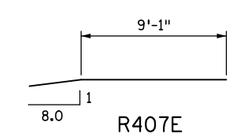

R407E

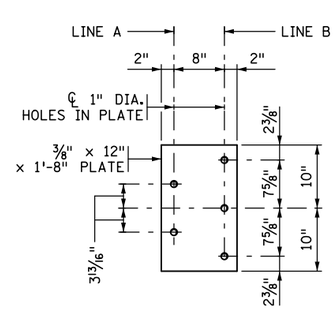

GUARDRAIL CONNECTION DETAIL

GALVANIZE AFTER FABRICATION PER SPEC. 3394
ESTIMATED WEIGHT = 34 LBS.

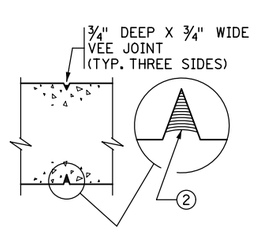

SECTION C-C
CAST-IN-PLACE CONSTRUCTION

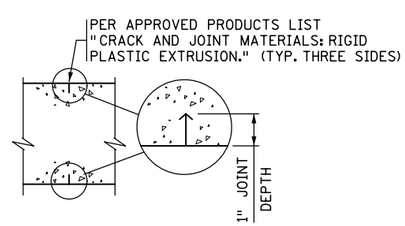

SECTION C-C
SLIPFORM CONSTRUCTION

CONTROL JOINT DETAILS

FOR SLIPFORM CONSTRUCTION: IMMEDIATELY AFTER CONCRETE IS PLACED AND WHILE IT IS STILL WET, CREATE A ONE INCH STRAIGHT GROOVE USING A TROWEL. INSERT RIGID PLASTIC EXTRUSION INTO GROOVE TO A DEPTH ⅛" BELOW THE SURFACE; FINISH OVER GROOVE COMPLETELY HIDING THE EXTRUSION.

INCREASE R501E VERTICAL LEGS IF DECK SLAB THICKNESS IS GREATER THAN 9".

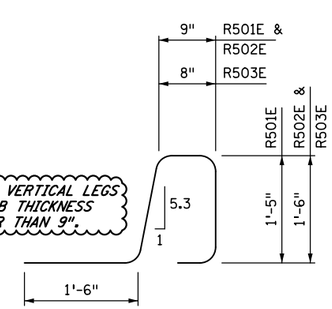

R501E, R502E, R503E

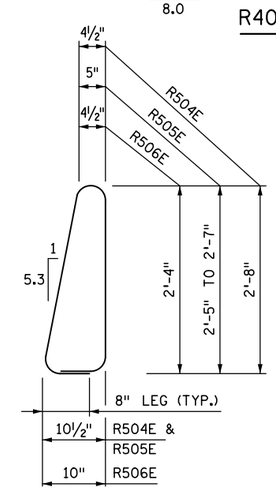

R504E, R505E, R506E

GENERAL NOTES

MEASURE PAYMENT LENGTH BETWEEN THE OUTSIDE ENDS OF THE BARRIER.

CONCRETE BARRIER = 481 LBS./FT. (0.119 CU. YDS./FT.)

FINISH ALL EDGES OF BARRIER WITH ½" CHAMFER, EXCEPT WHERE OTHERWISE NOTED.

SPACE CONTROL JOINTS AT 10 FT. MAXIMUM. REFER TO SUPERSTRUCTURE SHEET FOR SPECIFIC SPACING INFORMATION.

GUARDRAIL CONNECTION TO BE STRUCTURAL STEEL, SPEC. 3306.

GUARDRAIL CONNECTION AND NAME PLATE TO BE CONSIDERED INCIDENTAL TO BARRIER.

BARRIER QUANTITIES ARE LISTED IN SUMMARY OF QUANTITIES FOR SUPERSTRUCTURE.

① PLACE BAR ON TOP OF BOTTOM REINFORCEMENT MAT IN DECK.

② JOINT SEALANT PER MnDOT APPROVED/QUALIFIED PRODUCTS LIST - CRACK AND JOINT MATERIALS - SILICONE JOINT SEALERS.

③ REMOVE CONCRETE FROM PIPE ENDS AFTER SLIPFORMING OR FORM REMOVAL.

REVISION: MAY 10, 2017

APPROVED: AUGUST 24, 2016
Kevin Western
STATE BRIDGE ENGINEER

CERTIFIED BY _____ LICENSED PROFESSIONAL ENGINEER _____ DATE
NAME: LIC. NO.

TITLE: CONCRETE BARRIER 36" (TYPE S, TL-4)
INTEGRAL OR SEMI-INTEGRAL ABUTMENT WITH BRIDGE SLAB SIDEWALK AND GUARDRAIL CONNECTION (WITHOUT CONCRETE WEARING COURSE)

DES: DR: CHK: CHK:
SHEET NO. OF SHEETS

APPROVED:

FIG. 5-397.138(C)

BRIDGE NO.

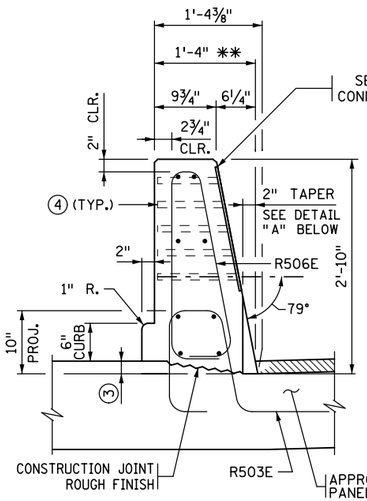

END VIEW

** DIMENSION SHOWN IS TO THE TOP OF THE WEARING COURSE AT GUTTERLINE.

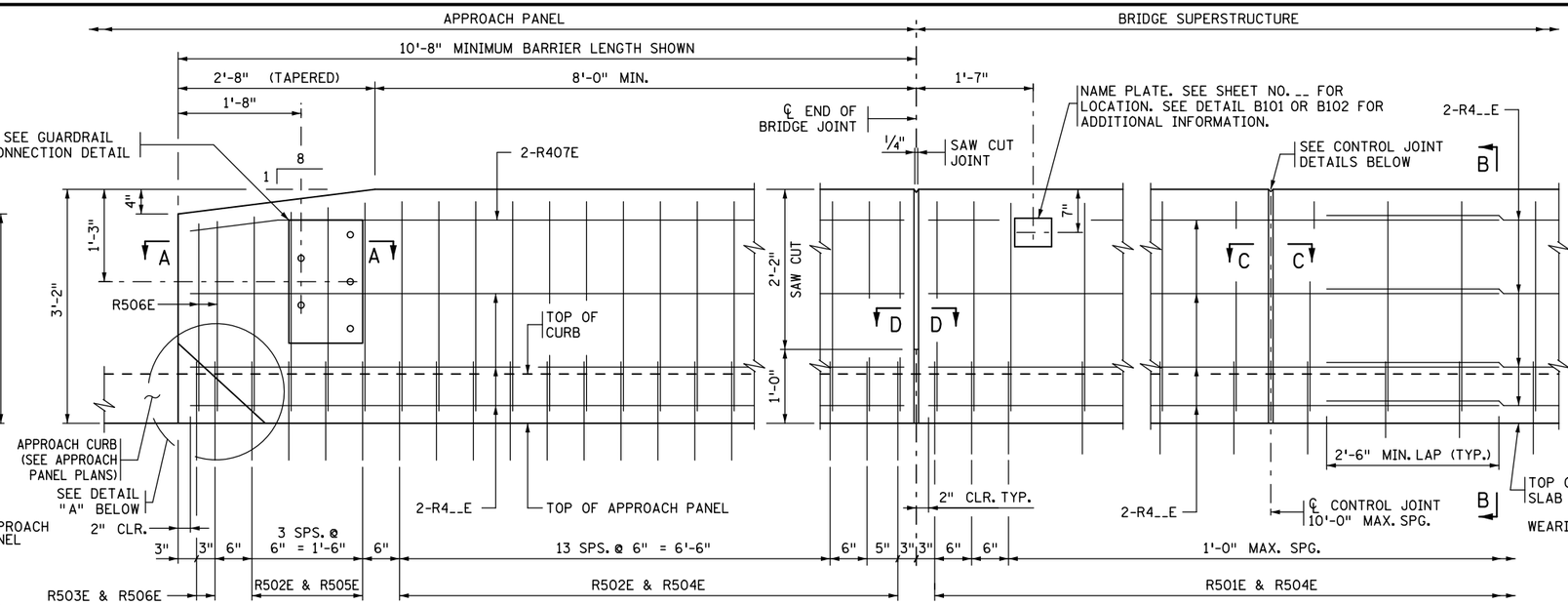

JOINT AT ABUTMENT

(INTEGRAL OR SEMI-INTEGRAL ABUTMENT)

CONTROL JOINT

INSIDE ELEVATION OF BARRIER

CONCRETE WEARING COURSE NOT SHOWN

BARRIER MEETS NCHRP 350 TL-4 REQUIREMENTS ON BRIDGE DECK AND TL-3 ON APPROACH PANEL.

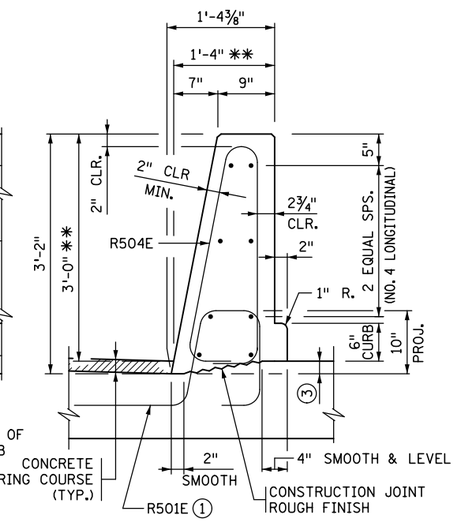

SECTION B-B

** DIMENSION SHOWN IS TO THE TOP OF THE WEARING COURSE AT GUTTERLINE.

DESIGNER NOTE
(REMOVE PRIOR TO PLOTTING FINAL PLAN):

MINIMUM BARRIER LENGTH ON APPROACH PANEL IS 10'-8" WITH MINIMUM OF 22 R502E AND R503E DOWELS WITH ACCOMPANYING APPROPRIATE BARRIER VERTICAL BARS, 12" MAX. SPACING.
VERIFY APPROACH BARRIER LENGTH, NEED FOR A GUARDRAIL CONNECTION, AND VERTICAL TAPER WITH ROADWAY DESIGNER.
REFER TO MEMO TO DESIGNERS (2016-01) FOR ADDITIONAL REQUIREMENTS REGARDING BARRIER PLACEMENT.

BILL OF REINFORCEMENT FOR BARRIER

BAR	NO.	LENGTH	SHAPE	LOCATION
R501E		5'-4"		BARRIER DOWEL
R502E		5'-6"		BARRIER DOWEL
R503E		5'-5"		BARRIER DOWEL
R504E		7'-5"		BARRIER VERTICAL
R505E	-- SER. OF 4	6'-11" TO 7'-3"		BARRIER VERTICAL
R506E		6'-9"		BARRIER VERTICAL
R407E		10'-3"		BARRIER LONGIT.
R4__E				BARRIER LONGIT.
R4__E				BARRIER LONGIT.
R4__E				BARRIER LONGIT.
R4__E				BARRIER LONGIT.
R4__E				BARRIER LONGIT.

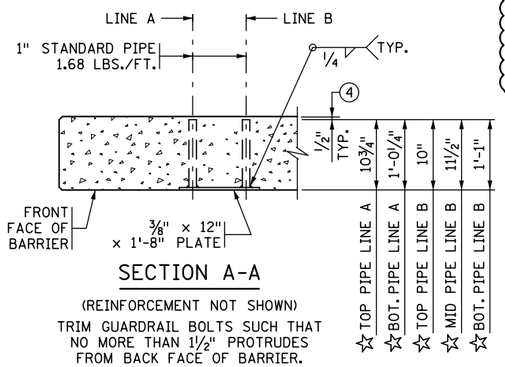

SECTION A-A

(REINFORCEMENT NOT SHOWN)

TRIM GUARDRAIL BOLTS SUCH THAT NO MORE THAN 1½" PROTRUDES FROM BACK FACE OF BARRIER.

☆ DIMENSIONS INCLUDE ⅜" PLATE

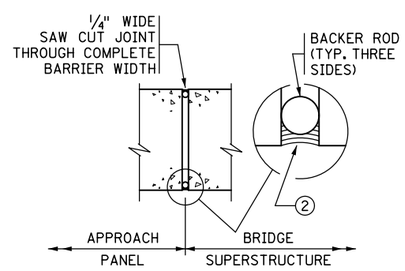

SECTION D-D

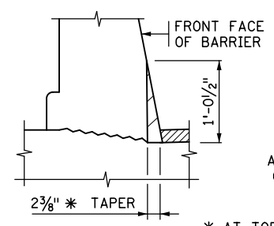

VIEW F-F

AT BARRIER END

* AT TOP OF STRUCTURAL SLAB

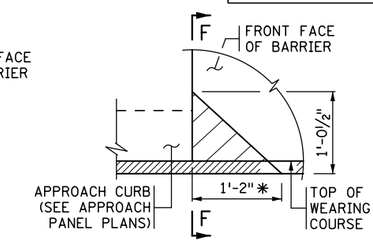

DETAIL "A"

ELEVATION VIEW (WEARING COURSE SHOWN)

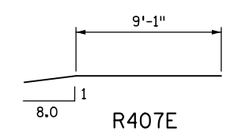

R407E

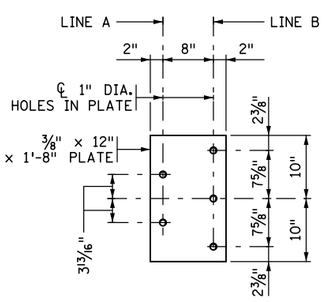

GUARDRAIL CONNECTION DETAIL

GALVANIZE AFTER FABRICATION PER SPEC. 3394
ESTIMATED WEIGHT = 34 LBS.

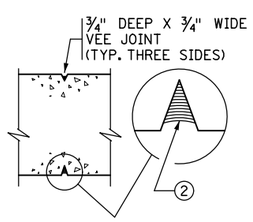

SECTION C-C

CAST-IN-PLACE CONSTRUCTION

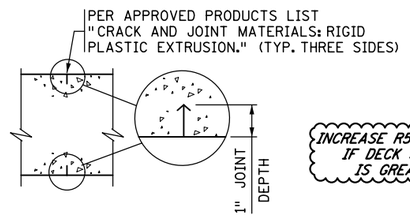

SECTION C-C

SLIPFORM CONSTRUCTION

CONTROL JOINT DETAILS

FOR SLIPFORM CONSTRUCTION: IMMEDIATELY AFTER CONCRETE IS PLACED AND WHILE IT IS STILL WET, CREATE A ONE INCH STRAIGHT GROOVE USING A TROWEL. INSERT RIGID PLASTIC EXTRUSION INTO GROOVE TO A DEPTH ⅛" BELOW THE SURFACE; FINISH OVER GROOVE COMPLETELY HIDING THE EXTRUSION.

INCREASE R501E VERTICAL LEGS IF DECK SLAB THICKNESS IS GREATER THAN 9".

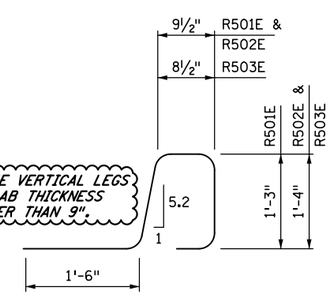

R501E, R502E, R503E

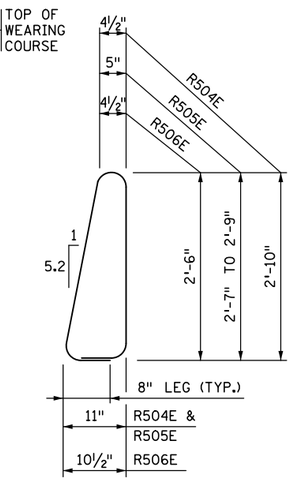

R504E, R505E, R506E

GENERAL NOTES

MEASURE PAYMENT LENGTH BETWEEN THE OUTSIDE ENDS OF THE BARRIER.

CONCRETE BARRIER = 500 LBS./FT. (0.123 CU. YDS./FT.)

FINISH ALL EDGES OF BARRIER WITH ½" CHAMFER, EXCEPT WHERE OTHERWISE NOTED.

SPACE CONTROL JOINTS AT 10 FT. MAXIMUM. REFER TO SUPERSTRUCTURE SHEET FOR SPECIFIC SPACING INFORMATION.

GUARDRAIL CONNECTION TO BE STRUCTURAL STEEL, SPEC. 3306.

GUARDRAIL CONNECTION AND NAME PLATE TO BE CONSIDERED INCIDENTAL TO BARRIER.

BARRIER QUANTITIES ARE LISTED IN SUMMARY OF QUANTITIES FOR SUPERSTRUCTURE.

① PLACE BAR ON TOP OF BOTTOM REINFORCEMENT MAT IN DECK.

② JOINT SEALANT PER MnDOT APPROVED/QUALIFIED PRODUCTS LIST - CRACK AND JOINT MATERIALS - SILICONE JOINT SEALERS.

③ DIMENSIONS TO BE DETERMINED BASED ON THE BRIDGE DECK SLOPE.

④ REMOVE CONCRETE FROM PIPE ENDS AFTER SLIPFORMING OR FORM REMOVAL.

REVISION: MAY 10, 2017

APPROVED: AUGUST 24, 2016
Kevin Western
STATE BRIDGE ENGINEER

CERTIFIED BY _____ LICENSED PROFESSIONAL ENGINEER _____ DATE
NAME: LIC. NO.

TITLE: CONCRETE BARRIER 36" (TYPE S, TL-4)
INTEGRAL OR SEMI-INTEGRAL ABUTMENT WITH BRIDGE SLAB SIDEWALK AND GUARDRAIL CONNECTION (WITH 2" CONCRETE WEARING COURSE)

DES: DR: CHK: CHK:
SHEET NO. OF SHEETS

FIG. 5-397.138(D)
APPROVED:
BRIDGE NO.

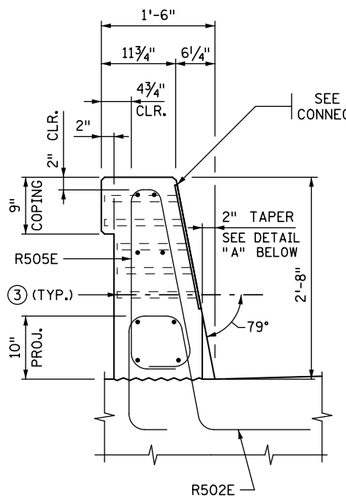

END VIEW

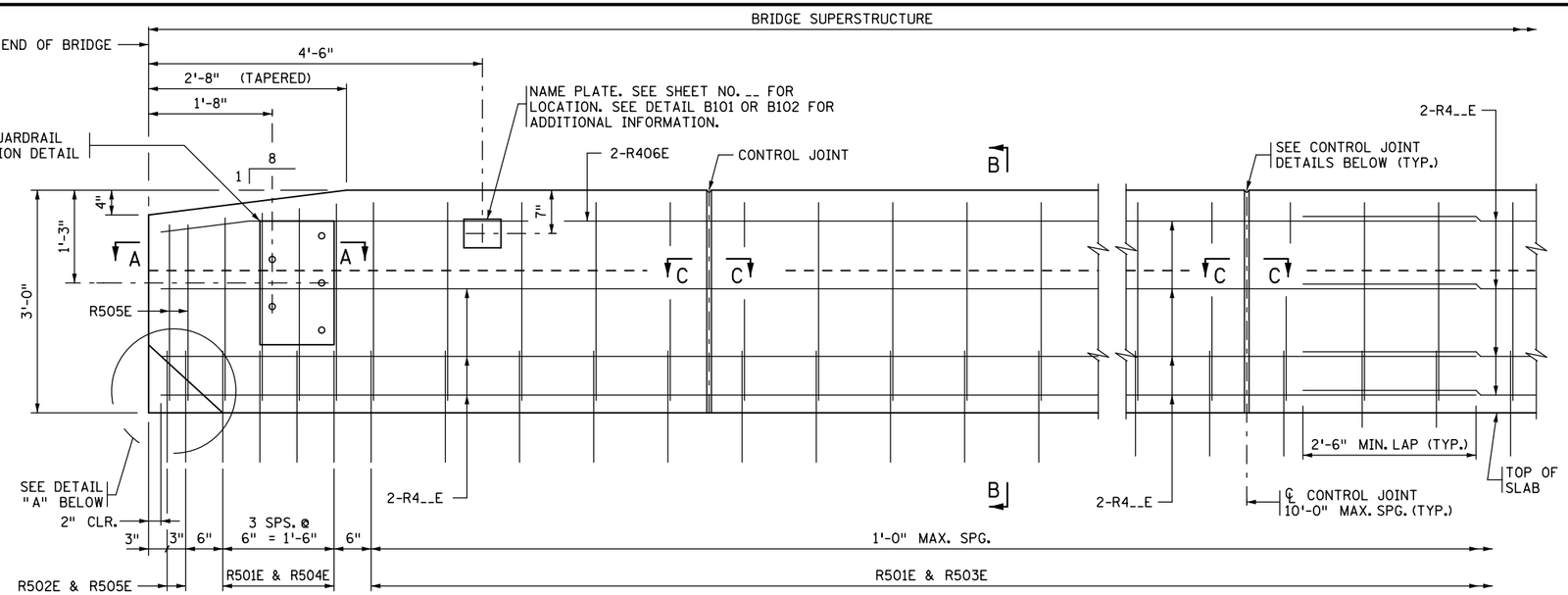

INSIDE ELEVATION OF BARRIER

CONTROL JOINT

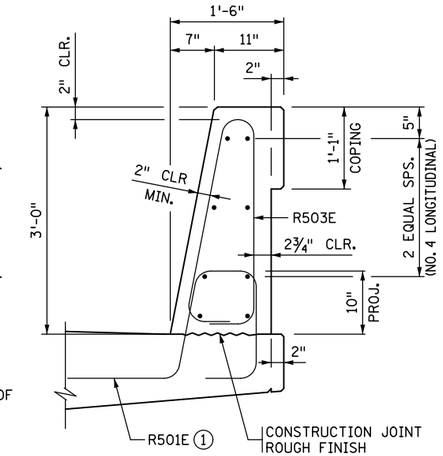

SECTION B-B

BILL OF REINFORCEMENT FOR BARRIER				
BAR	NO.	LENGTH	SHAPE	LOCATION
R501E		5'-8"		BARRIER DOWEL
R502E		5'-7"		BARRIER DOWEL
R503E		7'-1"		BARRIER VERTICAL
R504E	4 SER. OF 4	6'-7" TO 6'-11"		BARRIER VERTICAL
R505E		6'-5"		BARRIER VERTICAL
R406E		10'-3"		BARRIER LONGIT.
R4__E				BARRIER LONGIT.
R4__E				BARRIER LONGIT.
R4__E				BARRIER LONGIT.
R4__E				BARRIER LONGIT.
R4__E				BARRIER LONGIT.

DESIGNER NOTE
(REMOVE PRIOR TO PLOTTING FINAL PLAN):
REFER TO MEMO TO DESIGNERS (2016-01) FOR ADDITIONAL REQUIREMENTS REGARDING BARRIER PLACEMENT.

BARRIER MEETS TL-4 REQUIREMENTS OF NCHRP REPORT 350

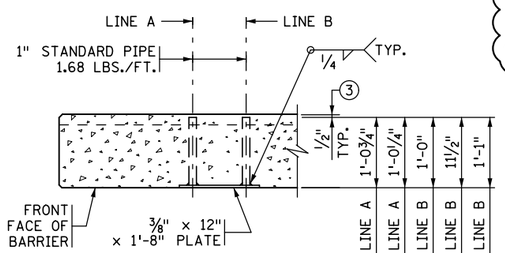

SECTION A-A

(REINFORCEMENT NOT SHOWN)

TRIM GUARDRAIL BOLTS SUCH THAT NO MORE THAN 1½" PROTRUDES FROM BACK FACE OF BARRIER.

☆ DIMENSIONS INCLUDE ⅜" PLATE

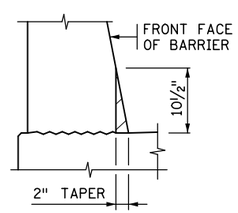

VIEW F-F

AT BARRIER END

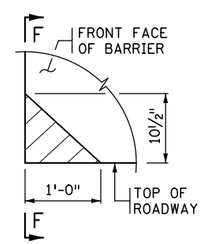

DETAIL "A"

ELEVATION VIEW

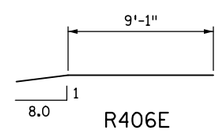

R406E

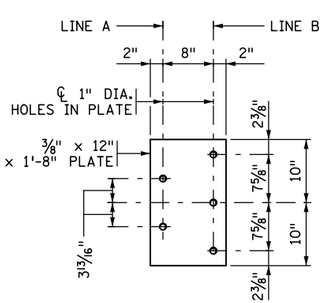

GUARDRAIL CONNECTION DETAIL

GALVANIZE AFTER FABRICATION PER SPEC. 3394
ESTIMATED WEIGHT = 34 LBS.

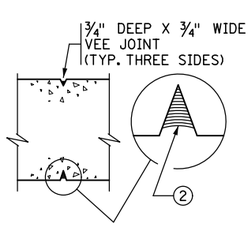

SECTION C-C

CAST-IN-PLACE CONSTRUCTION

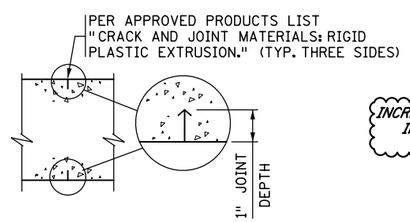

SECTION C-C

SLIPFORM CONSTRUCTION

CONTROL JOINT DETAILS

FOR SLIPFORM CONSTRUCTION: IMMEDIATELY AFTER CONCRETE IS PLACED AND WHILE IT IS STILL WET, CREATE A ONE INCH STRAIGHT GROOVE USING A TROWEL. INSERT RIGID PLASTIC EXTRUSION INTO GROOVE TO A DEPTH ⅛" BELOW THE SURFACE; FINISH OVER GROOVE COMPLETELY HIDING THE EXTRUSION.

INCREASE R501E VERTICAL LEGS IF DECK SLAB THICKNESS IS GREATER THAN 9".

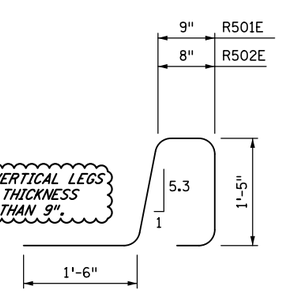

R501E, R502E

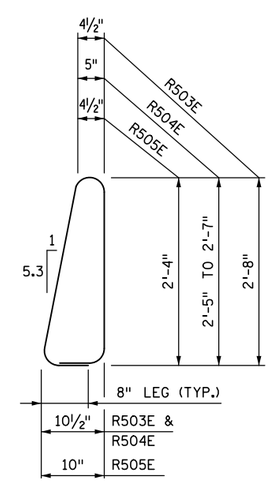

R503E, R504E, R505E

GENERAL NOTES

MEASURE PAYMENT LENGTH BETWEEN THE OUTSIDE ENDS OF THE BARRIER.

CONCRETE BARRIER = 496 LBS./FT. (0.123 CU. YDS./FT.)

FINISH ALL EDGES OF BARRIER WITH ½" CHAMFER, EXCEPT WHERE OTHERWISE NOTED.

SPACE CONTROL JOINTS AT 10 FT. MAXIMUM. REFER TO SUPERSTRUCTURE SHEET FOR SPECIFIC SPACING INFORMATION.

GUARDRAIL CONNECTION TO BE STRUCTURAL STEEL, SPEC. 3306.

GUARDRAIL CONNECTION AND NAME PLATE TO BE CONSIDERED INCIDENTAL TO BARRIER.

BARRIER QUANTITIES ARE LISTED IN SUMMARY OF QUANTITIES FOR SUPERSTRUCTURE.

① PLACE BAR ON TOP OF BOTTOM REINFORCEMENT MAT IN DECK.

② JOINT SEALANT PER MnDOT APPROVED/QUALIFIED PRODUCTS LIST - CRACK AND JOINT MATERIALS - SILICONE JOINT SEALERS.

③ REMOVE CONCRETE FROM PIPE ENDS AFTER SLIPFORMING OR FORM REMOVAL.

REVISION:

APPROVED: MAY 10, 2017
Kevin Western
STATE BRIDGE ENGINEER

CERTIFIED BY _____ LICENSED PROFESSIONAL ENGINEER _____ DATE
NAME: LIC. NO.

TITLE: CONCRETE BARRIER 36" (TYPE S, TL-4)
INTEGRAL OR SEMI-INTEGRAL ABUTMENT, (WITHOUT CONCRETE WEARING COURSE) NO APPROACH PANEL

DES: DR:
CHK: CHK:
SHEET NO. OF SHEETS

FIG. 5-397.138(E)

APPROVED:

BRIDGE NO.

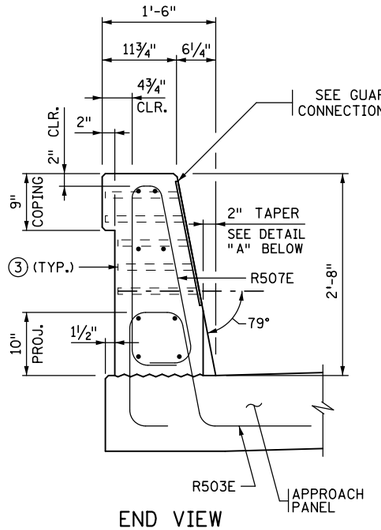

END VIEW

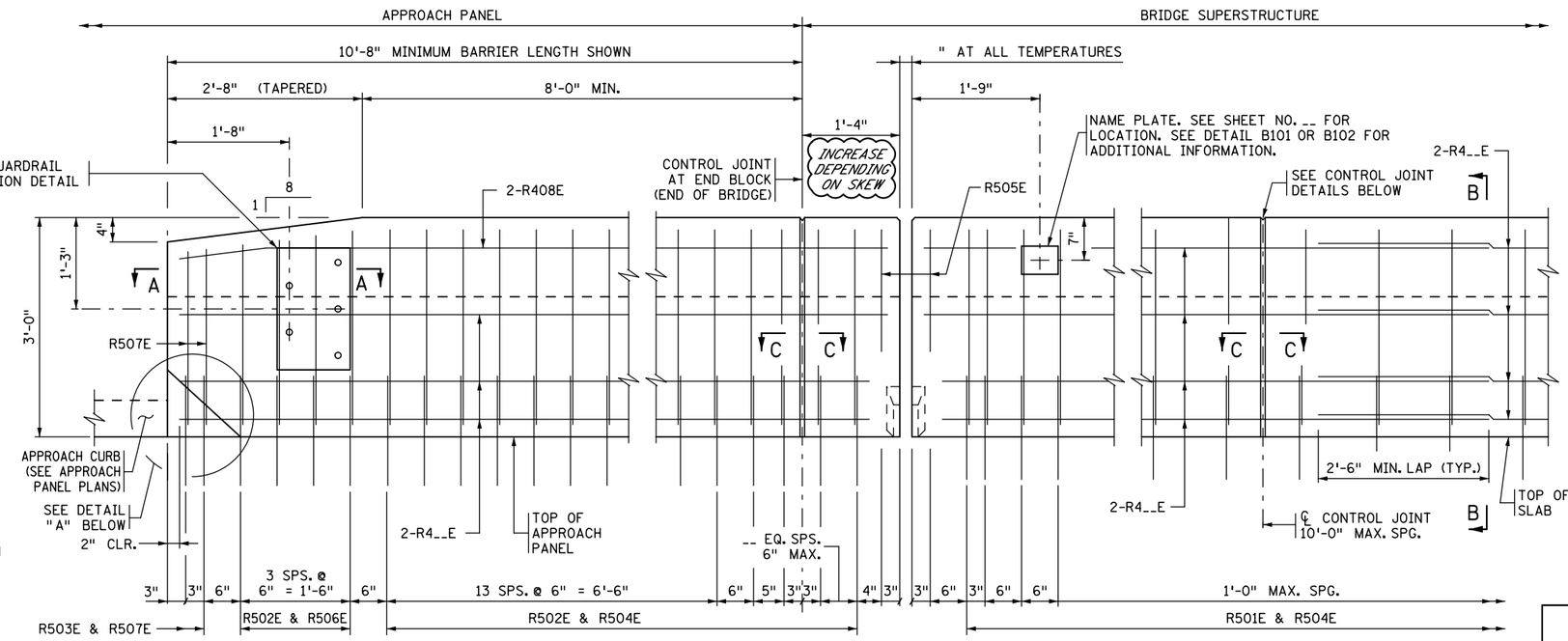

EXPANSION JOINT ④

EXPANSION DEVICE NOT SHOWN

CONTROL JOINT

INSIDE ELEVATION OF BARRIER

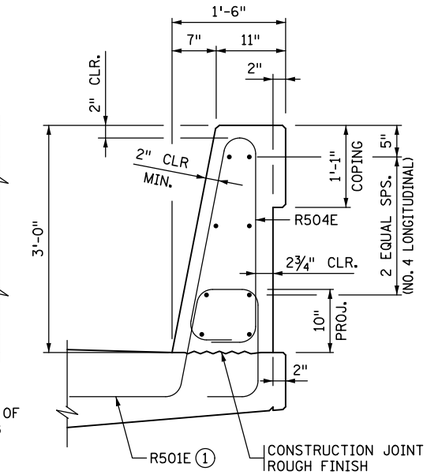

SECTION B-B

BILL OF REINFORCEMENT FOR BARRIER				
BAR	NO.	LENGTH	SHAPE	LOCATION
R501E		5'-7"		BARRIER DOWEL
R502E		5'-9"		BARRIER DOWEL
R503E		5'-8"		BARRIER DOWEL
R504E		7'-1"		BARRIER VERTICAL
R505E		5'-1"		BARRIER VERTICAL
R506E	-- SER. OF 4	6'-7" TO 6'-11"		BARRIER VERTICAL
R507E		6'-5"		BARRIER VERTICAL
R408E		11'-7"		BARRIER LONGIT.
R4__E				BARRIER LONGIT.
R4__E				BARRIER LONGIT.
R4__E				BARRIER LONGIT.
R4__E				BARRIER LONGIT.

BARRIER MEETS NCHRP 350 TL-4 REQUIREMENTS ON BRIDGE DECK AND TL-3 ON APPROACH PANEL.

DESIGNER NOTE
(REMOVE PRIOR TO PLOTTING FINAL PLAN):

MINIMUM BARRIER LENGTH ON APPROACH PANEL IS 10'-8" WITH MINIMUM OF 22 R502E AND R503E DOWELS WITH ACCOMPANYING APPROPRIATE BARRIER VERTICAL BARS, 12" MAX. SPACING.
VERIFY APPROACH BARRIER LENGTH, NEED FOR A GUARDRAIL CONNECTION, AND VERTICAL TAPER WITH ROADWAY DESIGNER.
REFER TO MEMO TO DESIGNERS (2016-01) FOR ADDITIONAL REQUIREMENTS REGARDING BARRIER PLACEMENT.

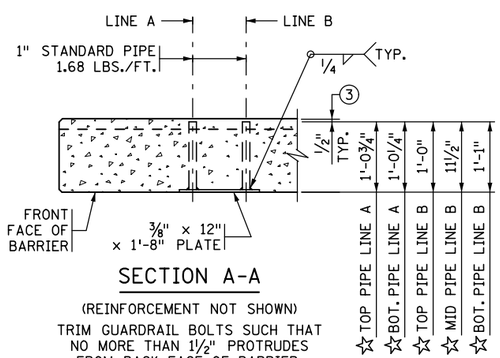

SECTION A-A

(REINFORCEMENT NOT SHOWN)

TRIM GUARDRAIL BOLTS SUCH THAT NO MORE THAN 1½" PROTRUDES FROM BACK FACE OF BARRIER.

☆ DIMENSIONS INCLUDE ⅜" PLATE

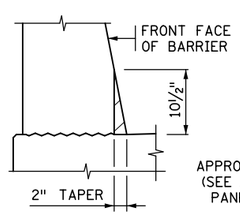

VIEW F-F

AT BARRIER END

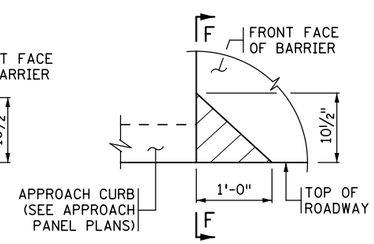

DETAIL "A"

ELEVATION VIEW

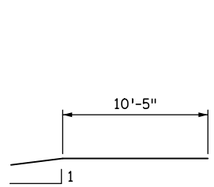

R408E

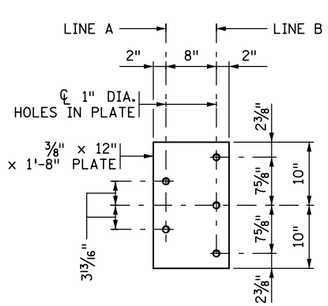

GUARDRAIL CONNECTION DETAIL

GALVANIZE AFTER FABRICATION PER SPEC. 3394
ESTIMATED WEIGHT = 34 LBS.

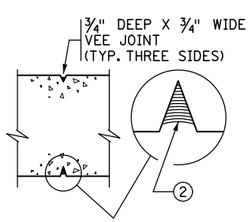

SECTION C-C

CAST-IN-PLACE CONSTRUCTION

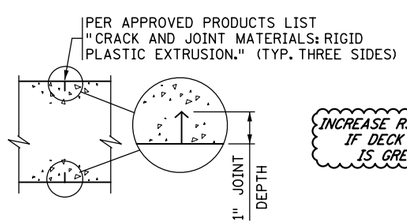

SECTION C-C

SLIPFORM CONSTRUCTION

CONTROL JOINT DETAILS

FOR SLIPFORM CONSTRUCTION: IMMEDIATELY AFTER CONCRETE IS PLACED AND WHILE IT IS STILL WET, CREATE A ONE INCH STRAIGHT GROOVE USING A TROWEL. INSERT RIGID PLASTIC EXTRUSION INTO GROOVE TO A DEPTH ⅛" BELOW THE SURFACE; FINISH OVER GROOVE COMPLETELY HIDING THE EXTRUSION.

INCREASE R501E VERTICAL LEGS IF DECK SLAB THICKNESS IS GREATER THAN 9".

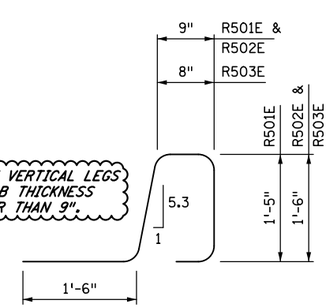

R501E, R502E, R503E

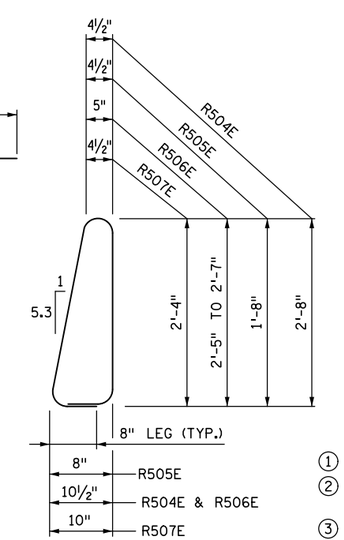

R504E, R505E, R506E, R507E

GENERAL NOTES

MEASURE PAYMENT LENGTH BETWEEN THE OUTSIDE ENDS OF THE BARRIER.

CONCRETE BARRIER = 496 LBS./FT. (0.123 CU. YDS./FT.)

FINISH ALL EDGES OF BARRIER WITH ½" CHAMFER, EXCEPT WHERE OTHERWISE NOTED.

SPACE CONTROL JOINTS AT 10 FT. MAXIMUM. REFER TO SUPERSTRUCTURE SHEET FOR SPECIFIC SPACING INFORMATION.

GUARDRAIL CONNECTION TO BE STRUCTURAL STEEL, SPEC. 3306.

GUARDRAIL CONNECTION AND NAME PLATE TO BE CONSIDERED INCIDENTAL TO BARRIER.

BARRIER QUANTITIES ARE LISTED IN SUMMARY OF QUANTITIES FOR SUPERSTRUCTURE.

① PLACE BAR ON TOP OF BOTTOM REINFORCEMENT MAT IN DECK.

② JOINT SEALANT PER MnDOT APPROVED/QUALIFIED PRODUCTS LIST - CRACK AND JOINT MATERIALS - SILICONE JOINT SEALERS.

③ REMOVE CONCRETE FROM PIPE ENDS AFTER SLIPFORMING OR FORM REMOVAL.

④ REFER TO "WATERPROOF EXPANSION DEVICE" STANDARD PLANS FOR COVER PLATE DETAILS.

REVISION: MAY 10, 2017

APPROVED: AUGUST 24, 2016

Kevin Western

STATE BRIDGE ENGINEER

CERTIFIED BY _____ LICENSED PROFESSIONAL ENGINEER _____ DATE

NAME: LIC. NO.

TITLE: CONCRETE BARRIER 36" (TYPE S, TL-4)

PARAPET ABUTMENT WITH GUARDRAIL CONNECTION (WITHOUT CONCRETE WEARING COURSE)

DES: DR: CHK: CHK:

SHEET NO. OF SHEETS

APPROVED:

FIG. 5-397.139(A)

BRIDGE NO.

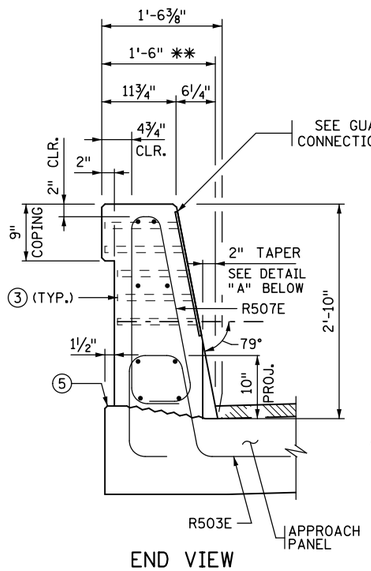

END VIEW

** DIMENSION SHOWN IS TO THE TOP OF THE WEARING COURSE AT GUTTERLINE.

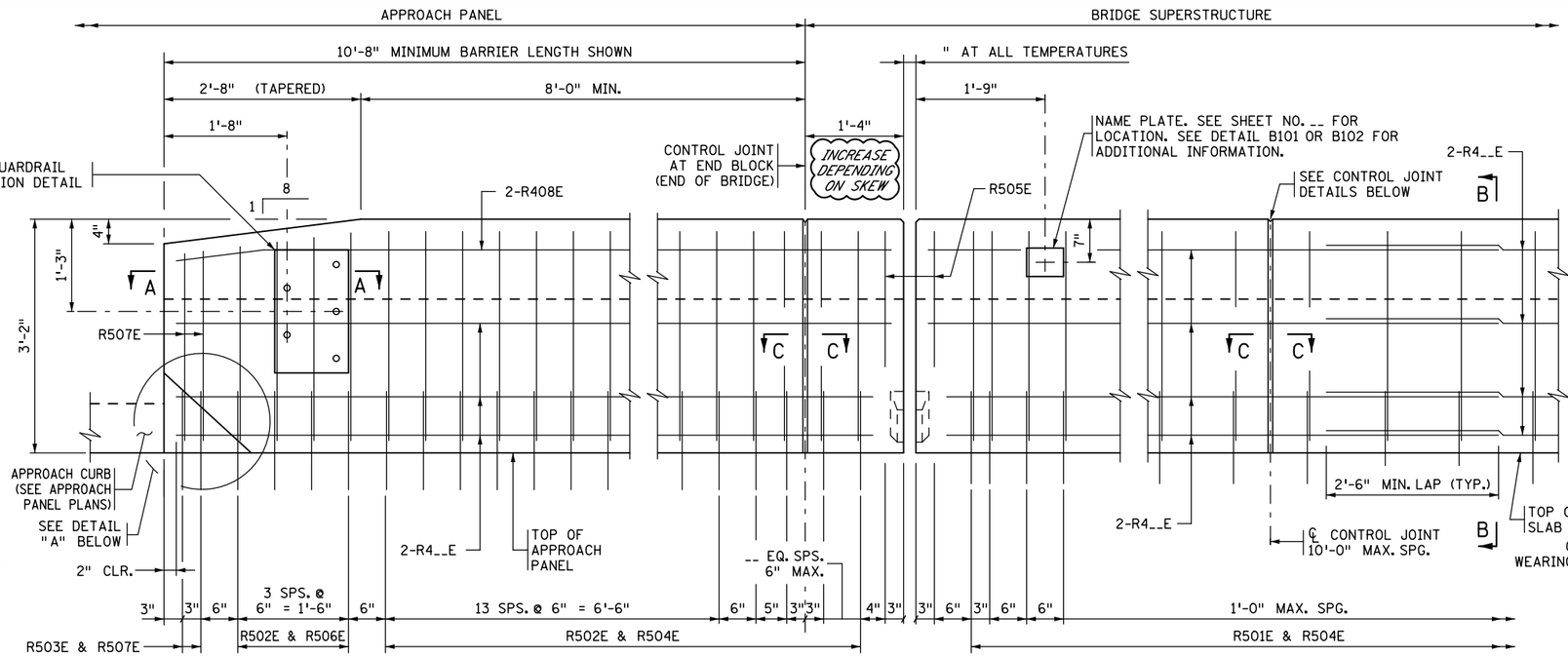

EXPANSION JOINT ④

EXPANSION DEVICE NOT SHOWN

CONTROL JOINT

INSIDE ELEVATION OF BARRIER

CONCRETE WEARING COURSE NOT SHOWN

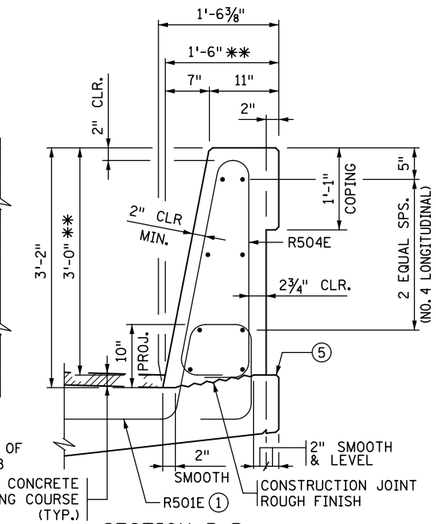

SECTION B-B

** DIMENSION SHOWN IS TO THE TOP OF THE WEARING COURSE AT GUTTERLINE.

BARRIER MEETS NCHRP 350 TL-4 REQUIREMENTS ON BRIDGE DECK AND TL-3 ON APPROACH PANEL.

BILL OF REINFORCEMENT FOR BARRIER

BAR	NO.	LENGTH	SHAPE	LOCATION
R501E		5'-4"		BARRIER DOWEL
R502E		5'-6"		BARRIER DOWEL
R503E		5'-5"		BARRIER DOWEL
R504E		7'-5"		BARRIER VERTICAL
R505E		5'-5"		BARRIER VERTICAL
R506E	-- SER. OF 4	6'-11" TO 7'-3"		BARRIER VERTICAL
R507E		6'-9"		BARRIER VERTICAL
R408E		11'-7"		BARRIER LONGIT.
R4__E				BARRIER LONGIT.
R4__E				BARRIER LONGIT.
R4__E				BARRIER LONGIT.
R4__E				BARRIER LONGIT.
R4__E				BARRIER LONGIT.

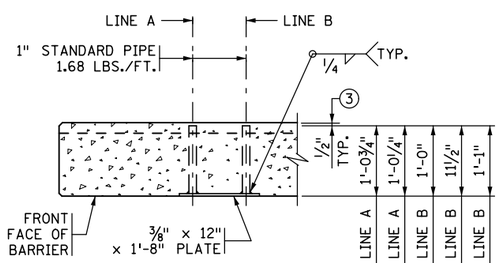

SECTION A-A

(REINFORCEMENT NOT SHOWN)

TRIM GUARDRAIL BOLTS SUCH THAT NO MORE THAN 1½" PROTRUDES FROM BACK FACE OF BARRIER.

☆ DIMENSIONS INCLUDE ⅜" PLATE

DESIGNER NOTE
(REMOVE PRIOR TO PLOTTING FINAL PLAN):

MINIMUM BARRIER LENGTH ON APPROACH PANEL IS 10'-8" WITH MINIMUM OF 22 R502E AND R503E DOWELS WITH ACCOMPANYING APPROPRIATE BARRIER VERTICAL BARS, 12" MAX. SPACING.
VERIFY APPROACH BARRIER LENGTH, NEED FOR A GUARDRAIL CONNECTION, AND VERTICAL TAPER WITH ROADWAY DESIGNER.
REFER TO MEMO TO DESIGNERS (2016-01) FOR ADDITIONAL REQUIREMENTS REGARDING BARRIER PLACEMENT AND LINK WITH ADJACENT RETAINING WALLS.

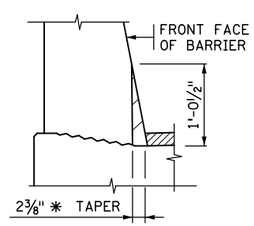

VIEW F-F

AT BARRIER END

✳ AT TOP OF STRUCTURAL SLAB

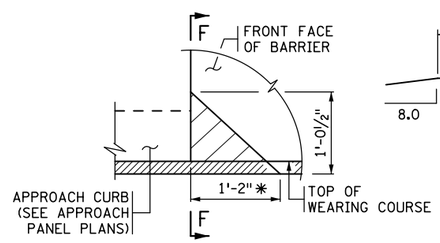

DETAIL "A"

ELEVATION VIEW

(WEARING COURSE SHOWN)

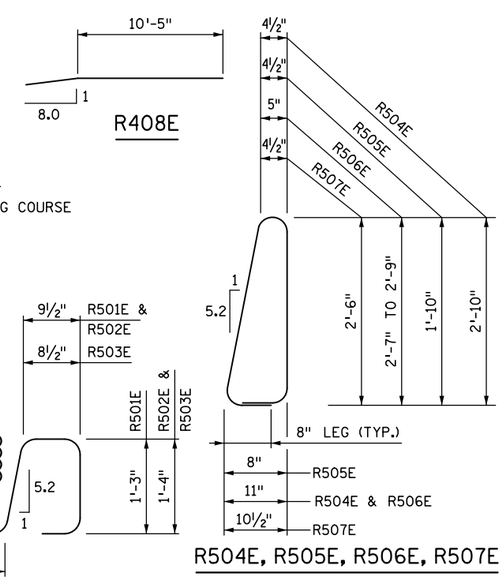

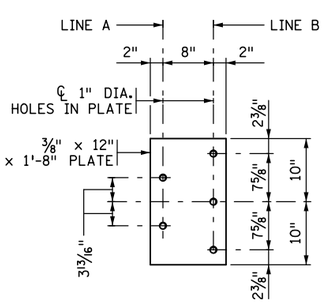

GUARDRAIL CONNECTION DETAIL

GALVANIZE AFTER FABRICATION PER SPEC. 3394

ESTIMATED WEIGHT = 34 LBS.

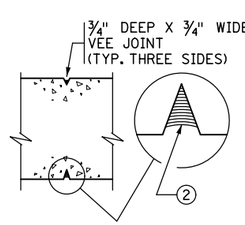

SECTION C-C

CAST-IN-PLACE CONSTRUCTION

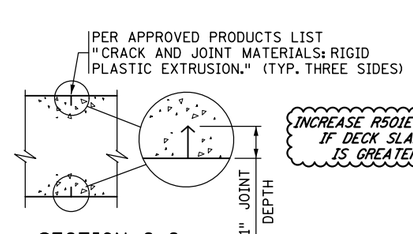

SECTION C-C

SLIPFORM CONSTRUCTION

CONTROL JOINT DETAILS

FOR SLIPFORM CONSTRUCTION: IMMEDIATELY AFTER CONCRETE IS PLACED AND WHILE IT IS STILL WET, CREATE A ONE INCH STRAIGHT GROOVE USING A TROWEL. INSERT RIGID PLASTIC EXTRUSION INTO GROOVE TO A DEPTH ⅛" BELOW THE SURFACE; FINISH OVER GROOVE COMPLETELY HIDING THE EXTRUSION.

GENERAL NOTES

MEASURE PAYMENT LENGTH BETWEEN THE OUTSIDE ENDS OF THE BARRIER.

CONCRETE BARRIER = 513 LBS./FT. (0.127 CU. YDS./FT.)

FINISH ALL EDGES OF BARRIER WITH ½" CHAMFER, EXCEPT WHERE OTHERWISE NOTED.

SPACE CONTROL JOINTS AT 10 FT. MAXIMUM. REFER TO SUPERSTRUCTURE SHEET FOR SPECIFIC SPACING INFORMATION.

GUARDRAIL CONNECTION TO BE STRUCTURAL STEEL, SPEC. 3306.

GUARDRAIL CONNECTION AND NAME PLATE TO BE CONSIDERED INCIDENTAL TO BARRIER.

BARRIER QUANTITIES ARE LISTED IN SUMMARY OF QUANTITIES FOR SUPERSTRUCTURE.

① PLACE BAR ON TOP OF BOTTOM REINFORCEMENT MAT IN DECK.

② JOINT SEALANT PER MnDOT APPROVED/QUALIFIED PRODUCTS LIST - CRACK AND JOINT MATERIALS - SILICONE JOINT SEALERS.

③ REMOVE CONCRETE FROM PIPE ENDS AFTER SLIPFORMING OR FORM REMOVAL.

④ REFER TO "WATERPROOF EXPANSION DEVICE" STANDARD PLANS FOR COVER PLATE DETAILS.

⑤ MATCH GUTTERLINE ELEVATION.

REVISION: MAY 10, 2017

APPROVED: AUGUST 24, 2016

Kevin Western

STATE BRIDGE ENGINEER

CERTIFIED BY _____ LICENSED PROFESSIONAL ENGINEER _____ DATE

NAME: LIC. NO.

TITLE: CONCRETE BARRIER 36" (TYPE S, TL-4)

PARAPET ABUTMENT WITH GUARDRAIL CONNECTION (WITH 2" CONCRETE WEARING COURSE)

DES: DR: CHK: CHK:

SHEET NO. OF SHEETS

APPROVED:

FIG. 5-397.139(B)

BRIDGE NO.

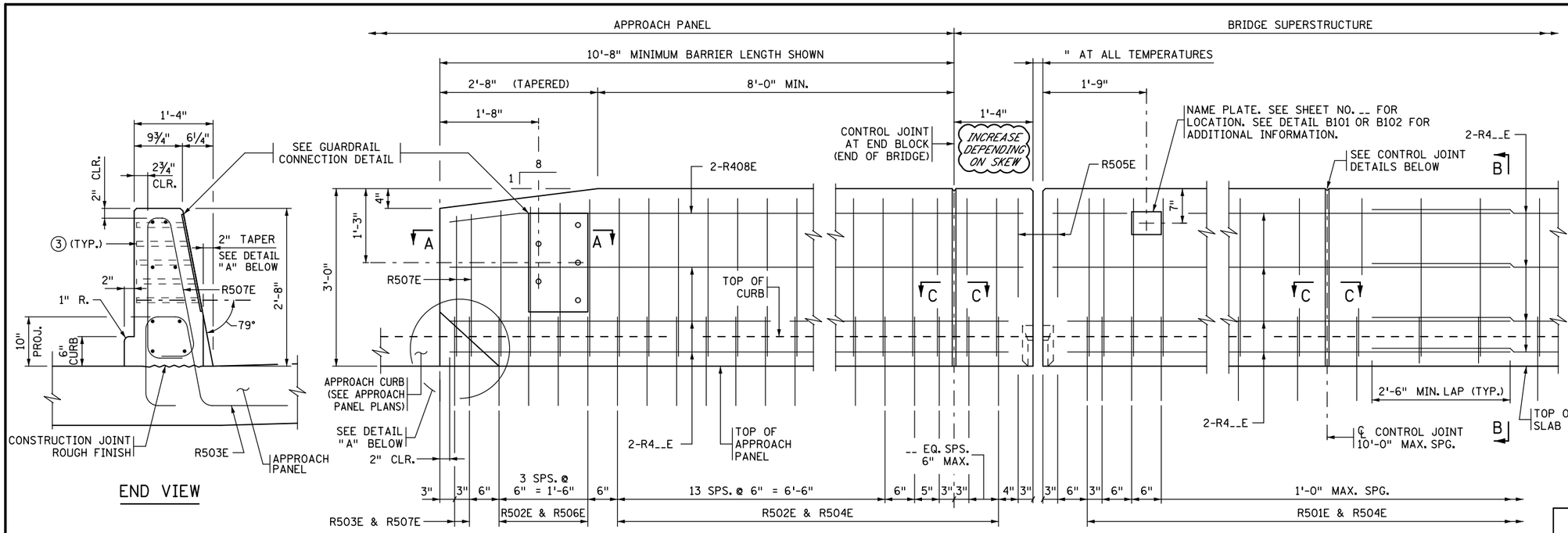

END VIEW

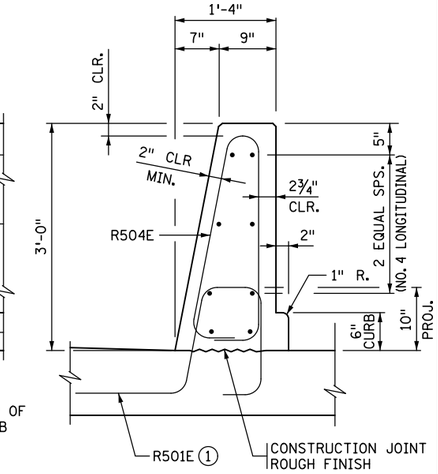

SECTION B-B

EXPANSION JOINT ④

EXPANSION DEVICE NOT SHOWN

CONTROL JOINT

INSIDE ELEVATION OF BARRIER

DESIGNER NOTE
(REMOVE PRIOR TO PLOTTING FINAL PLAN):

MINIMUM BARRIER LENGTH ON APPROACH PANEL IS 10'-8" WITH MINIMUM OF 22 R502E AND R503E DOWELS WITH ACCOMPANYING APPROPRIATE BARRIER VERTICAL BARS, 12" MAX. SPACING.
VERIFY APPROACH BARRIER LENGTH, NEED FOR A GUARDRAIL CONNECTION, AND VERTICAL TAPER WITH ROADWAY DESIGNER.
REFER TO MEMO TO DESIGNERS (2016-01) FOR ADDITIONAL REQUIREMENTS REGARDING BARRIER PLACEMENT.

BARRIER MEETS NCHRP 350 TL-4 REQUIREMENTS ON BRIDGE DECK AND TL-3 ON APPROACH PANEL.

BILL OF REINFORCEMENT FOR BARRIER

BAR	NO.	LENGTH	SHAPE	LOCATION
R501E		5'-7"		BARRIER DOWEL
R502E		5'-9"		BARRIER DOWEL
R503E		5'-8"		BARRIER DOWEL
R504E		7'-1"		BARRIER VERTICAL
R505E		5'-1"		BARRIER VERTICAL
R506E	-- SER. OF 4	6'-7" TO 6'-11"		BARRIER VERTICAL
R507E		6'-5"		BARRIER VERTICAL
R408E		11'-7"		BARRIER LONGIT.
R4__E				BARRIER LONGIT.
R4__E				BARRIER LONGIT.
R4__E				BARRIER LONGIT.
R4__E				BARRIER LONGIT.
R4__E				BARRIER LONGIT.

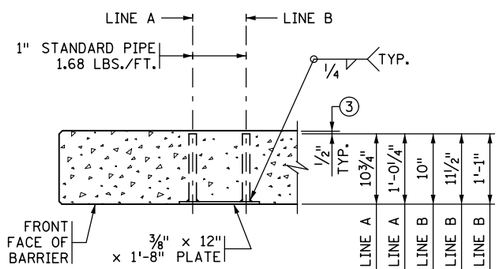

SECTION A-A

(REINFORCEMENT NOT SHOWN)

TRIM GUARDRAIL BOLTS SUCH THAT NO MORE THAN 1½" PROTRUDES FROM BACK FACE OF BARRIER.

☆ DIMENSIONS INCLUDE ⅜" PLATE

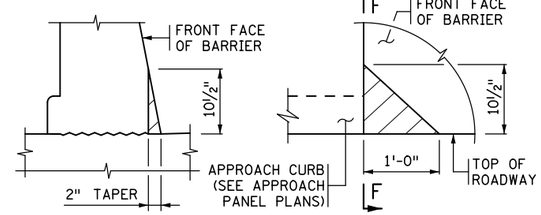

VIEW F-F

AT BARRIER END

DETAIL "A"

ELEVATION VIEW

R408E

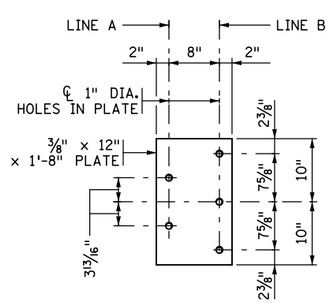

GUARDRAIL CONNECTION DETAIL

GALVANIZE AFTER FABRICATION PER SPEC. 3394
ESTIMATED WEIGHT = 34 LBS.

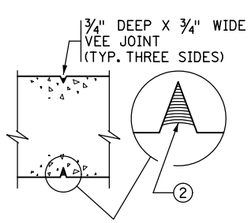

SECTION C-C

CAST-IN-PLACE CONSTRUCTION

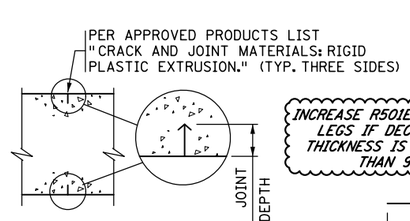

SECTION C-C

SLIPFORM CONSTRUCTION

CONTROL JOINT DETAILS

FOR SLIPFORM CONSTRUCTION: IMMEDIATELY AFTER CONCRETE IS PLACED AND WHILE IT IS STILL WET, CREATE A ONE INCH STRAIGHT GROOVE USING A TROWEL. INSERT RIGID PLASTIC EXTRUSION INTO GROOVE TO A DEPTH ⅛" BELOW THE SURFACE; FINISH OVER GROOVE COMPLETELY HIDING THE EXTRUSION.

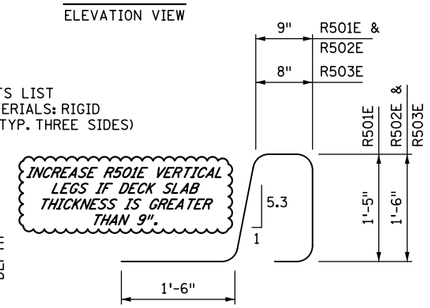

R501E, R502E, R503E

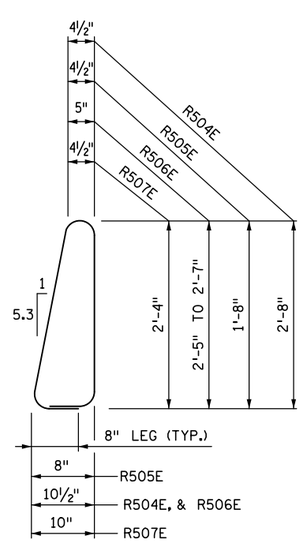

R504E, R505E, R506E, R507E

GENERAL NOTES

MEASURE PAYMENT LENGTH BETWEEN THE OUTSIDE ENDS OF THE BARRIER.

CONCRETE BARRIER = 481 LBS./FT. (0.119 CU. YDS./FT.)

FINISH ALL EDGES OF BARRIER WITH ½" CHAMFER, EXCEPT WHERE OTHERWISE NOTED.

SPACE CONTROL JOINTS AT 10 FT. MAXIMUM. REFER TO SUPERSTRUCTURE SHEET FOR SPECIFIC SPACING INFORMATION.

GUARDRAIL CONNECTION TO BE STRUCTURAL STEEL, SPEC. 3306.

GUARDRAIL CONNECTION AND NAME PLATE TO BE CONSIDERED INCIDENTAL TO BARRIER.

BARRIER QUANTITIES ARE LISTED IN SUMMARY OF QUANTITIES FOR SUPERSTRUCTURE.

① PLACE BAR ON TOP OF BOTTOM REINFORCEMENT MAT IN DECK.

② JOINT SEALANT PER MnDOT APPROVED/QUALIFIED PRODUCTS LIST - CRACK AND JOINT MATERIALS - SILICONE JOINT SEALERS.

③ REMOVE CONCRETE FROM PIPE ENDS AFTER SLIPFORMING OR FORM REMOVAL.

④ REFER TO "WATERPROOF EXPANSION DEVICE" STANDARD PLANS FOR COVER PLATE DETAILS.

REVISION: MAY 10, 2017

APPROVED: AUGUST 24, 2016

Kevin Western

STATE BRIDGE ENGINEER

CERTIFIED BY _____ LICENSED PROFESSIONAL ENGINEER _____ DATE

NAME: LIC. NO.

TITLE: CONCRETE BARRIER 36" (TYPE S, TL-4)

PARAPET ABUTMENT WITH BRIDGE SLAB SIDEWALK AND GUARDRAIL CONNECTION (WITHOUT CONCRETE WEARING COURSE)

DES: DR: CHK: CHK:

SHEET NO. OF SHEETS

APPROVED:

FIG. 5-397.139(C)

BRIDGE NO.

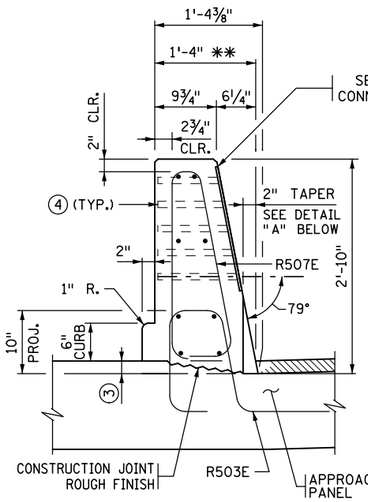

END VIEW

** DIMENSION SHOWN IS TO THE TOP OF THE WEARING COURSE AT GUTTERLINE.

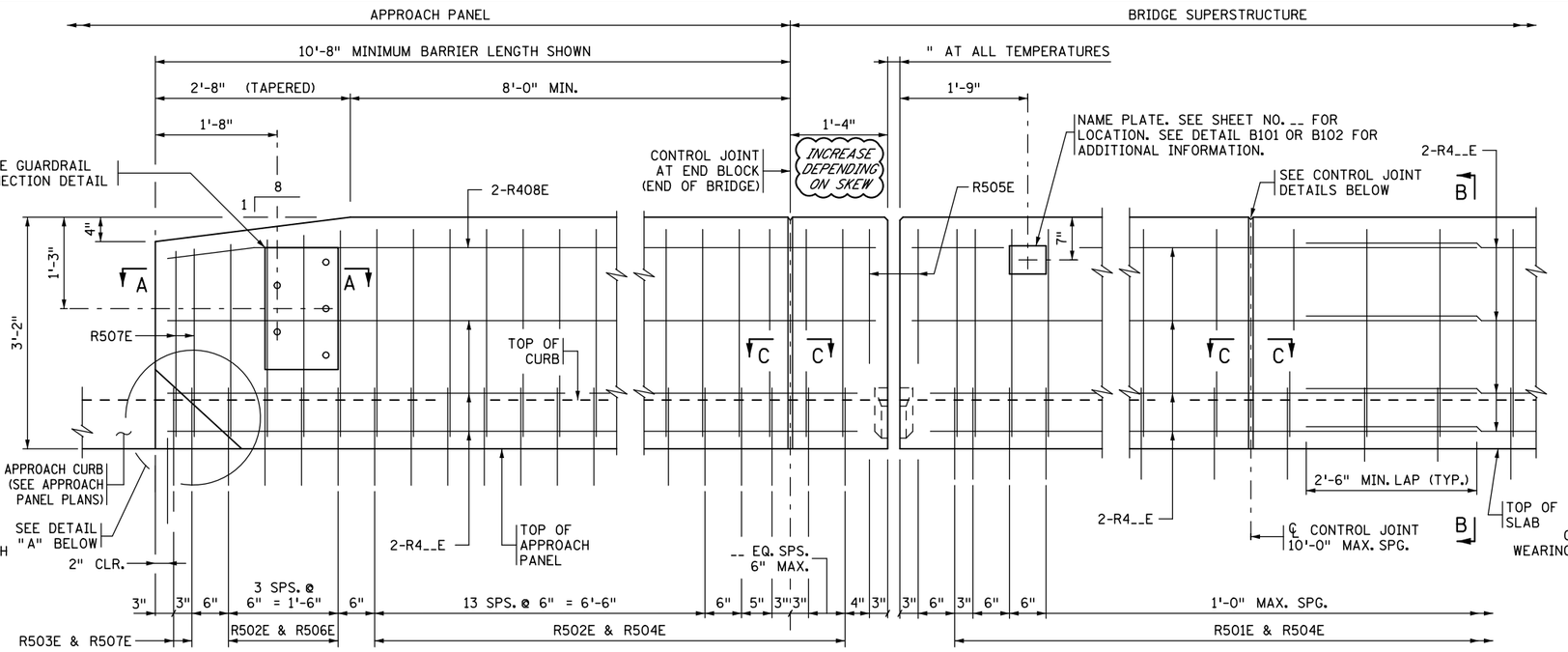

EXPANSION JOINT ⑤

EXPANSION DEVICE NOT SHOWN

CONTROL JOINT

INSIDE ELEVATION OF BARRIER

CONCRETE WEARING COURSE NOT SHOWN

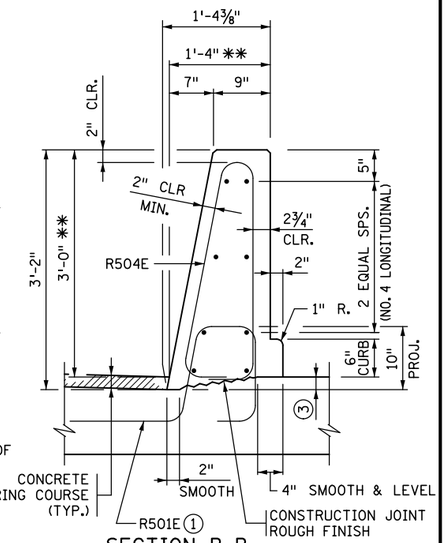

SECTION B-B

** DIMENSION SHOWN IS TO THE TOP OF THE WEARING COURSE AT GUTTERLINE.

BILL OF REINFORCEMENT FOR BARRIER

BAR	NO.	LENGTH	SHAPE	LOCATION
R501E		5'-4"		BARRIER DOWEL
R502E		5'-6"		BARRIER DOWEL
R503E		5'-5"		BARRIER DOWEL
R504E		7'-5"		BARRIER VERTICAL
R505E		5'-5"		BARRIER VERTICAL
R506E	-- SER. OF 4	6'-11" TO 7'-3"		BARRIER VERTICAL
R507E		6'-9"		BARRIER VERTICAL
R408E		11'-7"		BARRIER LONGIT.
R4__E				BARRIER LONGIT.
R4__E				BARRIER LONGIT.
R4__E				BARRIER LONGIT.
R4__E				BARRIER LONGIT.
R4__E				BARRIER LONGIT.

DESIGNER NOTE
(REMOVE PRIOR TO PLOTTING FINAL PLAN):

MINIMUM BARRIER LENGTH ON APPROACH PANEL IS 10'-8" WITH MINIMUM OF 22 R502E AND R503E DOWELS WITH ACCOMPANYING APPROPRIATE BARRIER VERTICAL BARS, 12" MAX. SPACING.
VERIFY APPROACH BARRIER LENGTH, NEED FOR A GUARDRAIL CONNECTION, AND VERTICAL TAPER WITH ROADWAY DESIGNER.
REFER TO MEMO TO DESIGNERS (2016-01) FOR ADDITIONAL REQUIREMENTS REGARDING BARRIER PLACEMENT AND LINK WITH ADJACENT RETAINING WALLS.

BARRIER MEETS NCHRP 350 TL-4 REQUIREMENTS ON BRIDGE DECK AND TL-3 ON APPROACH PANEL.

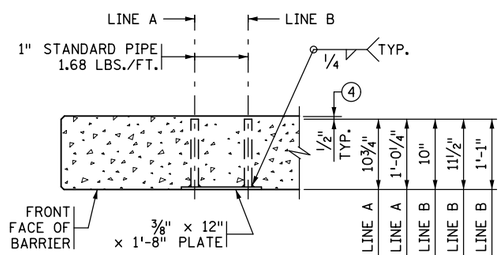

SECTION A-A

(REINFORCEMENT NOT SHOWN)

TRIM GUARDRAIL BOLTS SUCH THAT NO MORE THAN 1½" PROTRUDES FROM BACK FACE OF BARRIER.

☆ DIMENSIONS INCLUDE ⅜" PLATE

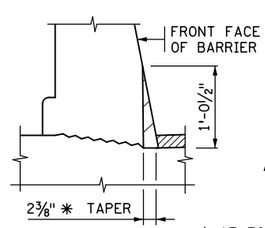

VIEW F-F

AT BARRIER END

* AT TOP OF STRUCTURAL SLAB

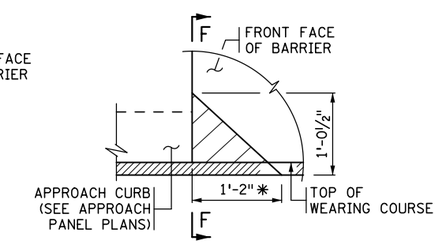

DETAIL "A"

ELEVATION VIEW (WEARING COURSE SHOWN)

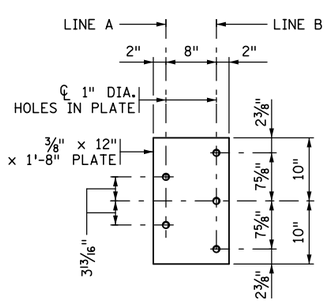

GUARDRAIL CONNECTION DETAIL

GALVANIZE AFTER FABRICATION PER SPEC. 3394
ESTIMATED WEIGHT = 34 LBS.

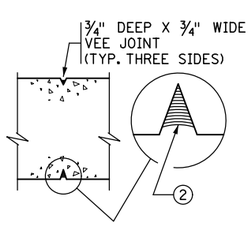

SECTION C-C

CAST-IN-PLACE CONSTRUCTION

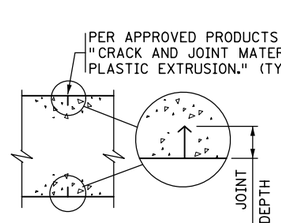

SECTION C-C

SLIPFORM CONSTRUCTION

CONTROL JOINT DETAILS

FOR SLIPFORM CONSTRUCTION: IMMEDIATELY AFTER CONCRETE IS PLACED AND WHILE IT IS STILL WET, CREATE A ONE INCH STRAIGHT GROOVE USING A TROWEL. INSERT RIGID PLASTIC EXTRUSION INTO GROOVE TO A DEPTH ⅛" BELOW THE SURFACE; FINISH OVER GROOVE COMPLETELY HIDING THE EXTRUSION.

INCREASE R501E VERTICAL LEGS IF DECK SLAB THICKNESS IS GREATER THAN 9".

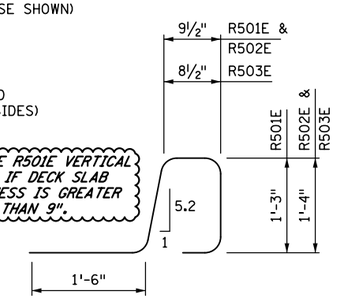

R501E, R502E, R503E

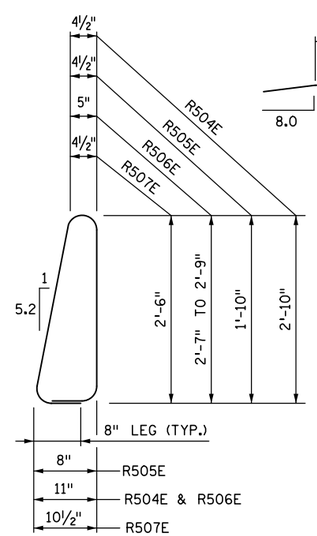

R504E, R505E, R506E, R507E

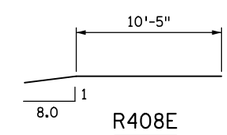

R408E

GENERAL NOTES

MEASURE PAYMENT LENGTH BETWEEN THE OUTSIDE ENDS OF THE BARRIER.

CONCRETE BARRIER = 500 LBS./FT. (0.123 CU. YDS./FT.)

FINISH ALL EDGES OF BARRIER WITH ½" CHAMFER, EXCEPT WHERE OTHERWISE NOTED.

SPACE CONTROL JOINTS AT 10 FT. MAXIMUM. REFER TO SUPERSTRUCTURE SHEET FOR SPECIFIC SPACING INFORMATION.

GUARDRAIL CONNECTION TO BE STRUCTURAL STEEL, SPEC. 3306.

GUARDRAIL CONNECTION AND NAME PLATE TO BE CONSIDERED INCIDENTAL TO BARRIER.

BARRIER QUANTITIES ARE LISTED IN SUMMARY OF QUANTITIES FOR SUPERSTRUCTURE.

① PLACE BAR ON TOP OF BOTTOM REINFORCEMENT MAT IN DECK.

② JOINT SEALANT PER MnDOT APPROVED/QUALIFIED PRODUCTS LIST - CRACK AND JOINT MATERIALS - SILICONE JOINT SEALERS.

③ DIMENSIONS TO BE DETERMINED BASED ON THE BRIDGE DECK SLOPE.

④ REMOVE CONCRETE FROM PIPE ENDS AFTER SLIPFORMING OR FORM REMOVAL.

⑤ REFER TO "WATERPROOF EXPANSION DEVICE" STANDARD PLANS FOR COVER PLATE DETAILS.

FIG. 5-397.139(D)

REVISION: MAY 10, 2017

APPROVED: AUGUST 24, 2016

Kevin Western

STATE BRIDGE ENGINEER

CERTIFIED BY _____ LICENSED PROFESSIONAL ENGINEER _____ DATE

NAME: LIC. NO.

TITLE: CONCRETE BARRIER 36" (TYPE S, TL-4)
PARAPET ABUTMENT WITH BRIDGE SLAB SIDEWALK AND GUARDRAIL CONNECTION (WITH 2" CONCRETE WEARING COURSE)

DES: DR: CHK: CHK:

APPROVED:

SHEET NO. OF SHEETS

BRIDGE NO.

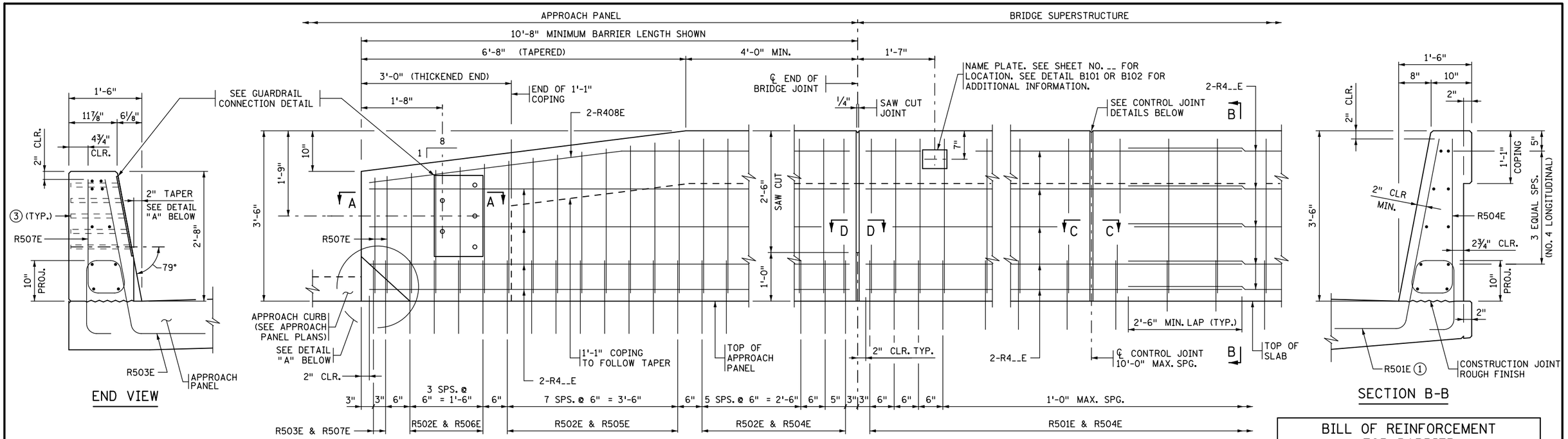

END VIEW

JOINT AT ABUTMENT

(INTEGRAL OR SEMI-INTEGRAL ABUTMENT)

CONTROL JOINT

SECTION B-B

INSIDE ELEVATION OF BARRIER

BARRIER MEETS NCHRP 350 TL-4 REQUIREMENTS ON BRIDGE DECK AND TL-3 ON APPROACH PANEL.

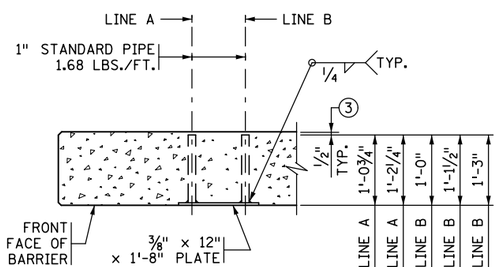

SECTION A-A

(REINFORCEMENT NOT SHOWN)

TRIM GUARDRAIL BOLTS SUCH THAT NO MORE THAN 1 1/2" PROTRUDES FROM BACK FACE OF BARRIER.

☆ DIMENSIONS INCLUDE 3/8" PLATE

DESIGNER NOTE
(REMOVE PRIOR TO PLOTTING FINAL PLAN):

MINIMUM BARRIER LENGTH ON APPROACH PANEL IS 10'-8" WITH MINIMUM OF 22 R502E AND R503E DOWELS WITH ACCOMPANYING APPROPRIATE BARRIER VERTICAL BARS, 12" MAX. SPACING.
VERIFY APPROACH BARRIER LENGTH, NEED FOR A GUARDRAIL CONNECTION, AND VERTICAL TAPER WITH ROADWAY DESIGNER.
REFER TO MEMO TO DESIGNERS (2016-01) FOR ADDITIONAL REQUIREMENTS REGARDING BARRIER PLACEMENT.

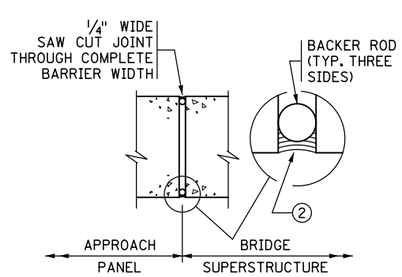

SECTION D-D

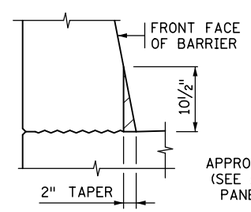

VIEW F-F

AT BARRIER END

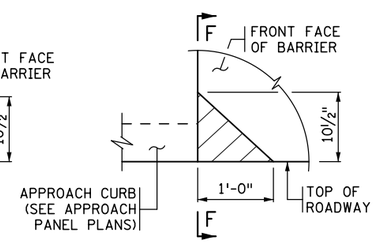

DETAIL "A"

ELEVATION VIEW

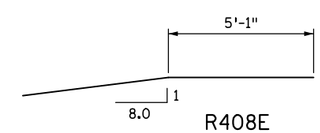

R408E

BILL OF REINFORCEMENT FOR BARRIER				
BAR	NO.	LENGTH	SHAPE	LOCATION
R501E		5'-7"		BARRIER DOWEL
R502E		5'-9"		BARRIER DOWEL
R503E		5'-8"		BARRIER DOWEL
R504E		7'-3"		BARRIER VERTICAL
R505E	-- SER. OF 4	6'-3" TO 7'-1"		BARRIER VERTICAL
R506E	-- SER. OF 4	5'-9" TO 6'-1"		BARRIER VERTICAL
R507E		5'-6"		BARRIER VERTICAL
R408E		10'-3"		BARRIER LONGIT.
R4__E				BARRIER LONGIT.
R4__E				BARRIER LONGIT.
R4__E				BARRIER LONGIT.
R4__E				BARRIER LONGIT.
R4__E				BARRIER LONGIT.
R4__E				BARRIER LONGIT.

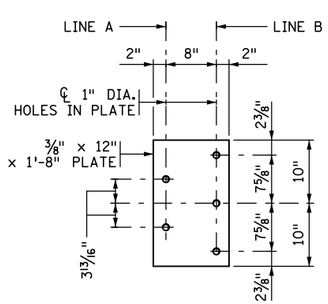

GUARDRAIL CONNECTION DETAIL

GALVANIZE AFTER FABRICATION PER SPEC. 3394
ESTIMATED WEIGHT = 35 LBS.

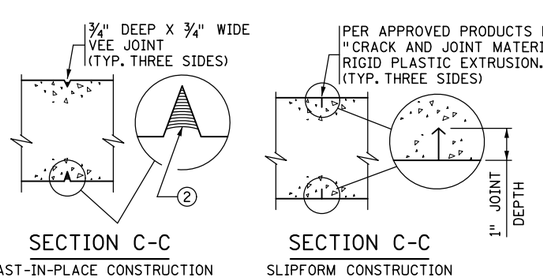

SECTION C-C

CAST-IN-PLACE CONSTRUCTION

SECTION C-C

SLIPFORM CONSTRUCTION

CONTROL JOINT DETAILS

FOR SLIPFORM CONSTRUCTION: IMMEDIATELY AFTER CONCRETE IS PLACED AND WHILE IT IS STILL WET, CREATE A ONE INCH STRAIGHT GROOVE USING A TROWEL. INSERT RIGID PLASTIC EXTRUSION INTO GROOVE TO A DEPTH 1/8" BELOW THE SURFACE; FINISH OVER GROOVE COMPLETELY HIDING THE EXTRUSION.

INCREASE R501E VERTICAL LEGS IF DECK SLAB THICKNESS IS GREATER THAN 9".

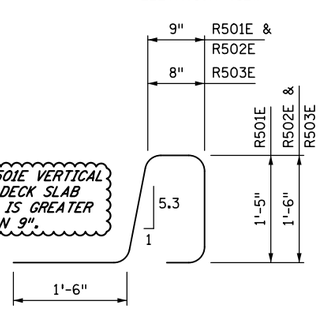

R501E, R502E, R503E

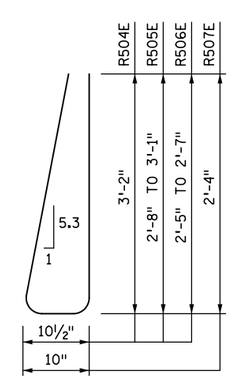

R504E, R505E, R506E, R507E

GENERAL NOTES

MEASURE PAYMENT LENGTH BETWEEN THE OUTSIDE ENDS OF THE BARRIER.

CONCRETE BARRIER = 552 LBS./FT. (0.136 CU. YDS./FT.)

FINISH ALL EDGES OF BARRIER WITH 1/2" CHAMFER, EXCEPT WHERE OTHERWISE NOTED.

SPACE CONTROL JOINTS AT 10 FT. MAXIMUM. REFER TO SUPERSTRUCTURE SHEET FOR SPECIFIC SPACING INFORMATION.

GUARDRAIL CONNECTION TO BE STRUCTURAL STEEL, SPEC. 3306.

GUARDRAIL CONNECTION AND NAME PLATE TO BE CONSIDERED INCIDENTAL TO BARRIER.

BARRIER QUANTITIES ARE LISTED IN SUMMARY OF QUANTITIES FOR SUPERSTRUCTURE.

① PLACE BAR ON TOP OF BOTTOM REINFORCEMENT MAT IN DECK.

② JOINT SEALANT PER MnDOT APPROVED/QUALIFIED PRODUCTS LIST - CRACK AND JOINT MATERIALS - SILICONE JOINT SEALERS.

③ REMOVE CONCRETE FROM PIPE ENDS AFTER SLIPFORMING OR FORM REMOVAL.

REVISION: MAY 10, 2017

APPROVED: AUGUST 24, 2016

Kevin Western

STATE BRIDGE ENGINEER

CERTIFIED BY _____ LICENSED PROFESSIONAL ENGINEER _____ DATE

NAME: LIC. NO.

TITLE: CONCRETE BARRIER 42" (TYPE S, TL-4)

INTEGRAL OR SEMI-INTEGRAL ABUTMENT WITH GUARDRAIL CONNECTION (WITHOUT CONCRETE WEARING COURSE)

DES: DR: CHK: CHK:

SHEET NO. OF SHEETS

APPROVED:

FIG. 5-397.140(A)

BRIDGE NO.

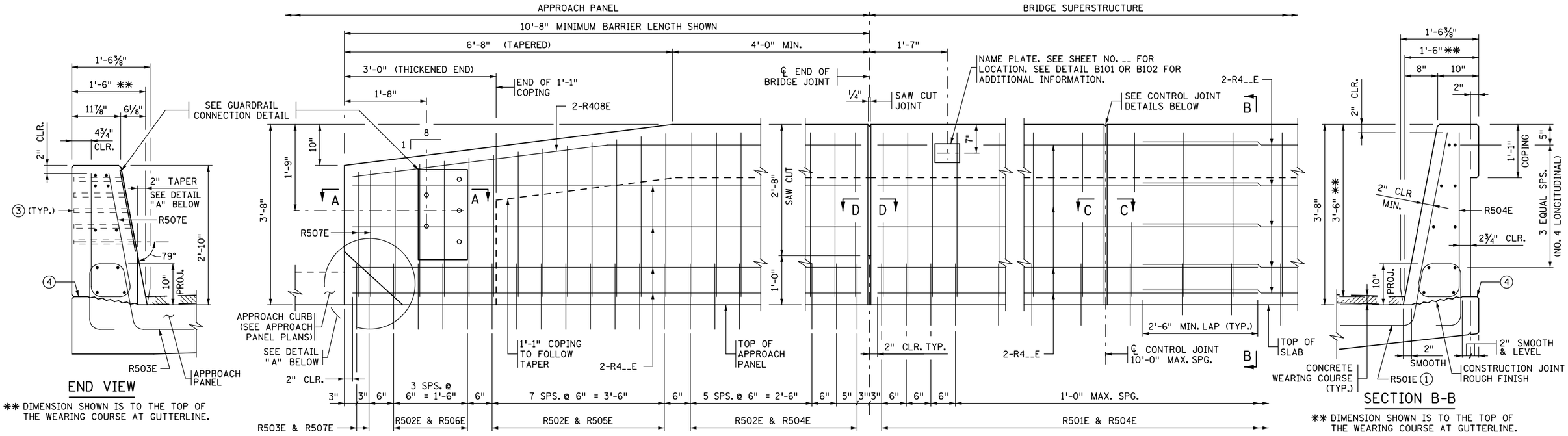

END VIEW

** DIMENSION SHOWN IS TO THE TOP OF THE WEARING COURSE AT GUTTERLINE.

JOINT AT ABUTMENT

(INTEGRAL OR SEMI-INTEGRAL ABUTMENT)

CONTROL JOINT

SECTION B-B

** DIMENSION SHOWN IS TO THE TOP OF THE WEARING COURSE AT GUTTERLINE.

INSIDE ELEVATION OF BARRIER

CONCRETE WEARING COURSE NOT SHOWN

BARRIER MEETS NCHRP 350 TL-4 REQUIREMENTS ON BRIDGE DECK AND TL-3 ON APPROACH PANEL.

DESIGNER NOTE
(REMOVE PRIOR TO PLOTTING FINAL PLAN):

MINIMUM BARRIER LENGTH ON APPROACH PANEL IS 10'-8" WITH MINIMUM OF 22 R502E AND R503E DOWELS WITH ACCOMPANYING APPROPRIATE BARRIER VERTICAL BARS, 12" MAX. SPACING.
VERIFY APPROACH BARRIER LENGTH, NEED FOR A GUARDRAIL CONNECTION, AND VERTICAL TAPER WITH ROADWAY DESIGNER.
REFER TO MEMO TO DESIGNERS (2016-01) FOR ADDITIONAL REQUIREMENTS REGARDING BARRIER PLACEMENT.

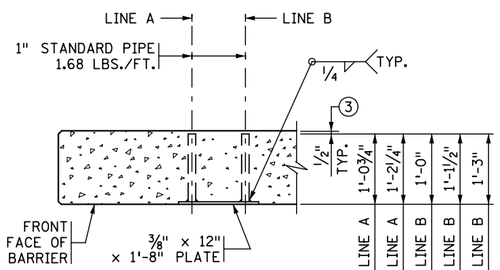

SECTION A-A

(REINFORCEMENT NOT SHOWN)

TRIM GUARDRAIL BOLTS SUCH THAT NO MORE THAN 1 1/2" PROTRUDES FROM BACK FACE OF BARRIER.

☆ DIMENSIONS INCLUDE 3/8" PLATE

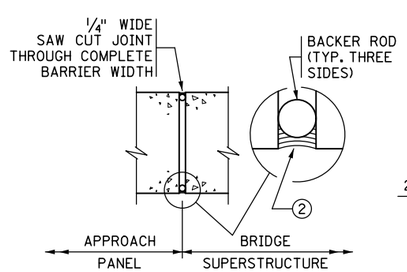

SECTION D-D

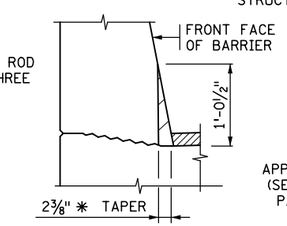

VIEW F-F

AT BARRIER END

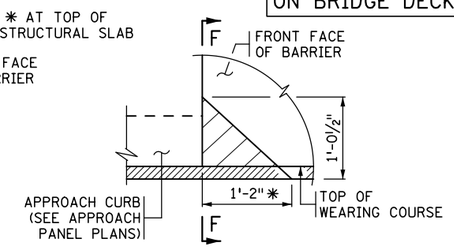

DETAIL "A"

ELEVATION VIEW
(WEARING COURSE SHOWN)

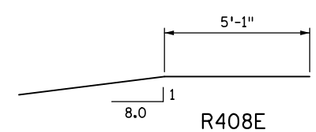

R408E

BILL OF REINFORCEMENT FOR BARRIER

BAR	NO.	LENGTH	SHAPE	LOCATION
R501E		5'-4"		BARRIER DOWEL
R502E		5'-6"		BARRIER DOWEL
R503E		5'-5"		BARRIER DOWEL
R504E		7'-6"		BARRIER VERTICAL
R505E	-- SER. OF 4	6'-7" TO 7'-5"		BARRIER VERTICAL
R506E	-- SER. OF 4	6'-1" TO 6'-5"		BARRIER VERTICAL
R507E		5'-10"		BARRIER VERTICAL
R408E		10'-3"		BARRIER LONGIT.
R4__E				BARRIER LONGIT.
R4__E				BARRIER LONGIT.
R4__E				BARRIER LONGIT.
R4__E				BARRIER LONGIT.
R4__E				BARRIER LONGIT.

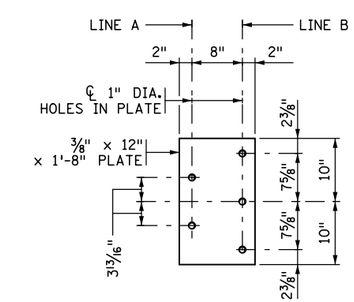

GUARDRAIL CONNECTION DETAIL

GALVANIZE AFTER FABRICATION PER SPEC. 3394
ESTIMATED WEIGHT = 35 LBS.

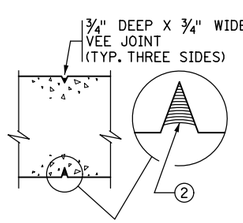

SECTION C-C

CAST-IN-PLACE CONSTRUCTION

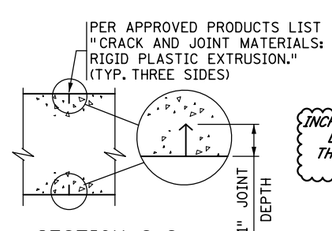

SECTION C-C

SLIPFORM CONSTRUCTION

CONTROL JOINT DETAILS

FOR SLIPFORM CONSTRUCTION: IMMEDIATELY AFTER CONCRETE IS PLACED AND WHILE IT IS STILL WET, CREATE A ONE INCH STRAIGHT GROOVE USING A TROWEL. INSERT RIGID PLASTIC EXTRUSION INTO GROOVE TO A DEPTH 1/8" BELOW THE SURFACE; FINISH OVER GROOVE COMPLETELY HIDING THE EXTRUSION.

INCREASE R501E VERTICAL LEGS IF DECK SLAB THICKNESS IS GREATER THAN 9".

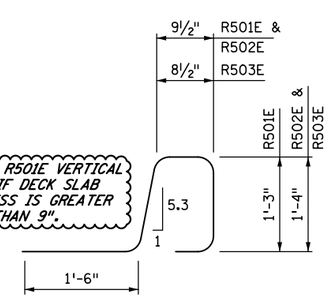

R501E, R502E, R503E

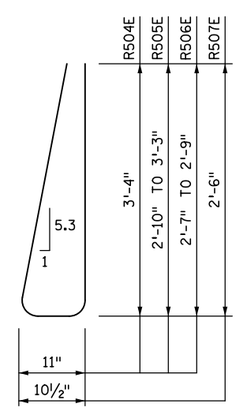

R504E, R505E, R506E, R507E

GENERAL NOTES

MEASURE PAYMENT LENGTH BETWEEN THE OUTSIDE ENDS OF THE BARRIER.

CONCRETE BARRIER = 569 LBS./FT. (0.140 CU. YDS./FT.)

FINISH ALL EDGES OF BARRIER WITH 1/2" CHAMFER, EXCEPT WHERE OTHERWISE NOTED.

SPACE CONTROL JOINTS AT 10 FT. MAXIMUM. REFER TO SUPERSTRUCTURE SHEET FOR SPECIFIC SPACING INFORMATION.

GUARDRAIL CONNECTION TO BE STRUCTURAL STEEL, SPEC. 3306.

GUARDRAIL CONNECTION AND NAME PLATE TO BE CONSIDERED INCIDENTAL TO BARRIER.

BARRIER QUANTITIES ARE LISTED IN SUMMARY OF QUANTITIES FOR SUPERSTRUCTURE.

① PLACE BAR ON TOP OF BOTTOM REINFORCEMENT MAT IN DECK.
② JOINT SEALANT PER MnDOT APPROVED/QUALIFIED PRODUCTS LIST - CRACK AND JOINT MATERIALS - SILICONE JOINT SEALERS.
③ REMOVE CONCRETE FROM PIPE ENDS AFTER SLIPFORMING OR FORM REMOVAL.
④ MATCH GUTTERLINE ELEVATION.

REVISION: MAY 10, 2017
APPROVED: AUGUST 24, 2016
Kevin Western
STATE BRIDGE ENGINEER

CERTIFIED BY _____ LICENSED PROFESSIONAL ENGINEER _____ DATE
NAME: LIC. NO.

TITLE: CONCRETE BARRIER 42" (TYPE S, TL-4)
INTEGRAL OR SEMI-INTEGRAL ABUTMENT WITH GUARDRAIL CONNECTION (WITH 2" CONCRETE WEARING COURSE)

DES: DR: CHK: CHK:
SHEET NO. OF SHEETS

FIG. 5-397.140(B)
APPROVED:
BRIDGE NO.

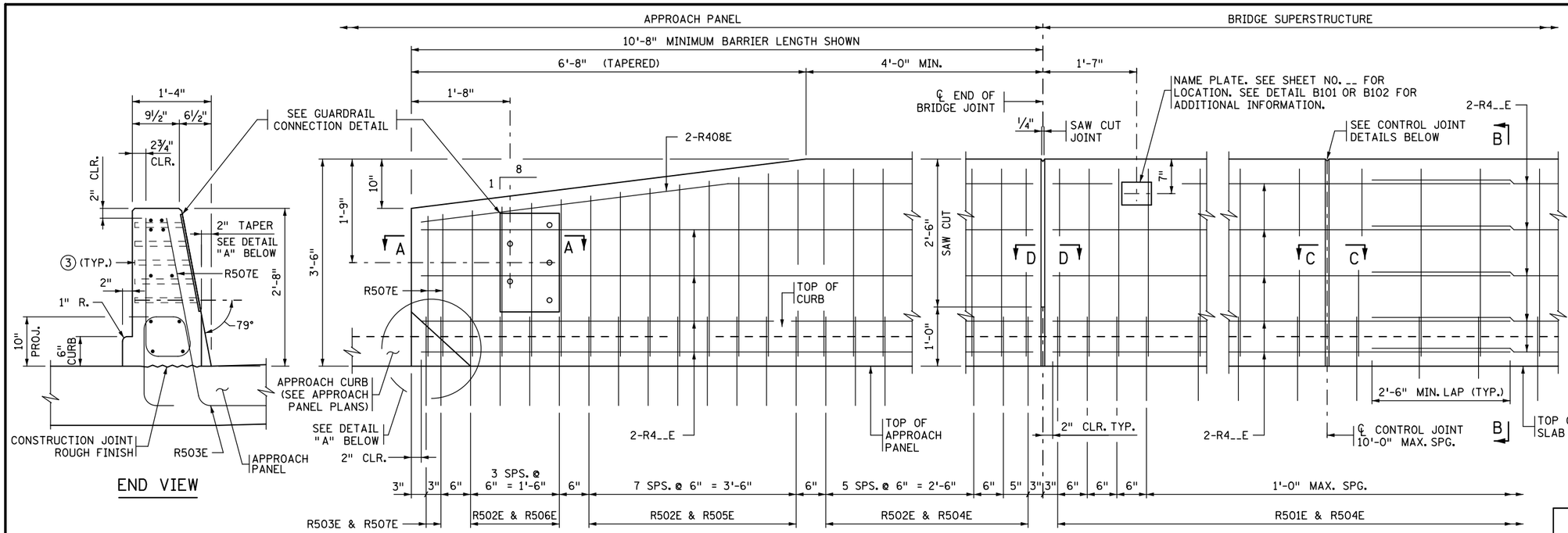

END VIEW

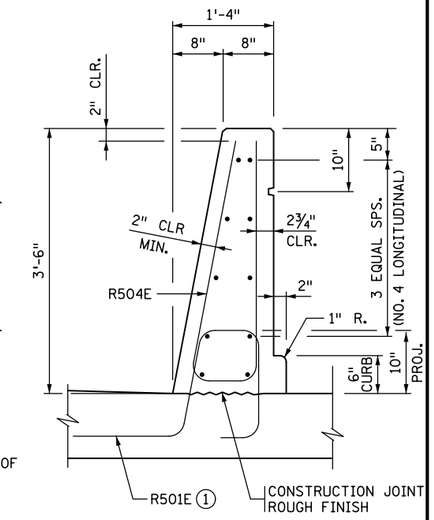

SECTION B-B

BILL OF REINFORCEMENT FOR BARRIER				
BAR	NO.	LENGTH	SHAPE	LOCATION
R501E		5'-7"		BARRIER DOWEL
R502E		5'-9"		BARRIER DOWEL
R503E		5'-8"		BARRIER DOWEL
R504E		7'-2"		BARRIER VERTICAL
R505E	-- SER. OF 4	6'-3" TO 7'-1"		BARRIER VERTICAL
R506E	-- SER. OF 4	5'-9" TO 6'-1"		BARRIER VERTICAL
R507E		5'-6"		BARRIER VERTICAL
R408E		10'-3"		BARRIER LONGIT.
R4__E				BARRIER LONGIT.
R4__E				BARRIER LONGIT.
R4__E				BARRIER LONGIT.
R4__E				BARRIER LONGIT.
R4__E				BARRIER LONGIT.
R4__E				BARRIER LONGIT.

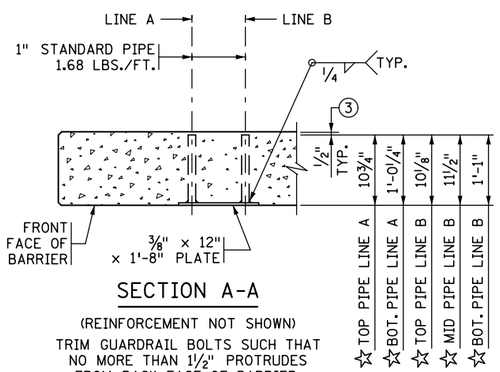

SECTION A-A

(REINFORCEMENT NOT SHOWN)

TRIM GUARDRAIL BOLTS SUCH THAT NO MORE THAN 1½" PROTRUDES FROM BACK FACE OF BARRIER.

☆ DIMENSIONS INCLUDE ⅜" PLATE

DESIGNER NOTE
(REMOVE PRIOR TO PLOTTING FINAL PLAN):

MINIMUM BARRIER LENGTH ON APPROACH PANEL IS 10'-8" WITH MINIMUM OF 22 R502E AND R503E DOWELS WITH ACCOMPANYING APPROPRIATE BARRIER VERTICAL BARS, 12" MAX. SPACING.
VERIFY APPROACH BARRIER LENGTH, NEED FOR A GUARDRAIL CONNECTION, AND VERTICAL TAPER WITH ROADWAY DESIGNER.
REFER TO MEMO TO DESIGNERS (2016-01) FOR ADDITIONAL REQUIREMENTS REGARDING BARRIER PLACEMENT.

JOINT AT ABUTMENT

(INTEGRAL OR SEMI-INTEGRAL ABUTMENT)

CONTROL JOINT

INSIDE ELEVATION OF BARRIER

BARRIER MEETS NCHRP 350 TL-4 REQUIREMENTS ON BRIDGE DECK AND TL-3 ON APPROACH PANEL.

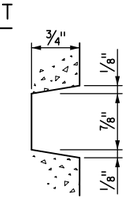

BARRIER RUSTICATION

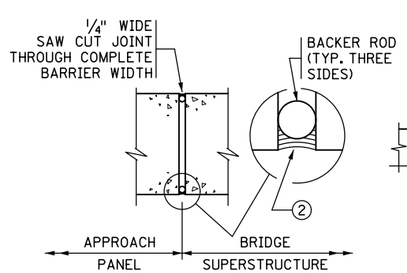

SECTION D-D

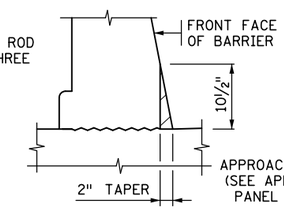

VIEW F-F

AT BARRIER END

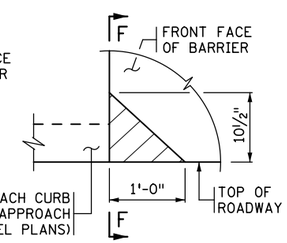

DETAIL "A"

ELEVATION VIEW

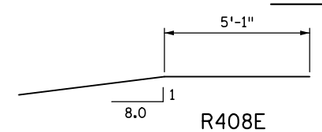

R408E

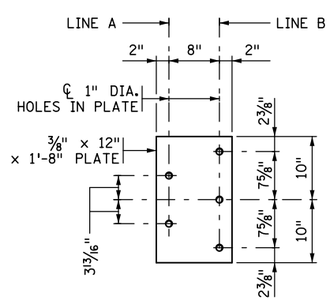

GUARDRAIL CONNECTION DETAIL

GALVANIZE AFTER FABRICATION PER SPEC. 3394
ESTIMATED WEIGHT = 34 LBS.

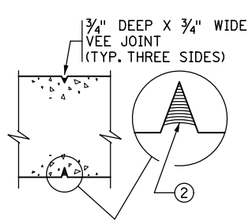

SECTION C-C

CAST-IN-PLACE CONSTRUCTION

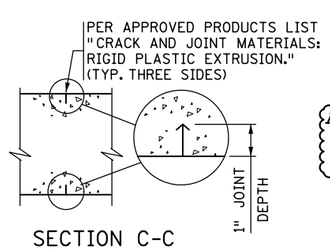

SECTION C-C

SLIPFORM CONSTRUCTION

CONTROL JOINT DETAILS

FOR SLIPFORM CONSTRUCTION: IMMEDIATELY AFTER CONCRETE IS PLACED AND WHILE IT IS STILL WET, CREATE A ONE INCH STRAIGHT GROOVE USING A TROWEL. INSERT RIGID PLASTIC EXTRUSION INTO GROOVE TO A DEPTH ⅛" BELOW THE SURFACE; FINISH OVER GROOVE COMPLETELY HIDING THE EXTRUSION.

INCREASE R501E VERTICAL LEGS IF DECK SLAB THICKNESS IS GREATER THAN 9".

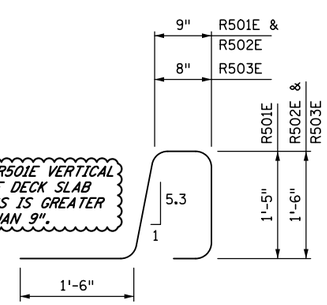

R501E, R502E, R503E

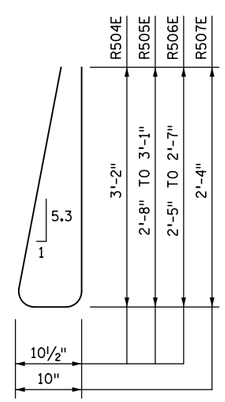

R504E, R505E, R506E, R507E

GENERAL NOTES

MEASURE PAYMENT LENGTH BETWEEN THE OUTSIDE ENDS OF THE BARRIER.

CONCRETE BARRIER = 537 LBS./FT. (0.133 CU. YDS./FT.)

FINISH ALL EDGES OF BARRIER WITH ½" CHAMFER, EXCEPT WHERE OTHERWISE NOTED.

SPACE CONTROL JOINTS AT 10 FT. MAXIMUM. REFER TO SUPERSTRUCTURE SHEET FOR SPECIFIC SPACING INFORMATION.

GUARDRAIL CONNECTION TO BE STRUCTURAL STEEL, SPEC. 3306.

GUARDRAIL CONNECTION AND NAME PLATE TO BE CONSIDERED INCIDENTAL TO BARRIER.

BARRIER QUANTITIES ARE LISTED IN SUMMARY OF QUANTITIES FOR SUPERSTRUCTURE.

① PLACE BAR ON TOP OF BOTTOM REINFORCEMENT MAT IN DECK.

② JOINT SEALANT PER MnDOT APPROVED/QUALIFIED PRODUCTS LIST - CRACK AND JOINT MATERIALS - SILICONE JOINT SEALERS.

③ REMOVE CONCRETE FROM PIPE ENDS AFTER SLIPFORMING OR FORM REMOVAL.

REVISION: MAY 10, 2017

APPROVED: AUGUST 24, 2016

Kevin Western

STATE BRIDGE ENGINEER

CERTIFIED BY _____ LICENSED PROFESSIONAL ENGINEER _____ DATE

NAME: LIC. NO.

TITLE: CONCRETE BARRIER 42" (TYPE S, TL-4)

INTEGRAL OR SEMI-INTEGRAL ABUTMENT WITH BRIDGE SLAB SIDEWALK AND GUARDRAIL CONNECTION (WITHOUT CONCRETE WEARING COURSE)

DES: DR: CHK: CHK:

SHEET NO. OF SHEETS

FIG. 5-397.140(C)

APPROVED:

BRIDGE NO.

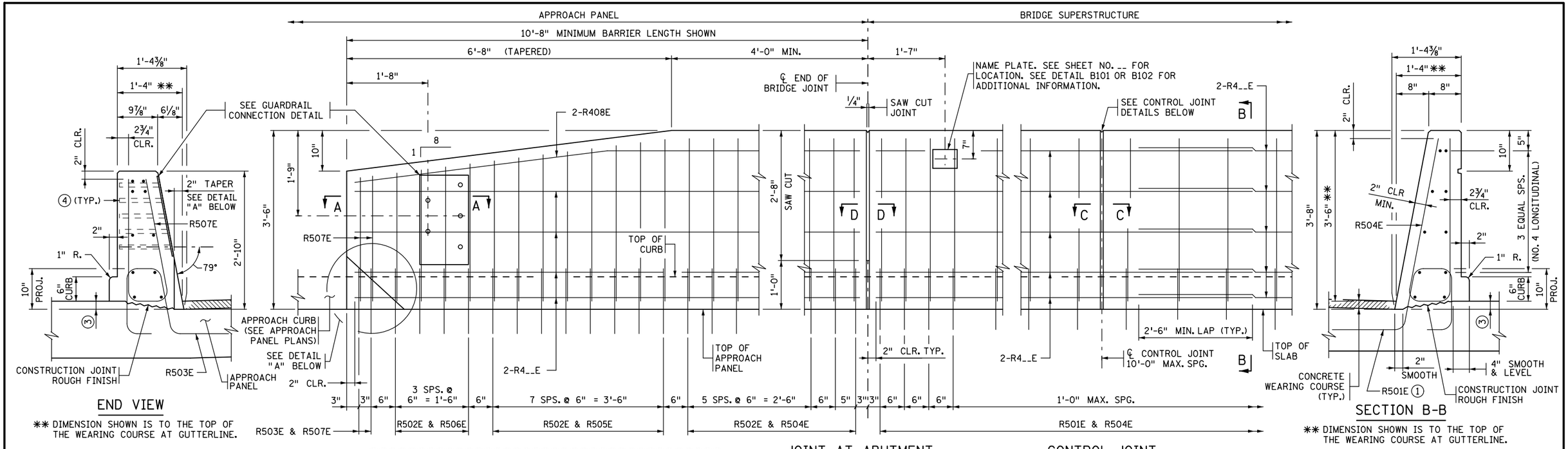

END VIEW

** DIMENSION SHOWN IS TO THE TOP OF THE WEARING COURSE AT GUTTERLINE.

JOINT AT ABUTMENT

(INTEGRAL OR SEMI-INTEGRAL ABUTMENT)

CONTROL JOINT

SECTION B-B

** DIMENSION SHOWN IS TO THE TOP OF THE WEARING COURSE AT GUTTERLINE.

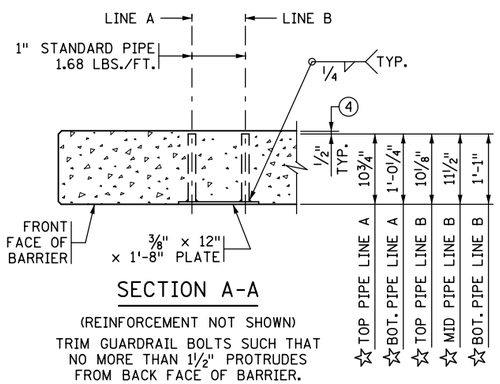

SECTION A-A

(REINFORCEMENT NOT SHOWN)

TRIM GUARDRAIL BOLTS SUCH THAT NO MORE THAN 1½" PROTRUDES FROM BACK FACE OF BARRIER.

☆ DIMENSIONS INCLUDE ⅜" PLATE

DESIGNER NOTE
(REMOVE PRIOR TO PLOTTING FINAL PLAN):

MINIMUM BARRIER LENGTH ON APPROACH PANEL IS 10'-8" WITH MINIMUM OF 22 R502E AND R503E DOWELS WITH ACCOMPANYING APPROPRIATE BARRIER VERTICAL BARS, 12" MAX. SPACING.
VERIFY APPROACH BARRIER LENGTH, NEED FOR A GUARDRAIL CONNECTION, AND VERTICAL TAPER WITH ROADWAY DESIGNER.
REFER TO MEMO TO DESIGNERS (2016-01) FOR ADDITIONAL REQUIREMENTS REGARDING BARRIER PLACEMENT.

INSIDE ELEVATION OF BARRIER

CONCRETE WEARING COURSE NOT SHOWN

BARRIER MEETS NCHRP 350 TL-4 REQUIREMENTS ON BRIDGE DECK AND TL-3 ON APPROACH PANEL.

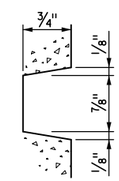

BARRIER RUSTICATION

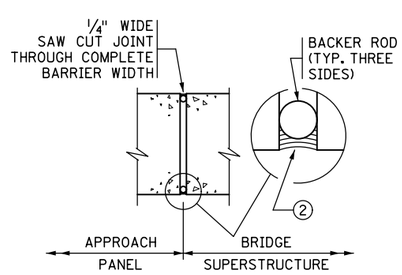

SECTION D-D

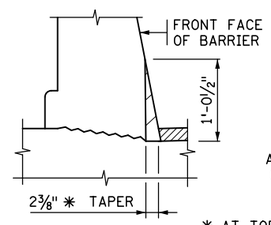

VIEW F-F

AT BARRIER END

* AT TOP OF STRUCTURAL SLAB

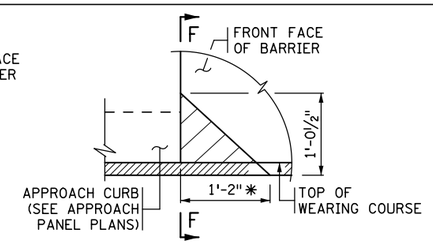

DETAIL "A"

ELEVATION VIEW
(WEARING COURSE SHOWN)

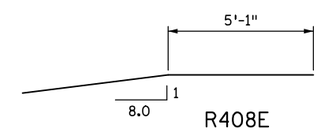

R408E

BILL OF REINFORCEMENT FOR BARRIER

BAR	NO.	LENGTH	SHAPE	LOCATION
R501E		5'-4"		BARRIER DOWEL
R502E		5'-6"		BARRIER DOWEL
R503E		5'-5"		BARRIER DOWEL
R504E		7'-6"		BARRIER VERTICAL
R505E	-- SER. OF 4	6'-7" TO 7'-5"		BARRIER VERTICAL
R506E	-- SER. OF 4	6'-1" TO 6'-5"		BARRIER VERTICAL
R507E		5'-10"		BARRIER VERTICAL
R408E		10'-3"		BARRIER LONGIT.
R4__E				BARRIER LONGIT.
R4__E				BARRIER LONGIT.
R4__E				BARRIER LONGIT.
R4__E				BARRIER LONGIT.

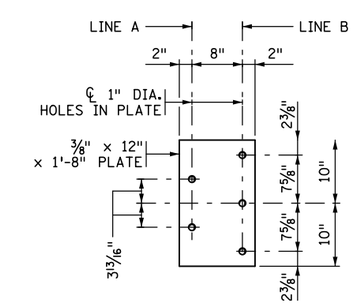

GUARDRAIL CONNECTION DETAIL

GALVANIZE AFTER FABRICATION PER SPEC. 3394
ESTIMATED WEIGHT = 34 LBS.

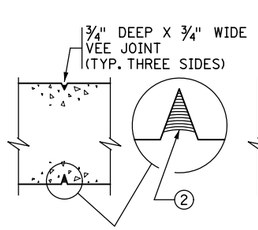

SECTION C-C

CAST-IN-PLACE CONSTRUCTION

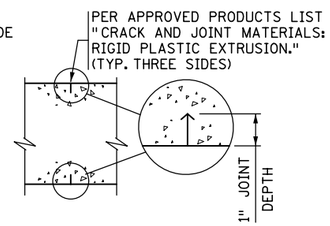

SECTION C-C

SLIPFORM CONSTRUCTION

CONTROL JOINT DETAILS

FOR SLIPFORM CONSTRUCTION: IMMEDIATELY AFTER CONCRETE IS PLACED AND WHILE IT IS STILL WET, CREATE A ONE INCH STRAIGHT GROOVE USING A TROWEL. INSERT RIGID PLASTIC EXTRUSION INTO GROOVE TO A DEPTH 1/8" BELOW THE SURFACE; FINISH OVER GROOVE COMPLETELY HIDING THE EXTRUSION.

INCREASE R501E VERTICAL LEGS IF DECK SLAB THICKNESS IS GREATER THAN 9".

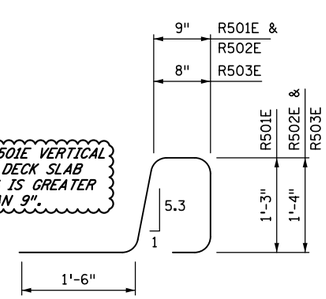

R501E, R502E, R503E

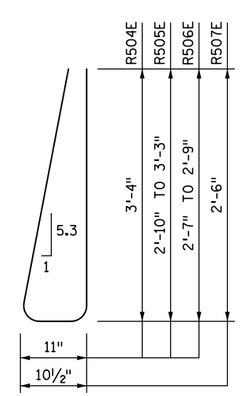

R504E, R505E, R506E, R507E

GENERAL NOTES

MEASURE PAYMENT LENGTH BETWEEN THE OUTSIDE ENDS OF THE BARRIER.

CONCRETE BARRIER = 556 LBS./FT. (0.137 CU. YDS./FT.)

FINISH ALL EDGES OF BARRIER WITH ½" CHAMFER, EXCEPT WHERE OTHERWISE NOTED.

SPACE CONTROL JOINTS AT 10 FT. MAXIMUM. REFER TO SUPERSTRUCTURE SHEET FOR SPECIFIC SPACING INFORMATION.

GUARDRAIL CONNECTION TO BE STRUCTURAL STEEL, SPEC. 3306.

GUARDRAIL CONNECTION AND NAME PLATE TO BE CONSIDERED INCIDENTAL TO BARRIER.

BARRIER QUANTITIES ARE LISTED IN SUMMARY OF QUANTITIES FOR SUPERSTRUCTURE.

(1) PLACE BAR ON TOP OF BOTTOM REINFORCEMENT MAT IN DECK.

(2) JOINT SEALANT PER MnDOT APPROVED/QUALIFIED PRODUCTS LIST - CRACK AND JOINT MATERIALS - SILICONE JOINT SEALERS.

(3) DIMENSIONS TO BE DETERMINED BASED ON THE BRIDGE DECK SLOPE.

(4) REMOVE CONCRETE FROM PIPE ENDS AFTER SLIPFORMING OR FORM REMOVAL.

REVISION: MAY 10, 2017

APPROVED: AUGUST 24, 2016
Kevin Western
STATE BRIDGE ENGINEER

CERTIFIED BY _____ LICENSED PROFESSIONAL ENGINEER _____ DATE
NAME: LIC. NO.

TITLE: CONCRETE BARRIER 42" (TYPE S, TL-4)
INTEGRAL OR SEMI-INTEGRAL ABUTMENT WITH BRIDGE SLAB SIDEWALK AND GUARDRAIL CONNECTION (WITH 2" CONCRETE WEARING COURSE)

DES: DR: CHK: CHK:
SHEET NO. OF SHEETS

FIG. 5-397.140(D)

APPROVED:

BRIDGE NO.

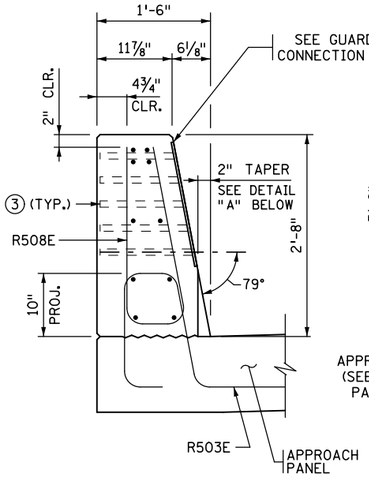

END VIEW

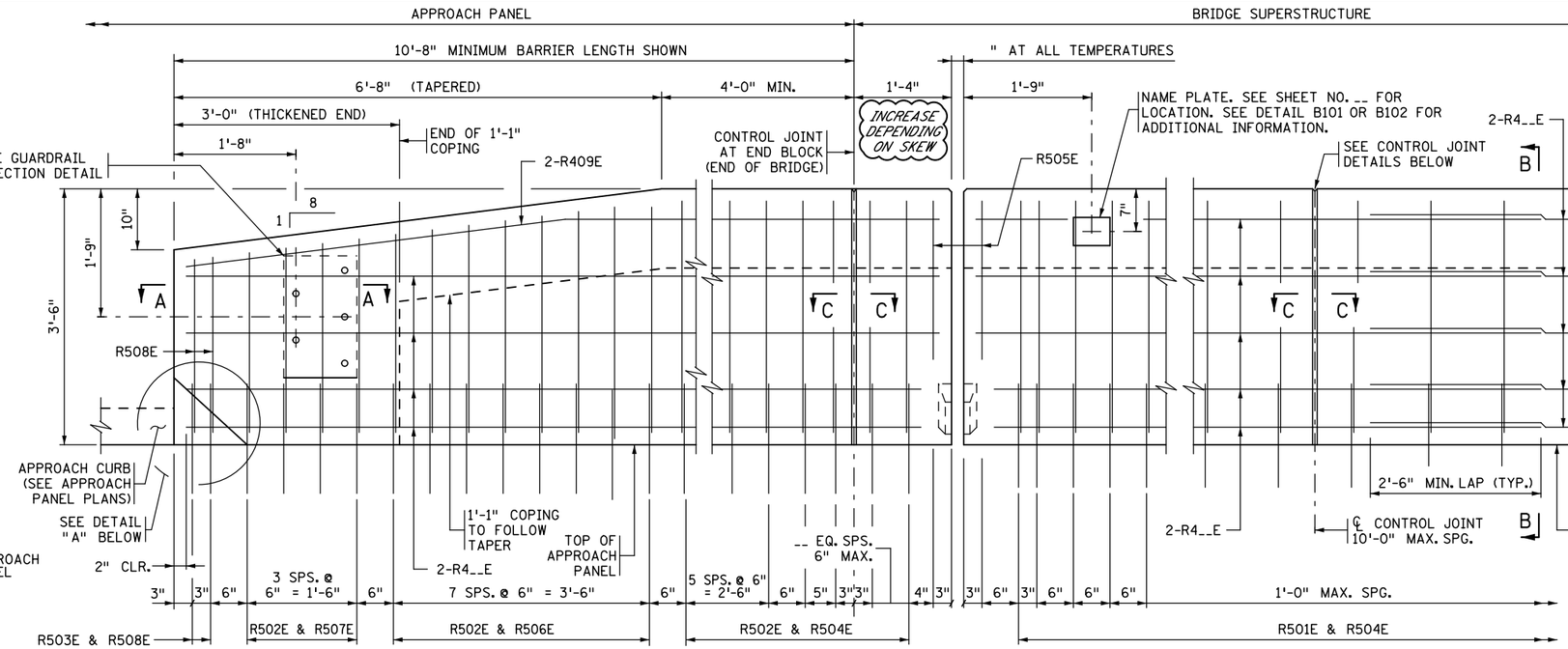

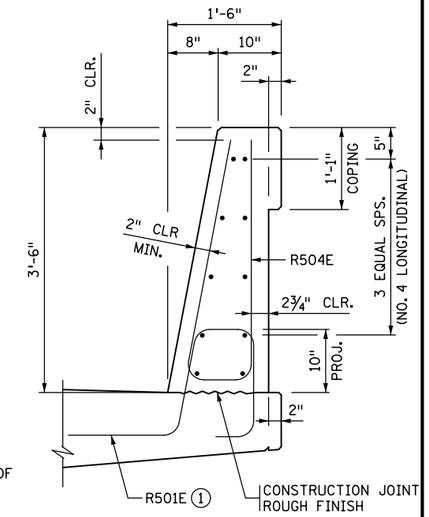

SECTION B-B

EXPANSION JOINT ④

EXPANSION DEVICE NOT SHOWN

CONTROL JOINT

INSIDE ELEVATION OF BARRIER

BARRIER MEETS NCHRP 350 TL-4 REQUIREMENTS ON BRIDGE DECK AND TL-3 ON APPROACH PANEL.

BILL OF REINFORCEMENT FOR BARRIER				
BAR	NO.	LENGTH	SHAPE	LOCATION
R501E		5'-7"		BARRIER DOWEL
R502E		5'-9"		BARRIER DOWEL
R503E		5'-8"		BARRIER DOWEL
R504E		7'-2"		BARRIER VERTICAL
R505E		5'-0"		BARRIER VERTICAL
R506E	-- SER. OF 4	6'-3" TO 7'-1"		BARRIER VERTICAL
R507E	-- SER. OF 4	5'-9" TO 6'-1"		BARRIER VERTICAL
R508E		5'-6"		BARRIER VERTICAL
R409E		11'-7"		BARRIER LONGIT.
R4__E				BARRIER LONGIT.
R4__E				BARRIER LONGIT.
R4__E				BARRIER LONGIT.
R4__E				BARRIER LONGIT.

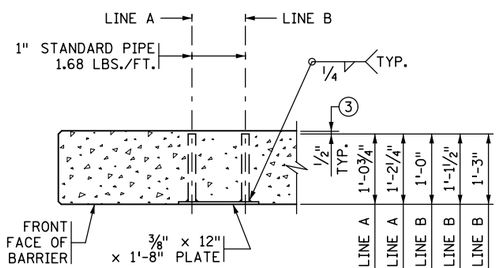

SECTION A-A

(REINFORCEMENT NOT SHOWN)

TRIM GUARDRAIL BOLTS SUCH THAT NO MORE THAN 1½" PROTRUDES FROM BACK FACE OF BARRIER.

☆ DIMENSIONS INCLUDE ⅜" PLATE

DESIGNER NOTE
(REMOVE PRIOR TO PLOTTING FINAL PLAN):

MINIMUM BARRIER LENGTH ON APPROACH PANEL IS 10'-8" WITH MINIMUM OF 22 R502E AND R503E DOWELS WITH ACCOMPANYING APPROPRIATE BARRIER VERTICAL BARS, 12" MAX. SPACING.
VERIFY APPROACH BARRIER LENGTH, NEED FOR A GUARDRAIL CONNECTION, AND VERTICAL TAPER WITH ROADWAY DESIGNER.
REFER TO MEMO TO DESIGNERS (2016-01) FOR ADDITIONAL REQUIREMENTS REGARDING BARRIER PLACEMENT.

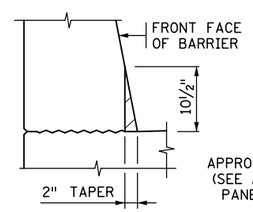

VIEW F-F

AT BARRIER END

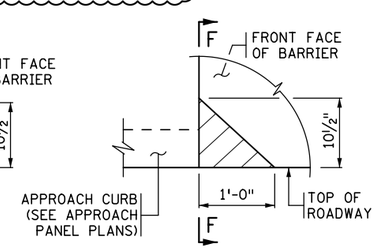

DETAIL "A"

ELEVATION VIEW

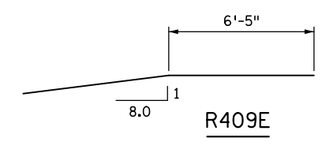

R409E

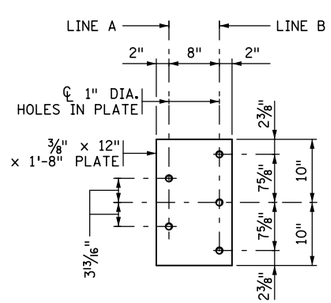

GUARDRAIL CONNECTION DETAIL

GALVANIZE AFTER FABRICATION PER SPEC. 3394
ESTIMATED WEIGHT = 35 LBS.

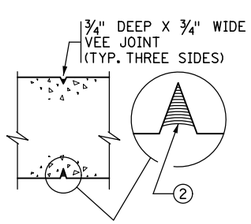

SECTION C-C

CAST-IN-PLACE CONSTRUCTION

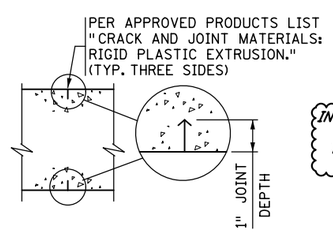

SECTION C-C

SLIPFORM CONSTRUCTION

CONTROL JOINT DETAILS

FOR SLIPFORM CONSTRUCTION: IMMEDIATELY AFTER CONCRETE IS PLACED AND WHILE IT IS STILL WET, CREATE A ONE INCH STRAIGHT GROOVE USING A TROWEL. INSERT RIGID PLASTIC EXTRUSION INTO GROOVE TO A DEPTH ⅛" BELOW THE SURFACE; FINISH OVER GROOVE COMPLETELY HIDING THE EXTRUSION.

INCREASE R501E VERTICAL LEGS IF DECK SLAB THICKNESS IS GREATER THAN 9".

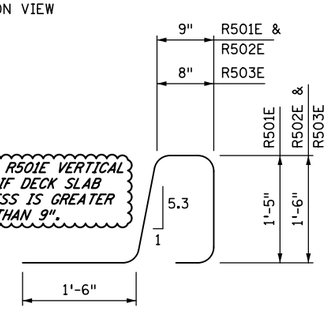

R501E, R502E, R503E

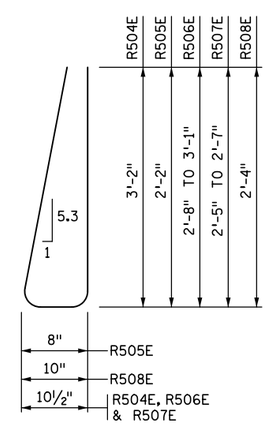

R504E, R505E, R506E, R507E, R508E

GENERAL NOTES

MEASURE PAYMENT LENGTH BETWEEN THE OUTSIDE ENDS OF THE BARRIER.

CONCRETE BARRIER = 552 LBS./FT. (0.136 CU. YDS./FT.)

FINISH ALL EDGES OF BARRIER WITH ½" CHAMFER, EXCEPT WHERE OTHERWISE NOTED.

SPACE CONTROL JOINTS AT 10 FT. MAXIMUM. REFER TO SUPERSTRUCTURE SHEET FOR SPECIFIC SPACING INFORMATION.

GUARDRAIL CONNECTION TO BE STRUCTURAL STEEL, SPEC. 3306.

GUARDRAIL CONNECTION AND NAME PLATE TO BE CONSIDERED INCIDENTAL TO BARRIER.

BARRIER QUANTITIES ARE LISTED IN SUMMARY OF QUANTITIES FOR SUPERSTRUCTURE.

① PLACE BAR ON TOP OF BOTTOM REINFORCEMENT MAT IN DECK.

② JOINT SEALANT PER MnDOT APPROVED/QUALIFIED PRODUCTS LIST - CRACK AND JOINT MATERIALS - SILICONE JOINT SEALERS.

③ REMOVE CONCRETE FROM PIPE ENDS AFTER SLIPFORMING OR FORM REMOVAL.

④ REFER TO "WATERPROOF EXPANSION DEVICE" STANDARD PLANS FOR COVER PLATE DETAILS.

REVISION: MAY 10, 2017

APPROVED: AUGUST 24, 2016

Kevin Western

STATE BRIDGE ENGINEER

CERTIFIED BY _____ LICENSED PROFESSIONAL ENGINEER _____ DATE

NAME: LIC. NO.

TITLE: CONCRETE BARRIER 42" (TYPE S, TL-4)
PARAPET ABUTMENT WITH GUARDRAIL CONNECTION (WITHOUT CONCRETE WEARING COURSE)

DES: DR:
CHK: CHK:
SHEET NO. OF SHEETS

FIG. 5-397.141(A)

APPROVED:

BRIDGE NO.

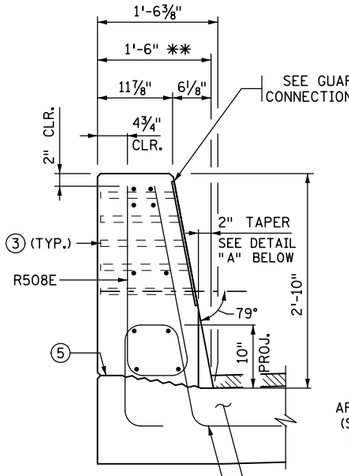

END VIEW

** DIMENSION SHOWN IS TO THE TOP OF THE WEARING COURSE AT GUTTERLINE.

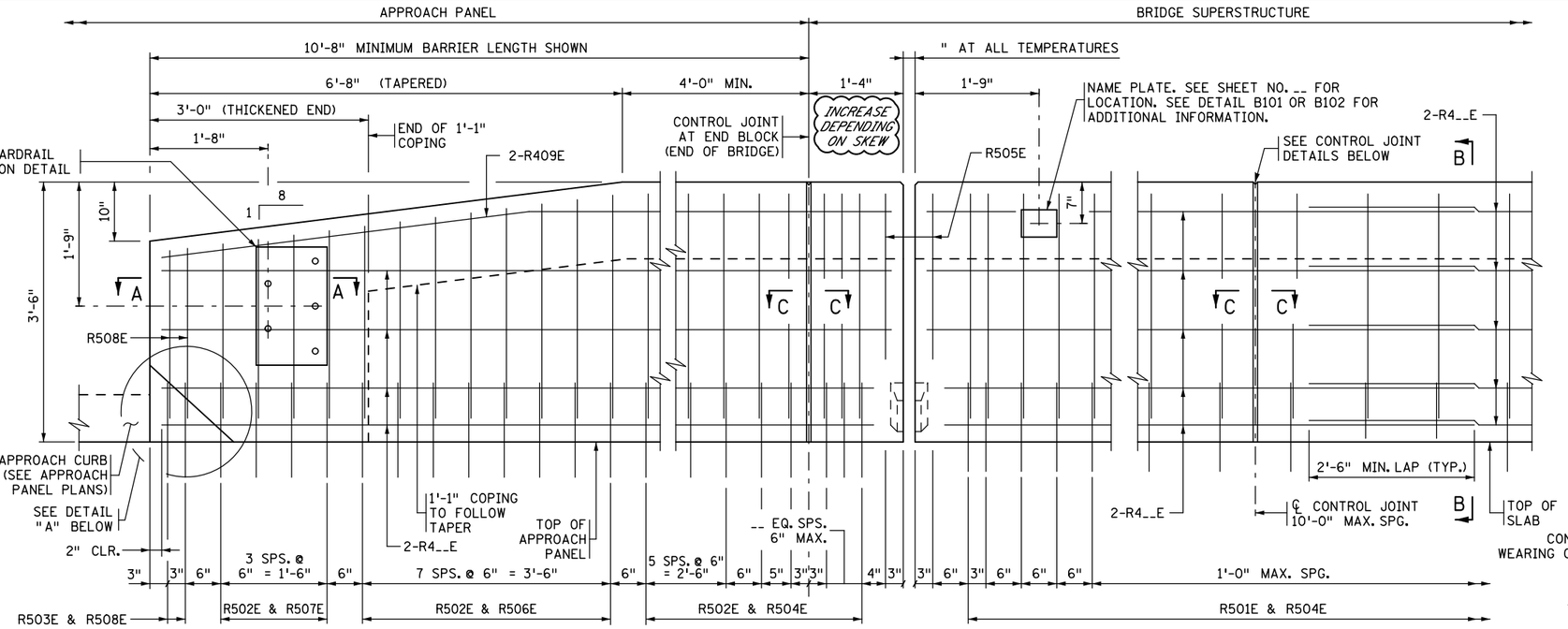

EXPANSION JOINT ④

EXPANSION DEVICE NOT SHOWN

CONTROL JOINT

INSIDE ELEVATION OF BARRIER

CONCRETE WEARING COURSE NOT SHOWN

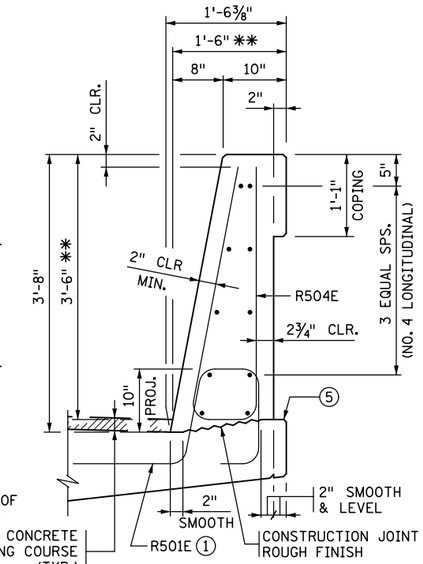

SECTION B-B

** DIMENSION SHOWN IS TO THE TOP OF THE WEARING COURSE AT GUTTERLINE.

BARRIER MEETS NCHRP 350 TL-4 REQUIREMENTS ON BRIDGE DECK AND TL-3 ON APPROACH PANEL.

BILL OF REINFORCEMENT FOR BARRIER

BAR	NO.	LENGTH	SHAPE	LOCATION
R501E		5'-4"		BARRIER DOWEL
R502E		5'-6"		BARRIER DOWEL
R503E		5'-5"		BARRIER DOWEL
R504E		7'-6"		BARRIER VERTICAL
R505E		5'-4"		BARRIER VERTICAL
R506E	-- SER. OF 4	6'-7" TO 7'-5"		BARRIER VERTICAL
R507E	-- SER. OF 4	6'-1" TO 6'-5"		BARRIER VERTICAL
R508E		5'-10"		BARRIER VERTICAL
R409E		11'-7"		BARRIER LONGIT.
R4__E				BARRIER LONGIT.
R4__E				BARRIER LONGIT.
R4__E				BARRIER LONGIT.
R4__E				BARRIER LONGIT.

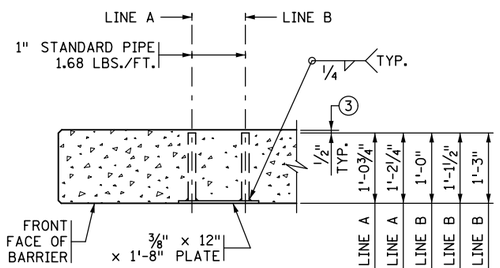

SECTION A-A

(REINFORCEMENT NOT SHOWN)

TRIM GUARDRAIL BOLTS SUCH THAT NO MORE THAN 1½" PROTRUDES FROM BACK FACE OF BARRIER.

☆ DIMENSIONS INCLUDE ⅜" PLATE

DESIGNER NOTE
(REMOVE PRIOR TO PLOTTING FINAL PLAN):

MINIMUM BARRIER LENGTH ON APPROACH PANEL IS 10'-8" WITH MINIMUM OF 22 R502E AND R503E DOWELS WITH ACCOMPANYING APPROPRIATE BARRIER VERTICAL BARS, 12" MAX. SPACING.
VERIFY APPROACH BARRIER LENGTH, NEED FOR A GUARDRAIL CONNECTION, AND VERTICAL TAPER WITH ROADWAY DESIGNER.
REFER TO MEMO TO DESIGNERS (2016-01) FOR ADDITIONAL REQUIREMENTS REGARDING BARRIER PLACEMENT AND LINK WITH ADJACENT RETAINING WALLS.

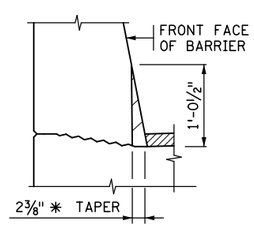

VIEW F-F

AT BARRIER END

* AT TOP OF STRUCTURAL SLAB

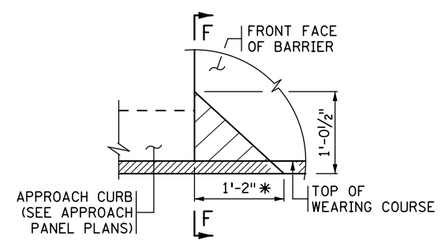

DETAIL "A"

ELEVATION VIEW

(WEARING COURSE SHOWN)

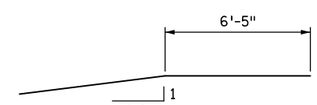

R409E

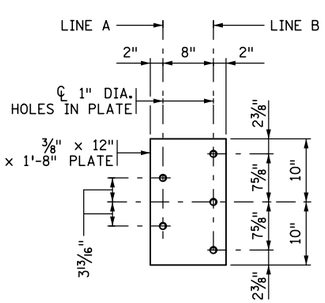

GUARDRAIL CONNECTION DETAIL

GALVANIZE AFTER FABRICATION PER SPEC. 3394

ESTIMATED WEIGHT = 35 LBS.

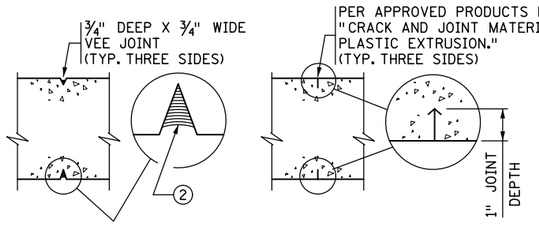

SECTION C-C

CAST-IN-PLACE CONSTRUCTION

SECTION C-C

SLIPFORM CONSTRUCTION

CONTROL JOINT DETAILS

FOR SLIPFORM CONSTRUCTION: IMMEDIATELY AFTER CONCRETE IS PLACED AND WHILE IT IS STILL WET, CREATE A ONE INCH STRAIGHT GROOVE USING A TROWEL. INSERT RIGID PLASTIC EXTRUSION INTO GROOVE TO A DEPTH ⅛" BELOW THE SURFACE; FINISH OVER GROOVE COMPLETELY HIDING THE EXTRUSION.

INCREASE R501E VERTICAL LEGS IF DECK SLAB THICKNESS IS GREATER THAN 9".

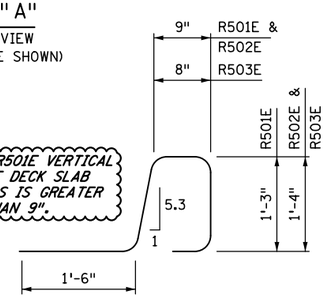

R501E, R502E & R503E

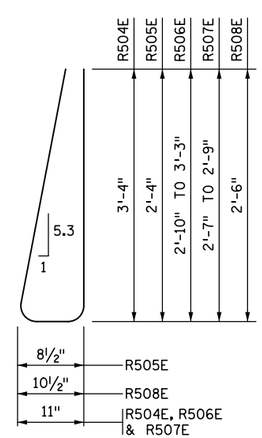

R504E, R505E, R506E, R507E, R508E

GENERAL NOTES

MEASURE PAYMENT LENGTH BETWEEN THE OUTSIDE ENDS OF THE BARRIER.

CONCRETE BARRIER = 569 LBS./FT. (0.140 CU. YDS./FT.)

FINISH ALL EDGES OF BARRIER WITH ½" CHAMFER, EXCEPT WHERE OTHERWISE NOTED.

SPACE CONTROL JOINTS AT 10 FT. MAXIMUM. REFER TO SUPERSTRUCTURE SHEET FOR SPECIFIC SPACING INFORMATION.

GUARDRAIL CONNECTION TO BE STRUCTURAL STEEL, SPEC. 3306.

GUARDRAIL CONNECTION AND NAME PLATE TO BE CONSIDERED INCIDENTAL TO BARRIER.

BARRIER QUANTITIES ARE LISTED IN SUMMARY OF QUANTITIES FOR SUPERSTRUCTURE.

① PLACE BAR ON TOP OF BOTTOM REINFORCEMENT MAT IN DECK.

② JOINT SEALANT PER MnDOT APPROVED/QUALIFIED PRODUCTS LIST - CRACK AND JOINT MATERIALS - SILICONE JOINT SEALERS.

③ REMOVE CONCRETE FROM PIPE ENDS AFTER SLIPFORMING OR FORM REMOVAL.

④ REFER TO "WATERPROOF EXPANSION DEVICE" STANDARD PLANS FOR COVER PLATE DETAILS.

⑤ MATCH GUTTERLINE ELEVATION.

REVISION: MAY 10, 2017

APPROVED: AUGUST 24, 2016

Kevin Western

STATE BRIDGE ENGINEER

CERTIFIED BY _____ LICENSED PROFESSIONAL ENGINEER _____ DATE

NAME: LIC. NO.

TITLE: CONCRETE BARRIER 42" (TYPE S, TL-4)

PARAPET ABUTMENT WITH GUARDRAIL CONNECTION (WITH 2" CONCRETE WEARING COURSE)

DES: DR: CHK: CHK:

SHEET NO. OF SHEETS

APPROVED:

FIG. 5-397.141(B)

BRIDGE NO.

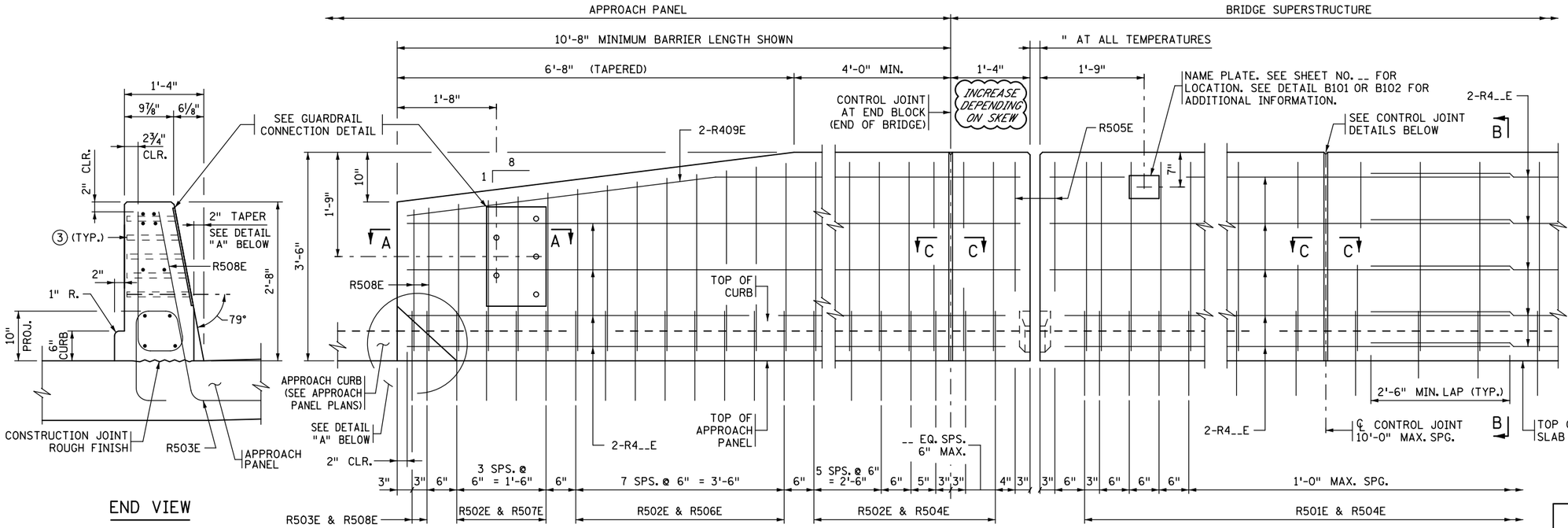

EXPANSION JOINT ④

EXPANSION DEVICE NOT SHOWN

CONTROL JOINT

INSIDE ELEVATION OF BARRIER

BARRIER MEETS NCHRP 350 TL-4 REQUIREMENTS ON BRIDGE DECK AND TL-3 ON APPROACH PANEL.

END VIEW

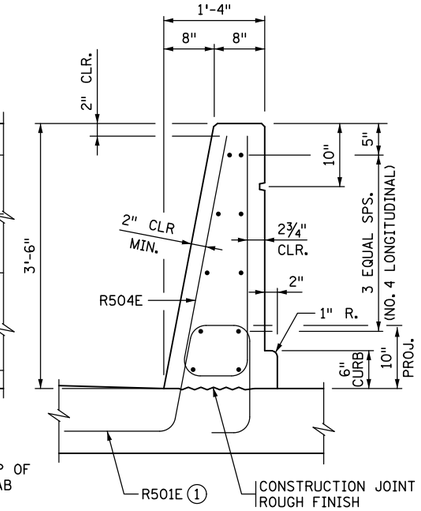

SECTION B-B

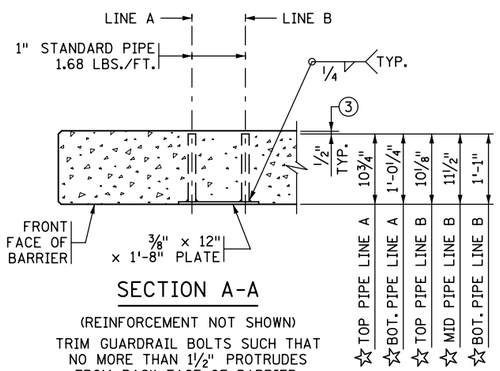

SECTION A-A

(REINFORCEMENT NOT SHOWN)

TRIM GUARDRAIL BOLTS SUCH THAT NO MORE THAN 1½" PROTRUDES FROM BACK FACE OF BARRIER.

☆ DIMENSIONS INCLUDE ⅜" PLATE

DESIGNER NOTE
(REMOVE PRIOR TO PLOTTING FINAL PLAN):

MINIMUM BARRIER LENGTH ON APPROACH PANEL IS 10'-8" WITH MINIMUM OF 22 R502E AND R503E DOWELS WITH ACCOMPANYING APPROPRIATE BARRIER VERTICAL BARS, 12" MAX. SPACING.
VERIFY APPROACH BARRIER LENGTH, NEED FOR A GUARDRAIL CONNECTION, AND VERTICAL TAPER WITH ROADWAY DESIGNER.
REFER TO MEMO TO DESIGNERS (2016-01) FOR ADDITIONAL REQUIREMENTS REGARDING BARRIER PLACEMENT.

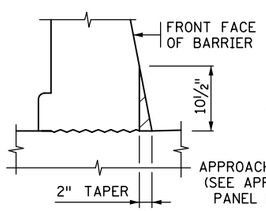

VIEW F-F

AT BARRIER END

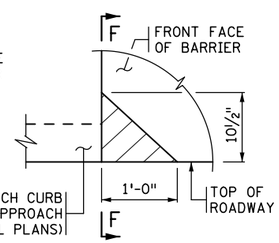

DETAIL "A"

ELEVATION VIEW

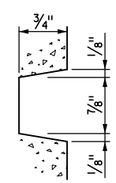

BARRIER RUSTICATION

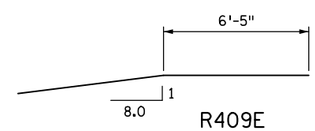

R409E

BILL OF REINFORCEMENT FOR BARRIER				
BAR	NO.	LENGTH	SHAPE	LOCATION
R501E		5'-7"		BARRIER DOWEL
R502E		5'-9"		BARRIER DOWEL
R503E		5'-8"		BARRIER DOWEL
R504E		7'-2"		BARRIER VERTICAL
R505E		5'-0"		BARRIER VERTICAL
R506E	-- SER. OF 4	6'-3" TO 7'-1"		BARRIER VERTICAL
R507E	-- SER. OF 4	5'-9" TO 6'-1"		BARRIER VERTICAL
R508E		5'-6"		BARRIER VERTICAL
R409E		11'-7"		BARRIER LONGIT.
R4__E				BARRIER LONGIT.
R4__E				BARRIER LONGIT.
R4__E				BARRIER LONGIT.
R4__E				BARRIER LONGIT.
R4__E				BARRIER LONGIT.

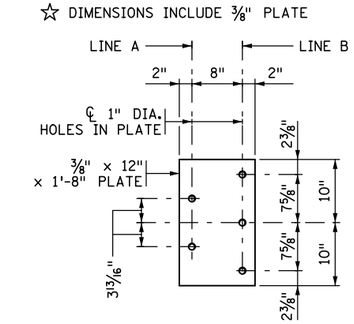

GUARDRAIL CONNECTION DETAIL

GALVANIZE AFTER FABRICATION PER SPEC. 3394
ESTIMATED WEIGHT = 34 LBS.

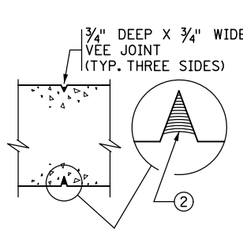

SECTION C-C

CAST-IN-PLACE CONSTRUCTION

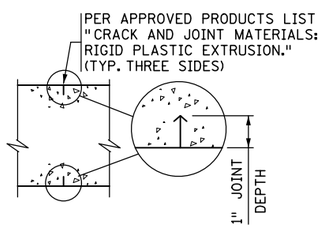

SECTION C-C

SLIPFORM CONSTRUCTION

CONTROL JOINT DETAILS

FOR SLIPFORM CONSTRUCTION: IMMEDIATELY AFTER CONCRETE IS PLACED AND WHILE IT IS STILL WET, CREATE A ONE INCH STRAIGHT GROOVE USING A TROWEL. INSERT RIGID PLASTIC EXTRUSION INTO GROOVE TO A DEPTH ⅛" BELOW THE SURFACE; FINISH OVER GROOVE COMPLETELY HIDING THE EXTRUSION.

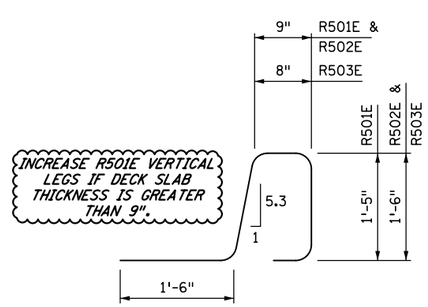

INCREASE R501E VERTICAL LEGS IF DECK SLAB THICKNESS IS GREATER THAN 9".

R501E, R502E, R503E

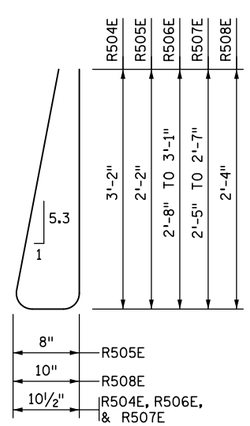

R504E, R505E, R506E, R507E, R508E

GENERAL NOTES

MEASURE PAYMENT LENGTH BETWEEN THE OUTSIDE ENDS OF THE BARRIER.

CONCRETE BARRIER = 537 LBS./FT. (0.133 CU. YDS./FT.)

FINISH ALL EDGES OF BARRIER WITH ½" CHAMFER, EXCEPT WHERE OTHERWISE NOTED.

SPACE CONTROL JOINTS AT 10 FT. MAXIMUM. REFER TO SUPERSTRUCTURE SHEET FOR SPECIFIC SPACING INFORMATION.

GUARDRAIL CONNECTION TO BE STRUCTURAL STEEL, SPEC. 3306.

GUARDRAIL CONNECTION AND NAME PLATE TO BE CONSIDERED INCIDENTAL TO BARRIER.

BARRIER QUANTITIES ARE LISTED IN SUMMARY OF QUANTITIES FOR SUPERSTRUCTURE.

① PLACE BAR ON TOP OF BOTTOM REINFORCEMENT MAT.

② JOINT SEALANT PER MnDOT APPROVED/QUALIFIED PRODUCTS LIST - CRACK AND JOINT MATERIALS - SILICONE JOINT SEALERS.

③ REMOVE CONCRETE FROM PIPE ENDS AFTER SLIPFORMING OR FORM REMOVAL.

④ REFER TO "WATERPROOF EXPANSION DEVICE" STANDARD PLANS FOR COVER PLATE DETAILS.

REVISION: MAY 10, 2017

APPROVED: AUGUST 24, 2016

Kevin Western

STATE BRIDGE ENGINEER

CERTIFIED BY _____ LICENSED PROFESSIONAL ENGINEER _____ DATE

NAME: LIC. NO.

TITLE: CONCRETE BARRIER 42" (TYPE S, TL-4)

PARAPET ABUTMENT WITH BRIDGE SLAB SIDEWALK AND GUARDRAIL CONNECTION (WITHOUT CONCRETE WEARING COURSE)

DES: DR: CHK: CHK:

SHEET NO. OF SHEETS

APPROVED:

FIG. 5-397.141(C)

BRIDGE NO.

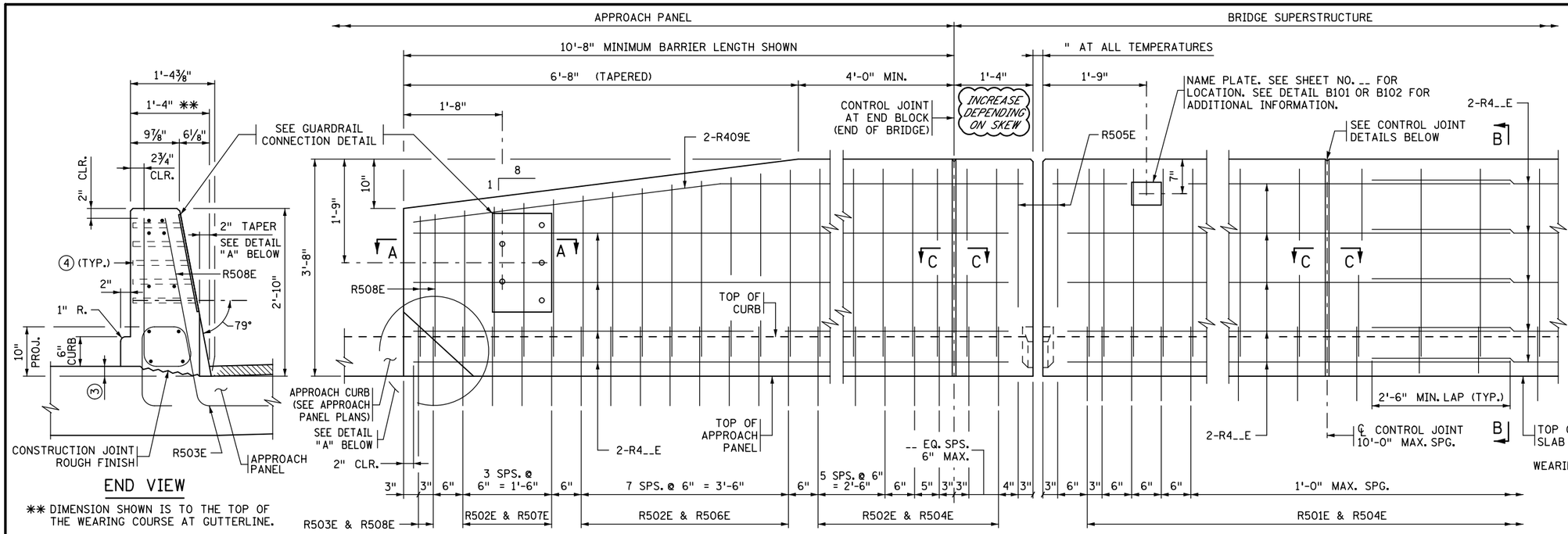

EXPANSION JOINT ⑤

EXPANSION DEVICE NOT SHOWN

CONTROL JOINT

INSIDE ELEVATION OF BARRIER

CONCRETE WEARING COURSE NOT SHOWN

BARRIER MEETS NCHRP 350 TL-4 REQUIREMENTS ON BRIDGE DECK AND TL-3 ON APPROACH PANEL.

END VIEW

** DIMENSION SHOWN IS TO THE TOP OF THE WEARING COURSE AT GUTTERLINE.

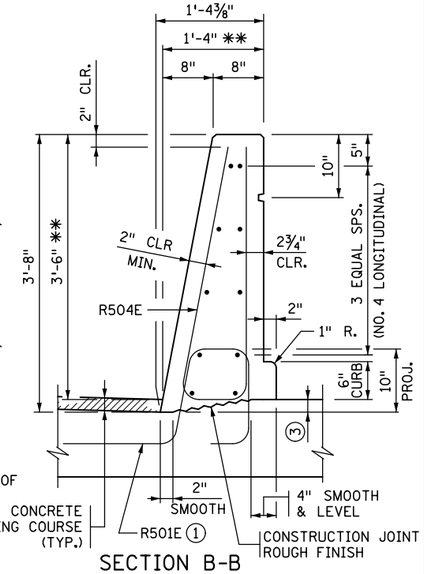

SECTION B-B

** DIMENSION SHOWN IS TO THE TOP OF THE WEARING COURSE AT GUTTERLINE.

BILL OF REINFORCEMENT FOR BARRIER

BAR	NO.	LENGTH	SHAPE	LOCATION
R501E		5'-4"		BARRIER DOWEL
R502E		5'-6"		BARRIER DOWEL
R503E		5'-5"		BARRIER DOWEL
R504E		7'-6"		BARRIER VERTICAL
R505E		5'-4"		BARRIER VERTICAL
R506E	-- SER. OF 4	6'-7" TO 7'-5"		BARRIER VERTICAL
R507E	-- SER. OF 4	6'-1" TO 6'-5"		BARRIER VERTICAL
R508E		5'-10"		BARRIER VERTICAL
R408E		11'-7"		BARRIER LONGIT.
R4__E				BARRIER LONGIT.
R4__E				BARRIER LONGIT.
R4__E				BARRIER LONGIT.
R4__E				BARRIER LONGIT.

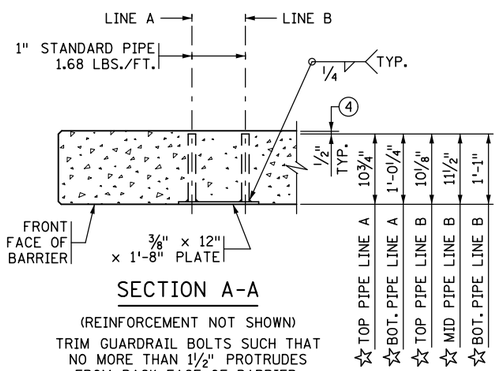

SECTION A-A

(REINFORCEMENT NOT SHOWN)

TRIM GUARDRAIL BOLTS SUCH THAT NO MORE THAN 1½" PROTRUDES FROM BACK FACE OF BARRIER.

☆ DIMENSIONS INCLUDE ⅜" PLATE

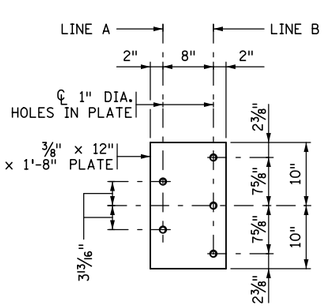

GUARDRAIL CONNECTION DETAIL

GALVANIZE AFTER FABRICATION PER SPEC. 3394
ESTIMATED WEIGHT = 34 LBS.

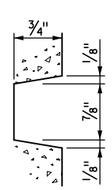

BARRIER RUSTICATION

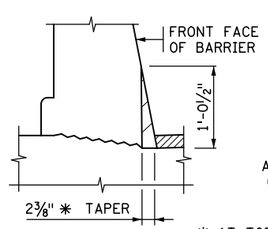

VIEW F-F

AT BARRIER END

* AT TOP OF STRUCTURAL SLAB

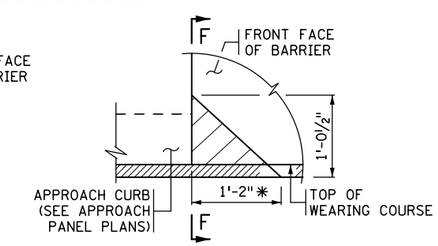

DETAIL "A"

ELEVATION VIEW
(WEARING COURSE SHOWN)

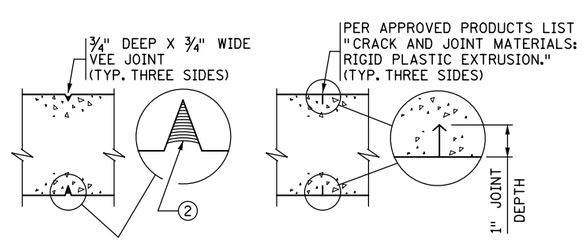

SECTION C-C

CAST-IN-PLACE CONSTRUCTION

SECTION C-C

SLIPFORM CONSTRUCTION

CONTROL JOINT DETAILS

FOR SLIPFORM CONSTRUCTION: IMMEDIATELY AFTER CONCRETE IS PLACED AND WHILE IT IS STILL WET, CREATE A ONE INCH STRAIGHT GROOVE USING A TROWEL. INSERT RIGID PLASTIC EXTRUSION INTO GROOVE TO A DEPTH ⅛" BELOW THE SURFACE; FINISH OVER GROOVE COMPLETELY HIDING THE EXTRUSION.

DESIGNER NOTE
(REMOVE PRIOR TO PLOTTING FINAL PLAN):

MINIMUM BARRIER LENGTH ON APPROACH PANEL IS 10'-8" WITH MINIMUM OF 22 R502E AND R503E DOWELS WITH ACCOMPANYING APPROPRIATE BARRIER VERTICAL BARS, 12" MAX. SPACING.
VERIFY APPROACH BARRIER LENGTH, NEED FOR A GUARDRAIL CONNECTION, AND VERTICAL TAPER WITH ROADWAY DESIGNER.
REFER TO MEMO TO DESIGNERS (2016-01) FOR ADDITIONAL REQUIREMENTS REGARDING BARRIER PLACEMENT AND LINK WITH ADJACENT RETAINING WALLS.

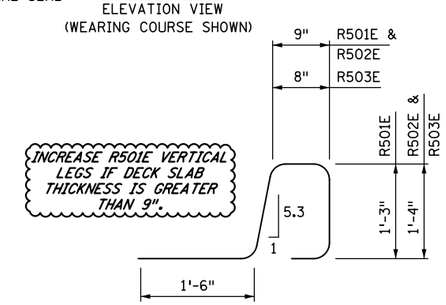

R501E, R502E, R503E

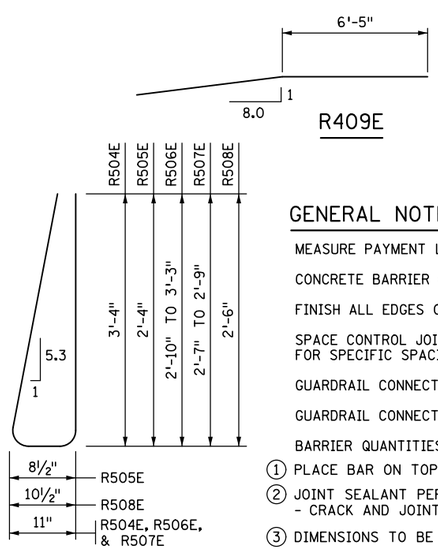

R504E, R505E, R506E, R507E, R508E

GENERAL NOTES

MEASURE PAYMENT LENGTH BETWEEN THE OUTSIDE ENDS OF THE BARRIER.

CONCRETE BARRIER = 556 LBS./FT. (0.137 CU. YDS./FT.)

FINISH ALL EDGES OF BARRIER WITH ½" CHAMFER, EXCEPT WHERE OTHERWISE NOTED.

SPACE CONTROL JOINTS AT 10 FT. MAXIMUM. REFER TO SUPERSTRUCTURE SHEET FOR SPECIFIC SPACING INFORMATION.

GUARDRAIL CONNECTION TO BE STRUCTURAL STEEL, SPEC. 3306.

GUARDRAIL CONNECTION AND NAME PLATE TO BE CONSIDERED INCIDENTAL TO BARRIER.

BARRIER QUANTITIES ARE LISTED IN SUMMARY OF QUANTITIES FOR SUPERSTRUCTURE.

① PLACE BAR ON TOP OF BOTTOM REINFORCEMENT MAT IN DECK.
② JOINT SEALANT PER MnDOT APPROVED/QUALIFIED PRODUCTS LIST - CRACK AND JOINT MATERIALS - SILICONE JOINT SEALERS.
③ DIMENSIONS TO BE DETERMINED BASED ON THE BRIDGE DECK SLOPE.
④ REMOVE CONCRETE FROM PIPE ENDS AFTER SLIPFORMING OR FORM REMOVAL.
⑤ REFER TO "WATERPROOF EXPANSION DEVICE" STANDARD PLANS FOR COVER PLATE DETAILS.

FIG. 5-397.141(D)

REVISION: MAY 10, 2017

APPROVED: AUGUST 24, 2016
Kevin Western
STATE BRIDGE ENGINEER

CERTIFIED BY _____ LICENSED PROFESSIONAL ENGINEER _____ DATE
NAME: LIC. NO.

TITLE: CONCRETE BARRIER 42" (TYPE S, TL-4)
PARAPET ABUTMENT WITH BRIDGE SLAB SIDEWALK AND GUARDRAIL CONNECTION (WITH 2" CONCRETE WEARING COURSE)

DES: DR: CHK: CHK:
SHEET NO. OF SHEETS

APPROVED: BRIDGE NO.

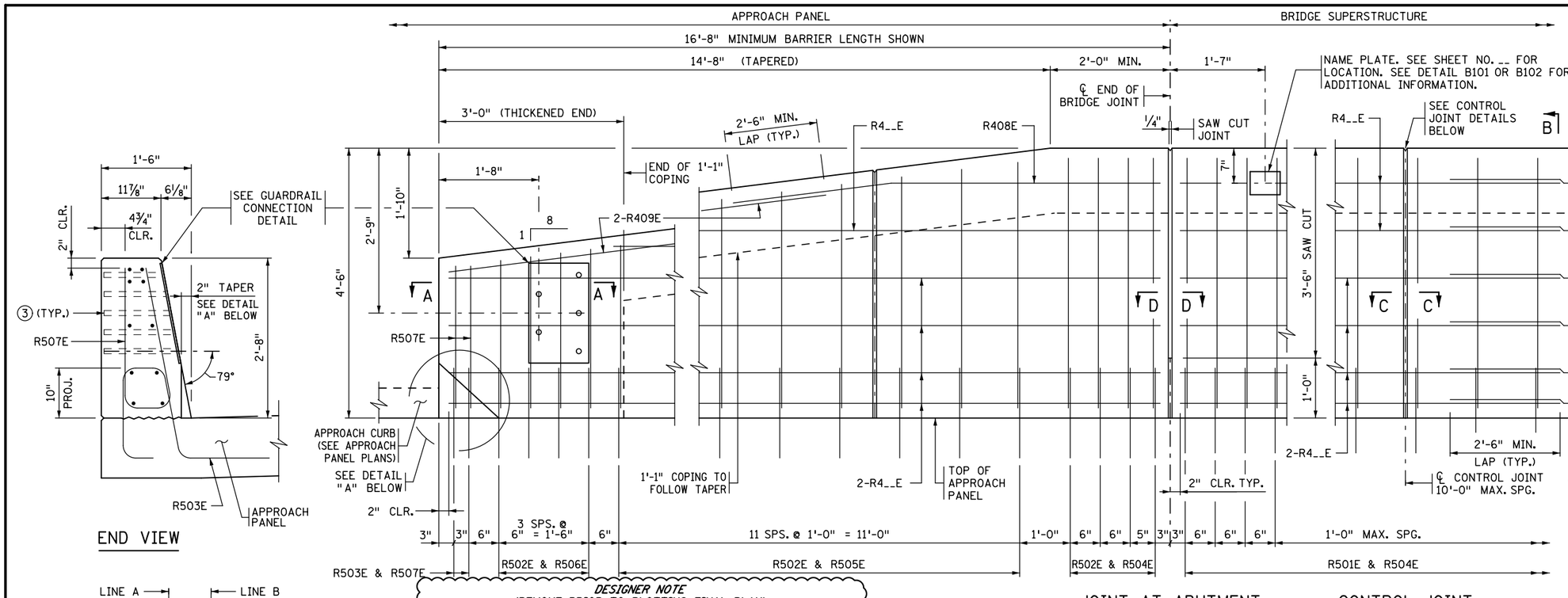

DESIGNER NOTE
(REMOVE PRIOR TO PLOTTING FINAL PLAN):

MINIMUM BARRIER LENGTH ON APPROACH PANEL IS 16'-8" WITH MINIMUM OF 22 R502E AND R503E DOWELS WITH ACCOMPANYING APPROPRIATE BARRIER VERTICAL BARS, 12" MAX. SPACING.
VERIFY APPROACH BARRIER LENGTH, NEED FOR A GUARDRAIL CONNECTION, AND VERTICAL TAPER WITH ROADWAY DESIGNER.
REFER TO MEMO TO DESIGNERS (2016-01) FOR ADDITIONAL REQUIREMENTS REGARDING BARRIER PLACEMENT.

BARRIER MEETS NCHRP 350 TL-4 REQUIREMENTS ON BRIDGE DECK AND TL-3 ON APPROACH PANEL.

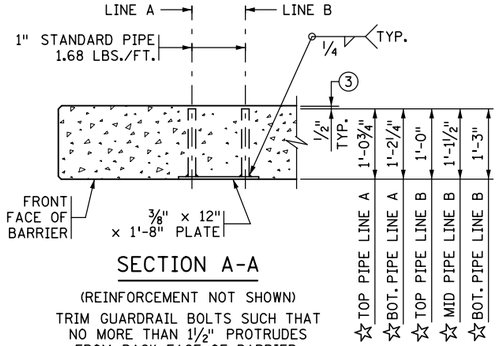

SECTION A-A

(REINFORCEMENT NOT SHOWN)

TRIM GUARDRAIL BOLTS SUCH THAT NO MORE THAN 1½" PROTRUDES FROM BACK FACE OF BARRIER.

☆ DIMENSIONS INCLUDE ⅜" PLATE

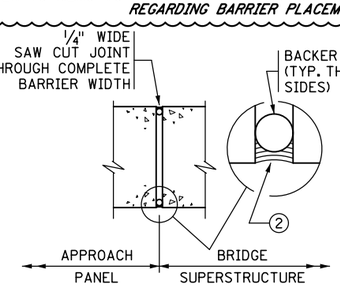

SECTION D-D

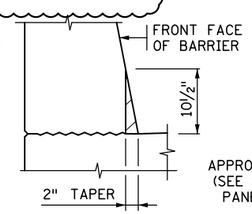

VIEW F-F

AT BARRIER END

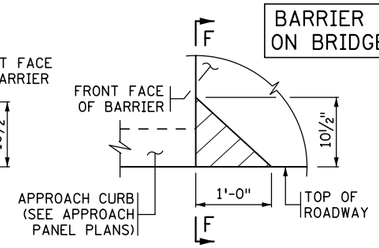

DETAIL "A"

ELEVATION VIEW

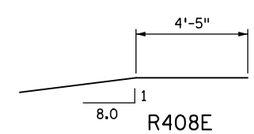

R408E

BILL OF REINFORCEMENT FOR BARRIER

BAR	NO.	LENGTH	SHAPE	LOCATION
R501E		5'-7"		BARRIER DOWEL
R502E		5'-9"		BARRIER DOWEL
R503E		5'-8"		BARRIER DOWEL
R504E		9'-2"		BARRIER VERTICAL
R505E	-- SER. OF 12	6'-3" TO 9'-1"		BARRIER VERTICAL
R506E	-- SER. OF 4	5'-9" TO 6'-1"		BARRIER VERTICAL
R507E		5'-6"		BARRIER VERTICAL
R408E		11'-8"		BARRIER LONGIT.
R409E		7'-7"		BARRIER LONGIT.
R4__E				BARRIER LONGIT.
R4__E				BARRIER LONGIT.
R4__E				BARRIER LONGIT.
R4__E				BARRIER LONGIT.
R4__E				BARRIER LONGIT.

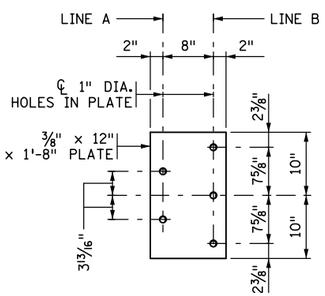

GUARDRAIL CONNECTION DETAIL

GALVANIZE AFTER FABRICATION PER SPEC. 3394
ESTIMATED WEIGHT = 35 LBS.

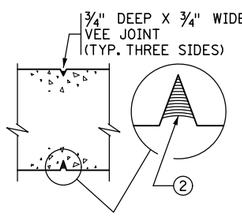

SECTION C-C

CAST-IN-PLACE CONSTRUCTION

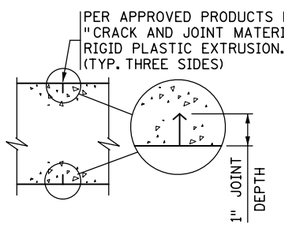

SECTION C-C

SLIPFORM CONSTRUCTION

CONTROL JOINT DETAILS

FOR SLIPFORM CONSTRUCTION: IMMEDIATELY AFTER CONCRETE IS PLACED AND WHILE IT IS STILL WET, CREATE A ONE INCH STRAIGHT GROOVE USING A TROWEL. INSERT RIGID PLASTIC EXTRUSION INTO GROOVE TO A DEPTH ⅛" BELOW THE SURFACE; FINISH OVER GROOVE COMPLETELY HIDING THE EXTRUSION.

INCREASE R501E VERTICAL LEGS IF DECK SLAB THICKNESS IS GREATER THAN 9".

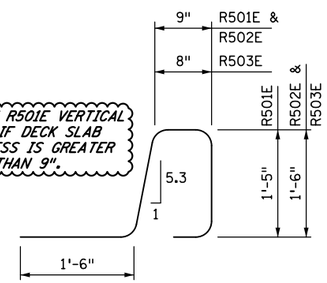

R501E, R502E, R503E

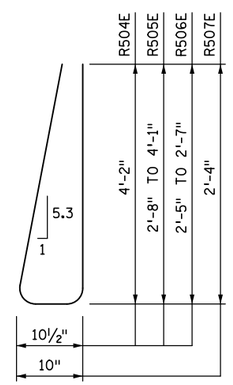

R504E, R505E, R506E, R507E

GENERAL NOTES

MEASURE PAYMENT LENGTH BETWEEN THE OUTSIDE ENDS OF THE BARRIER.

CONCRETE BARRIER = 639 LBS./FT. (0.158 CU. YDS./FT.)

FINISH ALL EDGES OF BARRIER WITH ½" CHAMFER, EXCEPT WHERE OTHERWISE NOTED.

SPACE CONTROL JOINTS AT 10 FT. MAXIMUM. REFER TO SUPERSTRUCTURE SHEET FOR SPECIFIC SPACING INFORMATION.

GUARDRAIL CONNECTION TO BE STRUCTURAL STEEL, SPEC. 3306.

GUARDRAIL CONNECTION AND NAME PLATE TO BE CONSIDERED INCIDENTAL TO BARRIER.

BARRIER QUANTITIES ARE LISTED IN SUMMARY OF QUANTITIES FOR SUPERSTRUCTURE.

① PLACE BAR ON TOP OF BOTTOM REINFORCEMENT MAT IN DECK.

② JOINT SEALANT PER MnDOT APPROVED/QUALIFIED PRODUCTS LIST - CRACK AND JOINT MATERIALS - SILICONE JOINT SEALERS.

③ REMOVE CONCRETE FROM PIPE ENDS AFTER SLIPFORMING OR FORM REMOVAL.

REVISION: MAY 10, 2017

APPROVED: AUGUST 24, 2016
Kevin Western
STATE BRIDGE ENGINEER

CERTIFIED BY _____ LICENSED PROFESSIONAL ENGINEER _____ DATE
NAME: LIC. NO.

TITLE: CONCRETE BARRIER 54" (TYPE S, TL-4)
INTEGRAL OR SEMI-INTEGRAL ABUTMENT WITH GUARDRAIL CONNECTION (WITHOUT CONCRETE WEARING COURSE)

DES: DR: CHK: CHK:

SHEET NO. OF SHEETS

FIG. 5-397.142(A)

APPROVED:

BRIDGE NO.

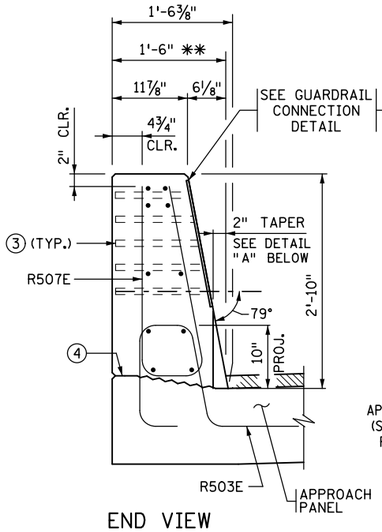

END VIEW

** DIMENSION SHOWN IS TO THE TOP OF THE WEARING COURSE AT GUTTERLINE.

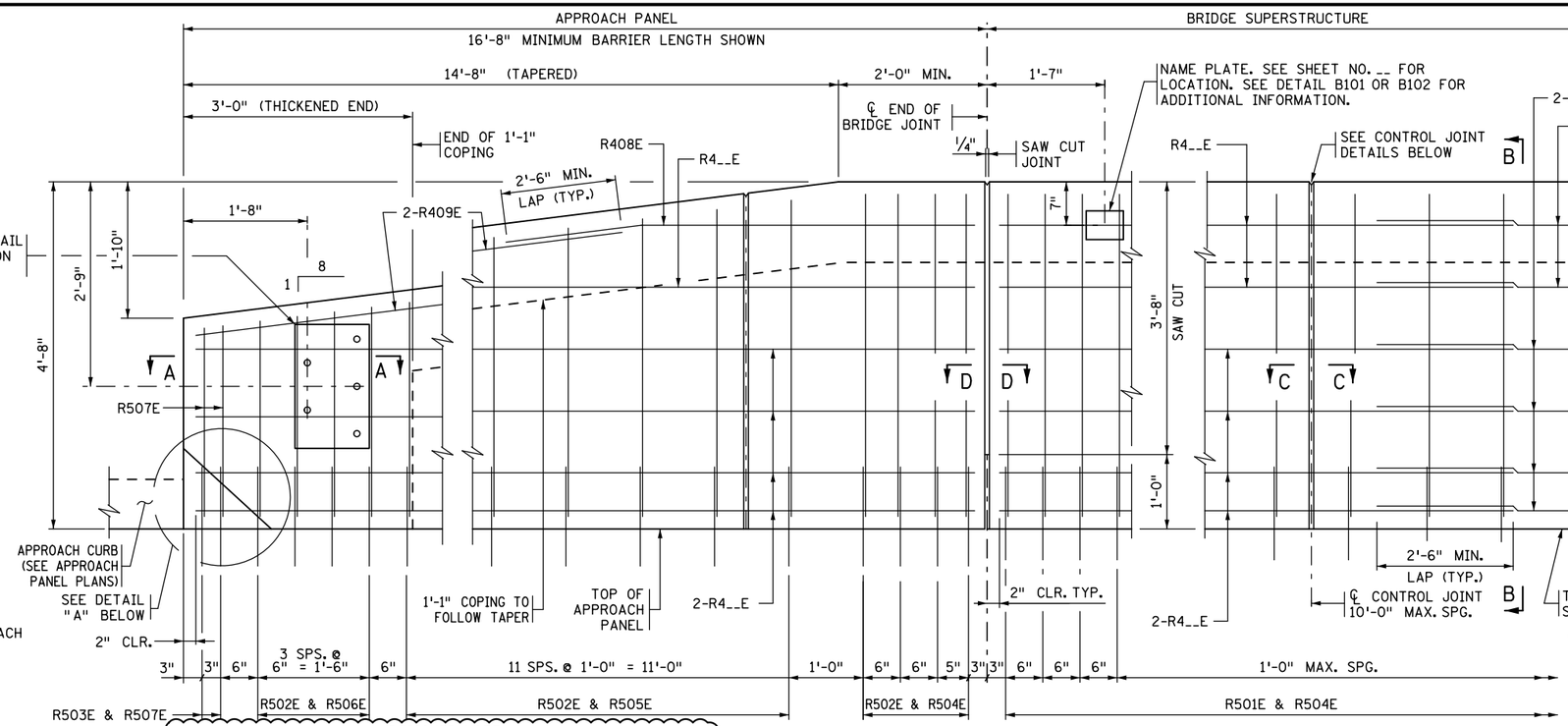

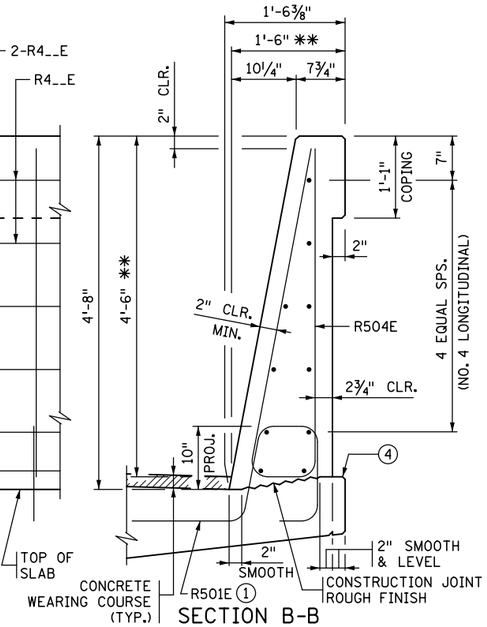

SECTION B-B

** DIMENSION SHOWN IS TO THE TOP OF THE WEARING COURSE AT GUTTERLINE.

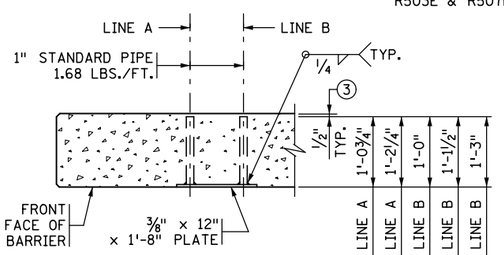

SECTION A-A

(REINFORCEMENT NOT SHOWN)

TRIM GUARDRAIL BOLTS SUCH THAT NO MORE THAN 1½" PROTRUDES FROM BACK FACE OF BARRIER.

☆ DIMENSIONS INCLUDE ⅜" PLATE

DESIGNER NOTE
(REMOVE PRIOR TO PLOTTING FINAL PLAN):

MINIMUM BARRIER LENGTH ON APPROACH PANEL IS 16'-8" WITH MINIMUM OF 22 R502E AND R503E DOWELS WITH ACCOMPANYING APPROPRIATE BARRIER VERTICAL BARS, 12" MAX. SPACING.
VERIFY APPROACH BARRIER LENGTH, NEED FOR A GUARDRAIL CONNECTION, AND VERTICAL TAPER WITH ROADWAY DESIGNER.
REFER TO MEMO TO DESIGNERS (2016-01) FOR ADDITIONAL REQUIREMENTS REGARDING BARRIER PLACEMENT.

JOINT AT ABUTMENT

(INTEGRAL OR SEMI-INTEGRAL ABUTMENT)

CONTROL JOINT

INSIDE ELEVATION OF BARRIER

CONCRETE WEARING COURSE NOT SHOWN

BARRIER MEETS NCHRP 350 TL-4 REQUIREMENTS ON BRIDGE DECK AND TL-3 ON APPROACH PANEL.

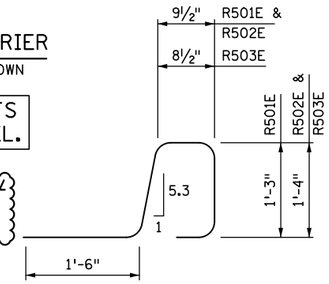

R501E, R502E & R503E

INCREASE R501E VERTICAL LEGS IF DECK SLAB THICKNESS IS GREATER THAN 9".

BILL OF REINFORCEMENT FOR BARRIER

BAR	NO.	LENGTH	SHAPE	LOCATION
R501E		5'-4"		BARRIER DOWEL
R502E		5'-6"		BARRIER DOWEL
R503E		5'-5"		BARRIER DOWEL
R504E		9'-6"		BARRIER VERTICAL
R505E	-- SER. OF 12	6'-7" TO 9'-5"		BARRIER VERTICAL
R506E	-- SER. OF 4	6'-1" TO 6'-5"		BARRIER VERTICAL
R507E		5'-6"		BARRIER VERTICAL
R408E		11'-8"		BARRIER LONGIT.
R409E		7'-7"		BARRIER LONGIT.
R4__E				BARRIER LONGIT.
R4__E				BARRIER LONGIT.
R4__E				BARRIER LONGIT.
R4__E				BARRIER LONGIT.
R4__E				BARRIER LONGIT.

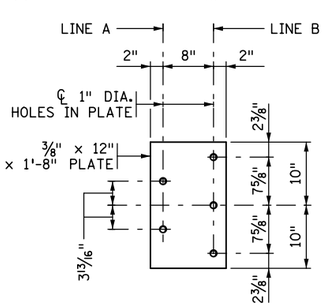

GUARDRAIL CONNECTION DETAIL

GALVANIZE AFTER FABRICATION PER SPEC. 3394
ESTIMATED WEIGHT = 35 LBS.

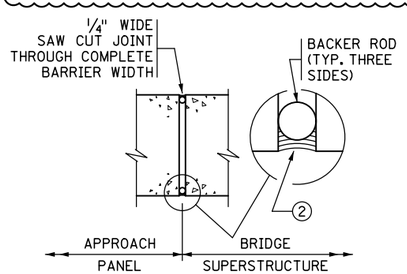

SECTION D-D

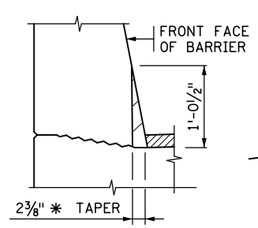

VIEW F-F

AT BARRIER END

R408E

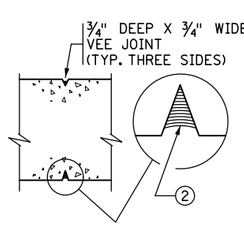

SECTION C-C

CAST-IN-PLACE CONSTRUCTION

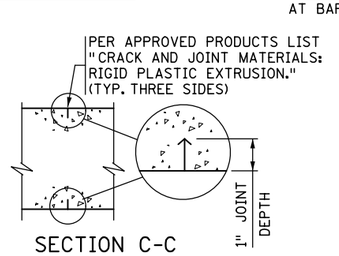

SECTION C-C

SLIPFORM CONSTRUCTION

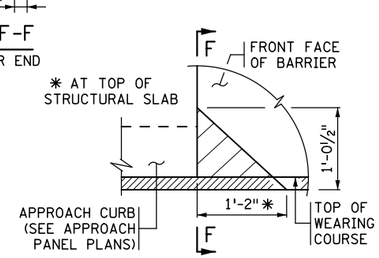

DETAIL "A"

ELEVATION VIEW
(WEARING COURSE SHOWN)

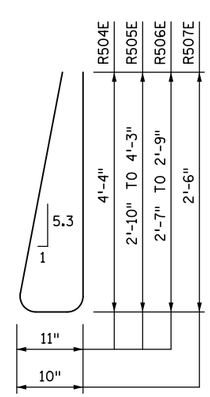

R504E, R505E, R506E, R507E

CONTROL JOINT DETAILS

FOR SLIPFORM CONSTRUCTION: IMMEDIATELY AFTER CONCRETE IS PLACED AND WHILE IT IS STILL WET, CREATE A ONE INCH STRAIGHT GROOVE USING A TROWEL. INSERT RIGID PLASTIC EXTRUSION INTO GROOVE TO A DEPTH ⅛" BELOW THE SURFACE; FINISH OVER GROOVE COMPLETELY HIDING THE EXTRUSION.

GENERAL NOTES

MEASURE PAYMENT LENGTH BETWEEN THE OUTSIDE ENDS OF THE BARRIER.

CONCRETE BARRIER = 656 LBS./FT. (0.162 CU. YDS./FT.)

FINISH ALL EDGES OF BARRIER WITH ½" CHAMFER, EXCEPT WHERE OTHERWISE NOTED.

SPACE CONTROL JOINTS AT 10 FT. MAXIMUM. REFER TO SUPERSTRUCTURE SHEET FOR SPECIFIC SPACING INFORMATION.

GUARDRAIL CONNECTION TO BE STRUCTURAL STEEL, SPEC. 3306.

GUARDRAIL CONNECTION AND NAME PLATE TO BE CONSIDERED INCIDENTAL TO BARRIER.

BARRIER QUANTITIES ARE LISTED IN SUMMARY OF QUANTITIES FOR SUPERSTRUCTURE.

① PLACE BAR ON TOP OF BOTTOM REINFORCEMENT MAT IN DECK.

② JOINT SEALANT PER MnDOT APPROVED/QUALIFIED PRODUCTS LIST - CRACK AND JOINT MATERIALS - SILICONE JOINT SEALERS.

③ REMOVE CONCRETE FROM PIPE ENDS AFTER SLIPFORMING OR FORM REMOVAL.

④ MATCH GUTTERLINE ELEVATION.

REVISION: MAY 10, 2017

APPROVED: AUGUST 24, 2016
Kevin Western
STATE BRIDGE ENGINEER

CERTIFIED BY _____ LICENSED PROFESSIONAL ENGINEER _____ DATE
NAME: LIC. NO.

TITLE: CONCRETE BARRIER 54" (TYPE S, TL-4)
INTEGRAL OR SEMI-INTEGRAL ABUTMENT WITH GUARDRAIL CONNECTION (WITH 2" CONCRETE WEARING COURSE)

DES: DR: CHK: CHK:
SHEET NO. OF SHEETS

APPROVED:

FIG. 5-397.142(B)

BRIDGE NO.

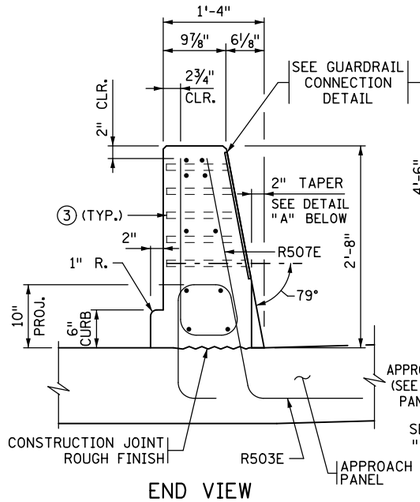

END VIEW

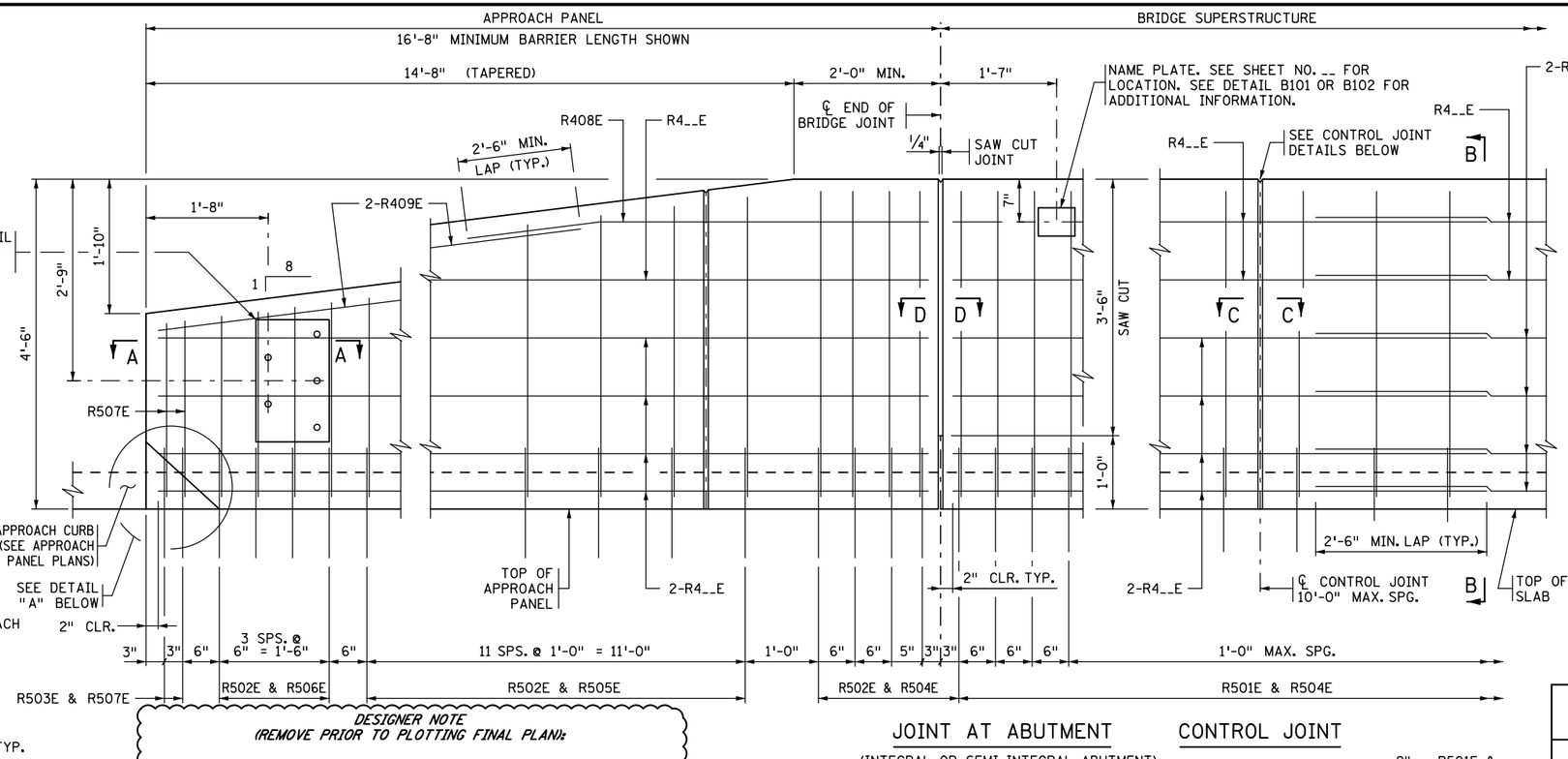

JOINT AT ABUTMENT

(INTEGRAL OR SEMI-INTEGRAL ABUTMENT)

CONTROL JOINT

INSIDE ELEVATION OF BARRIER

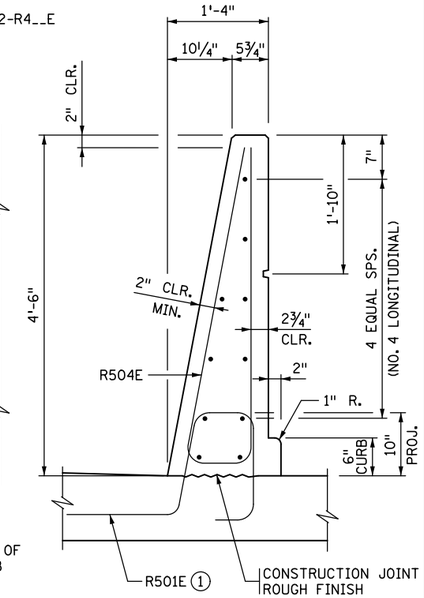

SECTION B-B

BARRIER MEETS NCHRP 350 TL-4 REQUIREMENTS ON BRIDGE DECK AND TL-3 ON APPROACH PANEL.

DESIGNER NOTE
(REMOVE PRIOR TO PLOTTING FINAL PLAN):

MINIMUM BARRIER LENGTH ON APPROACH PANEL IS 16'-8" WITH MINIMUM OF 22 R502E AND R503E DOWELS WITH ACCOMPANYING APPROPRIATE BARRIER VERTICAL BARS, 12" MAX. SPACING.
VERIFY APPROACH BARRIER LENGTH, NEED FOR A GUARDRAIL CONNECTION, AND VERTICAL TAPER WITH ROADWAY DESIGNER.
REFER TO MEMO TO DESIGNERS (2016-01) FOR ADDITIONAL REQUIREMENTS REGARDING BARRIER PLACEMENT.

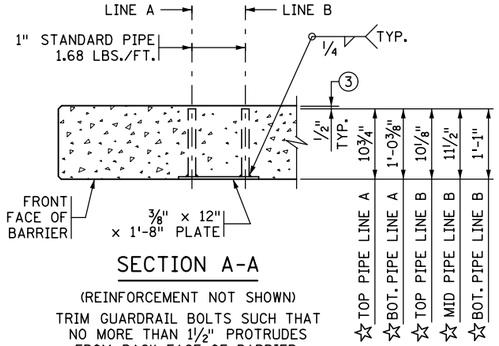

SECTION A-A

(REINFORCEMENT NOT SHOWN)

TRIM GUARDRAIL BOLTS SUCH THAT NO MORE THAN 1½" PROTRUDES FROM BACK FACE OF BARRIER.

☆ DIMENSIONS INCLUDE ⅜" PLATE

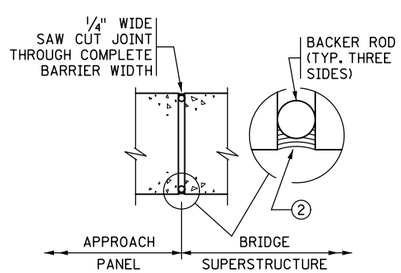

SECTION D-D

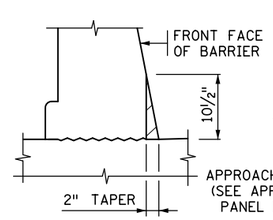

VIEW F-F

AT BARRIER END

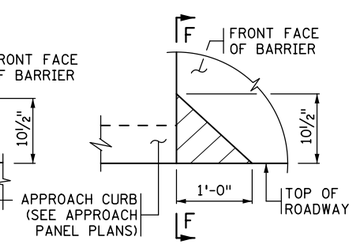

DETAIL "A"

ELEVATION VIEW

INCREASE R501E VERTICAL LEGS IF DECK SLAB THICKNESS IS GREATER THAN 9".

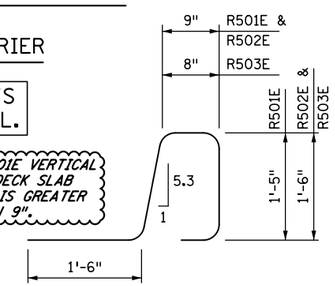

R501E, R502E, R503E

BILL OF REINFORCEMENT FOR BARRIER				
BAR	NO.	LENGTH	SHAPE	LOCATION
R501E		5'-7"		BARRIER DOWEL
R502E		5'-9"		BARRIER DOWEL
R503E		5'-8"		BARRIER DOWEL
R504E		9'-2"		BARRIER VERTICAL
R505E	-- SER. OF 12	6'-3" TO 9'-1"		BARRIER VERTICAL
R506E	-- SER. OF 4	5'-9" TO 6'-1"		BARRIER VERTICAL
R507E		5'-6"		BARRIER VERTICAL
R408E		11'-8"		BARRIER LONGIT.
R409E		7'-7"		BARRIER LONGIT.
R4__E				BARRIER LONGIT.
R4__E				BARRIER LONGIT.
R4__E				BARRIER LONGIT.
R4__E				BARRIER LONGIT.
R4__E				BARRIER LONGIT.

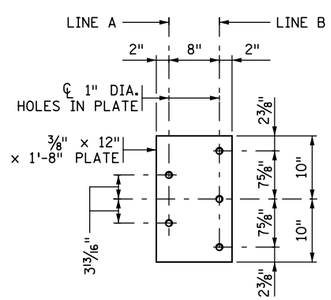

GUARDRAIL CONNECTION DETAIL

GALVANIZE AFTER FABRICATION PER SPEC. 3394
ESTIMATED WEIGHT = 34 LBS.

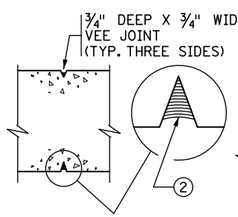

SECTION C-C

CAST-IN-PLACE CONSTRUCTION

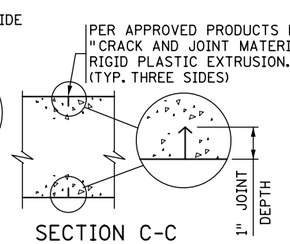

SECTION C-C

SLIPFORM CONSTRUCTION

CONTROL JOINT DETAILS

FOR SLIPFORM CONSTRUCTION: IMMEDIATELY AFTER CONCRETE IS PLACED AND WHILE IT IS STILL WET, CREATE A ONE INCH STRAIGHT GROOVE USING A TROWEL. INSERT RIGID PLASTIC EXTRUSION INTO GROOVE TO A DEPTH ⅛" BELOW THE SURFACE; FINISH OVER GROOVE COMPLETELY HIDING THE EXTRUSION.

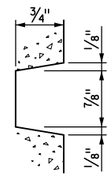

BARRIER RUSTICATION

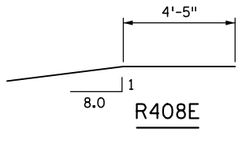

R408E

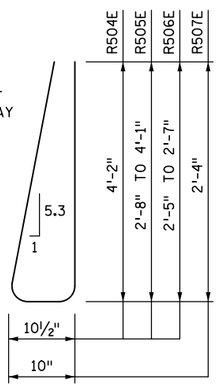

R504E, R505E, R506E, R507E

GENERAL NOTES

MEASURE PAYMENT LENGTH BETWEEN THE OUTSIDE ENDS OF THE BARRIER.

CONCRETE BARRIER = 624 LBS./FT. (0.154 CU. YDS./FT.)

FINISH ALL EDGES OF BARRIER WITH ½" CHAMFER, EXCEPT WHERE OTHERWISE NOTED.

SPACE CONTROL JOINTS AT 10 FT. MAXIMUM. REFER TO SUPERSTRUCTURE SHEET FOR SPECIFIC SPACING INFORMATION.

GUARDRAIL CONNECTION TO BE STRUCTURAL STEEL, SPEC. 3306.

GUARDRAIL CONNECTION AND NAME PLATE TO BE CONSIDERED INCIDENTAL TO BARRIER.

BARRIER QUANTITIES ARE LISTED IN SUMMARY OF QUANTITIES FOR SUPERSTRUCTURE.

① PLACE BAR ON TOP OF BOTTOM REINFORCEMENT MAT IN DECK.

② JOINT SEALANT PER MnDOT APPROVED/QUALIFIED PRODUCTS LIST - CRACK AND JOINT MATERIALS - SILICONE JOINT SEALERS.

③ REMOVE CONCRETE FROM PIPE ENDS AFTER SLIPFORMING OR FORM REMOVAL.

REVISION: MAY 10, 2017

APPROVED: AUGUST 24, 2016

Kevin Western
STATE BRIDGE ENGINEER

CERTIFIED BY _____ LICENSED PROFESSIONAL ENGINEER _____ DATE

NAME: LIC. NO.

TITLE: CONCRETE BARRIER 54" (TYPE S, TL-4)

INTEGRAL OR SEMI-INTEGRAL ABUTMENT WITH BRIDGE SLAB SIDEWALK AND GUARDRAIL CONNECTION (WITHOUT CONCRETE WEARING COURSE)

DES: DR: CHK: CHK:

SHEET NO. OF SHEETS

APPROVED:

FIG. 5-397.142(C)

BRIDGE NO.

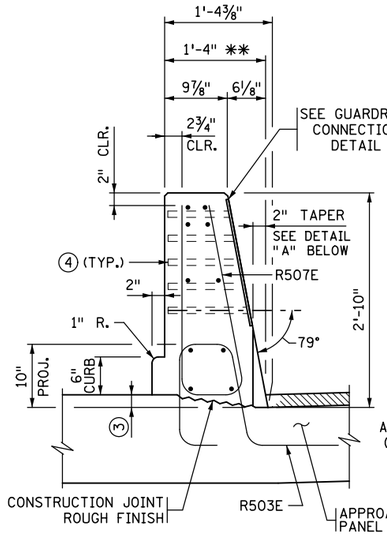

END VIEW

** DIMENSION SHOWN IS TO THE TOP OF THE WEARING COURSE AT GUTTERLINE.

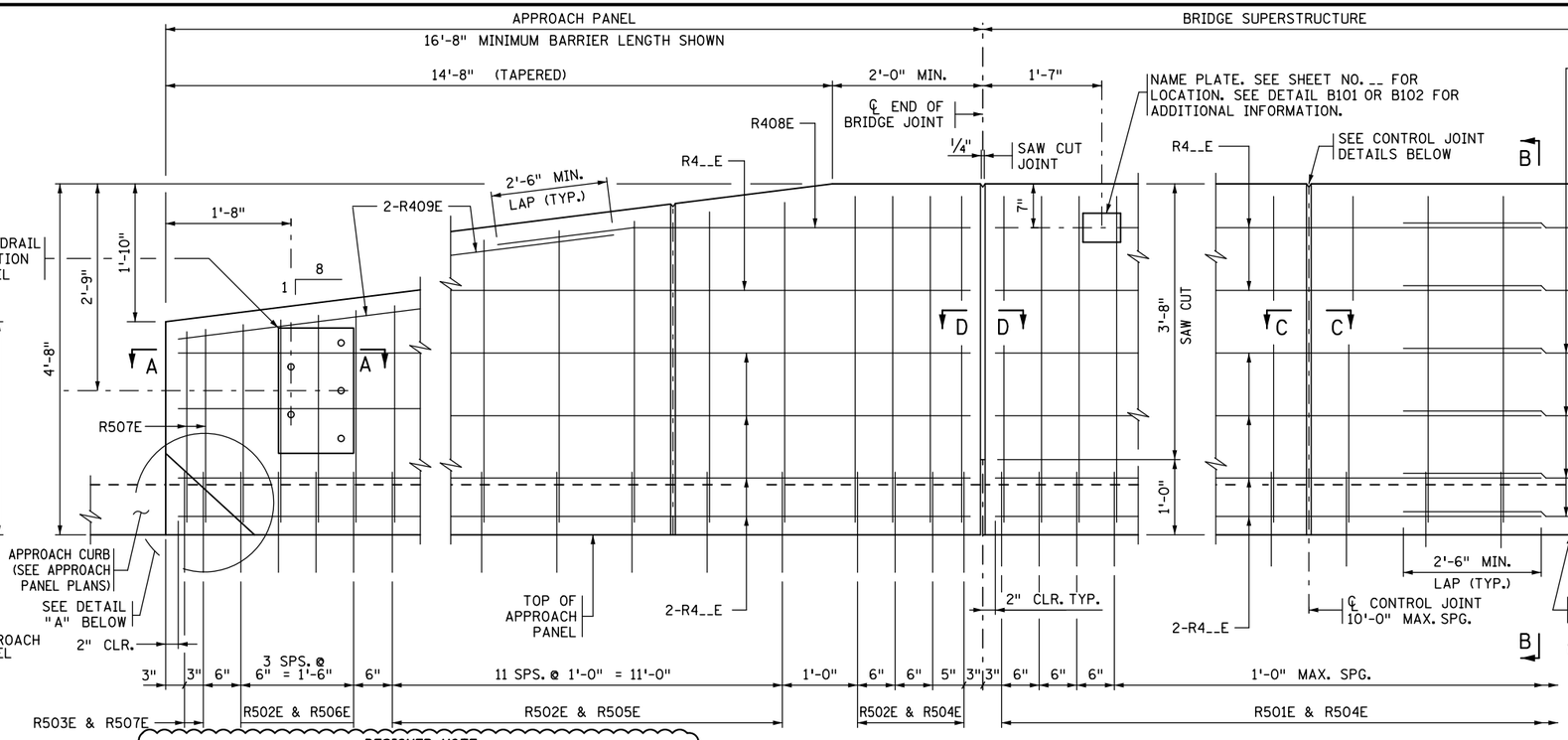

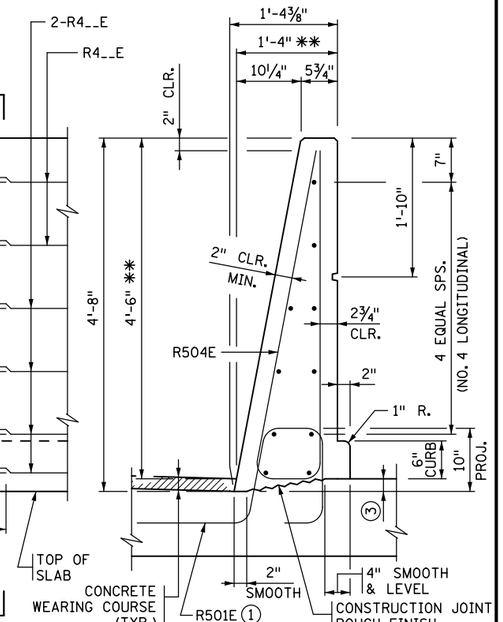

SECTION B-B

** DIMENSION SHOWN IS TO THE TOP OF THE WEARING COURSE AT GUTTERLINE.

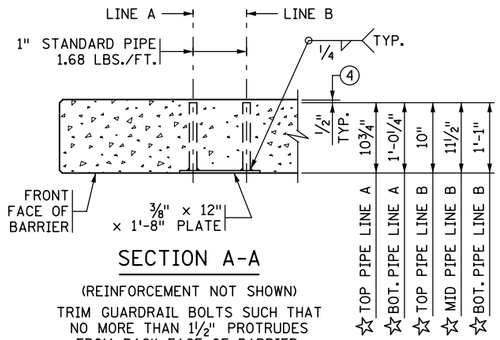

SECTION A-A

(REINFORCEMENT NOT SHOWN)

TRIM GUARDRAIL BOLTS SUCH THAT NO MORE THAN 1 1/2" PROTRUDES FROM BACK FACE OF BARRIER.

☆ DIMENSIONS INCLUDE 3/8" PLATE

DESIGNER NOTE
(REMOVE PRIOR TO PLOTTING FINAL PLAN):

MINIMUM BARRIER LENGTH ON APPROACH PANEL IS 16'-8" WITH MINIMUM OF 22 R502E AND R503E DOWELS WITH ACCOMPANYING APPROPRIATE BARRIER VERTICAL BARS, 12" MAX. SPACING.
VERIFY APPROACH BARRIER LENGTH, NEED FOR A GUARDRAIL CONNECTION, AND VERTICAL TAPER WITH ROADWAY DESIGNER.
REFER TO MEMO TO DESIGNERS (2016-01) FOR ADDITIONAL REQUIREMENTS REGARDING BARRIER PLACEMENT.

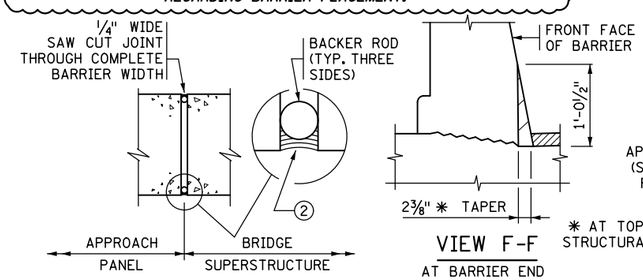

SECTION D-D

VIEW F-F

AT BARRIER END

* AT TOP OF STRUCTURAL SLAB

JOINT AT ABUTMENT

(INTEGRAL OR SEMI-INTEGRAL ABUTMENT)

CONTROL JOINT

INSIDE ELEVATION OF BARRIER

CONCRETE WEARING COURSE NOT SHOWN

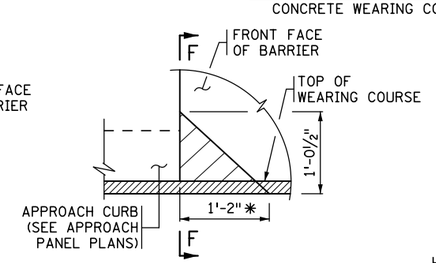

DETAIL "A"

ELEVATION VIEW

(WEARING COURSE SHOWN)

INCREASE R501E VERTICAL LEGS IF DECK SLAB THICKNESS IS GREATER THAN 9".

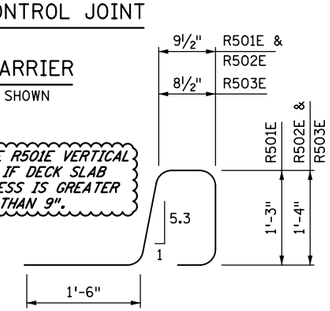

R501E, R502E & R503E

BILL OF REINFORCEMENT FOR BARRIER

BAR	NO.	LENGTH	SHAPE	LOCATION
R501E		5'-4"		BARRIER DOWEL
R502E		5'-6"		BARRIER DOWEL
R503E		5'-5"		BARRIER DOWEL
R504E		9'-6"		BARRIER DOWEL
R505E	-- SER. OF 12	6'-7" TO 9'-5"		BARRIER VERTICAL
R506E	-- SER. OF 4	6'-1" TO 6'-5"		BARRIER VERTICAL
R507E		5'-6"		BARRIER DOWEL
R408E		11'-8"		BARRIER LONGIT.
R409E		7'-7"		BARRIER LONGIT.
R4__E				BARRIER LONGIT.
R4__E				BARRIER LONGIT.
R4__E				BARRIER LONGIT.
R4__E				BARRIER LONGIT.

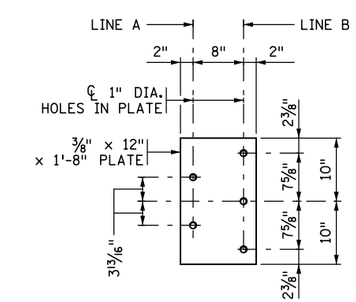

GUARDRAIL CONNECTION DETAIL

GALVANIZE AFTER FABRICATION PER SPEC. 3394
ESTIMATED WEIGHT = 34 LBS.

BARRIER MEETS NCHRP 350 TL-4 REQUIREMENTS ON BRIDGE DECK AND TL-3 ON APPROACH PANEL.

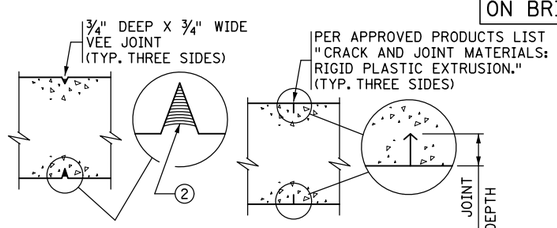

SECTION C-C

CAST-IN-PLACE CONSTRUCTION

SECTION C-C

SLIPFORM CONSTRUCTION

CONTROL JOINT DETAILS

FOR SLIPFORM CONSTRUCTION: IMMEDIATELY AFTER CONCRETE IS PLACED AND WHILE IT IS STILL WET, CREATE A ONE INCH STRAIGHT GROOVE USING A TROWEL. INSERT RIGID PLASTIC EXTRUSION INTO GROOVE TO A DEPTH 1/8" BELOW THE SURFACE; FINISH OVER GROOVE COMPLETELY HIDING THE EXTRUSION.

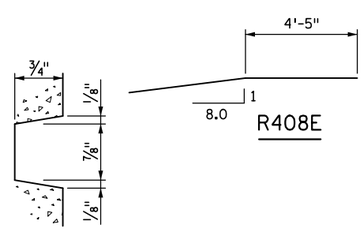

BARRIER RUSTICATION

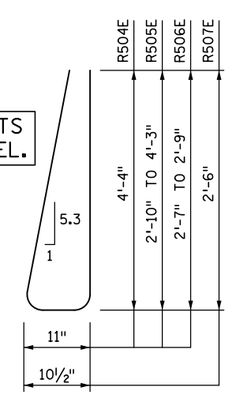

R504E, R505E, R506E, R507E

GENERAL NOTES

MEASURE PAYMENT LENGTH BETWEEN THE OUTSIDE ENDS OF THE BARRIER.

CONCRETE BARRIER = 643 LBS./FT. (0.159 CU. YDS./FT.)

FINISH ALL EDGES OF BARRIER WITH 1/2" CHAMFER, EXCEPT WHERE OTHERWISE NOTED.

SPACE CONTROL JOINTS AT 10 FT. MAXIMUM. REFER TO SUPERSTRUCTURE SHEET FOR SPECIFIC SPACING INFORMATION.

GUARDRAIL CONNECTION TO BE STRUCTURAL STEEL, SPEC. 3306.

GUARDRAIL CONNECTION AND NAME PLATE TO BE CONSIDERED INCIDENTAL TO BARRIER.

BARRIER QUANTITIES ARE LISTED IN SUMMARY OF QUANTITIES FOR SUPERSTRUCTURE.

① PLACE BAR ON TOP OF BOTTOM REINFORCEMENT MAT IN DECK.

② JOINT SEALANT PER MnDOT APPROVED/QUALIFIED PRODUCTS LIST - CRACK AND JOINT MATERIALS - SILICONE JOINT SEALERS.

③ DIMENSIONS TO BE DETERMINED BASED ON THE BRIDGE DECK SLOPE.

④ REMOVE CONCRETE FROM PIPE ENDS AFTER SLIPFORMING OR FORM REMOVAL.

REVISION: MAY 10, 2017

APPROVED: AUGUST 24, 2016

STATE BRIDGE ENGINEER

CERTIFIED BY _____ LICENSED PROFESSIONAL ENGINEER _____ DATE

NAME: LIC. NO.

TITLE: CONCRETE BARRIER 54" (TYPE S, TL-4)

INTEGRAL OR SEMI-INTEGRAL ABUTMENT WITH BRIDGE SLAB SIDEWALK AND GUARDRAIL CONNECTION (WITH 2" CONCRETE WEARING COURSE)

DES: DR: CHK: CHK:

SHEET NO. OF SHEETS

APPROVED:

FIG. 5-397.142(D)

BRIDGE NO.

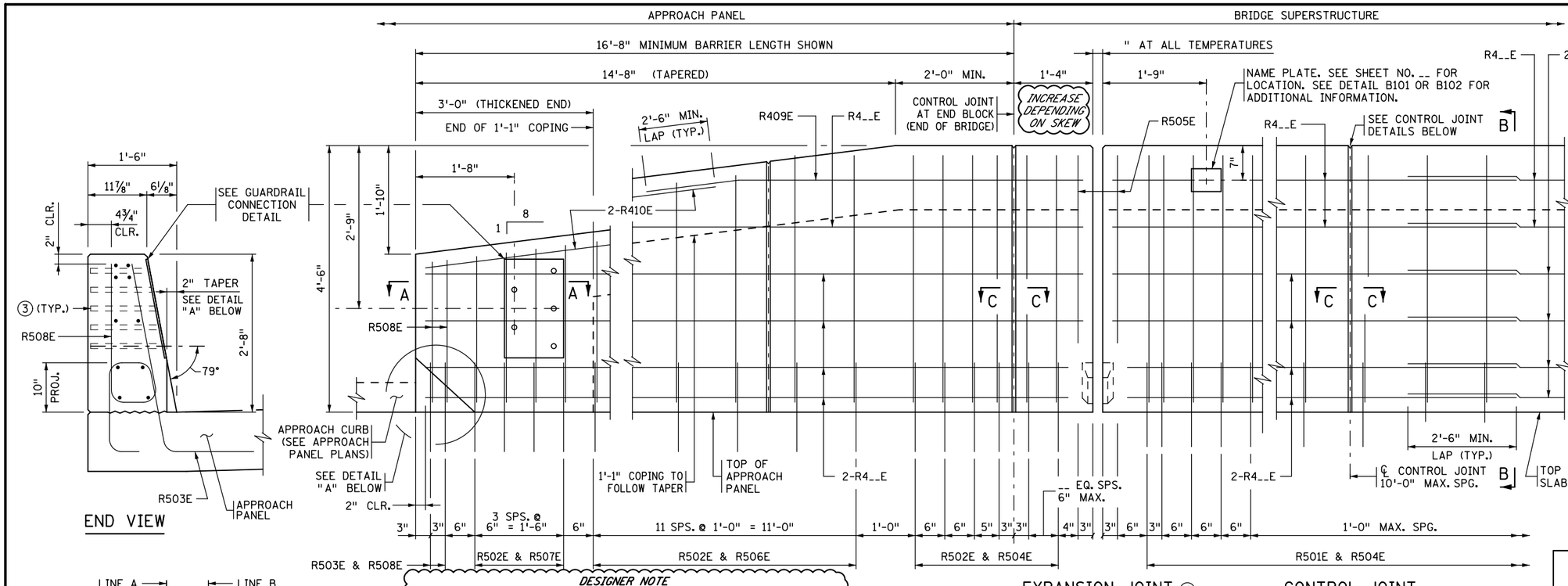

INSIDE ELEVATION OF BARRIER

END VIEW

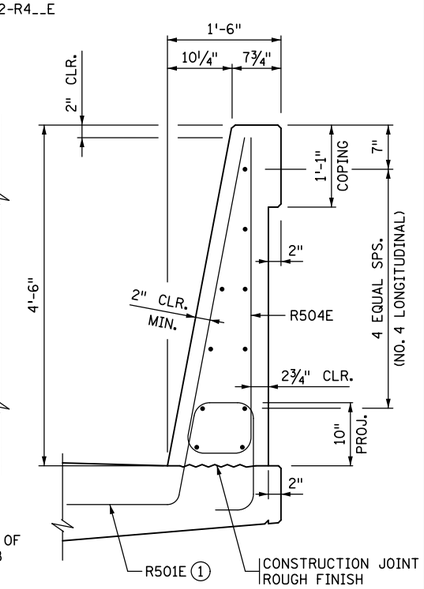

SECTION B-B

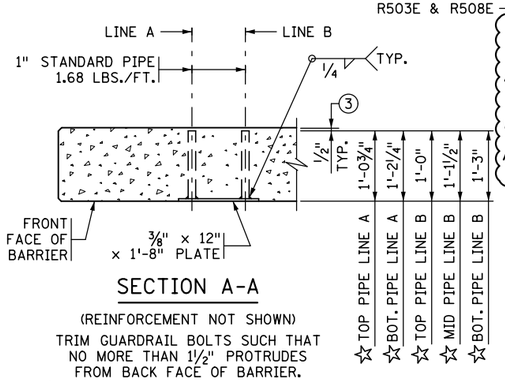

SECTION A-A

(REINFORCEMENT NOT SHOWN)

TRIM GUARDRAIL BOLTS SUCH THAT NO MORE THAN 1½" PROTRUDES FROM BACK FACE OF BARRIER.

☆ DIMENSIONS INCLUDE ⅜" PLATE

DESIGNER NOTE
(REMOVE PRIOR TO PLOTTING FINAL PLAN):

MINIMUM BARRIER LENGTH ON APPROACH PANEL IS 16'-8" WITH MINIMUM OF 22 R502E AND R503E DOWELS WITH ACCOMPANYING APPROPRIATE BARRIER VERTICAL BARS, 12" MAX. SPACING.
VERIFY APPROACH BARRIER LENGTH, NEED FOR A GUARDRAIL CONNECTION, AND VERTICAL TAPER WITH ROADWAY DESIGNER.
REFER TO MEMO TO DESIGNERS (2016-01) FOR ADDITIONAL REQUIREMENTS REGARDING BARRIER PLACEMENT.

EXPANSION JOINT ④

EXPANSION DEVICE NOT SHOWN

CONTROL JOINT

BARRIER MEETS NCHRP 350 TL-4 REQUIREMENTS ON BRIDGE DECK AND TL-3 ON APPROACH PANEL.

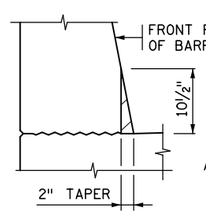

VIEW F-F

AT BARRIER END

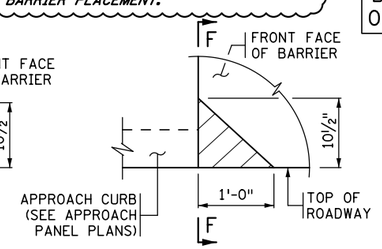

DETAIL "A"

ELEVATION VIEW

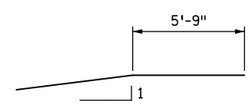

R409E

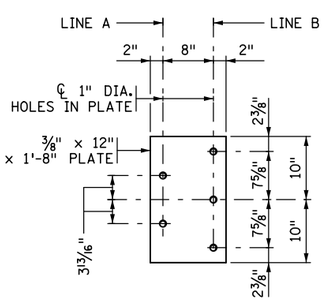

GUARDRAIL CONNECTION DETAIL

GALVANIZE AFTER FABRICATION PER SPEC. 3394
ESTIMATED WEIGHT = 35 LBS.

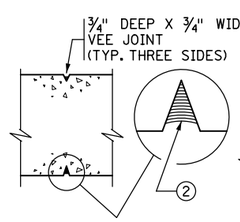

SECTION C-C

CAST-IN-PLACE CONSTRUCTION

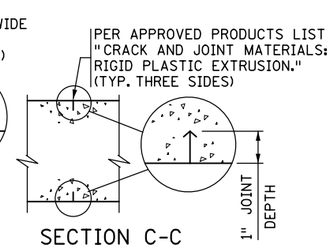

SECTION C-C

SLIPFORM CONSTRUCTION

CONTROL JOINT DETAILS

FOR SLIPFORM CONSTRUCTION: IMMEDIATELY AFTER CONCRETE IS PLACED AND WHILE IT IS STILL WET, CREATE A ONE INCH STRAIGHT GROOVE USING A TROWEL. INSERT RIGID PLASTIC EXTRUSION INTO GROOVE TO A DEPTH ⅛" BELOW THE SURFACE; FINISH OVER GROOVE COMPLETELY HIDING THE EXTRUSION.

INCREASE R501E VERTICAL LEGS IF DECK SLAB THICKNESS IS GREATER THAN 9".

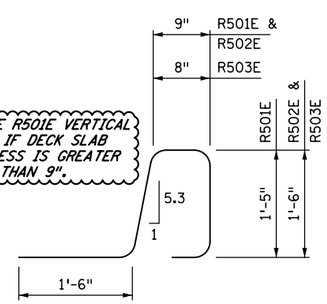

R501E, R502E, R503E

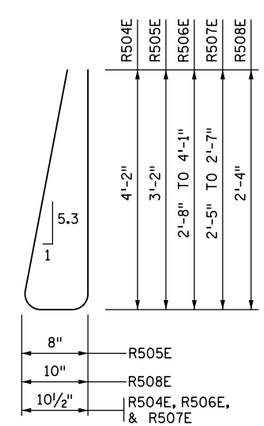

R504E, R505E, R506E, R507E & R508E

BILL OF REINFORCEMENT FOR BARRIER

BAR	NO.	LENGTH	SHAPE	LOCATION
R501E		5'-7"		BARRIER DOWEL
R502E		5'-9"		BARRIER DOWEL
R503E		5'-8"		BARRIER DOWEL
R504E		9'-2"		BARRIER VERTICAL
R505E		7'-0"		BARRIER VERTICAL
R506E	-- SER. OF 12	6'-3" TO 9'-1"		BARRIER VERTICAL
R507E	-- SER. OF 4	5'-9" TO 6'-1"		BARRIER VERTICAL
R508E		5'-6"		BARRIER VERTICAL
R409E		13'-0"		BARRIER LONGIT.
R410E		7'-7"		BARRIER LONGIT.
R4__E				BARRIER LONGIT.
R4__E				BARRIER LONGIT.
R4__E				BARRIER LONGIT.
R4__E				BARRIER LONGIT.

GENERAL NOTES

MEASURE PAYMENT LENGTH BETWEEN THE OUTSIDE ENDS OF THE BARRIER.

CONCRETE BARRIER = 639 LBS./FT. (0.158 CU. YDS./FT.)

FINISH ALL EDGES OF BARRIER WITH ½" CHAMFER, EXCEPT WHERE OTHERWISE NOTED.

SPACE CONTROL JOINTS AT 10 FT. MAXIMUM. REFER TO SUPERSTRUCTURE SHEET FOR SPECIFIC SPACING INFORMATION.

GUARDRAIL CONNECTION TO BE STRUCTURAL STEEL, SPEC. 3306.

GUARDRAIL CONNECTION AND NAME PLATE TO BE CONSIDERED INCIDENTAL TO BARRIER.

BARRIER QUANTITIES ARE LISTED IN SUMMARY OF QUANTITIES FOR SUPERSTRUCTURE.

① PLACE BAR ON TOP OF BOTTOM REINFORCEMENT MAT IN DECK.

② JOINT SEALANT PER MnDOT APPROVED/QUALIFIED PRODUCTS LIST - CRACK AND JOINT MATERIALS - SILICONE JOINT SEALERS.

③ REMOVE CONCRETE FROM PIPE ENDS AFTER SLIPFORMING OR FORM REMOVAL.

④ REFER TO "WATERPROOF EXPANSION DEVICE" STANDARD PLANS FOR COVER PLATE DETAILS.

FIG. 5-397.143(A)

REVISION: MAY 10, 2017

APPROVED: AUGUST 24, 2016

Kevin Western
STATE BRIDGE ENGINEER

CERTIFIED BY _____ LICENSED PROFESSIONAL ENGINEER _____ DATE

NAME: LIC. NO.

TITLE: CONCRETE BARRIER 54" (TYPE S, TL-4)
PARAPET ABUTMENT WITH GUARDRAIL CONNECTION (WITHOUT CONCRETE WEARING COURSE)

DES: DR: CHK: CHK:

APPROVED:

SHEET NO. OF SHEETS

BRIDGE NO.

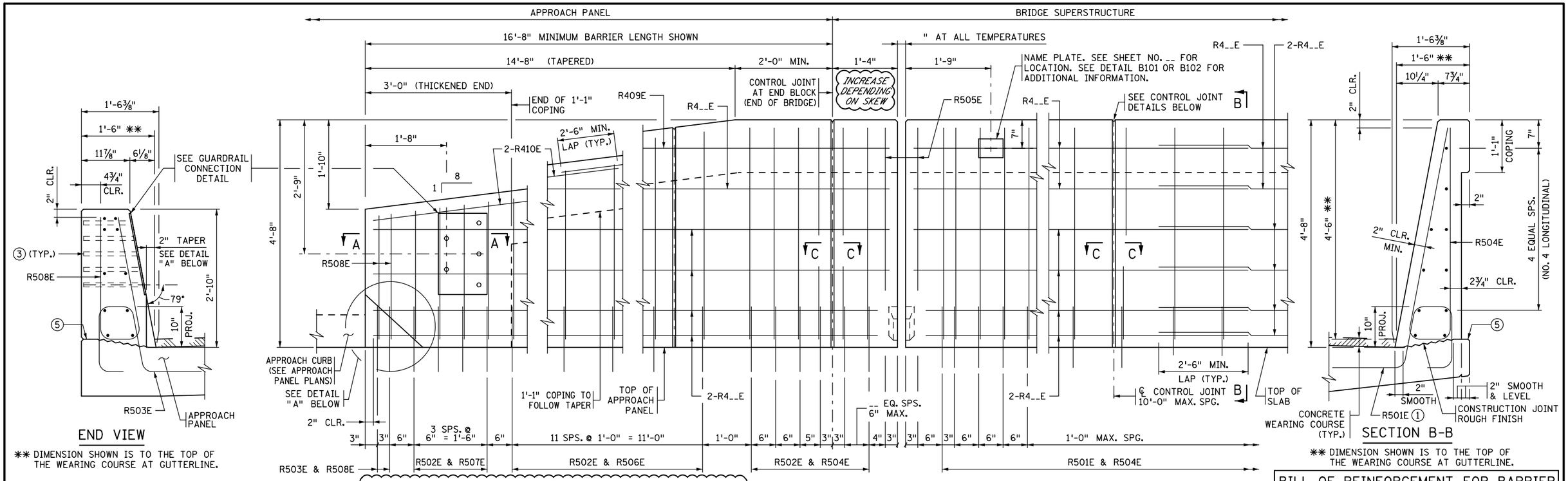

END VIEW

** DIMENSION SHOWN IS TO THE TOP OF THE WEARING COURSE AT GUTTERLINE.

SECTION A-A

(REINFORCEMENT NOT SHOWN)

TRIM GUARDRAIL BOLTS SUCH THAT NO MORE THAN 1 1/2" PROTRUDES FROM BACK FACE OF BARRIER.

☆ DIMENSIONS INCLUDE 3/8" PLATE

DESIGNER NOTE
(REMOVE PRIOR TO PLOTTING FINAL PLAN):

MINIMUM BARRIER LENGTH ON APPROACH PANEL IS 16'-8" WITH MINIMUM OF 22 R502E AND R503E DOWELS WITH ACCOMPANYING APPROPRIATE BARRIER VERTICAL BARS, 12" MAX. SPACING.
VERIFY APPROACH BARRIER LENGTH, NEED FOR A GUARDRAIL CONNECTION, AND VERTICAL TAPER WITH ROADWAY DESIGNER.
REFER TO MEMO TO DESIGNERS (2016-01) FOR ADDITIONAL REQUIREMENTS REGARDING BARRIER PLACEMENT AND LINK WITH ADJACENT RETAINING WALLS.

EXPANSION JOINT ④

EXPANSION DEVICE NOT SHOWN

CONTROL JOINT

INSIDE ELEVATION OF BARRIER

CONCRETE WEARING COURSE NOT SHOWN

BARRIER MEETS NCHRP 350 TL-4 REQUIREMENTS ON BRIDGE DECK AND TL-3 ON APPROACH PANEL.

** DIMENSION SHOWN IS TO THE TOP OF THE WEARING COURSE AT GUTTERLINE.

SECTION B-B

BILL OF REINFORCEMENT FOR BARRIER

BAR	NO.	LENGTH	SHAPE	LOCATION
R501E		5'-4"		BARRIER DOWEL
R502E		5'-6"		BARRIER DOWEL
R503E		5'-5"		BARRIER DOWEL
R504E		9'-6"		BARRIER VERTICAL
R505E		7'-4"		BARRIER VERTICAL
R506E	-- SER. OF 12	6'-7" TO 9'-5"		BARRIER VERTICAL
R507E	-- SER. OF 4	6'-1" TO 6'-5"		BARRIER VERTICAL
R508E		5'-6"		BARRIER VERTICAL
R409E		13'-0"		BARRIER LONGIT.
R410E		7'-7"		BARRIER LONGIT.
R4__E				BARRIER LONGIT.
R4__E				BARRIER LONGIT.
R4__E				BARRIER LONGIT.
R4__E				BARRIER LONGIT.

GENERAL NOTES

MEASURE PAYMENT LENGTH BETWEEN THE OUTSIDE ENDS OF THE BARRIER.

CONCRETE BARRIER = 656 LBS./FT. (0.162 CU. YDS./FT.)

FINISH ALL EDGES OF BARRIER WITH 1/2" CHAMFER, EXCEPT WHERE OTHERWISE NOTED.

SPACE CONTROL JOINTS AT 10 FT. MAXIMUM. REFER TO SUPERSTRUCTURE SHEET FOR SPECIFIC SPACING INFORMATION.

GUARDRAIL CONNECTION TO BE STRUCTURAL STEEL, SPEC. 3306.

GUARDRAIL CONNECTION AND NAME PLATE TO BE CONSIDERED INCIDENTAL TO BARRIER.

BARRIER QUANTITIES ARE LISTED IN SUMMARY OF QUANTITIES FOR SUPERSTRUCTURE.

① PLACE BAR ON TOP OF BOTTOM REINFORCEMENT MAT IN DECK.

② JOINT SEALANT PER MnDOT APPROVED/QUALIFIED PRODUCTS LIST - CRACK AND JOINT MATERIALS - SILICONE JOINT SEALERS.

③ REMOVE CONCRETE FROM PIPE ENDS AFTER SLIPFORMING OR FORM REMOVAL.

④ REFER TO "WATERPROOF EXPANSION DEVICE" STANDARD PLANS FOR COVER PLATE DETAILS.

⑤ MATCH GUTTERLINE ELEVATION.

REVISION: MAY 10, 2017

APPROVED: AUGUST 24, 2016

Kevin Western
STATE BRIDGE ENGINEER

CERTIFIED BY _____ LICENSED PROFESSIONAL ENGINEER _____ DATE

NAME: LIC. NO.

TITLE: CONCRETE BARRIER 54" (TYPE S, TL-4)
PARAPET ABUTMENT WITH GUARDRAIL CONNECTION (WITH 2" CONCRETE WEARING COURSE)

DES: DR: CHK: CHK:

SHEET NO. OF SHEETS

APPROVED:

FIG. 5-397.143(B)

BRIDGE NO.

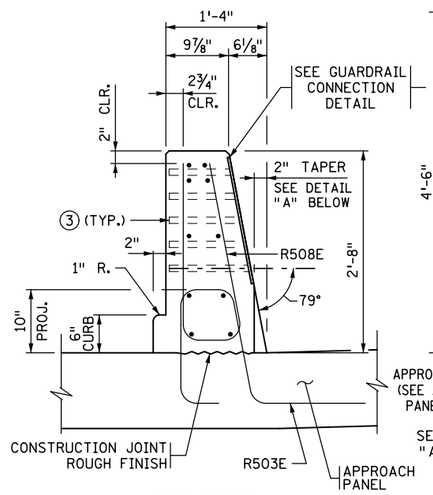

END VIEW

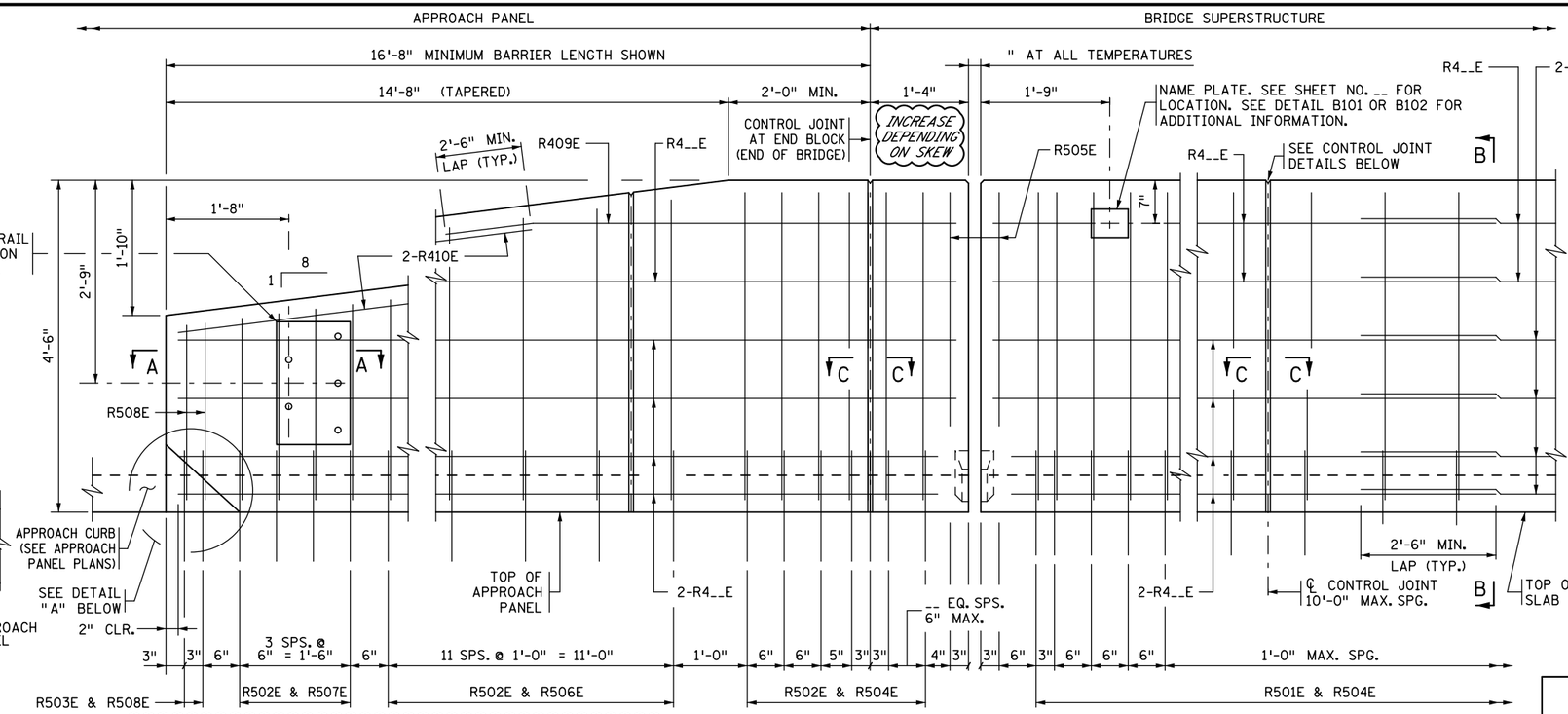

EXPANSION JOINT ④

EXPANSION DEVICE NOT SHOWN

CONTROL JOINT

INSIDE ELEVATION OF BARRIER

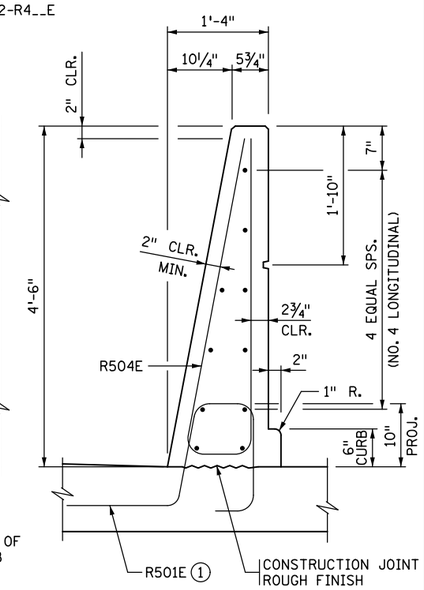

SECTION B-B

BILL OF REINFORCEMENT FOR BARRIER				
BAR	NO.	LENGTH	SHAPE	LOCATION
R501E		5'-7"		BARRIER DOWEL
R502E		5'-9"		BARRIER DOWEL
R503E		5'-8"		BARRIER DOWEL
R504E		9'-2"		BARRIER VERTICAL
R505E		7'-0"		BARRIER VERTICAL
R506E	-- SER. OF 12	6'-3" TO 9'-1"		BARRIER VERTICAL
R507E	-- SER. OF 4	5'-9" TO 6'-1"		BARRIER VERTICAL
R508E		5'-6"		BARRIER VERTICAL
R409E		13'-0"		BARRIER LONGIT.
R410E		7'-7"		BARRIER LONGIT.
R4__E				BARRIER LONGIT.
R4__E				BARRIER LONGIT.
R4__E				BARRIER LONGIT.
R4__E				BARRIER LONGIT.

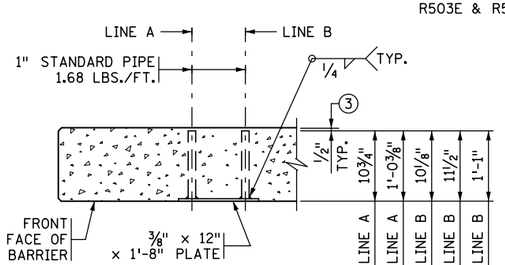

SECTION A-A

(REINFORCEMENT NOT SHOWN)

TRIM GUARDRAIL BOLTS SUCH THAT NO MORE THAN 1½" PROTRUDES FROM BACK FACE OF BARRIER.

☆ DIMENSIONS INCLUDE ⅜" PLATE

DESIGNER NOTE
(REMOVE PRIOR TO PLOTTING FINAL PLAN):

MINIMUM BARRIER LENGTH ON APPROACH PANEL IS 16'-8" WITH MINIMUM OF 22 R502E AND R503E DOWELS WITH ACCOMPANYING APPROPRIATE BARRIER VERTICAL BARS, 12" MAX. SPACING.
VERIFY APPROACH BARRIER LENGTH, NEED FOR A GUARDRAIL CONNECTION, AND VERTICAL TAPER WITH ROADWAY DESIGNER.
REFER TO MEMO TO DESIGNERS (2016-01) FOR ADDITIONAL REQUIREMENTS REGARDING BARRIER PLACEMENT.

BARRIER MEETS NCHRP 350 TL-4 REQUIREMENTS ON BRIDGE DECK AND TL-3 ON APPROACH PANEL.

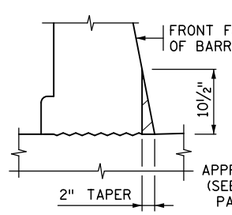

VIEW F-F

AT BARRIER END

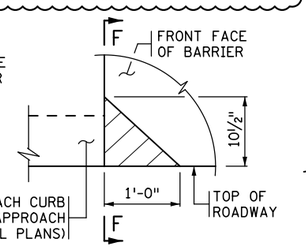

DETAIL "A"

ELEVATION VIEW

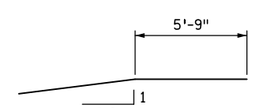

R409E

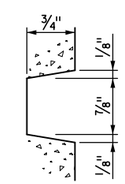

BARRIER RUSTICATION

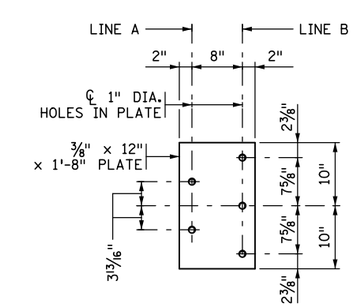

GUARDRAIL CONNECTION DETAIL

GALVANIZE AFTER FABRICATION PER SPEC. 3394

ESTIMATED WEIGHT = 34 LBS.

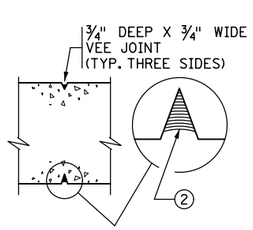

SECTION C-C

CAST-IN-PLACE CONSTRUCTION

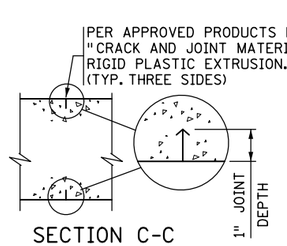

SECTION C-C

SLIPFORM CONSTRUCTION

CONTROL JOINT DETAILS

FOR SLIPFORM CONSTRUCTION: IMMEDIATELY AFTER CONCRETE IS PLACED AND WHILE IT IS STILL WET, CREATE A ONE INCH STRAIGHT GROOVE USING A TROWEL. INSERT RIGID PLASTIC EXTRUSION INTO GROOVE TO A DEPTH ⅛" BELOW THE SURFACE; FINISH OVER GROOVE COMPLETELY HIDING THE EXTRUSION.

INCREASE R501E VERTICAL LEGS IF DECK SLAB THICKNESS IS GREATER THAN 9".

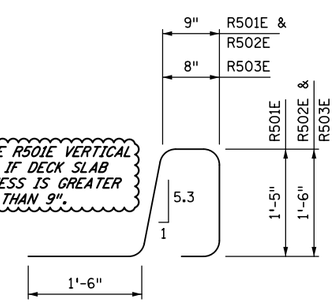

R501E, R502E, R503E

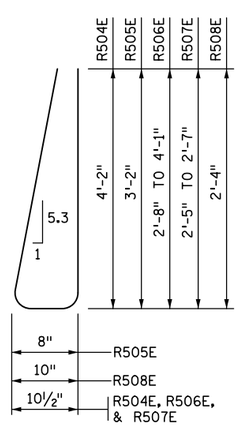

R504E, R505E, R506E, R507E & R508E

GENERAL NOTES

MEASURE PAYMENT LENGTH BETWEEN THE OUTSIDE ENDS OF THE BARRIER.

CONCRETE BARRIER = 624 LBS./FT. (0.154 CU. YDS./FT.)

FINISH ALL EDGES OF BARRIER WITH ½" CHAMFER, EXCEPT WHERE OTHERWISE NOTED.

SPACE CONTROL JOINTS AT 10 FT. MAXIMUM. REFER TO SUPERSTRUCTURE SHEET FOR SPECIFIC SPACING INFORMATION.

GUARDRAIL CONNECTION TO BE STRUCTURAL STEEL, SPEC. 3306.

GUARDRAIL CONNECTION AND NAME PLATE TO BE CONSIDERED INCIDENTAL TO BARRIER.

BARRIER QUANTITIES ARE LISTED IN SUMMARY OF QUANTITIES FOR SUPERSTRUCTURE.

① PLACE BAR ON TOP OF BOTTOM REINFORCEMENT MAT IN DECK.

② JOINT SEALANT PER MnDOT APPROVED/QUALIFIED PRODUCTS LIST - CRACK AND JOINT MATERIALS - SILICONE JOINT SEALERS.

③ REMOVE CONCRETE FROM PIPE ENDS AFTER SLIPFORMING OR FORM REMOVAL.

④ REFER TO "WATERPROOF EXPANSION DEVICE" STANDARD PLANS FOR COVER PLATE DETAILS.

REVISION: MAY 10, 2017

APPROVED: AUGUST 24, 2016

Kevin Western

STATE BRIDGE ENGINEER

CERTIFIED BY _____ LICENSED PROFESSIONAL ENGINEER _____ DATE

NAME: LIC. NO.

TITLE: CONCRETE BARRIER 54" (TYPE S, TL-4)

PARAPET ABUTMENT WITH BRIDGE SLAB SIDEWALK AND GUARDRAIL CONNECTION (WITHOUT CONCRETE WEARING COURSE)

DES: DR: CHK: CHK:

SHEET NO. OF SHEETS

APPROVED:

FIG. 5-397.143(C)

BRIDGE NO.

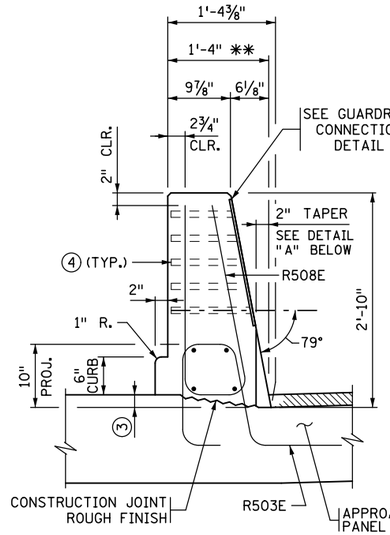

END VIEW

** DIMENSION SHOWN IS TO THE TOP OF THE WEARING COURSE AT GUTTERLINE.

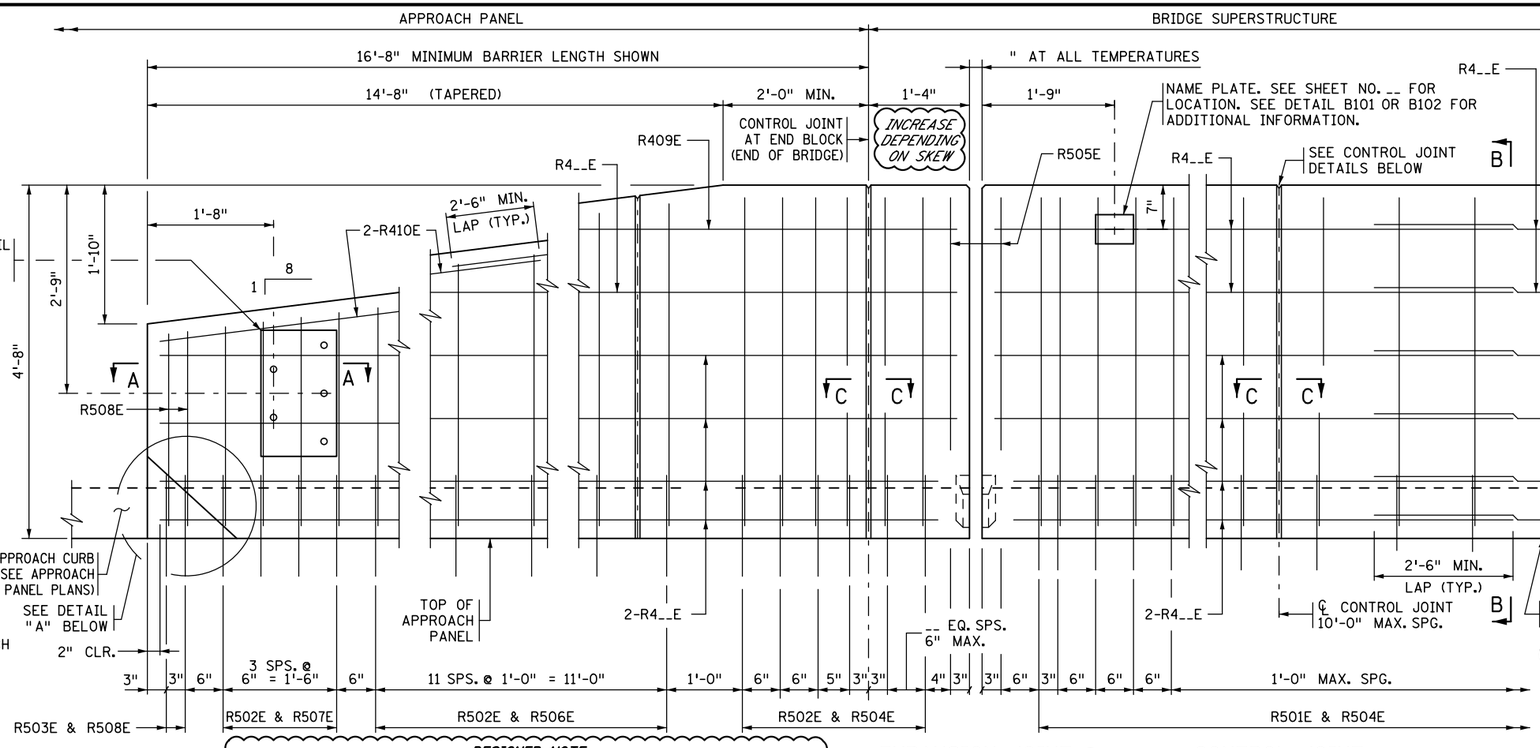

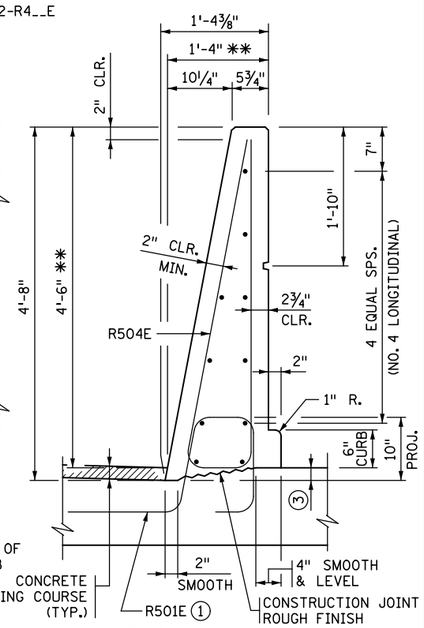

SECTION B-B

** DIMENSION SHOWN IS TO THE TOP OF THE WEARING COURSE AT GUTTERLINE.

INSIDE ELEVATION OF BARRIER

CONCRETE WEARING COURSE NOT SHOWN

EXPANSION JOINT 5

EXPANSION DEVICE NOT SHOWN

CONTROL JOINT

DESIGNER NOTE
(REMOVE PRIOR TO PLOTTING FINAL PLAN):

MINIMUM BARRIER LENGTH ON APPROACH PANEL IS 16'-8" WITH MINIMUM OF 22 R502E AND R503E DOWELS WITH ACCOMPANYING APPROPRIATE BARRIER VERTICAL BARS, 12" MAX. SPACING.
VERIFY APPROACH BARRIER LENGTH, NEED FOR A GUARDRAIL CONNECTION, AND VERTICAL TAPER WITH ROADWAY DESIGNER.
REFER TO MEMO TO DESIGNERS (2016-01) FOR ADDITIONAL REQUIREMENTS REGARDING BARRIER PLACEMENT AND LINK WITH ADJACENT RETAINING WALLS.

BARRIER MEETS NCHRP 350 TL-4 REQUIREMENTS ON BRIDGE DECK AND TL-3 ON APPROACH PANEL.

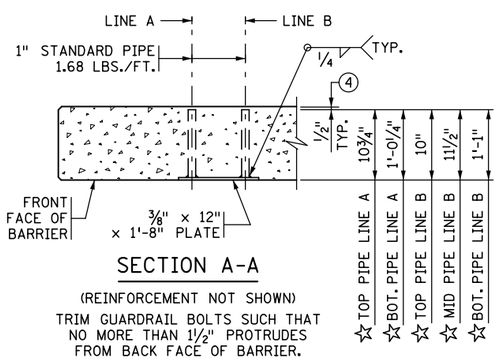

SECTION A-A

(REINFORCEMENT NOT SHOWN)

TRIM GUARDRAIL BOLTS SUCH THAT NO MORE THAN 1 1/2" PROTRUDES FROM BACK FACE OF BARRIER.

☆ DIMENSIONS INCLUDE 3/8" PLATE

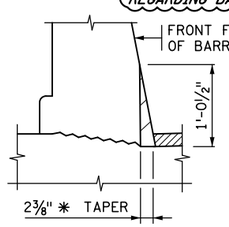

VIEW F-F

AT BARRIER END

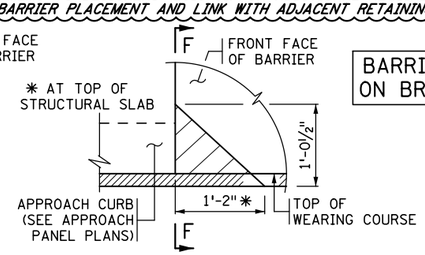

DETAIL "A"

ELEVATION VIEW
(WEARING COURSE SHOWN)

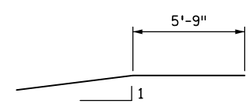

R409E

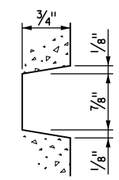

BARRIER RUSTICATION

BILL OF REINFORCEMENT FOR BARRIER				
BAR	NO.	LENGTH	SHAPE	LOCATION
R501E		5'-4"		BARRIER DOWEL
R502E		5'-6"		BARRIER DOWEL
R503E		5'-5"		BARRIER DOWEL
R504E		9'-6"		BARRIER VERTICAL
R505E		7'-4"		BARRIER VERTICAL
R506E	-- SER. OF 12	6'-7" TO 9'-5"		BARRIER VERTICAL
R507E	-- SER. OF 4	6'-1" TO 6'-5"		BARRIER VERTICAL
R508E		5'-6"		BARRIER VERTICAL
R409E		13'-0"		BARRIER LONGIT.
R410E		7'-7"		BARRIER LONGIT.
R4__E				BARRIER LONGIT.
R4__E				BARRIER LONGIT.
R4__E				BARRIER LONGIT.
R4__E				BARRIER LONGIT.

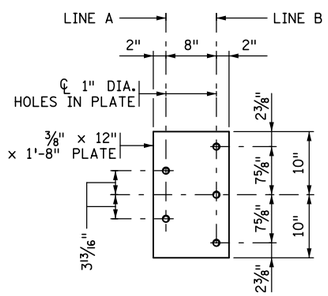

GUARDRAIL CONNECTION DETAIL

GALVANIZE AFTER FABRICATION PER SPEC. 3394
ESTIMATED WEIGHT = 34 LBS.

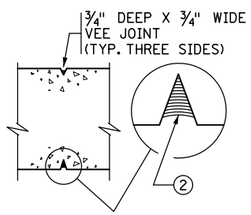

SECTION C-C

CAST-IN-PLACE CONSTRUCTION

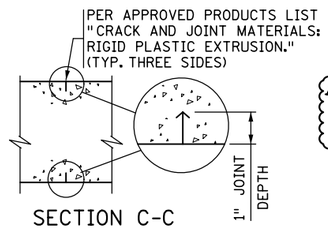

SECTION C-C

SLIPFORM CONSTRUCTION

CONTROL JOINT DETAILS

FOR SLIPFORM CONSTRUCTION: IMMEDIATELY AFTER CONCRETE IS PLACED AND WHILE IT IS STILL WET, CREATE A ONE INCH STRAIGHT GROOVE USING A TROWEL. INSERT RIGID PLASTIC EXTRUSION INTO GROOVE TO A DEPTH 1/8" BELOW THE SURFACE; FINISH OVER GROOVE COMPLETELY HIDING THE EXTRUSION.

INCREASE R501E VERTICAL LEGS IF DECK SLAB THICKNESS IS GREATER THAN 9".

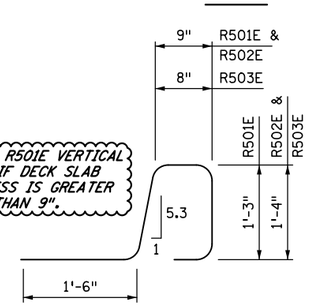

R501E, R502E & R503E

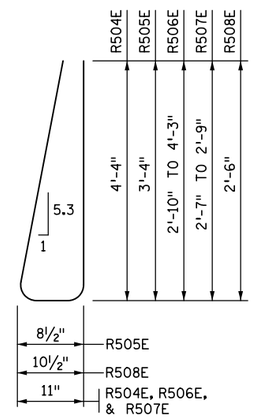

R504E, R505E, R506E, R507E & R508E

GENERAL NOTES

MEASURE PAYMENT LENGTH BETWEEN THE OUTSIDE ENDS OF THE BARRIER.

CONCRETE BARRIER = 643 LBS./FT. (0.159 CU. YDS./FT.)

FINISH ALL EDGES OF BARRIER WITH 1/2" CHAMFER, EXCEPT WHERE OTHERWISE NOTED.

SPACE CONTROL JOINTS AT 10 FT. MAXIMUM. REFER TO SUPERSTRUCTURE SHEET FOR SPECIFIC SPACING INFORMATION.

GUARDRAIL CONNECTION TO BE STRUCTURAL STEEL, SPEC. 3306.

GUARDRAIL CONNECTION AND NAME PLATE TO BE CONSIDERED INCIDENTAL TO BARRIER.

BARRIER QUANTITIES ARE LISTED IN SUMMARY OF QUANTITIES FOR SUPERSTRUCTURE.

1. PLACE BAR ON TOP OF BOTTOM REINFORCEMENT MAT IN DECK.
2. JOINT SEALANT PER MnDOT APPROVED/QUALIFIED PRODUCTS LIST - CRACK AND JOINT MATERIALS - SILICONE JOINT SEALERS.
3. DIMENSIONS TO BE DETERMINED BASED ON THE BRIDGE DECK SLOPE.
4. REMOVE CONCRETE FROM PIPE ENDS AFTER SLIPFORMING OR FORM REMOVAL.
5. REFER TO "WATERPROOF EXPANSION DEVICE" STANDARD PLANS FOR COVER PLATE DETAILS.

REVISION: MAY 10, 2017

APPROVED: AUGUST 24, 2016
Kevin Western
STATE BRIDGE ENGINEER

CERTIFIED BY _____ LICENSED PROFESSIONAL ENGINEER _____ DATE
NAME: LIC. NO.

TITLE: CONCRETE BARRIER 54" (TYPE S, TL-4)
PARAPET ABUTMENT WITH BRIDGE SLAB SIDEWALK AND GUARDRAIL CONNECTION (WITH 2" CONCRETE WEARING COURSE)

DES: DR: CHK: CHK:
SHEET NO. OF SHEETS

FIG. 5-397.143(D)
APPROVED:
BRIDGE NO.

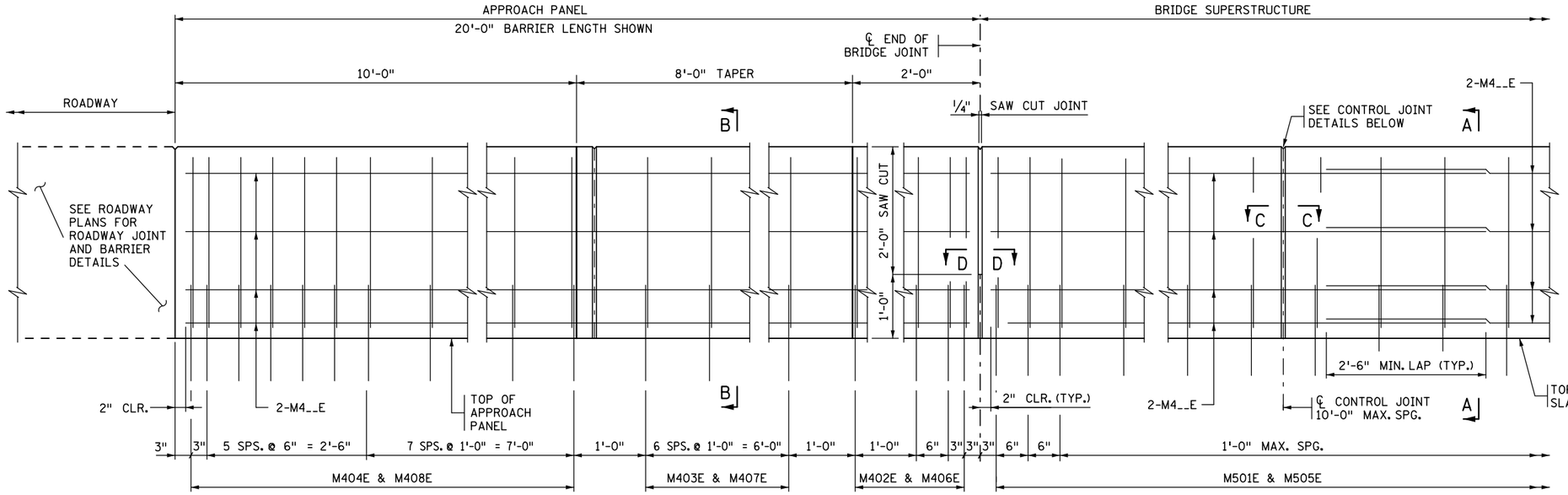

JOINT AT ABUTMENT

(INTEGRAL OR SEMI-INTEGRAL ABUTMENT)

CONTROL JOINT

INSIDE ELEVATION OF BARRIER

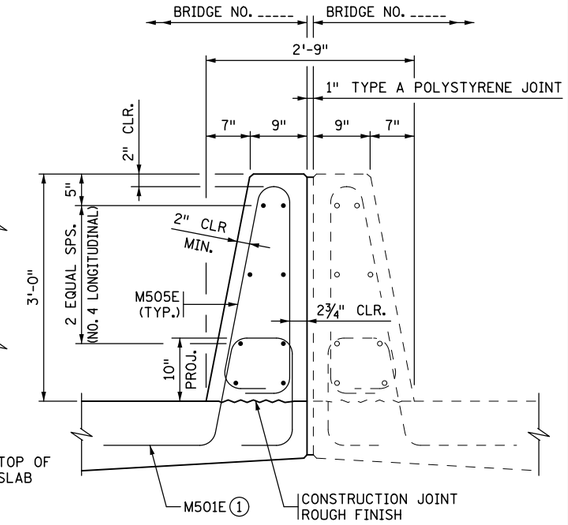

SECTION A-A

DESIGNER NOTE
(REMOVE PRIOR TO PLOTTING FINAL PLAN):
VERIFY LENGTH OF BARRIER ON APPROACH PANEL WITH ROADWAY DESIGNER. REFER TO MEMO TO DESIGNERS (2016-01) FOR ADDITIONAL REQUIREMENTS REGARDING BARRIER PLACEMENT.

DESIGNER NOTE
(REMOVE PRIOR TO PLOTTING FINAL PLAN):
AVOID LAYOUTS WITH HORIZONTAL GAP BETWEEN SPLIT MEDIAN BARRIERS OF 2" TO 6", AS BARRIERS CANNOT BE SLIPFORMED. IF GAP EXCEEDS 6" CONSIDER USING STANDARD FIGURE 5-.397-138 OR .139 IN LIEU OF THIS STANDARD.

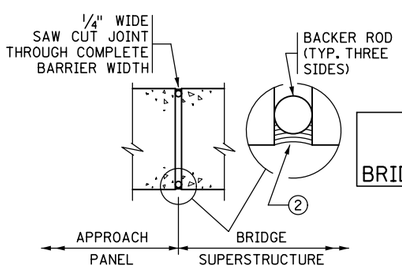

SECTION D-D

BARRIER ON EACH SIDE MEETS NCHRP 350 TL-4 REQUIREMENTS ON BRIDGE DECK AND TL-3 ON APPROACH PANEL.

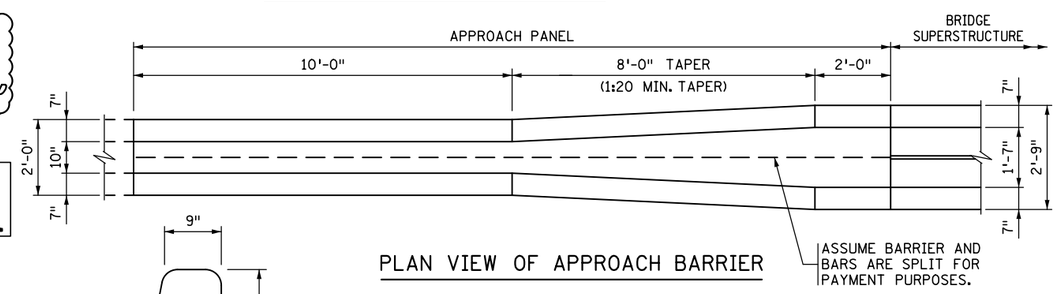

PLAN VIEW OF APPROACH BARRIER

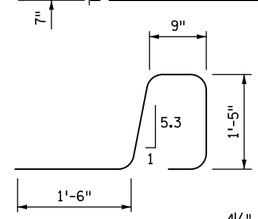

M501E

INCREASE M501E VERTICAL LEGS IF DECK SLAB THICKNESS IS GREATER THAN 9".

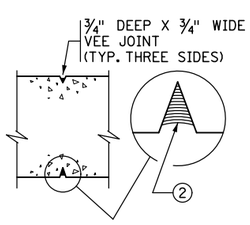

SECTION C-C

CAST-IN-PLACE CONSTRUCTION

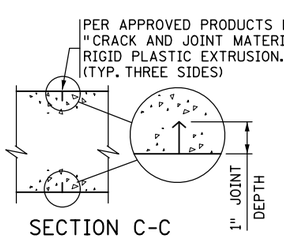

SECTION C-C

SLIPFORM CONSTRUCTION

CONTROL JOINT DETAILS

FOR SLIPFORM CONSTRUCTION: IMMEDIATELY AFTER CONCRETE IS PLACED AND WHILE IT IS STILL WET, CREATE A ONE INCH STRAIGHT GROOVE USING A TROWEL. INSERT RIGID PLASTIC EXTRUSION INTO GROOVE TO A DEPTH 1/8" BELOW THE SURFACE; FINISH OVER GROOVE COMPLETELY HIDING THE EXTRUSION.

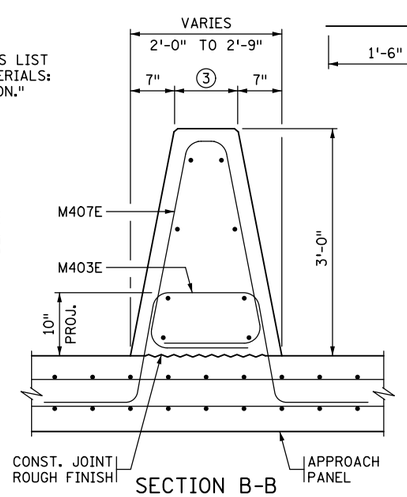

SECTION B-B

CONCRETE APPROACH ROADWAY

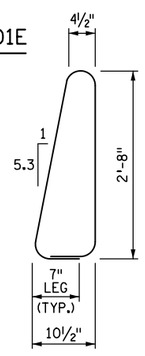

M505E

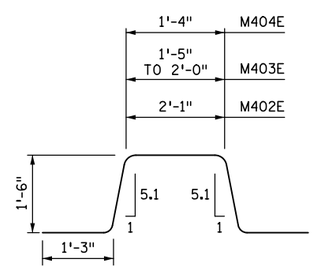

M402E, M403E, M404E

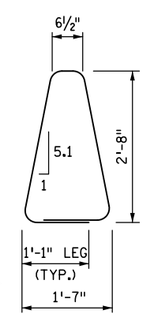

M408E

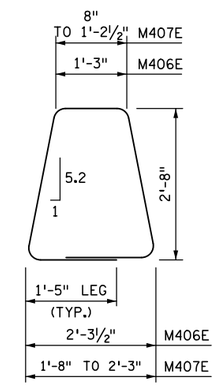

M406E, M407E

BILL OF REINFORCEMENT FOR BARRIER

BAR	NO.	LENGTH	SHAPE	LOCATION
M501E		5'-7"		BARRIER DOWEL
M402E		7'-7"		BARRIER DOWEL
M403E	SER. OF 7	6'-11" TO 7'-6"		BARRIER DOWEL
M404E		6'-10"		BARRIER DOWEL
M505E		6'-11"		BARRIER VERTICAL
M406E		9'-5"		BARRIER VERTICAL
M407E	SER. OF 7	8'-10" TO 9'-5"		BARRIER VERTICAL
M408E		8'-0"		BARRIER VERTICAL
M4__E				BARRIER LONGIT.
M4__E				BARRIER LONGIT.
M4__E				BARRIER LONGIT.
M4__E				BARRIER LONGIT.
M4__E				BARRIER LONGIT.

GENERAL NOTES

MEASURE PAYMENT LENGTH BETWEEN THE OUTSIDE ENDS OF THE BARRIER FROM THE E8 JOINT. MEASURED LENGTH IS FOR ONE SIDE OF THE SPLIT MEDIAN BARRIER.

CONCRETE BARRIER = 469 LBS./FT. (0.116 CU. YDS./FT.) PER SIDE.

FINISH ALL EDGES OF BARRIER WITH 1/2" CHAMFER, EXCEPT WHERE OTHERWISE NOTED.

SPACE CONTROL JOINTS AT 10 FT. MAXIMUM. REFER TO SUPERSTRUCTURE SHEET FOR SPECIFIC SPACING INFORMATION.

BARRIER QUANTITIES ARE LISTED IN SUMMARY OF QUANTITIES FOR SUPERSTRUCTURE.

① PLACE BAR ON TOP OF BOTTOM REINFORCEMENT MAT IN DECK.

② JOINT SEALANT PER MnDOT APPROVED/QUALIFIED PRODUCTS LIST - CRACK AND JOINT MATERIALS - SILICONE JOINT SEALERS.

③ VARIES FROM 10" TO 1'-7".

REVISION: MAY 10, 2017

APPROVED: AUGUST 24, 2016

Kevin Western

STATE BRIDGE ENGINEER

CERTIFIED BY _____ LICENSED PROFESSIONAL ENGINEER _____ DATE

NAME: LIC. NO.

TITLE: SPLIT MEDIAN BARRIER 36" (TYPE S, TL-4)
INTEGRAL OR SEMI-INTEGRAL ABUTMENT
(WITHOUT CONCRETE WEARING COURSE)

DES: DR: CHK: CHK:

SHEET NO. OF SHEETS

APPROVED:

FIG. 5-397.144(A)

BRIDGE NO.

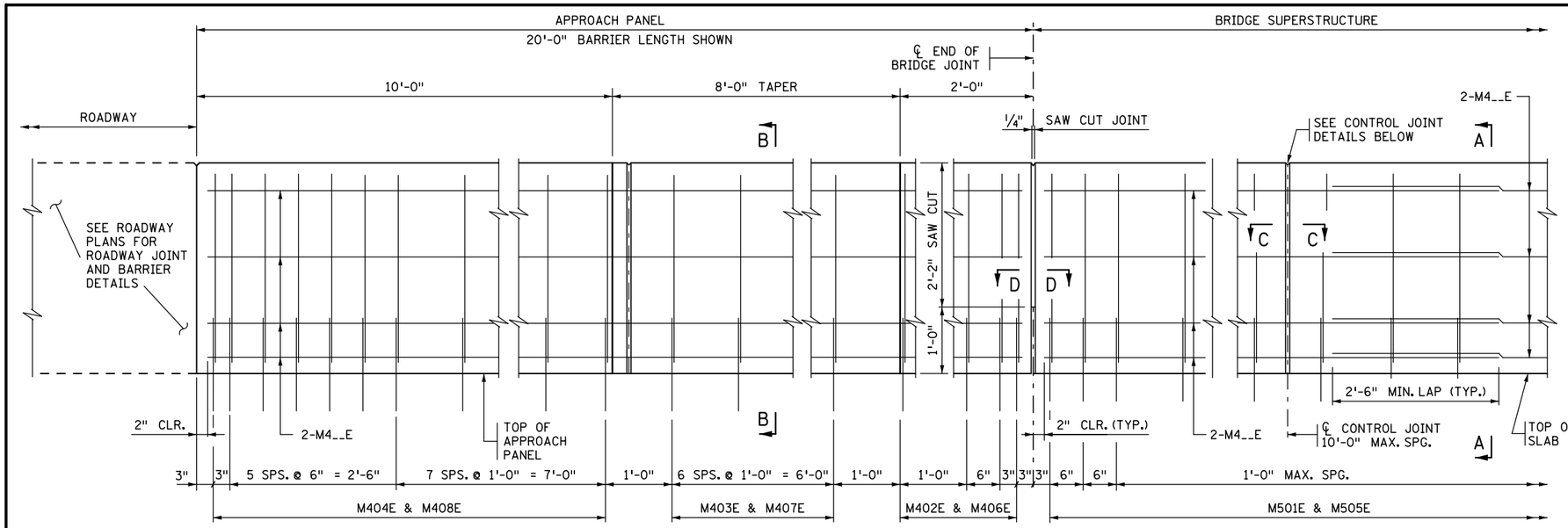

JOINT AT ABUTMENT

(INTEGRAL OR SEMI-INTEGRAL ABUTMENT)

CONTROL JOINT

INSIDE ELEVATION OF BARRIER

CONCRETE WEARING COURSE NOT SHOWN

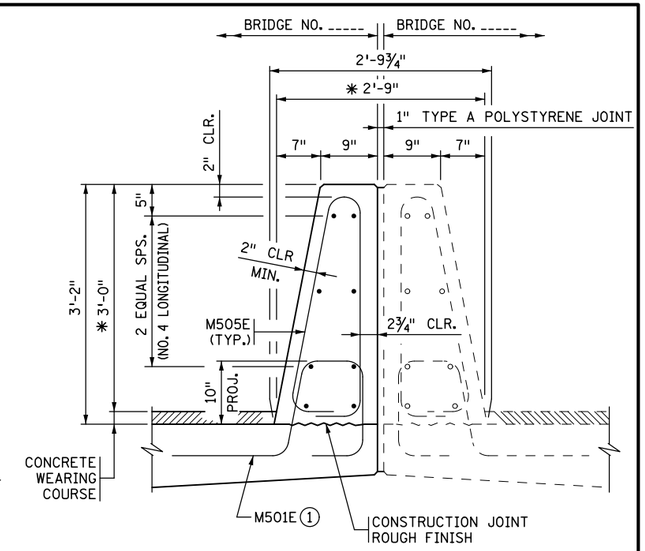

SECTION A-A

* DIMENSION SHOWN IS TO THE TOP OF THE WEARING COURSE AT GUTTERLINE.

DESIGNER NOTE
(REMOVE PRIOR TO PLOTTING FINAL PLAN):
VERIFY LENGTH OF BARRIER ON APPROACH PANEL WITH ROADWAY DESIGNER. REFER TO MEMO TO DESIGNERS (2016-01) FOR ADDITIONAL REQUIREMENTS REGARDING BARRIER PLACEMENT.

DESIGNER NOTE
(REMOVE PRIOR TO PLOTTING FINAL PLAN):
AVOID LAYOUTS WITH HORIZONTAL GAP BETWEEN SPLIT MEDIAN BARRIERS OF 2" TO 6", AS BARRIERS CANNOT BE SLIPFORMED. IF GAP EXCEEDS 6" CONSIDER USING STANDARD FIGURE 5-397.138 OR .139 IN LIEU OF THIS STANDARD.

BARRIER ON EACH SIDE MEETS NCHRP 350 TL-4 REQUIREMENTS ON BRIDGE DECK AND TL-3 ON APPROACH PANEL.

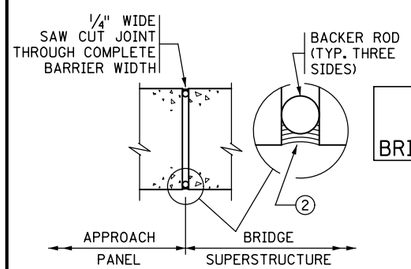

SECTION D-D

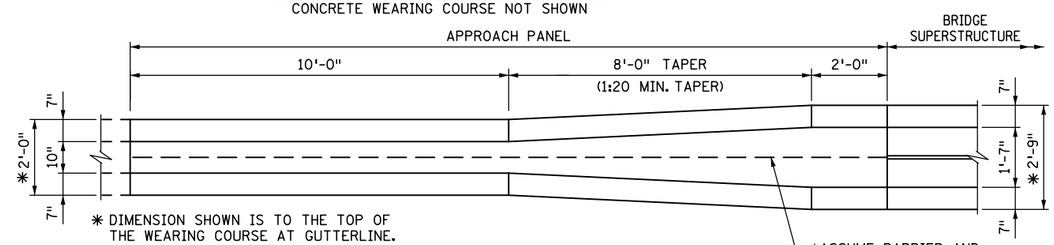

* DIMENSION SHOWN IS TO THE TOP OF THE WEARING COURSE AT GUTTERLINE.

PLAN VIEW OF APPROACH BARRIER

BILL OF REINFORCEMENT FOR BARRIER				
BAR	NO.	LENGTH	SHAPE	LOCATION
M501E		5'-4"		BARRIER DOWEL
M402E	4	7'-4"		BARRIER DOWEL
M403E	SER. OF 7	6'-7" TO 7'-2"		BARRIER DOWEL
M404E		6'-7"		BARRIER DOWEL
M505E		7'-3"		BARRIER VERTICAL
M406E		9'-9"		BARRIER VERTICAL
M407E	SER. OF 7	9'-2" TO 9'-9"		BARRIER VERTICAL
M408E		8'-5"		BARRIER VERTICAL
M4__E				BARRIER LONGIT.
M4__E				BARRIER LONGIT.
M4__E				BARRIER LONGIT.
M4__E				BARRIER LONGIT.
M4__E				BARRIER LONGIT.

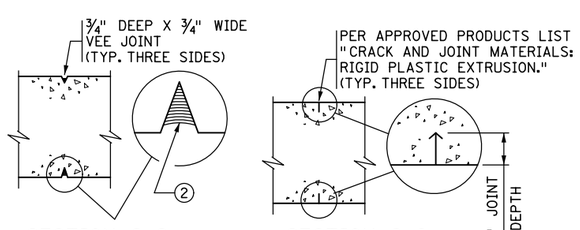

SECTION C-C

CAST-IN-PLACE CONSTRUCTION

SECTION C-C

SLIPFORM CONSTRUCTION

CONTROL JOINT DETAILS

FOR SLIPFORM CONSTRUCTION: IMMEDIATELY AFTER CONCRETE IS PLACED AND WHILE IT IS STILL WET, CREATE A ONE INCH STRAIGHT GROOVE USING A TROWEL. INSERT RIGID PLASTIC EXTRUSION INTO GROOVE TO A DEPTH 1/8" BELOW THE SURFACE; FINISH OVER GROOVE COMPLETELY HIDING THE EXTRUSION.

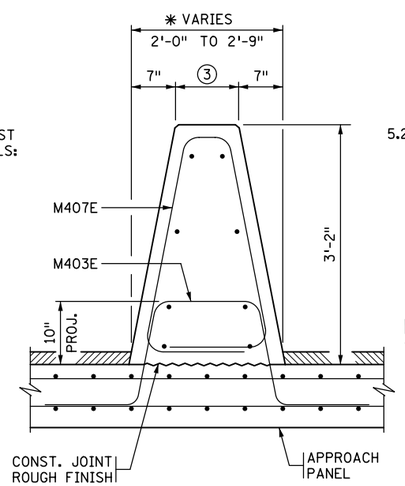

SECTION B-B

CONCRETE APPROACH ROADWAY.
* DIMENSION SHOWN IS TO THE TOP OF THE WEARING COURSE AT GUTTERLINE.

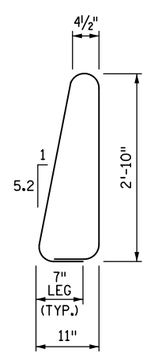

M505E

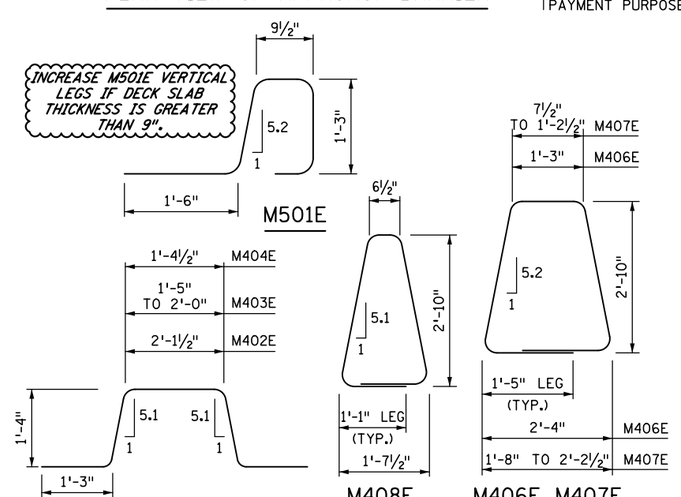

GENERAL NOTES

MEASURE PAYMENT LENGTH BETWEEN THE OUTSIDE ENDS OF THE BARRIER FROM THE E8 JOINT. MEASURED LENGTH IS FOR ONE SIDE OF THE SPLIT MEDIAN BARRIER.

CONCRETE BARRIER = 503 LBS./FT. (0.124 CU. YDS./FT.) PER SIDE.

FINISH ALL EDGES OF BARRIER WITH 1/2" CHAMFER, EXCEPT WHERE OTHERWISE NOTED.

SPACE CONTROL JOINTS AT 10 FT. MAXIMUM. REFER TO SUPERSTRUCTURE SHEET FOR SPECIFIC SPACING INFORMATION..

BARRIER QUANTITIES ARE LISTED IN SUMMARY OF QUANTITIES FOR SUPERSTRUCTURE.

1. PLACE BAR ON TOP OF BOTTOM REINFORCEMENT MAT IN DECK.
2. JOINT SEALANT PER MnDOT APPROVED/QUALIFIED PRODUCTS LIST - CRACK AND JOINT MATERIALS - SILICONE JOINT SEALERS.
3. VARIES FROM 10" TO 1'-7".

REVISION: MAY 10, 2017

APPROVED: AUGUST 24, 2016

Kevin Western

STATE BRIDGE ENGINEER

CERTIFIED BY _____ LICENSED PROFESSIONAL ENGINEER DATE

NAME: LIC. NO.

TITLE: SPLIT MEDIAN BARRIER 36" (TYPE S, TL-4)
INTEGRAL OR SEMI-INTEGRAL ABUTMENT
(WITH 2" CONCRETE WEARING COURSE)

DES: DR: CHK: CHK:

SHEET NO. OF SHEETS

APPROVED:

FIG. 5-397.144(B)

BRIDGE NO.

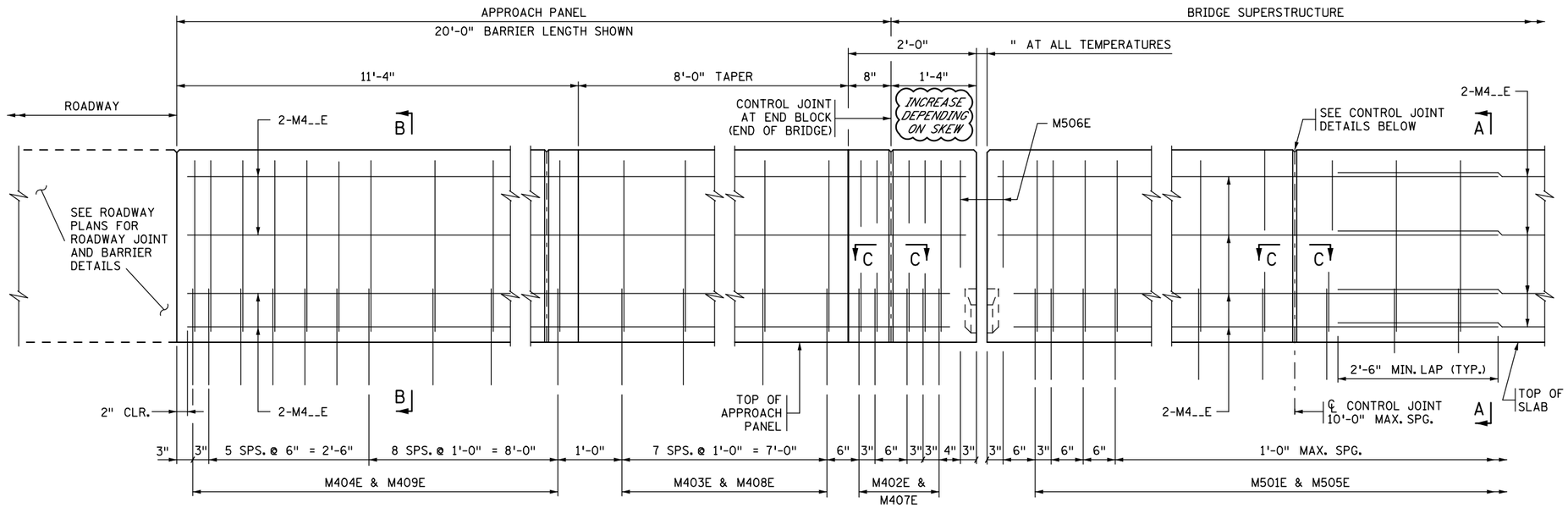

EXPANSION JOINT ④

EXPANSION DEVICE NOT SHOWN

CONTROL JOINT

INSIDE ELEVATION OF BARRIER

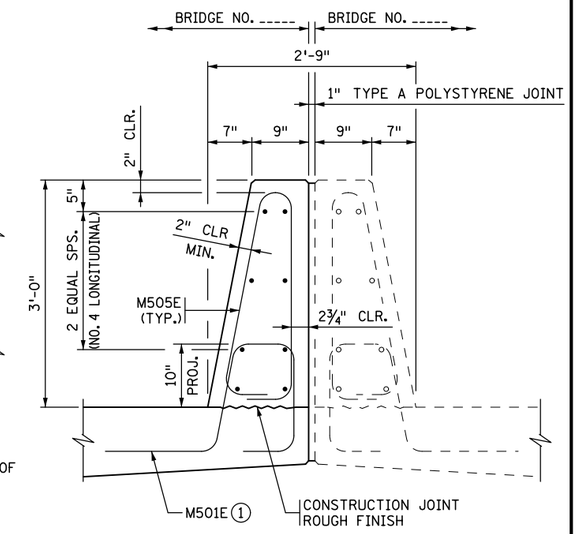

SECTION A-A

DESIGNER NOTE
(REMOVE PRIOR TO PLOTTING FINAL PLAN):
VERIFY LENGTH OF BARRIER ON APPROACH PANEL WITH ROADWAY DESIGNER. REFER TO MEMO TO DESIGNERS (2016-01) FOR ADDITIONAL REQUIREMENTS REGARDING BARRIER PLACEMENT.

DESIGNER NOTE
(REMOVE PRIOR TO PLOTTING FINAL PLAN):
AVOID LAYOUTS WITH HORIZONTAL GAP BETWEEN SPLIT MEDIAN BARRIERS OF 2" TO 6", AS BARRIERS CANNOT BE SLIPFORMED. IF GAP EXCEEDS 6" CONSIDER USING STANDARD FIGURE 5-.397-138 OR .139 IN LIEU OF THIS STANDARD.

BARRIER ON EACH SIDE MEETS NCHRP 350 TL-4 REQUIREMENTS ON BRIDGE DECK AND TL-3 ON APPROACH PANEL.

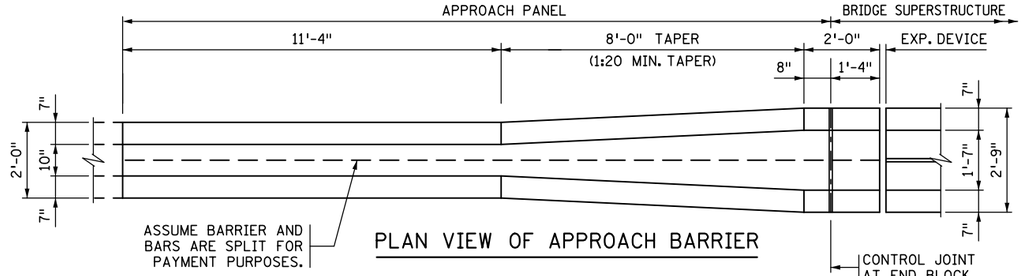

PLAN VIEW OF APPROACH BARRIER

INCREASE M501E VERTICAL LEGS IF DECK SLAB THICKNESS IS GREATER THAN 9".

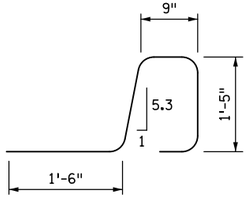

M501E

BILL OF REINFORCEMENT FOR BARRIER

BAR	NO.	LENGTH	SHAPE	LOCATION
M501E		5'-7"		BARRIER DOWEL
M402E		7'-7"		BARRIER DOWEL
M403E	SER. OF 8	6'-11" TO 7'-6"		BARRIER DOWEL
M404E		6'-10"		BARRIER DOWEL
M505E		6'-11"		BARRIER VERTICAL
M506E		4'-11"		BARRIER VERTICAL
M407E		9'-6"		BARRIER VERTICAL
M408E	SER. OF 8	8'-10" TO 9'-5"		BARRIER VERTICAL
M409E		8'-0"		BARRIER VERTICAL
M4__E				BARRIER LONGIT.
M4__E				BARRIER LONGIT.
M4__E				BARRIER LONGIT.
M4__E				BARRIER LONGIT.
M4__E				BARRIER LONGIT.

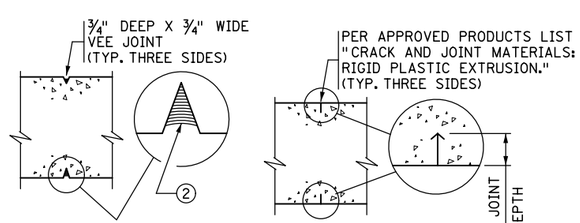

SECTION C-C
CAST-IN-PLACE CONSTRUCTION

SECTION C-C
SLIPFORM CONSTRUCTION

CONTROL JOINT DETAILS

FOR SLIPFORM CONSTRUCTION: IMMEDIATELY AFTER CONCRETE IS PLACED AND WHILE IT IS STILL WET, CREATE A ONE INCH STRAIGHT GROOVE USING A TROWEL. INSERT RIGID PLASTIC EXTRUSION INTO GROOVE TO A DEPTH ⅛" BELOW THE SURFACE; FINISH OVER GROOVE COMPLETELY HIDING THE EXTRUSION.

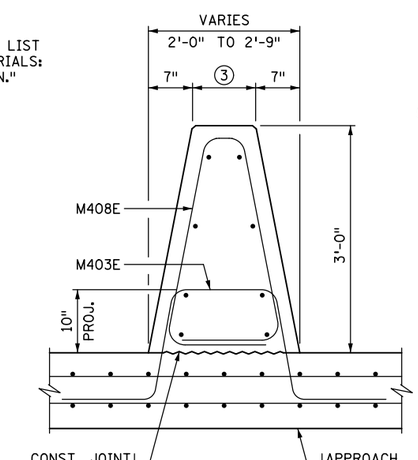

SECTION B-B
CONCRETE APPROACH ROADWAY

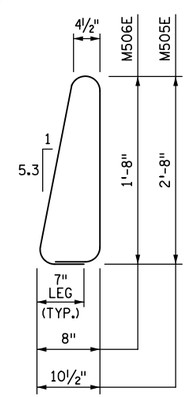

M505E, M506E

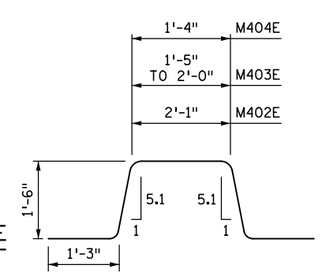

M402E, M403E, M404E

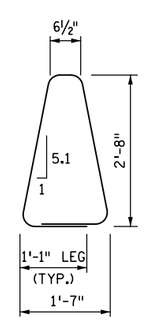

M409E

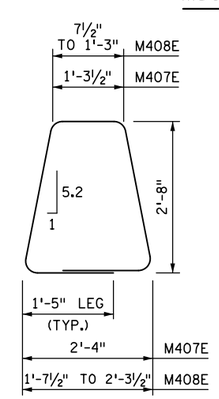

M407E, M408E

GENERAL NOTES

MEASURE PAYMENT LENGTH BETWEEN THE OUTSIDE ENDS OF THE BARRIER FROM THE E8 JOINT. MEASURED LENGTH IS FOR ONE SIDE OF THE SPLIT MEDIAN BARRIER.

CONCRETE BARRIER = 469 LBS./FT. (0.116 CU. YDS./FT.) PER SIDE.

FINISH ALL EDGES OF BARRIER WITH ½" CHAMFER, EXCEPT WHERE OTHERWISE NOTED.

SPACE CONTROL JOINTS AT 10 FT. MAXIMUM. REFER TO SUPERSTRUCTURE SHEET FOR SPECIFIC SPACING INFORMATION.

BARRIER QUANTITIES ARE LISTED IN SUMMARY OF QUANTITIES FOR SUPERSTRUCTURE.

① PLACE BAR ON TOP OF BOTTOM REINFORCEMENT MAT IN DECK.

② JOINT SEALANT PER MnDOT APPROVED/QUALIFIED PRODUCTS LIST - CRACK AND JOINT MATERIALS - SILICONE JOINT SEALERS.

③ VARIES FROM 10" TO 1'-7".

④ REFER TO "WATERPROOF EXPANSION DEVICE" STANDARD PLANS FOR COVER PLATE DETAILS.

REVISION: MAY 10, 2017

APPROVED: AUGUST 24, 2016

Kevin Western
STATE BRIDGE ENGINEER

CERTIFIED BY _____ LICENSED PROFESSIONAL ENGINEER _____ DATE

NAME: LIC. NO.

TITLE: SPLIT MEDIAN BARRIER 36" (TYPE S, TL-4)
PARAPET ABUTMENT
(WITHOUT CONCRETE WEARING COURSE)

DES: DR: CHK: CHK:

SHEET NO. OF SHEETS

APPROVED:

FIG. 5-397.144(C)

BRIDGE NO.

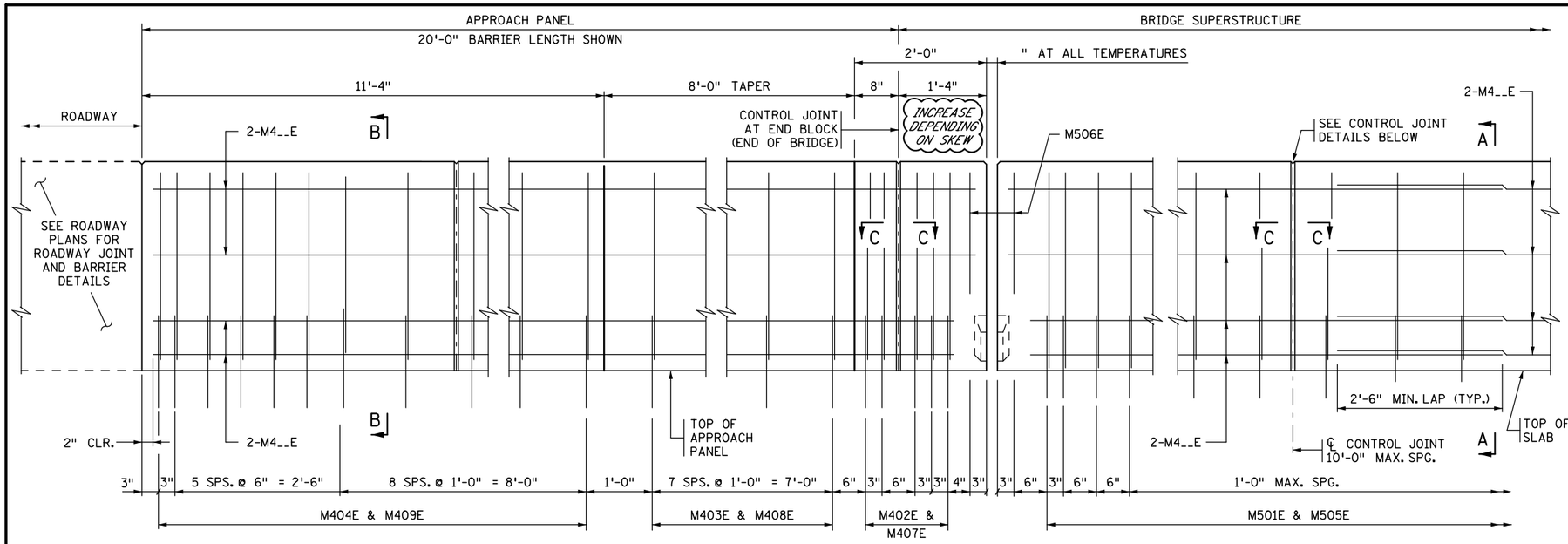

EXPANSION JOINT ④ CONTROL JOINT

EXPANSION DEVICE NOT SHOWN

INSIDE ELEVATION OF BARRIER

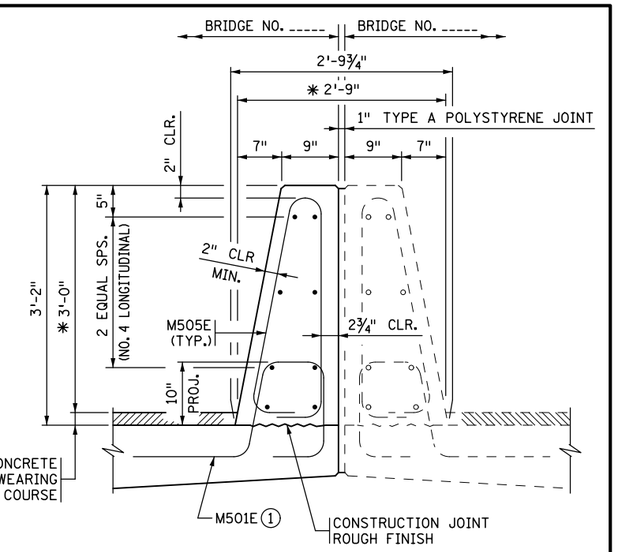

SECTION A-A

✱ DIMENSION SHOWN IS TO THE TOP OF THE WEARING COURSE AT GUTTERLINE.

DESIGNER NOTE
(REMOVE PRIOR TO PLOTTING FINAL PLAN):
VERIFY LENGTH OF BARRIER ON APPROACH PANEL WITH ROADWAY DESIGNER. REFER TO MEMO TO DESIGNERS (2016-01) FOR ADDITIONAL REQUIREMENTS REGARDING BARRIER PLACEMENT.

DESIGNER NOTE
(REMOVE PRIOR TO PLOTTING FINAL PLAN):
AVOID LAYOUTS WITH HORIZONTAL GAP BETWEEN SPLIT MEDIAN BARRIERS OF 2" TO 6", AS BARRIERS CANNOT BE SLIPFORMED. IF GAP EXCEEDS 6" CONSIDER USING STANDARD FIGURE 5-397-138 OR .139 IN LIEU OF THIS STANDARD.

BARRIER ON EACH SIDE MEETS NCHRP 350 TL-4 REQUIREMENTS ON BRIDGE DECK AND TL-3 ON APPROACH PANEL.

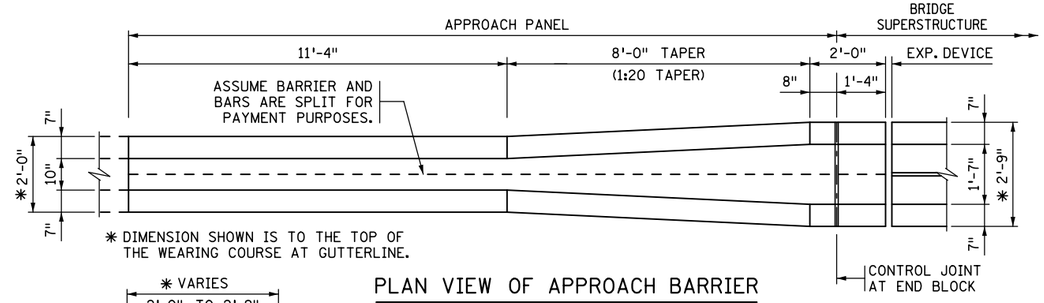

✱ DIMENSION SHOWN IS TO THE TOP OF THE WEARING COURSE AT GUTTERLINE.

PLAN VIEW OF APPROACH BARRIER

INCREASE M501E VERTICAL LEGS IF DECK SLAB THICKNESS IS GREATER THAN 9".

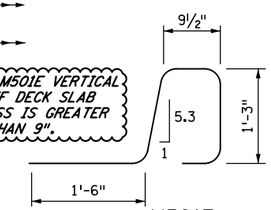

M501E

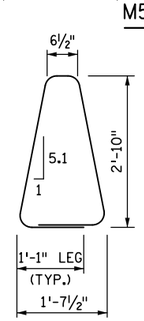

M409E

BILL OF REINFORCEMENT FOR BARRIER				
BAR	NO.	LENGTH	SHAPE	LOCATION
M501E		5'-4"		BARRIER DOWEL
M402E		7'-4"		BARRIER DOWEL
M403E	SER. OF 8	6'-7" TO 7'-3"		BARRIER DOWEL
M404E		6'-7"		BARRIER DOWEL
M505E		7'-3"		BARRIER VERTICAL
M506E		5'-3"		BARRIER VERTICAL
M407E		9'-9"		BARRIER VERTICAL
M408E	SER. OF 8	9'-1" TO 9'-9"		BARRIER VERTICAL
M409E		8'-5"		BARRIER VERTICAL
M4__E				BARRIER LONGIT.
M4__E				BARRIER LONGIT.
M4__E				BARRIER LONGIT.
M4__E				BARRIER LONGIT.
M4__E				BARRIER LONGIT.

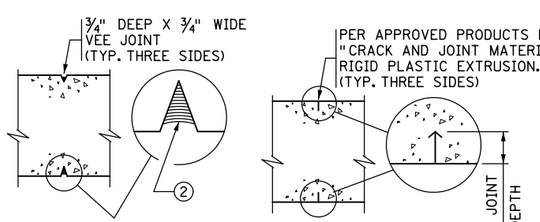

SECTION C-C — CAST-IN-PLACE CONSTRUCTION

SECTION C-C — SLIPFORM CONSTRUCTION

CONTROL JOINT DETAILS

FOR SLIPFORM CONSTRUCTION: IMMEDIATELY AFTER CONCRETE IS PLACED AND WHILE IT IS STILL WET, CREATE A ONE INCH STRAIGHT GROOVE USING A TROWEL. INSERT RIGID PLASTIC EXTRUSION INTO GROOVE TO A DEPTH ⅛" BELOW THE SURFACE; FINISH OVER GROOVE COMPLETELY HIDING THE EXTRUSION.

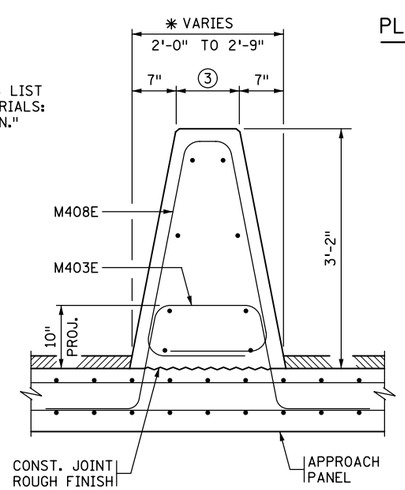

SECTION B-B

CONCRETE APPROACH ROADWAY.
✱ DIMENSION SHOWN IS TO THE TOP OF THE WEARING COURSE AT GUTTERLINE.

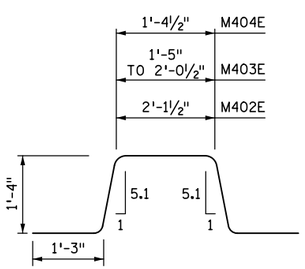

M402E, M403E, M404E

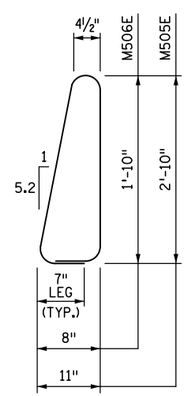

M505E, M506E

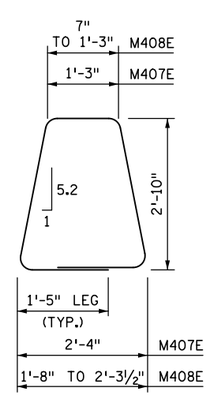

M407E, M408E

GENERAL NOTES

MEASURE PAYMENT LENGTH BETWEEN THE OUTSIDE ENDS OF THE BARRIER FROM THE E8 JOINT. MEASURED LENGTH IS FOR ONE SIDE OF THE SPLIT MEDIAN BARRIER.

CONCRETE BARRIER = 503 LBS./FT. (0.124 CU. YDS./FT.) PER SIDE.

FINISH ALL EDGES OF BARRIER WITH ½" CHAMFER, EXCEPT WHERE OTHERWISE NOTED.

SPACE CONTROL JOINTS AT 10 FT. MAXIMUM. REFER TO SUPERSTRUCTURE SHEET FOR SPECIFIC SPACING INFORMATION..

BARRIER QUANTITIES ARE LISTED IN SUMMARY OF QUANTITIES FOR SUPERSTRUCTURE.

① PLACE BAR ON TOP OF BOTTOM REINFORCEMENT MAT IN DECK.

② JOINT SEALANT PER MnDOT APPROVED/QUALIFIED PRODUCTS LIST - CRACK AND JOINT MATERIALS - SILICONE JOINT SEALERS.

③ VARIES FROM 10" TO 1'-7".

④ REFER TO "WATERPROOF EXPANSION DEVICE" STANDARD PLANS FOR COVER PLATE DETAILS.

REVISION: MAY 10, 2017

APPROVED: AUGUST 24, 2016

Kevin Western
STATE BRIDGE ENGINEER

CERTIFIED BY _____ LICENSED PROFESSIONAL ENGINEER _____ DATE

NAME: LIC. NO.

TITLE: SPLIT MEDIAN BARRIER 36" (TYPE S, TL-4)
PARAPET ABUTMENT
(WITH 2" CONCRETE WEARING COURSE)

DES: DR: CHK: CHK:

SHEET NO. OF SHEETS

FIG. 5-397.144(D)

APPROVED:

BRIDGE NO.

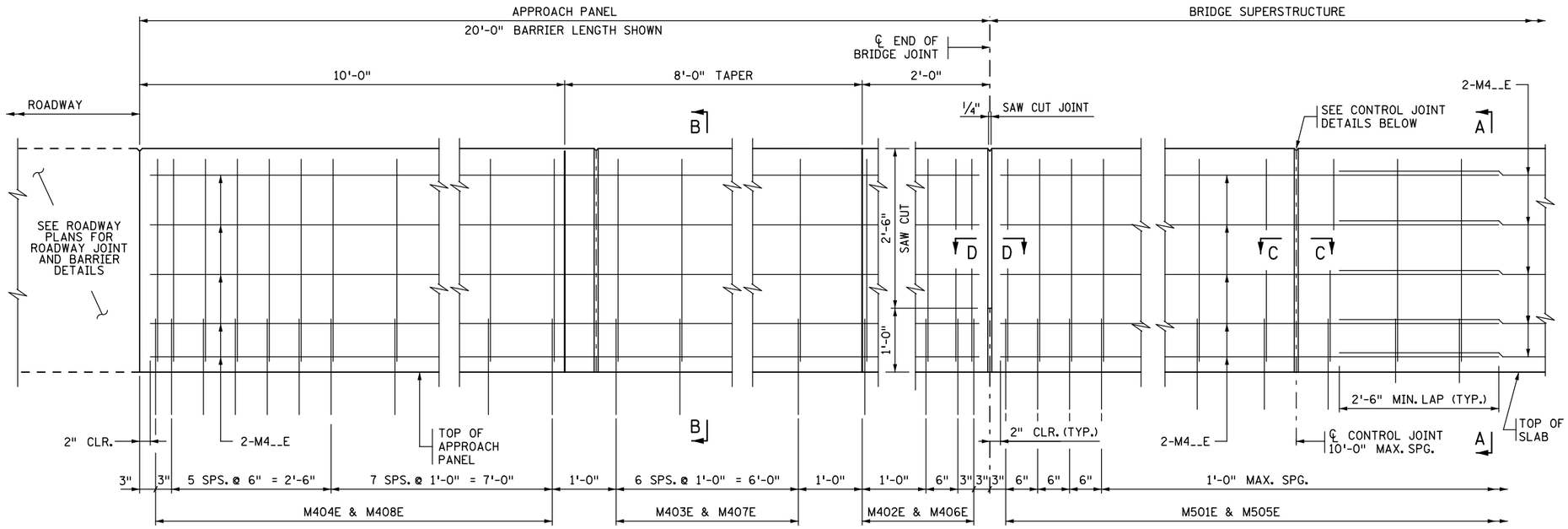

JOINT AT ABUTMENT

(INTEGRAL OR SEMI-INTEGRAL ABUTMENT)

CONTROL JOINT

INSIDE ELEVATION OF BARRIER

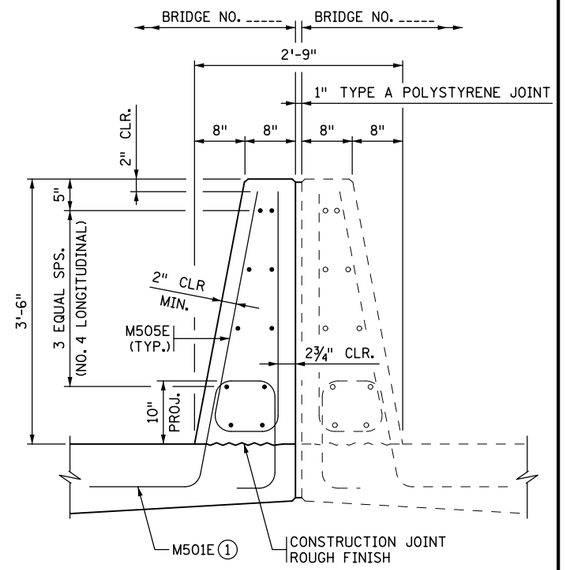

SECTION A-A

DESIGNER NOTE
(REMOVE PRIOR TO PLOTTING FINAL PLAN):
VERIFY LENGTH OF BARRIER ON APPROACH PANEL WITH ROADWAY DESIGNER. REFER TO MEMO TO DESIGNERS (2016-01) FOR ADDITIONAL REQUIREMENTS REGARDING BARRIER PLACEMENT.

BILL OF REINFORCEMENT FOR BARRIER				
BAR	NO.	LENGTH	SHAPE	LOCATION
M501E		5'-7"		BARRIER DOWEL
M402E		7'-7"		BARRIER DOWEL
M403E	SER. OF 7	6'-11" TO 7'-7"		BARRIER DOWEL
M404E		6'-11"		BARRIER DOWEL
M505E		7'-2"		BARRIER VERTICAL
M406E		10'-4"		BARRIER VERTICAL
M407E	SER. OF 7	9'-7" TO 10'-3"		BARRIER VERTICAL
M408E		8'-11"		BARRIER VERTICAL
M4__E				BARRIER LONGIT.
M4__E				BARRIER LONGIT.
M4__E				BARRIER LONGIT.
M4__E				BARRIER LONGIT.
M4__E				BARRIER LONGIT.

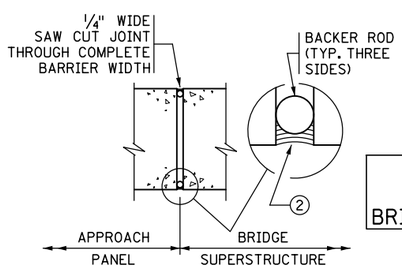

SECTION D-D

DESIGNER NOTE
(REMOVE PRIOR TO PLOTTING FINAL PLAN):
AVOID LAYOUTS WITH HORIZONTAL GAP BETWEEN SPLIT MEDIAN BARRIERS OF 2" TO 6", AS BARRIERS CANNOT BE SLIPFORMED. IF GAP EXCEEDS 6" CONSIDER USING STANDARD FIGURE 5-397.140 OR .141 IN LIEU OF THIS STANDARD.

BARRIER ON EACH SIDE MEETS NCHRP 350 TL-4 REQUIREMENTS ON BRIDGE DECK AND TL-3 ON APPROACH PANEL.

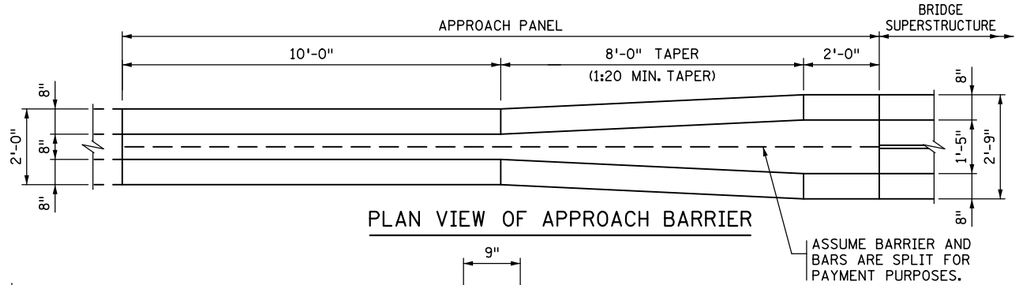

PLAN VIEW OF APPROACH BARRIER

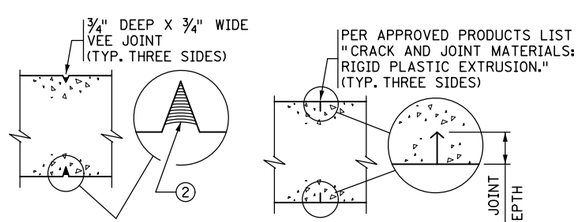

SECTION C-C
CAST-IN-PLACE CONSTRUCTION

SECTION C-C
SLIPFORM CONSTRUCTION

CONTROL JOINT DETAILS

FOR SLIPFORM CONSTRUCTION: IMMEDIATELY AFTER CONCRETE IS PLACED AND WHILE IT IS STILL WET, CREATE A ONE INCH STRAIGHT GROOVE USING A TROWEL. INSERT RIGID PLASTIC EXTRUSION INTO GROOVE TO A DEPTH 1/8" BELOW THE SURFACE; FINISH OVER GROOVE COMPLETELY HIDING THE EXTRUSION.

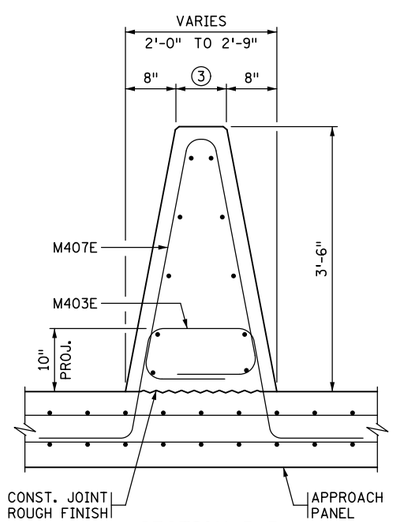

SECTION B-B
CONCRETE APPROACH ROADWAY

INCREASE M501E VERTICAL LEGS IF DECK SLAB THICKNESS IS GREATER THAN 9".

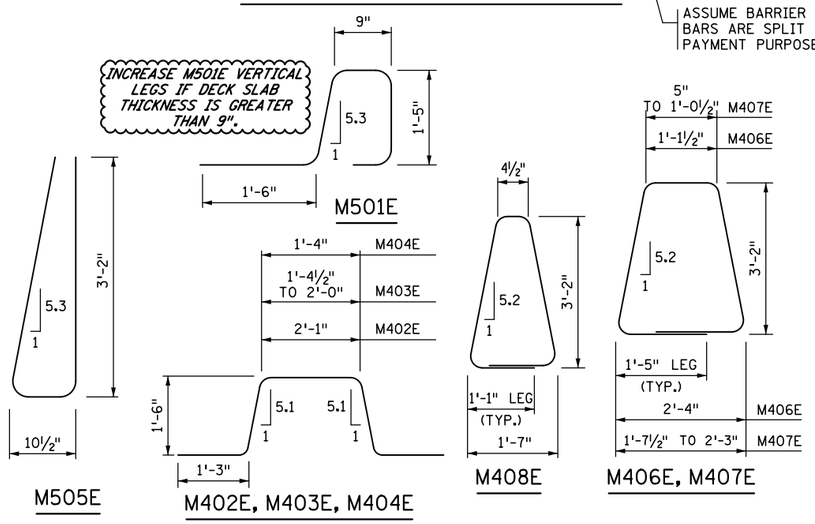

GENERAL NOTES

MEASURE PAYMENT LENGTH BETWEEN THE OUTSIDE ENDS OF THE BARRIER FROM THE E8 JOINT. MEASURED LENGTH IS FOR ONE SIDE OF THE SPLIT MEDIAN BARRIER.

CONCRETE BARRIER = 525 LBS./FT. (0.130 CU. YDS./FT.) PER SIDE.

FINISH ALL EDGES OF BARRIER WITH 1/2" CHAMFER, EXCEPT WHERE OTHERWISE NOTED.

SPACE CONTROL JOINTS AT 10 FT. MAXIMUM. REFER TO SUPERSTRUCTURE SHEET FOR SPECIFIC SPACING INFORMATION.

BARRIER QUANTITIES ARE LISTED IN SUMMARY OF QUANTITIES FOR SUPERSTRUCTURE.

① PLACE BAR ON TOP OF BOTTOM REINFORCEMENT MAT IN DECK.

② JOINT SEALANT PER MnDOT APPROVED/QUALIFIED PRODUCTS LIST - CRACK AND JOINT MATERIALS - SILICONE JOINT SEALERS.

③ VARIES FROM 8" TO 1'-5".

REVISION: MAY 10, 2017

APPROVED: AUGUST 24, 2016

Kevin Western
STATE BRIDGE ENGINEER

CERTIFIED BY _____ LICENSED PROFESSIONAL ENGINEER _____ DATE

NAME: LIC. NO.

TITLE: SPLIT MEDIAN BARRIER 42" (TYPE S, TL-4)
INTEGRAL OR SEMI-INTEGRAL ABUTMENT (WITHOUT CONCRETE WEARING COURSE)

DES: DR: CHK: CHK:

SHEET NO. OF SHEETS

APPROVED:

FIG. 5-397.145(A)

BRIDGE NO.

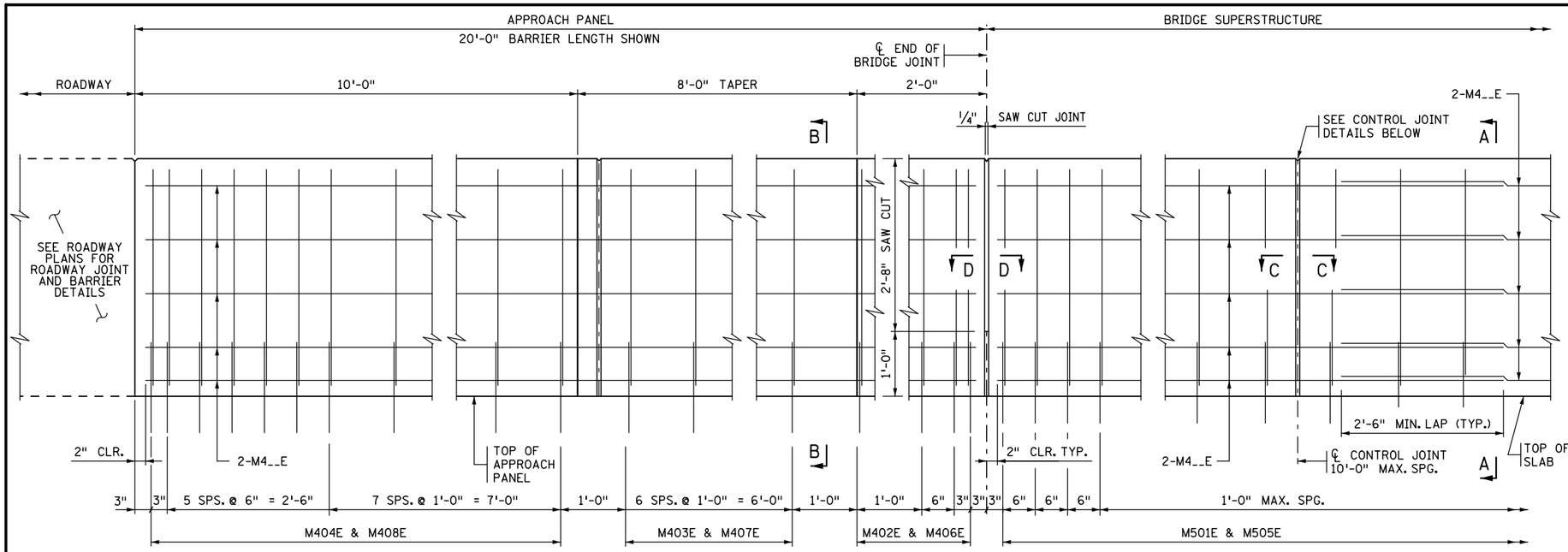

JOINT AT ABUTMENT

(INTEGRAL OR SEMI-INTEGRAL ABUTMENT)

CONTROL JOINT

INSIDE ELEVATION OF BARRIER

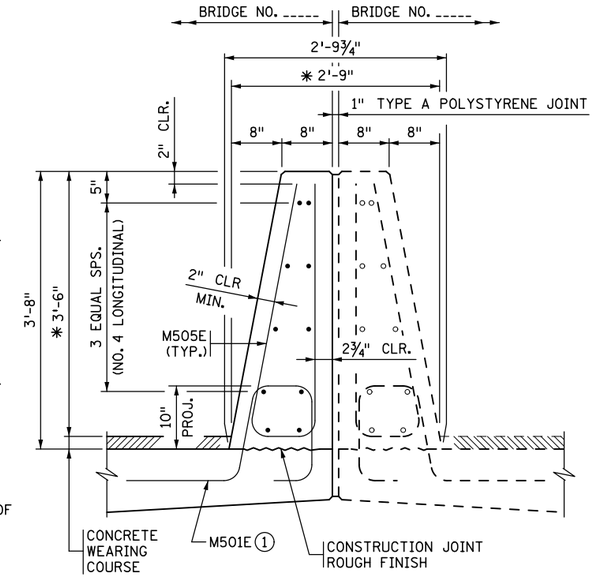

SECTION A-A

✱ DIMENSION SHOWN IS TO THE TOP OF THE WEARING COURSE AT GUTTERLINE.

DESIGNER NOTE
(REMOVE PRIOR TO PLOTTING FINAL PLAN):
VERIFY LENGTH OF BARRIER ON APPROACH PANEL WITH ROADWAY DESIGNER. REFER TO MEMO TO DESIGNERS (2016-01) FOR ADDITIONAL REQUIREMENTS REGARDING BARRIER PLACEMENT.

DESIGNER NOTE
(REMOVE PRIOR TO PLOTTING FINAL PLAN):
AVOID LAYOUTS WITH HORIZONTAL GAP BETWEEN SPLIT MEDIAN BARRIERS OF 2" TO 6". AS BARRIERS CANNOT BE SLIPFORMED. IF GAP EXCEEDS 6" CONSIDER USING STANDARD FIGURE 5-397.140 OR .141 IN LIEU OF THIS STANDARD.

BARRIER ON EACH SIDE MEETS NCHRP 350 TL-4 REQUIREMENTS ON BRIDGE DECK AND TL-3 ON APPROACH PANEL.

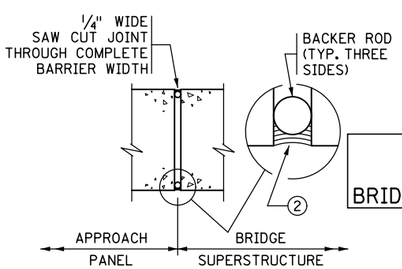

SECTION D-D

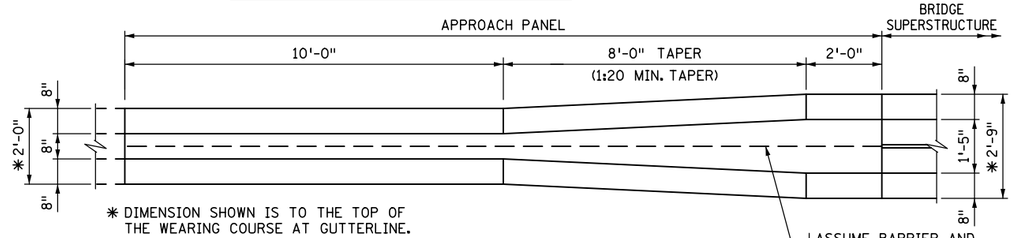

PLAN VIEW OF APPROACH BARRIER

BILL OF REINFORCEMENT FOR BARRIER				
BAR	NO.	LENGTH	SHAPE	LOCATION
M501E		5'-4"		BARRIER DOWEL
M402E		7'-4"		BARRIER DOWEL
M403E	SER. OF 7	6'-8" TO 7'-2"		BARRIER DOWEL
M404E		6'-7"		BARRIER DOWEL
M505E		7'-6"		BARRIER VERTICAL
M406E		10'-8"		BARRIER VERTICAL
M407E	SER. OF 7	10'-0" TO 10'-7"		BARRIER VERTICAL
M408E		8'-11"		BARRIER VERTICAL
M4__E				BARRIER LONGIT.
M4__E				BARRIER LONGIT.
M4__E				BARRIER LONGIT.
M4__E				BARRIER LONGIT.
M4__E				BARRIER LONGIT.

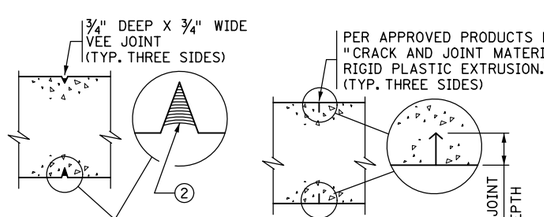

SECTION C-C
CAST-IN-PLACE CONSTRUCTION

SECTION C-C
SLIPFORM CONSTRUCTION

CONTROL JOINT DETAILS

FOR SLIPFORM CONSTRUCTION: IMMEDIATELY AFTER CONCRETE IS PLACED AND WHILE IT IS STILL WET, CREATE A ONE INCH STRAIGHT GROOVE USING A TROWEL. INSERT RIGID PLASTIC EXTRUSION INTO GROOVE TO A DEPTH ⅛" BELOW THE SURFACE; FINISH OVER GROOVE COMPLETELY HIDING THE EXTRUSION.

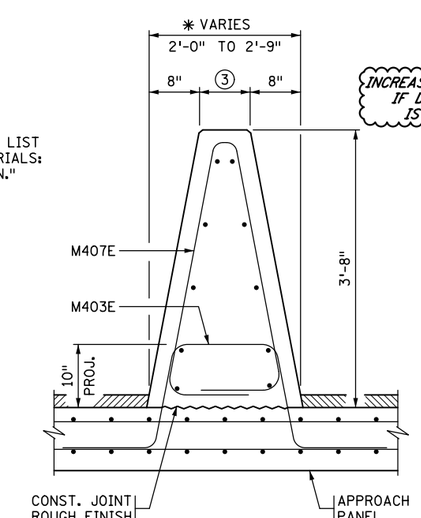

SECTION B-B

CONCRETE APPROACH ROADWAY.
✱ DIMENSION SHOWN IS TO THE TOP OF THE WEARING COURSE AT GUTTERLINE.

INCREASE M501E VERTICAL LEGS IF DECK SLAB THICKNESS IS GREATER THAN 9".

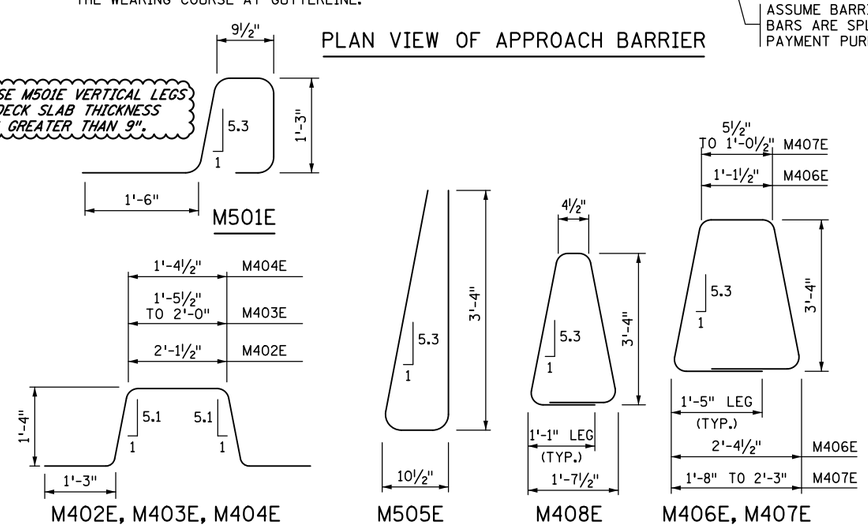

GENERAL NOTES

MEASURE PAYMENT LENGTH BETWEEN THE OUTSIDE ENDS OF THE BARRIER FROM THE E8 JOINT. MEASURED LENGTH IS FOR ONE SIDE OF THE SPLIT MEDIAN BARRIER.

CONCRETE BARRIER = 559 LBS./FT. (0.138 CU. YDS./FT.) PER SIDE.

FINISH ALL EDGES OF BARRIER WITH ½" CHAMFER, EXCEPT WHERE OTHERWISE NOTED.

SPACE CONTROL JOINTS AT 10 FT. MAXIMUM. REFER TO SUPERSTRUCTURE SHEET FOR SPECIFIC SPACING INFORMATION.

BARRIER QUANTITIES ARE LISTED IN SUMMARY OF QUANTITIES FOR SUPERSTRUCTURE.

① PLACE BAR ON TOP OF BOTTOM REINFORCEMENT MAT IN DECK.
② JOINT SEALANT PER MnDOT APPROVED/QUALIFIED PRODUCTS LIST - CRACK AND JOINT MATERIALS - SILICONE JOINT SEALERS.
③ VARIES FROM 8" TO 1'-5".

REVISION: MAY 10, 2017

APPROVED: AUGUST 24, 2016
Kevin Western
STATE BRIDGE ENGINEER

CERTIFIED BY _____ LICENSED PROFESSIONAL ENGINEER _____ DATE
NAME: LIC. NO.

TITLE: SPLIT MEDIAN BARRIER 42" (TYPE S, TL-4)
INTEGRAL OR SEMI-INTEGRAL ABUTMENT
(WITH 2" CONCRETE WEARING COURSE)

DES: DR: CHK: CHK:
SHEET NO. OF SHEETS

APPROVED:

FIG. 5-397.145(B)

BRIDGE NO.

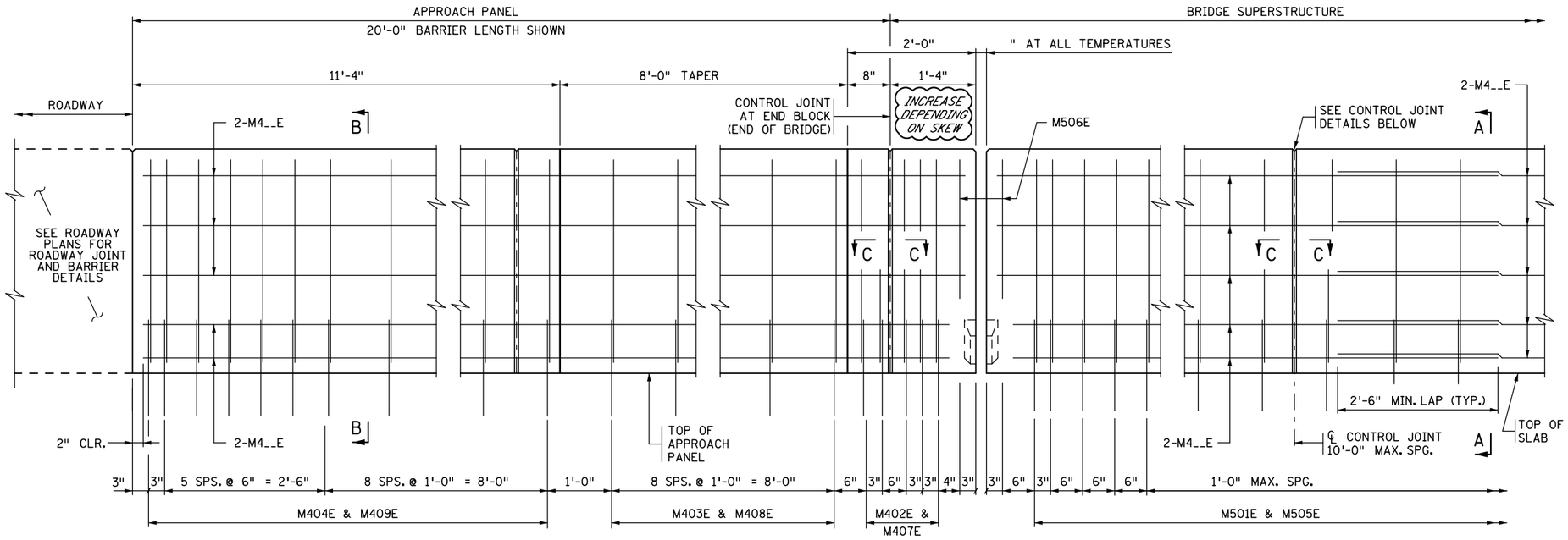

EXPANSION JOINT ④

EXPANSION DEVICE NOT SHOWN

CONTROL JOINT

INSIDE ELEVATION OF BARRIER

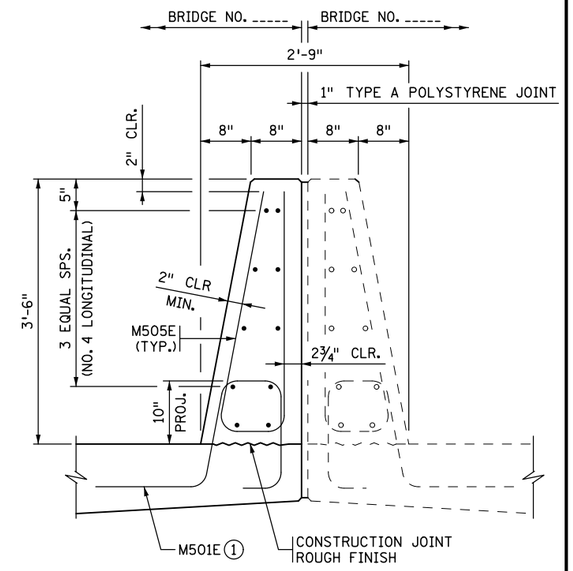

SECTION A-A

DESIGNER NOTE
(REMOVE PRIOR TO PLOTTING FINAL PLAN):
VERIFY LENGTH OF BARRIER ON APPROACH PANEL WITH ROADWAY DESIGNER. REFER TO MEMO TO DESIGNERS (2016-01) FOR ADDITIONAL REQUIREMENTS REGARDING BARRIER PLACEMENT.

DESIGNER NOTE
(REMOVE PRIOR TO PLOTTING FINAL PLAN):
AVOID LAYOUTS WITH HORIZONTAL GAP BETWEEN SPLIT MEDIAN BARRIERS OF 2" TO 6", AS BARRIERS CANNOT BE SLIPFORMED. IF GAP EXCEEDS 6" CONSIDER USING STANDARD FIGURE 5-.397-140 OR .141 IN LIEU OF THIS STANDARD.

BARRIER ON EACH SIDE MEETS NCHRP 350 TL-4 REQUIREMENTS ON BRIDGE DECK AND TL-3 ON APPROACH PANEL.

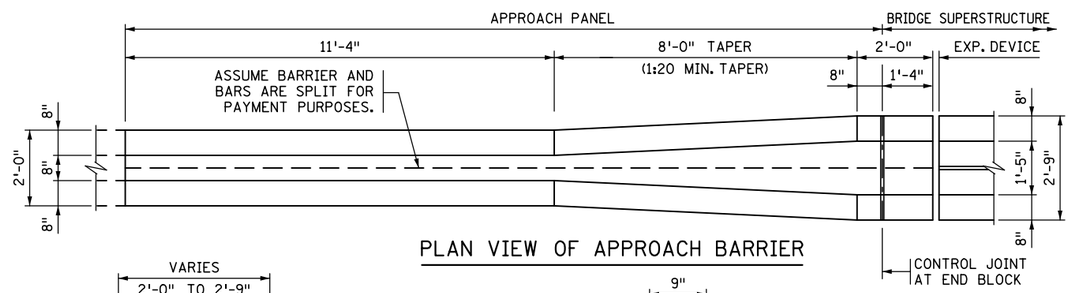

PLAN VIEW OF APPROACH BARRIER

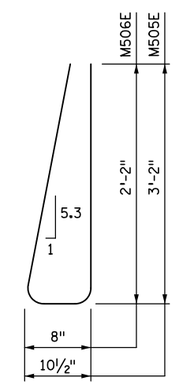

M505E, M506E

BILL OF REINFORCEMENT FOR BARRIER				
BAR	NO.	LENGTH	SHAPE	LOCATION
M501E		5'-7"		BARRIER DOWEL
M402E		7'-7"		BARRIER DOWEL
M403E	SER. OF 8	6'-11" TO 7'-7"		BARRIER DOWEL
M404E		6'-11"		BARRIER DOWEL
M505E		7'-2"		BARRIER VERTICAL
M506E		5'-0"		BARRIER VERTICAL
M407E		10'-4"		BARRIER VERTICAL
M408E	SER. OF 8	9'-7" TO 10'-4"		BARRIER VERTICAL
M409E		8'-11"		BARRIER VERTICAL
M4__E				BARRIER LONGIT.
M4__E				BARRIER LONGIT.
M4__E				BARRIER LONGIT.
M4__E				BARRIER LONGIT.
M4__E				BARRIER LONGIT.

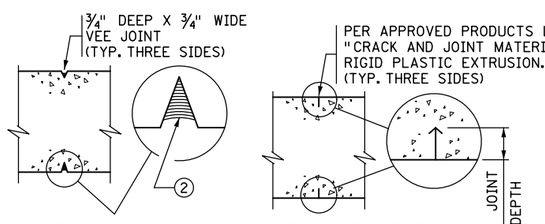

SECTION C-C
CAST-IN-PLACE CONSTRUCTION

SECTION C-C
SLIPFORM CONSTRUCTION

CONTROL JOINT DETAILS

FOR SLIPFORM CONSTRUCTION: IMMEDIATELY AFTER CONCRETE IS PLACED AND WHILE IT IS STILL WET, CREATE A ONE INCH STRAIGHT GROOVE USING A TROWEL. INSERT RIGID PLASTIC EXTRUSION INTO GROOVE TO A DEPTH ⅛" BELOW THE SURFACE; FINISH OVER GROOVE COMPLETELY HIDING THE EXTRUSION.

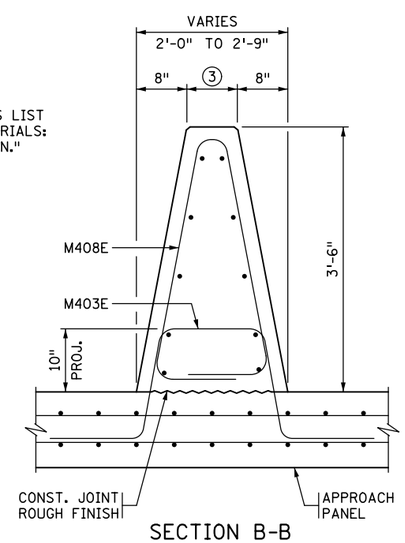

SECTION B-B
CONCRETE APPROACH ROADWAY

INCREASE M501E VERTICAL LEGS IF DECK SLAB THICKNESS IS GREATER THAN 9".

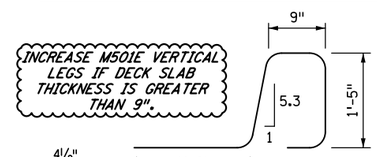

M501E

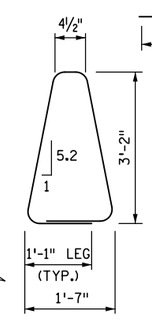

M409E

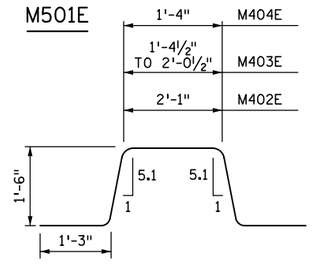

M402E, M403E, M404E

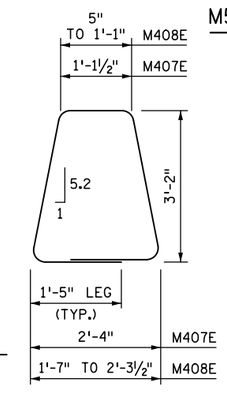

M407E, M408E

GENERAL NOTES

MEASURE PAYMENT LENGTH BETWEEN THE OUTSIDE ENDS OF THE BARRIER FROM THE E8 JOINT. MEASURED LENGTH IS FOR ONE SIDE OF THE SPLIT MEDIAN BARRIER.

CONCRETE BARRIER = 525 LBS./FT. (0.130 CU. YDS./FT.) PER SIDE.

FINISH ALL EDGES OF BARRIER WITH ½" CHAMFER, EXCEPT WHERE OTHERWISE NOTED.

SPACE CONTROL JOINTS AT 10 FT. MAXIMUM. REFER TO SUPERSTRUCTURE SHEET FOR SPECIFIC SPACING INFORMATION.

BARRIER QUANTITIES ARE LISTED IN SUMMARY OF QUANTITIES FOR SUPERSTRUCTURE.

① PLACE BAR ON TOP OF BOTTOM REINFORCEMENT MAT IN DECK.

② JOINT SEALANT PER MnDOT APPROVED/QUALIFIED PRODUCTS LIST - CRACK AND JOINT MATERIALS - SILICONE JOINT SEALERS.

③ VARIES FROM 8" TO 1'-5".

④ REFER TO "WATERPROOF EXPANSION DEVICE" STANDARD PLANS FOR COVER PLATE DETAILS.

REVISION: MAY 10, 2017

APPROVED: AUGUST 24, 2016

STATE BRIDGE ENGINEER

CERTIFIED BY _____ LICENSED PROFESSIONAL ENGINEER _____ DATE

NAME: LIC. NO.

TITLE: SPLIT MEDIAN BARRIER 42" (TYPE S, TL-4) PARAPET ABUTMENT (WITHOUT CONCRETE WEARING COURSE)

DES: DR: CHK: CHK:

SHEET NO. OF SHEETS

FIG. 5-397.145(C)

APPROVED:

BRIDGE NO.

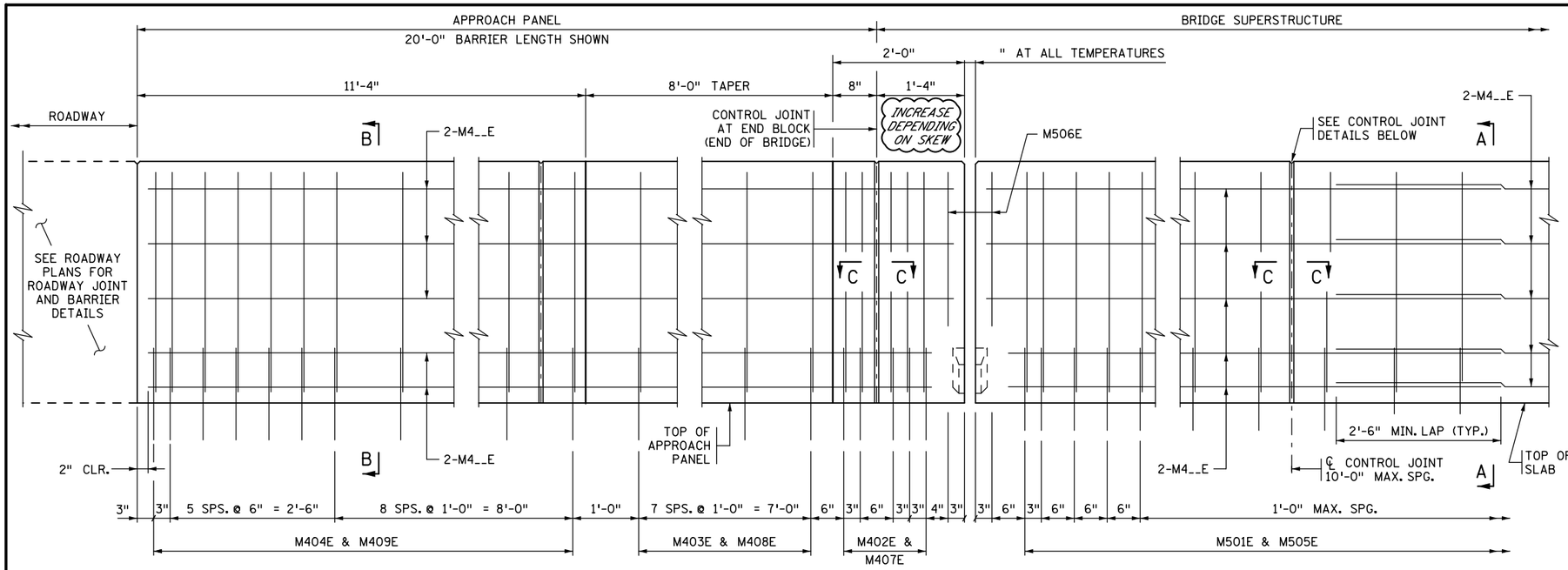

EXPANSION JOINT ④

EXPANSION DEVICE NOT SHOWN

CONTROL JOINT

INSIDE ELEVATION OF BARRIER

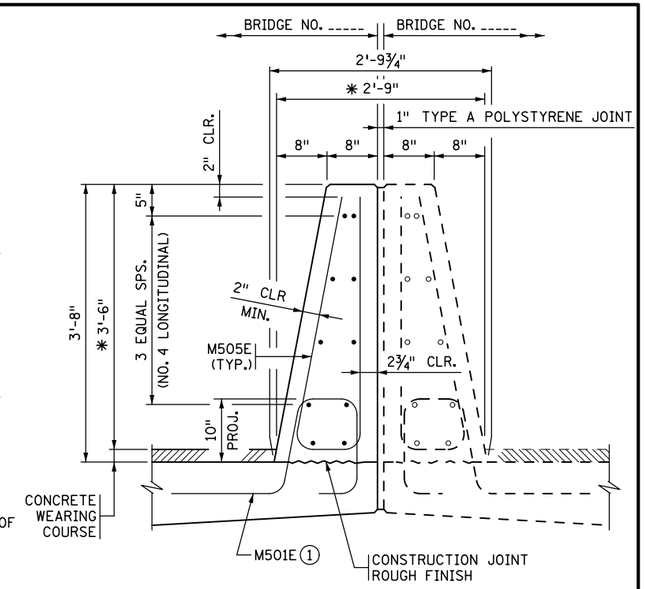

SECTION A-A

✱ DIMENSION SHOWN IS TO THE TOP OF THE WEARING COURSE AT GUTTERLINE.

DESIGNER NOTE
(REMOVE PRIOR TO PLOTTING FINAL PLAN):
VERIFY LENGTH OF BARRIER ON APPROACH PANEL WITH ROADWAY DESIGNER. REFER TO MEMO TO DESIGNERS (2016-01) FOR ADDITIONAL REQUIREMENTS REGARDING BARRIER PLACEMENT.

DESIGNER NOTE
(REMOVE PRIOR TO PLOTTING FINAL PLAN):
AVOID LAYOUTS WITH HORIZONTAL GAP BETWEEN SPLIT MEDIAN BARRIERS OF 2" TO 6", AS BARRIERS CANNOT BE SLIPFORMED. IF GAP EXCEEDS 6" CONSIDER USING STANDARD FIGURE 5-397.140 OR .141 IN LIEU OF THIS STANDARD.

BARRIER ON EACH SIDE MEETS NCHRP 350 TL-4 REQUIREMENTS ON BRIDGE DECK AND TL-3 ON APPROACH PANEL.

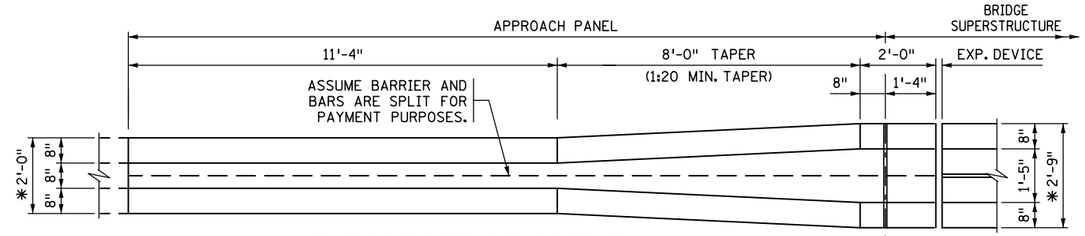

✱ DIMENSION SHOWN IS TO THE TOP OF THE WEARING COURSE AT GUTTERLINE.

PLAN VIEW OF APPROACH BARRIER

INCREASE M501E VERTICAL LEGS IF DECK SLAB THICKNESS IS GREATER THAN 9".

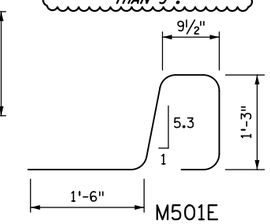

M501E

BILL OF REINFORCEMENT FOR BARRIER				
BAR	NO.	LENGTH	SHAPE	LOCATION
M501E		5'-4"		BARRIER DOWEL
M402E		7'-4"		BARRIER DOWEL
M403E	SER. OF 8	6'-8" TO 7'-4"		BARRIER DOWEL
M404E		6'-7"		BARRIER DOWEL
M505E		7'-6"		BARRIER VERTICAL
M506E		5'-3"		BARRIER VERTICAL
M407E		10'-8"		BARRIER VERTICAL
M408E	SER. OF 8	10'-0" TO 10'-7"		BARRIER VERTICAL
M409E		8'-11"		BARRIER VERTICAL
M4__E				BARRIER LONGIT.
M4__E				BARRIER LONGIT.
M4__E				BARRIER LONGIT.
M4__E				BARRIER LONGIT.

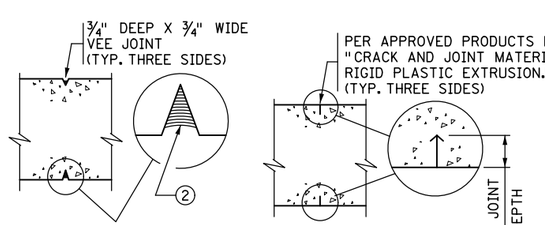

SECTION C-C
CAST-IN-PLACE CONSTRUCTION

SECTION C-C
SLIPFORM CONSTRUCTION

CONTROL JOINT DETAILS

FOR SLIPFORM CONSTRUCTION: IMMEDIATELY AFTER CONCRETE IS PLACED AND WHILE IT IS STILL WET, CREATE A ONE INCH STRAIGHT GROOVE USING A TROWEL. INSERT RIGID PLASTIC EXTRUSION INTO GROOVE TO A DEPTH ⅛" BELOW THE SURFACE; FINISH OVER GROOVE COMPLETELY HIDING THE EXTRUSION.

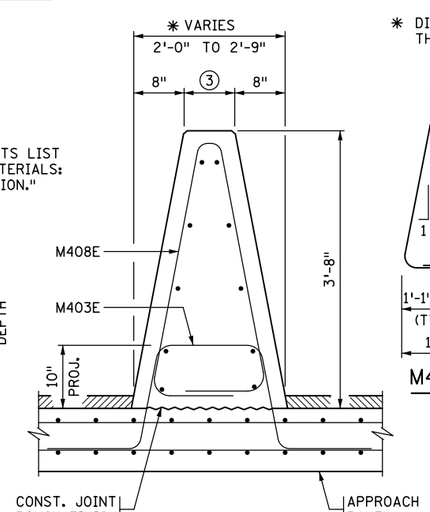

SECTION B-B

CONCRETE APPROACH ROADWAY

✱ DIMENSION SHOWN IS TO THE TOP OF THE WEARING COURSE AT GUTTERLINE.

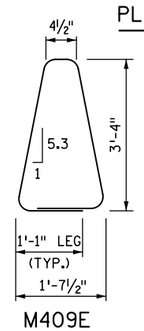

M409E

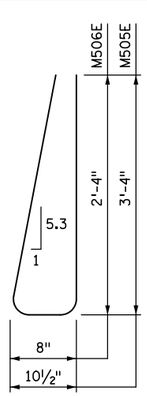

M505E, M506E

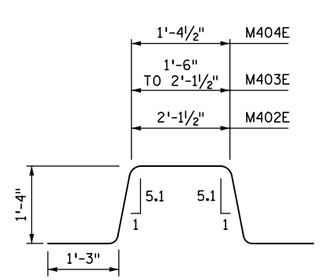

M402E, M403E, M404E

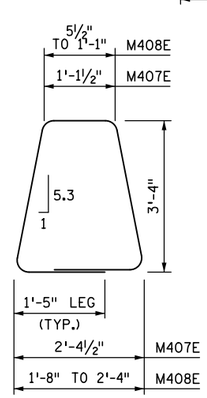

M407E, M408E

GENERAL NOTES

MEASURE PAYMENT LENGTH BETWEEN THE OUTSIDE ENDS OF THE BARRIER FROM THE E8 JOINT. MEASURED LENGTH IS FOR ONE SIDE OF THE SPLIT MEDIAN BARRIER.

CONCRETE BARRIER = 559 LBS./FT. (0.138 CU. YDS./FT.) PER SIDE.

FINISH ALL EDGES OF BARRIER WITH ½" CHAMFER, EXCEPT WHERE OTHERWISE NOTED.

SPACE CONTROL JOINTS AT 10 FT. MAXIMUM. REFER TO SUPERSTRUCTURE SHEET FOR SPECIFIC SPACING INFORMATION.

BARRIER QUANTITIES ARE LISTED IN SUMMARY OF QUANTITIES FOR SUPERSTRUCTURE.

① PLACE BAR ON TOP OF BOTTOM REINFORCEMENT MAT IN DECK.

② JOINT SEALANT PER MnDOT APPROVED/QUALIFIED PRODUCTS LIST - CRACK AND JOINT MATERIALS - SILICONE JOINT SEALERS.

③ VARIES FROM 8" TO 1'-5".

④ REFER TO "WATERPROOF EXPANSION DEVICE" STANDARD PLANS FOR COVER PLATE DETAILS.

REVISION: MAY 10, 2017

APPROVED: AUGUST 24, 2016
Kevin Western
STATE BRIDGE ENGINEER

CERTIFIED BY _____ LICENSED PROFESSIONAL ENGINEER _____ DATE

NAME: LIC. NO.

TITLE: SPLIT MEDIAN BARRIER 42" (TYPE S, TL-4)
PARAPET ABUTMENT
(WITH 2" CONCRETE WEARING COURSE)

DES: DR:
CHK: CHK:
SHEET NO. OF SHEETS

APPROVED:

FIG. 5-397.145(D)

BRIDGE NO.

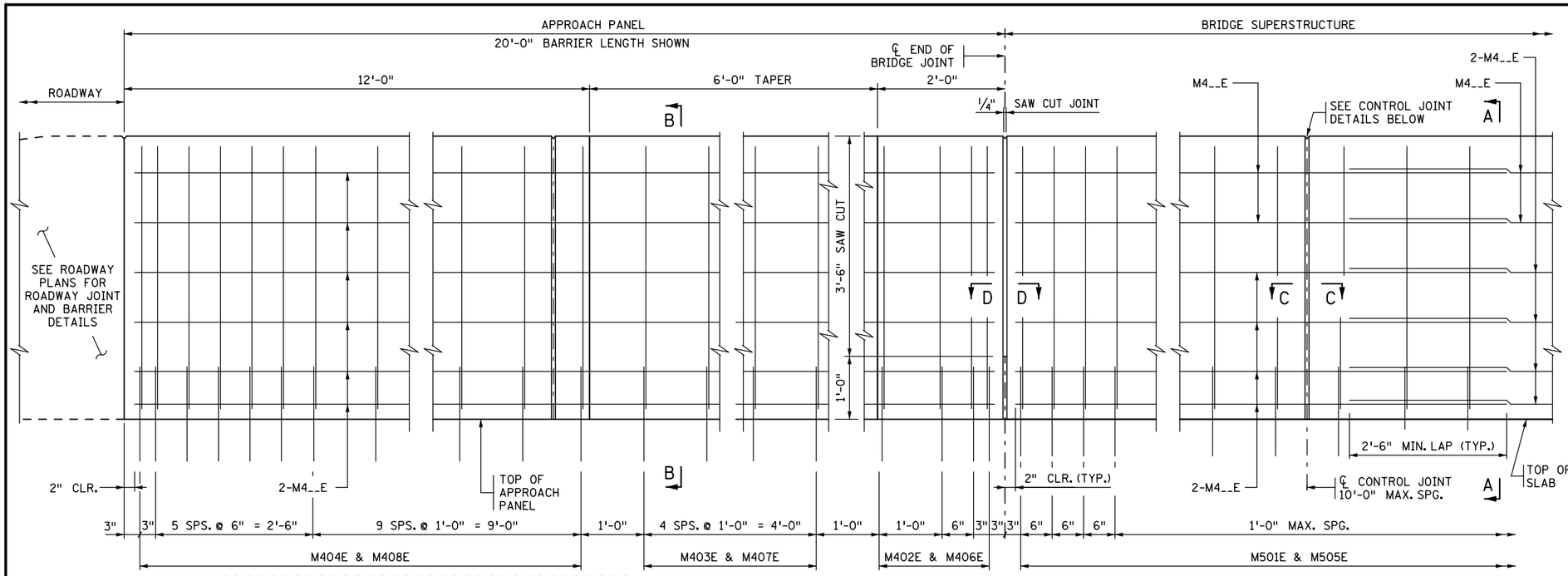

JOINT AT ABUTMENT

(INTEGRAL OR SEMI-INTEGRAL ABUTMENT)

CONTROL JOINT

INSIDE ELEVATION OF BARRIER

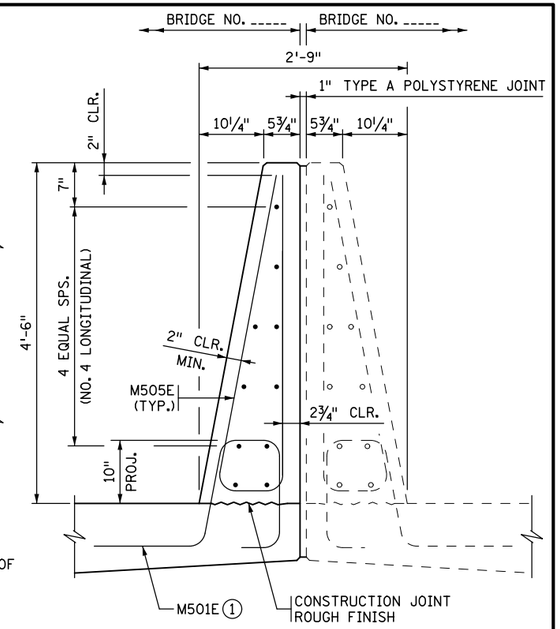

SECTION A-A

DESIGNER NOTE
(REMOVE PRIOR TO PLOTTING FINAL PLAN):
VERIFY LENGTH OF BARRIER ON APPROACH PANEL WITH ROADWAY DESIGNER. REFER TO MEMO TO DESIGNERS (2016-01) FOR ADDITIONAL REQUIREMENTS REGARDING BARRIER PLACEMENT.

DESIGNER NOTE
(REMOVE PRIOR TO PLOTTING FINAL PLAN):
AVOID LAYOUTS WITH HORIZONTAL GAP BETWEEN SPLIT MEDIAN BARRIERS OF 2" TO 6", AS BARRIERS CANNOT BE SLIPFORMED. IF GAP EXCEEDS 6" CONSIDER USING STANDARD FIGURE 5-.397-142 OR .143 IN LIEU OF THIS STANDARD.

BARRIER ON EACH SIDE MEETS NCHRP 350 TL-4 REQUIREMENTS ON BRIDGE DECK AND TL-3 ON APPROACH PANEL.

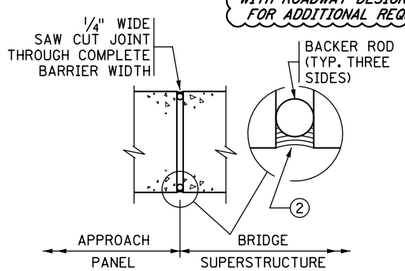

SECTION D-D

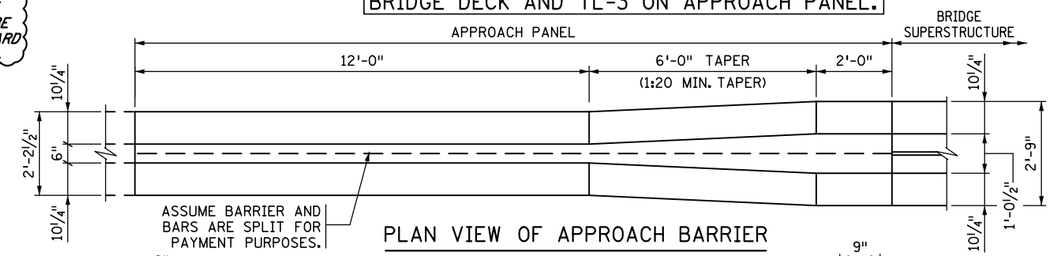

PLAN VIEW OF APPROACH BARRIER

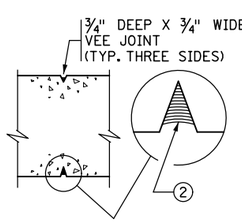

SECTION C-C

CAST-IN-PLACE CONSTRUCTION

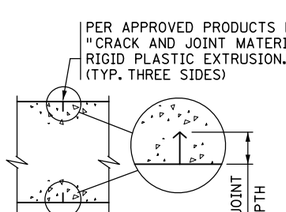

SECTION C-C

SLIPFORM CONSTRUCTION

CONTROL JOINT DETAILS

FOR SLIPFORM CONSTRUCTION: IMMEDIATELY AFTER CONCRETE IS PLACED AND WHILE IT IS STILL WET, CREATE A ONE INCH STRAIGHT GROOVE USING A TROWEL. INSERT RIGID PLASTIC EXTRUSION INTO GROOVE TO A DEPTH 1/8" BELOW THE SURFACE; FINISH OVER GROOVE COMPLETELY HIDING THE EXTRUSION.

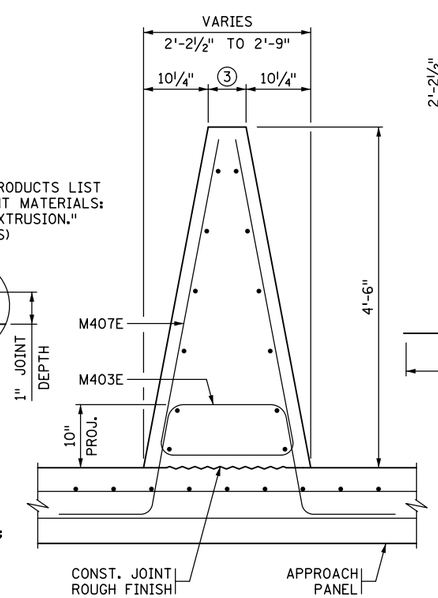

SECTION B-B

CONCRETE APPROACH ROADWAY

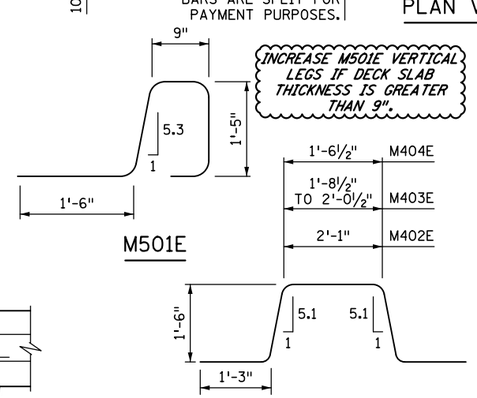

BILL OF REINFORCEMENT FOR BARRIER

BAR	NO.	LENGTH	SHAPE	LOCATION
M501E		5'-7"		BARRIER DOWEL
M402E		7'-8"		BARRIER DOWEL
M403E	SER. OF 5	7'-2" TO 7'-6"		BARRIER DOWEL
M404E		7'-1"		BARRIER DOWEL
M505E		9'-2"		BARRIER VERTICAL
M406E		11'-11"		BARRIER VERTICAL
M407E	SER. OF 5	10'-0" TO 10'-4"		BARRIER VERTICAL
M408E		10'-1"		BARRIER VERTICAL
M4__E				BARRIER LONGIT.
M4__E				BARRIER LONGIT.
M4__E				BARRIER LONGIT.
M4__E				BARRIER LONGIT.
M4__E				BARRIER LONGIT.

GENERAL NOTES

MEASURE PAYMENT LENGTH BETWEEN THE OUTSIDE ENDS OF THE BARRIER FROM THE E8 JOINT. MEASURED LENGTH IS FOR ONE SIDE OF THE SPLIT MEDIAN BARRIER.

CONCRETE BARRIER = 612 LBS./FT. (0.151 CU. YDS./FT.) PER SIDE.

FINISH ALL EDGES OF BARRIER WITH 1/2" CHAMFER, EXCEPT WHERE OTHERWISE NOTED.

SPACE CONTROL JOINTS AT 10 FT. MAXIMUM. REFER TO SUPERSTRUCTURE SHEET FOR SPECIFIC SPACING INFORMATION.

BARRIER QUANTITIES ARE LISTED IN SUMMARY OF QUANTITIES FOR SUPERSTRUCTURE.

① PLACE BAR ON TOP OF BOTTOM REINFORCEMENT MAT IN DECK.

② JOINT SEALANT PER MnDOT APPROVED/QUALIFIED PRODUCTS LIST - CRACK AND JOINT MATERIALS - SILICONE JOINT SEALERS.

③ VARIES FROM 6" TO 1'-0 1/2".

REVISION: MAY 10, 2017

APPROVED: AUGUST 24, 2016

Kevin Western

STATE BRIDGE ENGINEER

CERTIFIED BY _____ LICENSED PROFESSIONAL ENGINEER _____ DATE

NAME: LIC. NO.

TITLE: SPLIT MEDIAN BARRIER 54" (TYPE S, TL-4)
INTEGRAL OR SEMI-INTEGRAL ABUTMENT
(WITHOUT CONCRETE WEARING COURSE)

DES: DR: CHK: CHK:

SHEET NO. OF SHEETS

APPROVED:

FIG. 5-397.146(A)

BRIDGE NO.

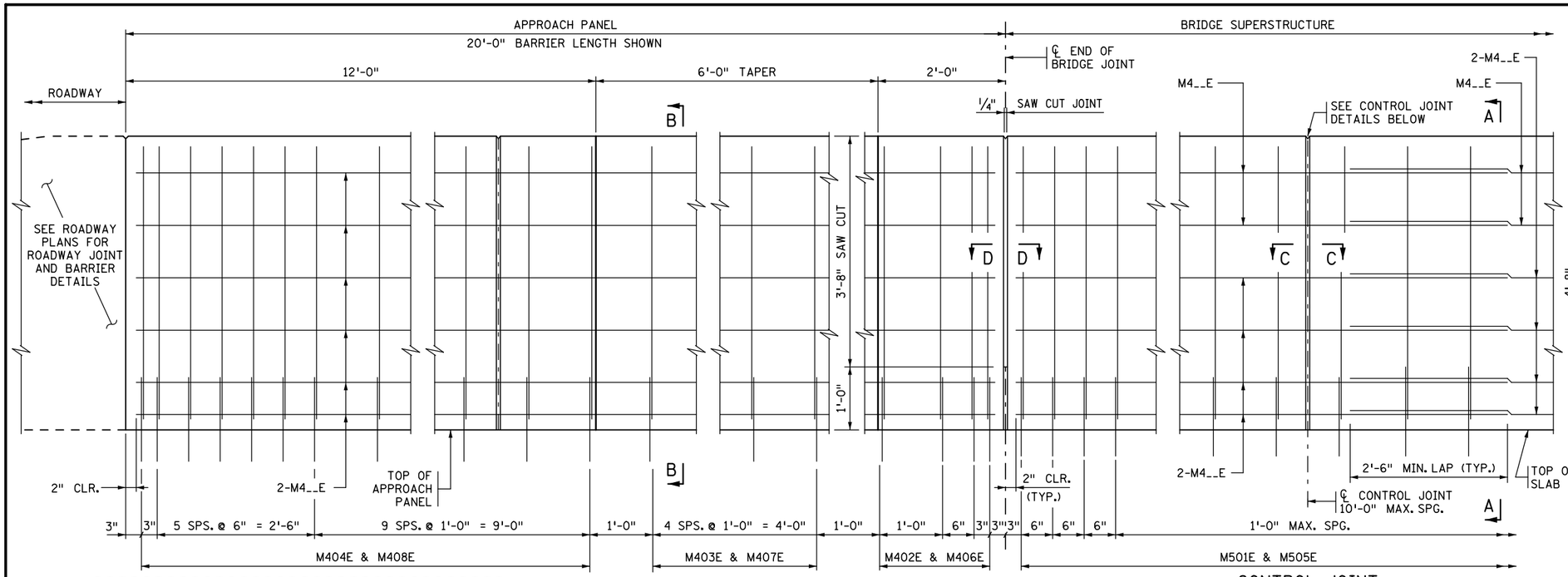

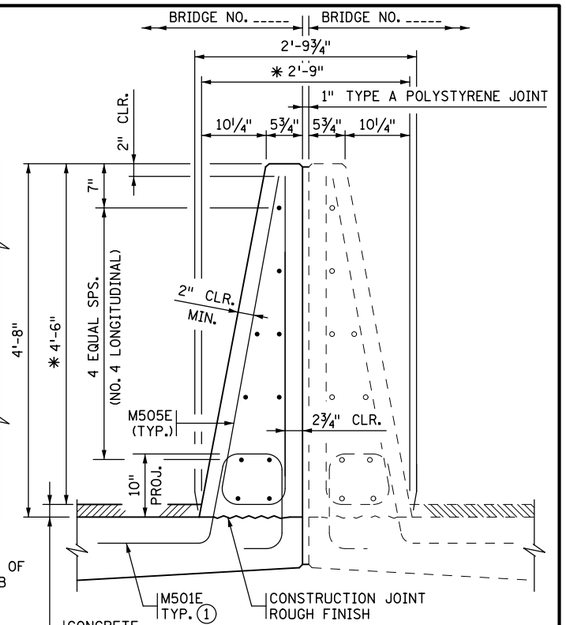

SECTION A-A

* DIMENSION SHOWN IS TO THE TOP OF THE WEARING COURSE AT GUTTERLINE.

DESIGNER NOTE
(REMOVE PRIOR TO PLOTTING FINAL PLAN):
VERIFY LENGTH OF BARRIER ON APPROACH PANEL WITH ROADWAY DESIGNER. REFER TO MEMO TO DESIGNERS (2016-01) FOR ADDITIONAL REQUIREMENTS REGARDING BARRIER PLACEMENT.

JOINT AT ABUTMENT

(INTEGRAL OR SEMI-INTEGRAL ABUTMENT)

CONTROL JOINT

BARRIER ON EACH SIDE MEETS NCHRP 350 TL-4 REQUIREMENTS ON BRIDGE DECK AND TL-3 ON APPROACH PANEL.

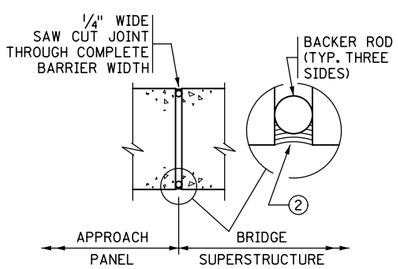

SECTION D-D

DESIGNER NOTE
(REMOVE PRIOR TO PLOTTING FINAL PLAN):
AVOID LAYOUTS WITH HORIZONTAL GAP BETWEEN SPLIT MEDIAN BARRIERS OF 2" TO 6", AS BARRIERS CANNOT BE SLIPFORMED. IF GAP EXCEEDS 6" CONSIDER USING STANDARD FIGURE 5-397.142 OR .143 IN LIEU OF THIS STANDARD.

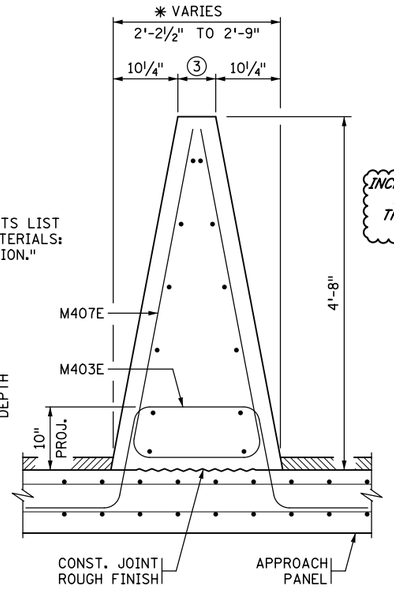

SECTION B-B

CONCRETE APPROACH ROADWAY.
* DIMENSION SHOWN IS TO THE TOP OF THE WEARING COURSE AT GUTTERLINE.

INSIDE ELEVATION OF BARRIER

CONCRETE WEARING COURSE NOT SHOWN

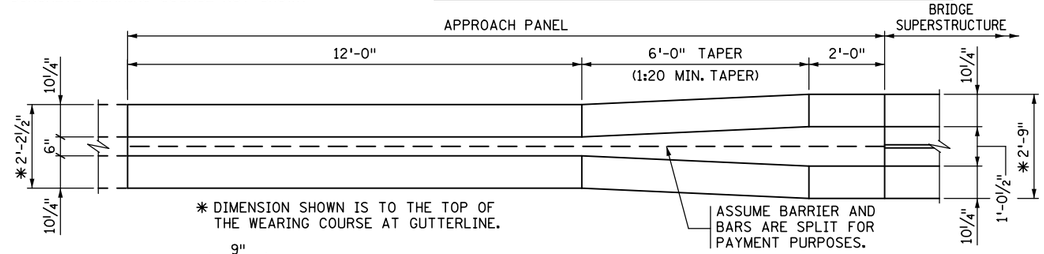

PLAN VIEW OF APPROACH BARRIER

INCREASE M501E VERTICAL LEGS IF DECK SLAB THICKNESS IS GREATER THAN 9".

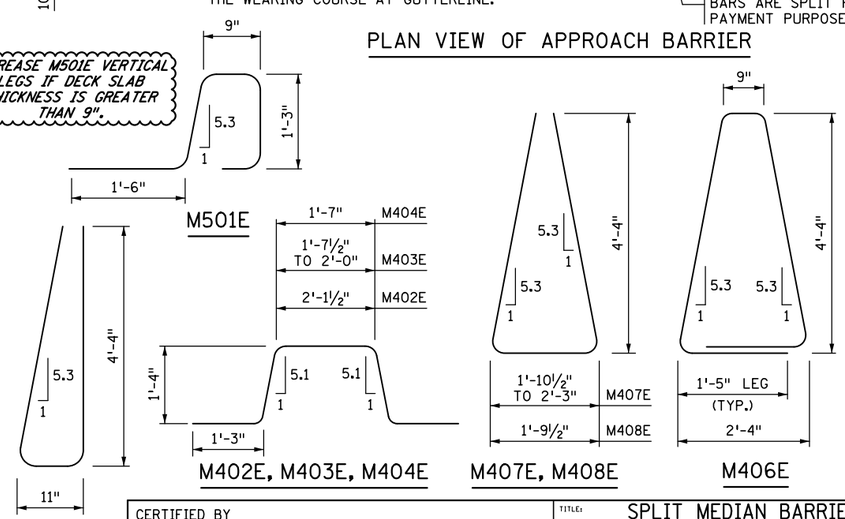

BILL OF REINFORCEMENT FOR BARRIER

BAR	NO.	LENGTH	SHAPE	LOCATION
M501E		5'-3"		BARRIER DOWEL
M402E		7'-4"		BARRIER DOWEL
M403E	SER. OF 5	6'-10" TO 7'-2"		BARRIER DOWEL
M404E		6'-9"		BARRIER DOWEL
M505E		9'-7"		BARRIER VERTICAL
M406E		12'-3"		BARRIER VERTICAL
M407E	SER. OF 5	10'-7" TO 10'-11"		BARRIER VERTICAL
M408E		10'-5"		BARRIER VERTICAL
M4__E				BARRIER LONGIT.
M4__E				BARRIER LONGIT.
M4__E				BARRIER LONGIT.
M4__E				BARRIER LONGIT.
M4__E				BARRIER LONGIT.

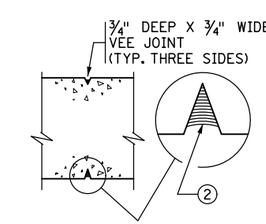

SECTION C-C

CAST-IN-PLACE CONSTRUCTION

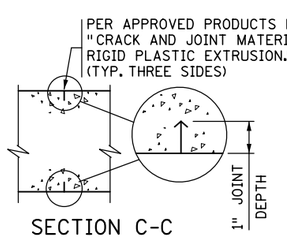

SECTION C-C

SLIPFORM CONSTRUCTION

CONTROL JOINT DETAILS

FOR SLIPFORM CONSTRUCTION: IMMEDIATELY AFTER CONCRETE IS PLACED AND WHILE IT IS STILL WET, CREATE A ONE INCH STRAIGHT GROOVE USING A TROWEL. INSERT RIGID PLASTIC EXTRUSION INTO GROOVE TO A DEPTH 1/8" BELOW THE SURFACE; FINISH OVER GROOVE COMPLETELY HIDING THE EXTRUSION.

GENERAL NOTES

MEASURE PAYMENT LENGTH BETWEEN THE OUTSIDE ENDS OF THE BARRIER FROM THE E8 JOINT. MEASURED LENGTH IS FOR ONE SIDE OF THE SPLIT MEDIAN BARRIER..

CONCRETE BARRIER = 646 LBS./FT. (0.160 CU. YDS./FT.) PER SIDE.

FINISH ALL EDGES OF BARRIER WITH 1/2" CHAMFER, EXCEPT WHERE OTHERWISE NOTED.

SPACE CONTROL JOINTS AT 10 FT. MAXIMUM. REFER TO SUPERSTRUCTURE SHEET FOR SPECIFIC SPACING INFORMATION.

BARRIER QUANTITIES ARE LISTED IN SUMMARY OF QUANTITIES FOR SUPERSTRUCTURE.

1. PLACE BAR ON TOP OF BOTTOM REINFORCEMENT MAT IN DECK.
2. JOINT SEALANT PER MnDOT APPROVED/QUALIFIED PRODUCTS LIST - CRACK AND JOINT MATERIALS - SILICONE JOINT SEALERS.
3. VARIES FROM 6" TO 1'-0 1/2".

REVISION: MAY 10, 2017

APPROVED: AUGUST 24, 2016
Kevin Western
STATE BRIDGE ENGINEER

CERTIFIED BY _____ LICENSED PROFESSIONAL ENGINEER _____ DATE
NAME: LIC. NO.

TITLE: SPLIT MEDIAN BARRIER 54" (TYPE S, TL-4)
INTEGRAL OR SEMI-INTEGRAL ABUTMENT (WITH 2" CONCRETE WEARING COURSE)

DES:	DR:	APPROVED:	BRIDGE NO.
CHK:	CHK:		
SHEET NO. OF SHEETS			

FIG. 5-397.146(B)

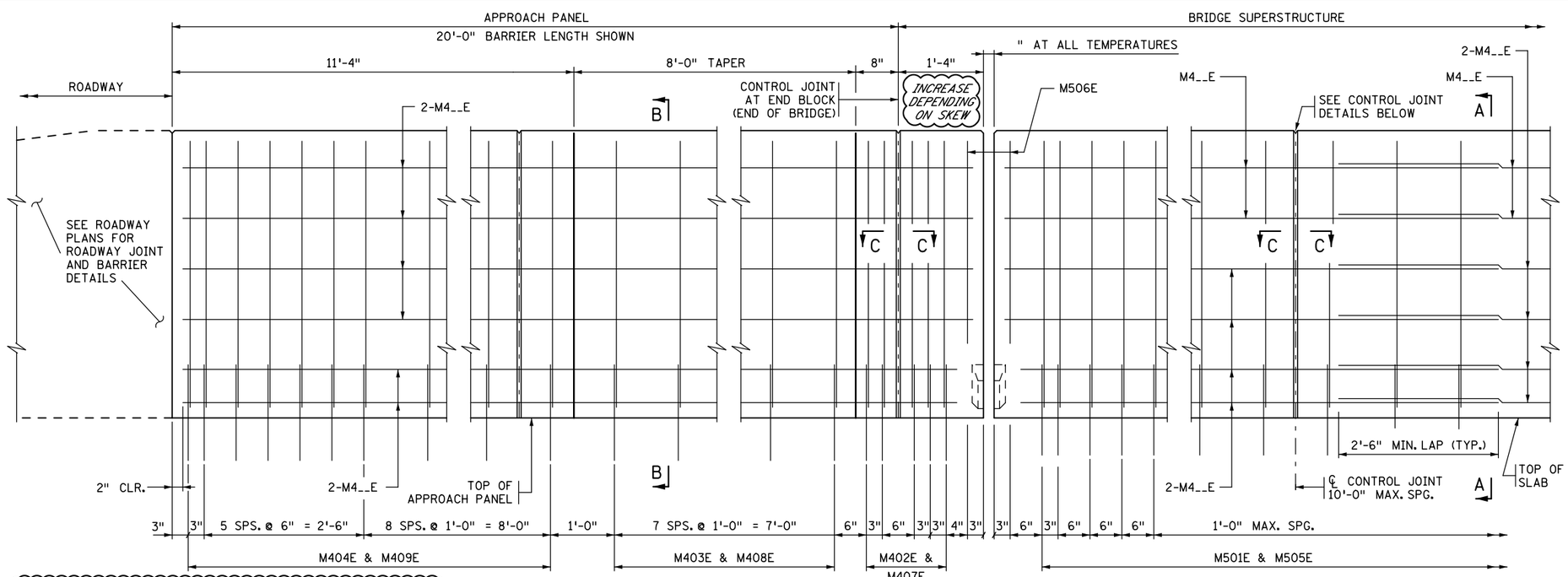

JOINT AT ABUTMENT ④

(INTEGRAL OR SEMI-INTEGRAL ABUTMENT)

CONTROL JOINT

INSIDE ELEVATION OF BARRIER

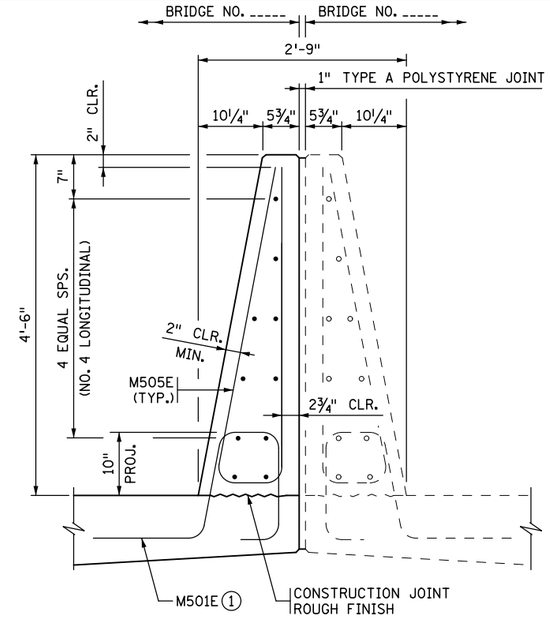

SECTION A-A

DESIGNER NOTE
(REMOVE PRIOR TO PLOTTING FINAL PLAN):
VERIFY LENGTH OF BARRIER ON APPROACH PANEL WITH ROADWAY DESIGNER. REFER TO MEMO TO DESIGNERS (2016-01) FOR ADDITIONAL REQUIREMENTS REGARDING BARRIER PLACEMENT.

DESIGNER NOTE
(REMOVE PRIOR TO PLOTTING FINAL PLAN):
AVOID LAYOUTS WITH HORIZONTAL GAP BETWEEN SPLIT MEDIAN BARRIERS OF 2" TO 6", AS BARRIERS CANNOT BE SLIPFORMED. IF GAP EXCEEDS 6" CONSIDER USING STANDARD FIGURE 5-397.142 OR .143 IN LIEU OF THIS STANDARD.

BARRIER ON EACH SIDE MEETS NCHRP 350 TL-4 REQUIREMENTS ON BRIDGE DECK AND TL-3 ON APPROACH PANEL.

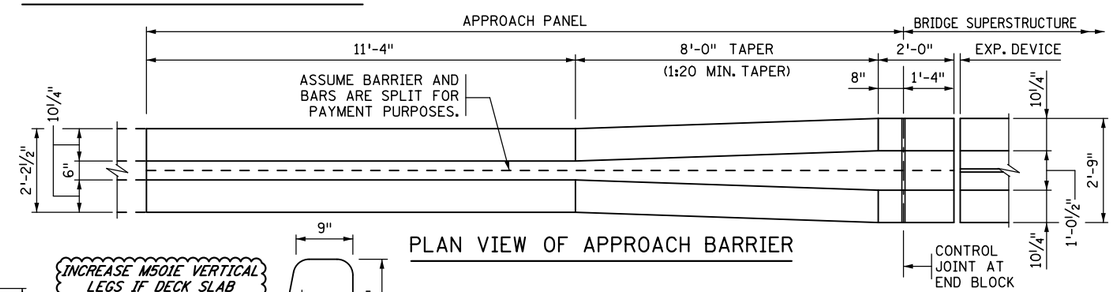

PLAN VIEW OF APPROACH BARRIER

BILL OF REINFORCEMENT FOR BARRIER				
BAR	NO.	LENGTH	SHAPE	LOCATION
M501E		5'-7"		BARRIER DOWEL
M402E	4	7'-8"		BARRIER DOWEL
M403E	SER. OF 8	7'-1" TO 7'-7"		BARRIER DOWEL
M404E		7'-1"		BARRIER DOWEL
M505E		9'-2"		BARRIER VERTICAL
M506E		7'-0"		BARRIER VERTICAL
M407E		11'-11"		BARRIER VERTICAL
M408E	SER. OF 8	10'-2" TO 10'-8"		BARRIER VERTICAL
M409E		10'-1"		BARRIER VERTICAL
M4__E				BARRIER LONGIT.
M4__E				BARRIER LONGIT.
M4__E				BARRIER LONGIT.
M4__E				BARRIER LONGIT.
M4__E				BARRIER LONGIT.

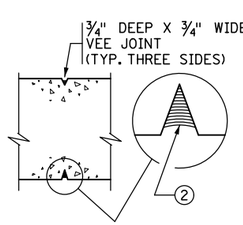

SECTION C-C

CAST-IN-PLACE CONSTRUCTION

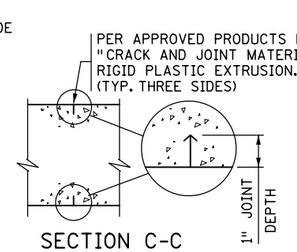

SECTION C-C

SLIPFORM CONSTRUCTION

CONTROL JOINT DETAILS

FOR SLIPFORM CONSTRUCTION: IMMEDIATELY AFTER CONCRETE IS PLACED AND WHILE IT IS STILL WET, CREATE A ONE INCH STRAIGHT GROOVE USING A TROWEL. INSERT RIGID PLASTIC EXTRUSION INTO GROOVE TO A DEPTH ⅛" BELOW THE SURFACE; FINISH OVER GROOVE COMPLETELY HIDING THE EXTRUSION.

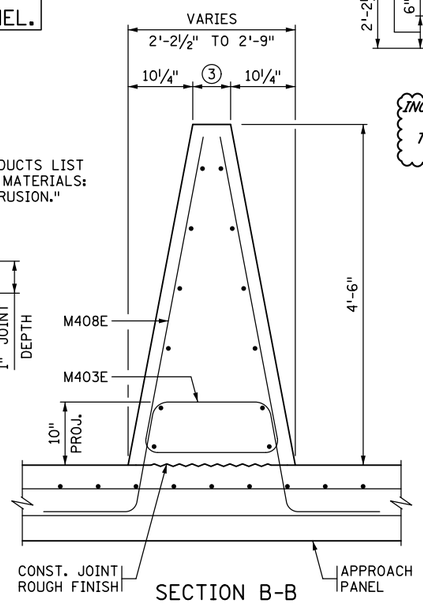

SECTION B-B

CONCRETE APPROACH ROADWAY

INCREASE M501E VERTICAL LEGS IF DECK SLAB THICKNESS IS GREATER THAN 9".

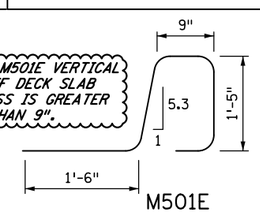

M501E

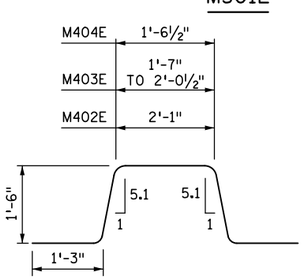

M402E, M403E, M404E

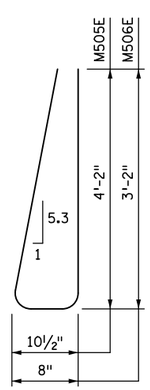

M505E, M506E

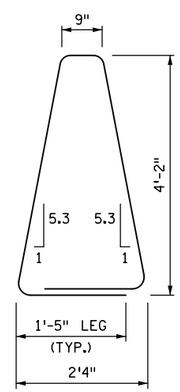

M407E

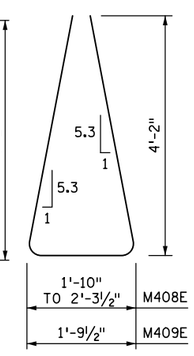

M408E, M409E

GENERAL NOTES

MEASURE PAYMENT LENGTH BETWEEN THE OUTSIDE ENDS OF THE BARRIER FROM THE E8 JOINT. MEASURED LENGTH IS FOR ONE SIDE OF THE SPLIT MEDIAN BARRIER.

CONCRETE BARRIER = 612 LBS./FT. (0.151 CU. YDS./FT.) PER SIDE.

FINISH ALL EDGES OF BARRIER WITH ½" CHAMFER, EXCEPT WHERE OTHERWISE NOTED.

SPACE CONTROL JOINTS AT 10 FT. MAXIMUM. REFER TO SUPERSTRUCTURE SHEET FOR SPECIFIC SPACING INFORMATION.

BARRIER QUANTITIES ARE LISTED IN SUMMARY OF QUANTITIES FOR SUPERSTRUCTURE.

① PLACE BAR ON TOP OF BOTTOM REINFORCEMENT MAT IN DECK.

② JOINT SEALANT PER MnDOT APPROVED/QUALIFIED PRODUCTS LIST - CRACK AND JOINT MATERIALS - SILICONE JOINT SEALERS.

③ VARIES FROM 6" TO 1'-0½".

④ REFER TO "WATERPROOF EXPANSION DEVICE" STANDARD PLANS FOR COVER PLATE DETAILS.

REVISION: MAY 10, 2017

APPROVED: AUGUST 24, 2016

Kevin Western

STATE BRIDGE ENGINEER

CERTIFIED BY _____ LICENSED PROFESSIONAL ENGINEER _____ DATE

NAME: LIC. NO.

TITLE: SPLIT MEDIAN BARRIER 54" (TYPE S, TL-4) PARAPET ABUTMENT (WITHOUT CONCRETE WEARING COURSE)

DES: DR: CHK: CHK:

SHEET NO. OF SHEETS

FIG. 5-397.146(C)

APPROVED:

BRIDGE NO.

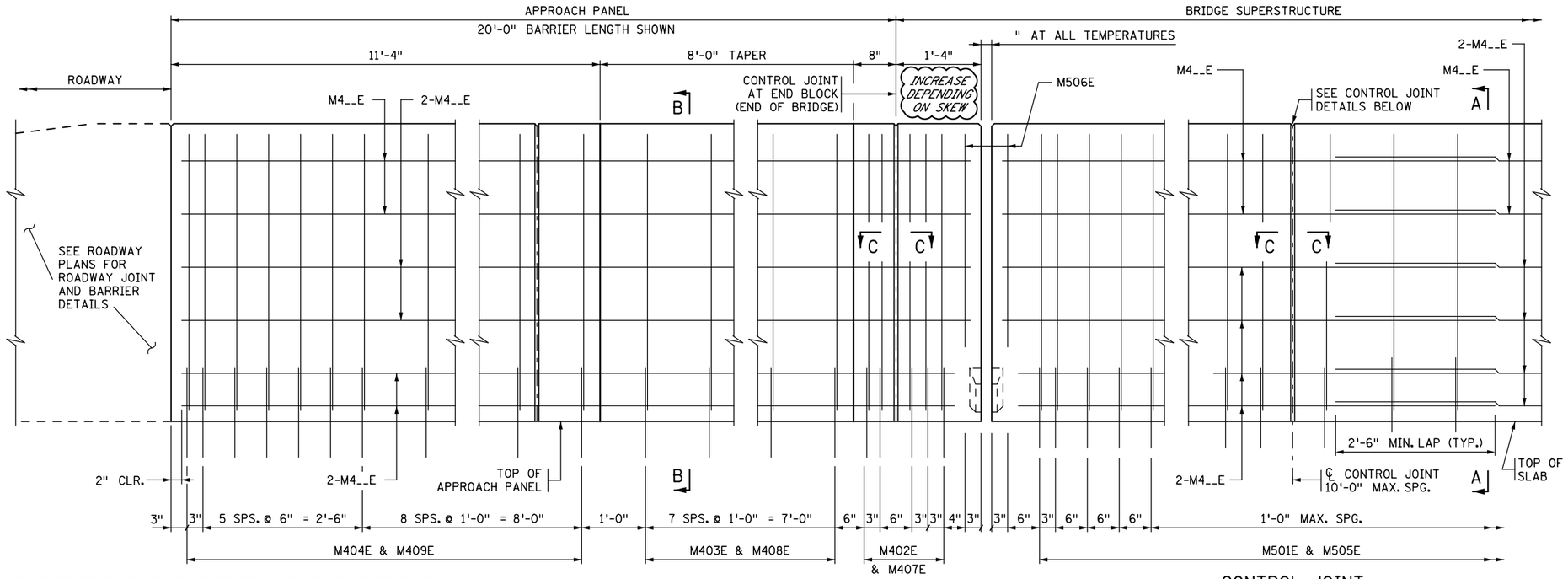

JOINT AT ABUTMENT ④

(INTEGRAL OR SEMI-INTEGRAL ABUTMENT)

CONTROL JOINT

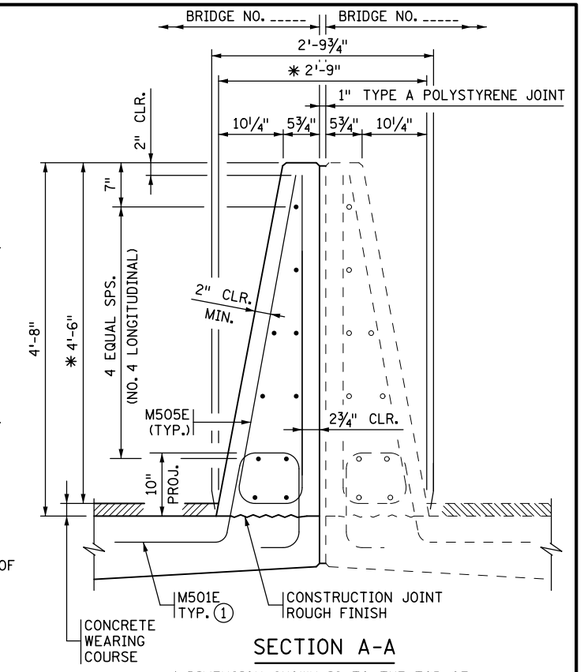

SECTION A-A

✱ DIMENSION SHOWN IS TO THE TOP OF THE WEARING COURSE AT GUTTERLINE.

DESIGNER NOTE
(REMOVE PRIOR TO PLOTTING FINAL PLAN):
VERIFY LENGTH OF BARRIER ON APPROACH PANEL WITH ROADWAY DESIGNER. REFER TO MEMO TO DESIGNERS (2016-01) FOR ADDITIONAL REQUIREMENTS REGARDING BARRIER PLACEMENT.

DESIGNER NOTE
(REMOVE PRIOR TO PLOTTING FINAL PLAN):
AVOID LAYOUTS WITH HORIZONTAL GAP BETWEEN SPLIT MEDIAN BARRIERS OF 2" TO 6", AS BARRIERS CANNOT BE SLIPFORMED. IF GAP EXCEEDS 6" CONSIDER USING STANDARD FIGURE 5-.397-142 OR .143 IN LIEU OF THIS STANDARD.

BARRIER ON EACH SIDE MEETS NCHRP 350 TL-4 REQUIREMENTS ON BRIDGE DECK AND TL-3 ON APPROACH PANEL.

INSIDE ELEVATION OF BARRIER

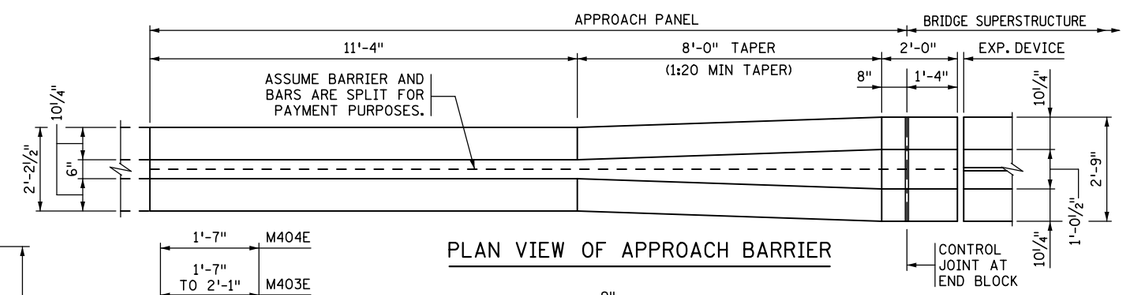

PLAN VIEW OF APPROACH BARRIER

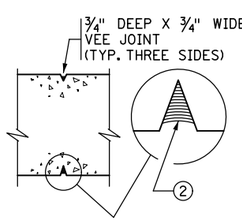

SECTION C-C

CAST-IN-PLACE CONSTRUCTION

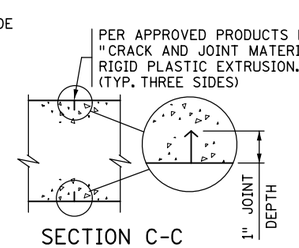

SECTION C-C

SLIPFORM CONSTRUCTION

CONTROL JOINT DETAILS

FOR SLIPFORM CONSTRUCTION: IMMEDIATELY AFTER CONCRETE IS PLACED AND WHILE IT IS STILL WET, CREATE A ONE INCH STRAIGHT GROOVE USING A TROWEL. INSERT RIGID PLASTIC EXTRUSION INTO GROOVE TO A DEPTH ⅛" BELOW THE SURFACE; FINISH OVER GROOVE COMPLETELY HIDING THE EXTRUSION.

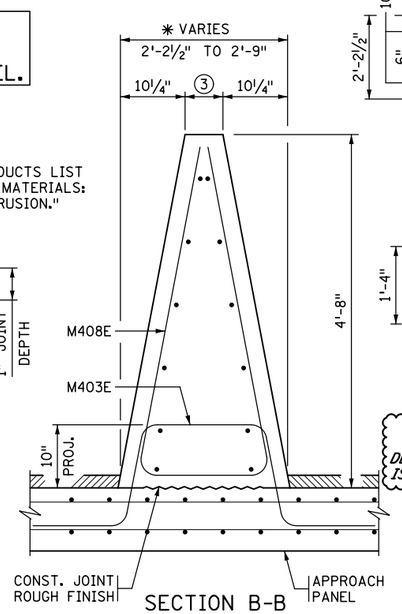

SECTION B-B

CONCRETE APPROACH ROADWAY.
✱ DIMENSION SHOWN IS TO THE TOP OF THE WEARING COURSE AT GUTTERLINE.

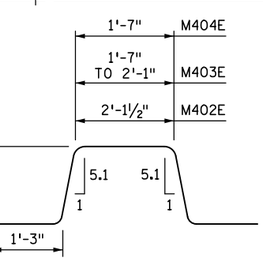

M402E, M403E, M404E

INCREASE M501E VERTICAL LEGS IF DECK SLAB THICKNESS IS GREATER THAN 9".

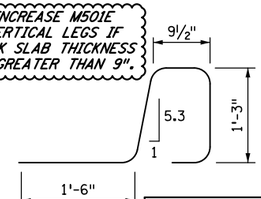

M501E

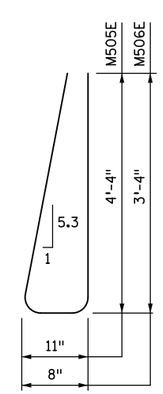

M505E, M506E

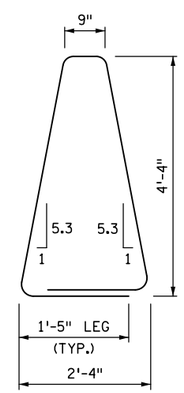

M407E

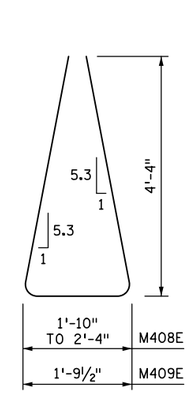

M408E, M409E

BILL OF REINFORCEMENT FOR BARRIER

BAR	NO.	LENGTH	SHAPE	LOCATION
M501E		5'-3"		BARRIER DOWEL
M402E		7'-4"		BARRIER DOWEL
M403E	SER. OF 8	6'-10" TO 7'-2"		BARRIER DOWEL
M404E		6'-9"		BARRIER DOWEL
M505E		9'-7"		BARRIER VERTICAL
M506E		7'-4"		BARRIER VERTICAL
M407E		12'-3"		BARRIER VERTICAL
M408E	SER. OF 8	10'-6" TO 11'-0"		BARRIER VERTICAL
M409E		10'-5"		BARRIER VERTICAL
M4__E				BARRIER LONGIT.
M4__E				BARRIER LONGIT.
M4__E				BARRIER LONGIT.
M4__E				BARRIER LONGIT.
M4__E				BARRIER LONGIT.

GENERAL NOTES

MEASURE PAYMENT LENGTH BETWEEN THE OUTSIDE ENDS OF THE BARRIER FROM THE E8 JOINT. MEASURED LENGTH IS FOR ONE SIDE OF THE SPLIT MEDIAN BARRIER.

CONCRETE BARRIER = 646 LBS./FT. (0.160 CU. YDS./FT.) PER SIDE.

FINISH ALL EDGES OF BARRIER WITH ½" CHAMFER, EXCEPT WHERE OTHERWISE NOTED.

SPACE CONTROL JOINTS AT 10 FT. MAXIMUM. REFER TO SUPERSTRUCTURE SHEET FOR SPECIFIC SPACING INFORMATION.

BARRIER QUANTITIES ARE LISTED IN SUMMARY OF QUANTITIES FOR SUPERSTRUCTURE.

① PLACE BAR ON TOP OF BOTTOM REINFORCEMENT MAT IN DECK.
② JOINT SEALANT PER MnDOT APPROVED/QUALIFIED PRODUCTS LIST - CRACK AND JOINT MATERIALS - SILICONE JOINT SEALERS.
③ VARIES FROM 6" TO 1'-0½".
④ REFER TO "WATERPROOF EXPANSION DEVICE" STANDARD PLANS FOR COVER PLATE DETAILS.

REVISION: MAY 10, 2017
APPROVED: AUGUST 24, 2016
STATE BRIDGE ENGINEER

CERTIFIED BY _____ LICENSED PROFESSIONAL ENGINEER _____ DATE
NAME: LIC. NO.

TITLE: SPLIT MEDIAN BARRIER 54" (TYPE S, TL-4)
PARAPET ABUTMENT
(WITH 2" CONCRETE WEARING COURSE)

DES: DR: CHK: CHK:
SHEET NO. OF SHEETS

FIG. 5-397.146(D)
APPROVED:
BRIDGE NO.

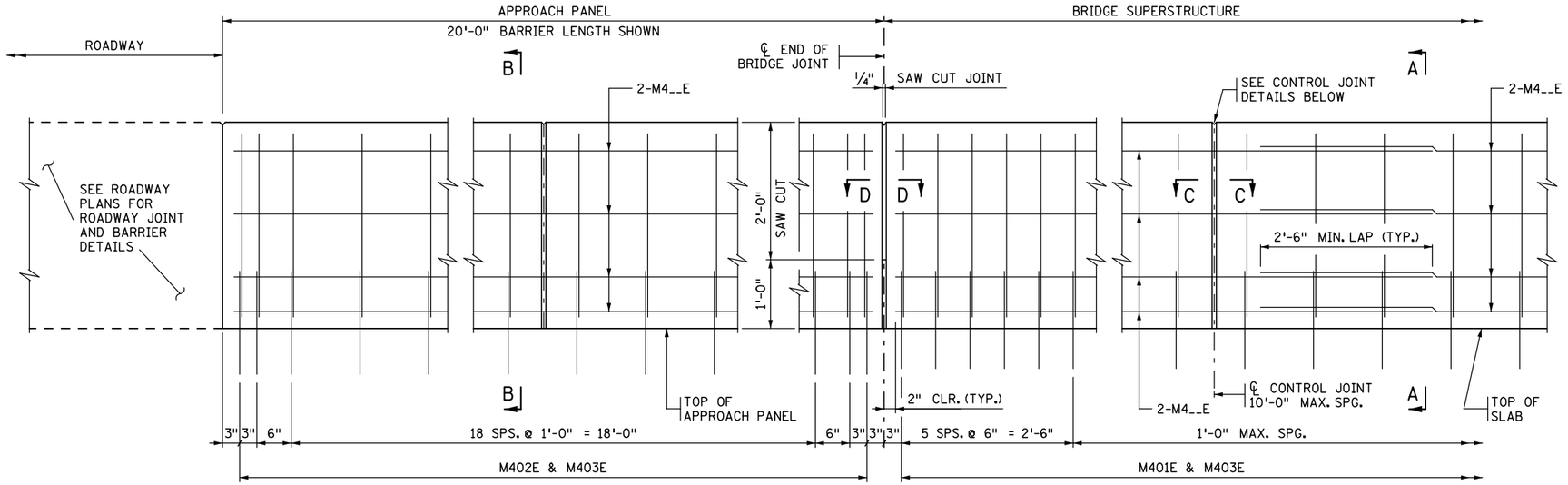

JOINT AT ABUTMENT

(INTEGRAL OR SEMI-INTEGRAL ABUTMENT)

CONTROL JOINT

INSIDE ELEVATION OF BARRIER

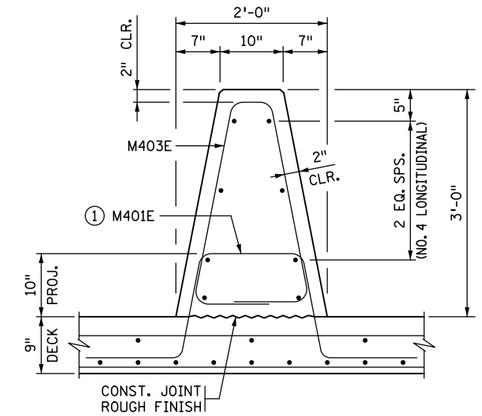

SECTION A-A

DESIGNER NOTE
(REMOVE PRIOR TO PLOTTING FINAL PLAN):
VERIFY LENGTH OF BARRIER ON APPROACH PANEL WITH ROADWAY DESIGNER. REFER TO MEMO TO DESIGNERS (2016-01) FOR ADDITIONAL REQUIREMENTS REGARDING BARRIER PLACEMENT.

BARRIER MEETS NCHRP 350 TL-4 REQUIREMENTS ON BRIDGE DECK AND TL-3 ON APPROACH PANEL.

BILL OF REINFORCEMENT FOR BARRIER				
BAR	NO.	LENGTH	SHAPE	LOCATION
M401E		6'-9"		BARRIER DOWEL
M402E		6'-10"		BARRIER DOWEL
M403E		8'-1"		BARRIER VERTICAL
M4__E				BARRIER LONGITUDINAL
M4__E				BARRIER LONGITUDINAL
M4__E				BARRIER LONGITUDINAL
M4__E				BARRIER LONGITUDINAL
M4__E				BARRIER LONGITUDINAL

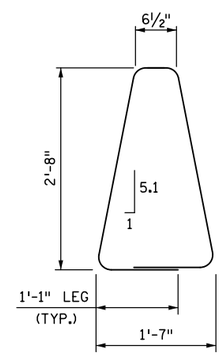

M403E

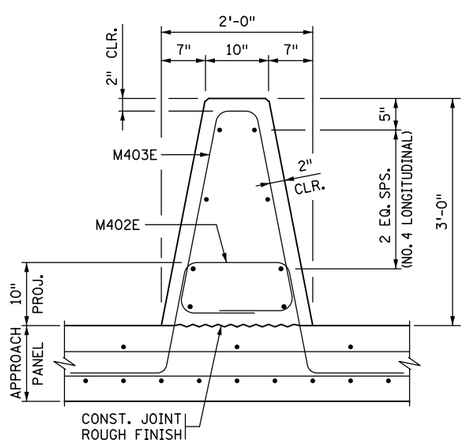

SECTION B-B

CONCRETE APPROACH PANEL

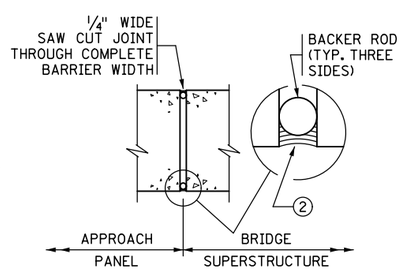

SECTION D-D

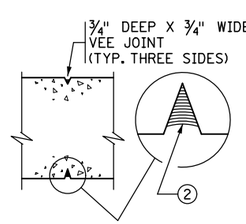

SECTION C-C

CAST-IN-PLACE CONSTRUCTION

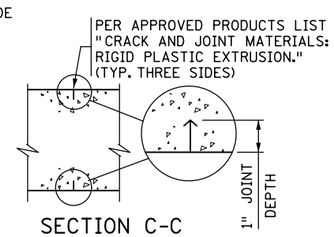

SECTION C-C

SLIPFORM CONSTRUCTION

CONTROL JOINT DETAILS

FOR SLIPFORM CONSTRUCTION: IMMEDIATELY AFTER CONCRETE IS PLACED AND WHILE IT IS STILL WET, CREATE A ONE INCH STRAIGHT GROOVE USING A TROWEL. INSERT RIGID PLASTIC EXTRUSION INTO GROOVE TO A DEPTH 1/8" BELOW THE SURFACE; FINISH OVER GROOVE COMPLETELY HIDING THE EXTRUSION.

INCREASE M401E VERTICAL LEGS IF DECK SLAB THICKNESS IS GREATER THAN 9".

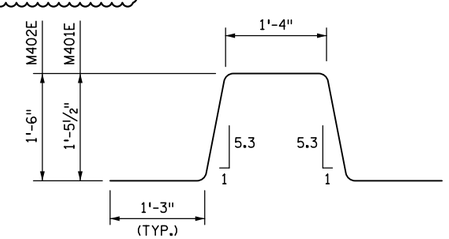

M401E & M402E

GENERAL NOTES

MEASURE PAYMENT LENGTH BETWEEN THE OUTSIDE ENDS OF THE BARRIER FROM THE E8 JOINT.

CONCRETE BARRIER = 638 LBS./FT. (0.157 CU. YDS/FT.)

FINISH ALL EDGES OF BARRIER WITH ½" CHAMFER EXCEPT WHERE OTHERWISE NOTED.

SPACE CONTROL JOINTS AT 10 FT. MAXIMUM. REFER TO SUPERSTRUCTURE SHEET FOR SPECIFIC SPACING INFORMATION.

BARRIER QUANTITIES ARE LISTED IN SUMMARY OF QUANTITIES FOR SUPERSTRUCTURE.

① PLACE BAR ON TOP OF BOTTOM REINFORCEMENT MAT IN DECK.

② JOINT SEALANT PER MnDOT APPROVED/QUALIFIED PRODUCTS LIST - CRACK AND JOINT MATERIALS - SILICONE JOINT SEALERS.

REVISION: MAY 10, 2017

APPROVED: AUGUST 24, 2016

Kevin Western

STATE BRIDGE ENGINEER

CERTIFIED BY _____ LICENSED PROFESSIONAL ENGINEER _____ DATE

NAME: LIC. NO.

TITLE: SOLID MEDIAN BARRIER 36" (TYPE S, TL-4)

INTEGRAL OR SEMI-INTEGRAL ABUTMENT (WITHOUT CONCRETE WEARING COURSE)

DES: DR: CHK: CHK:

SHEET NO. OF SHEETS

APPROVED:

FIG. 5-397.147(A)

BRIDGE NO.

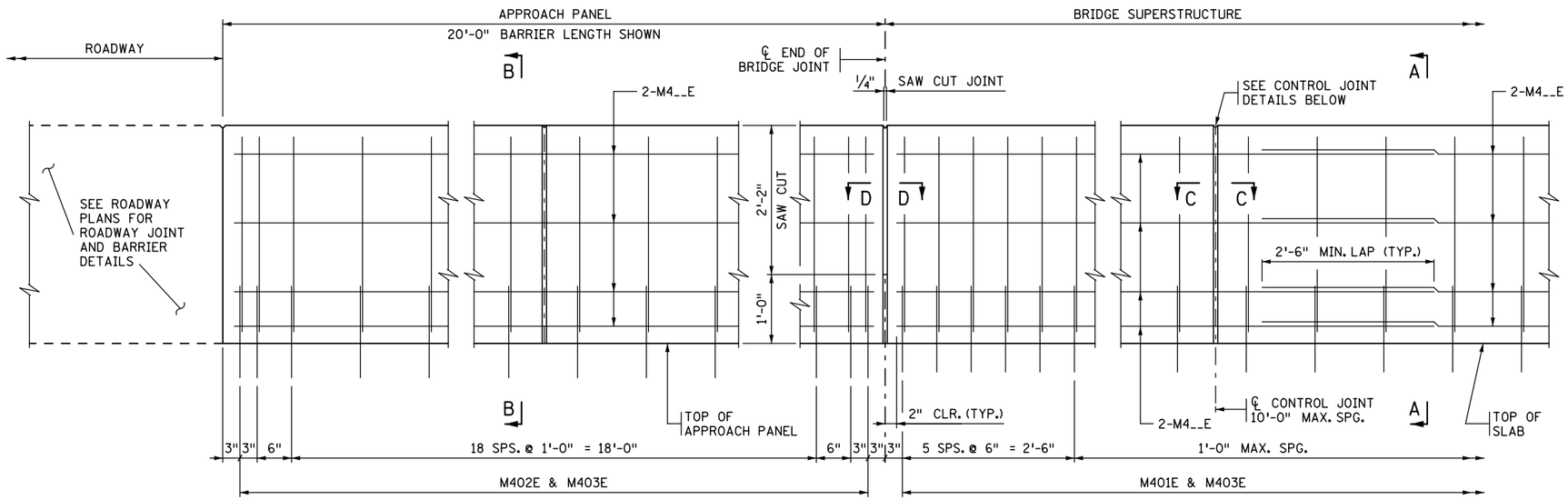

JOINT AT ABUTMENT

(INTEGRAL OR SEMI-INTEGRAL ABUTMENT)

CONTROL JOINT

INSIDE ELEVATION OF BARRIER

CONCRETE WEARING COURSE NOT SHOWN

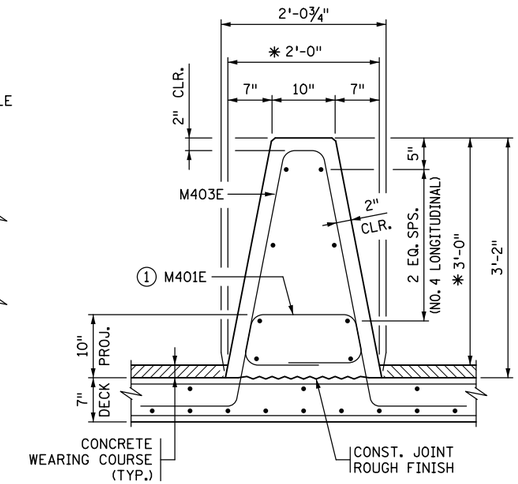

SECTION A-A

✱ DIMENSION SHOWN IS TO THE TOP OF THE WEARING COURSE AT GUTTERLINE.

DESIGNER NOTE
(REMOVE PRIOR TO PLOTTING FINAL PLAN):
VERIFY LENGTH OF BARRIER ON APPROACH PANEL WITH ROADWAY DESIGNER. REFER TO MEMO TO DESIGNERS (2016-01) FOR ADDITIONAL REQUIREMENTS REGARDING BARRIER PLACEMENT.

BARRIER MEETS NCHRP 350 TL-4 REQUIREMENTS ON BRIDGE DECK AND TL-3 ON APPROACH PANEL.

BILL OF REINFORCEMENT FOR BARRIER				
BAR	NO.	LENGTH	SHAPE	LOCATION
M401E		6'-5"		BARRIER DOWEL
M402E		6'-6"		BARRIER DOWEL
M403E		8'-5"		BARRIER VERTICAL
M4__E				BARRIER LONGITUDINAL
M4__E				BARRIER LONGITUDINAL
M4__E				BARRIER LONGITUDINAL
M4__E				BARRIER LONGITUDINAL
M4__E				BARRIER LONGITUDINAL

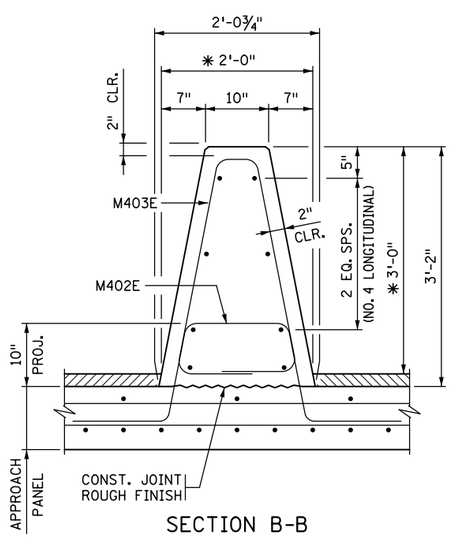

SECTION B-B

CONCRETE APPROACH PANEL.

✱ DIMENSION SHOWN IS TO THE TOP OF THE WEARING COURSE AT GUTTERLINE.

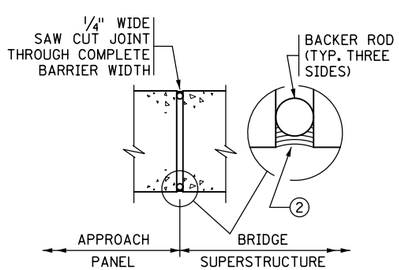

SECTION D-D

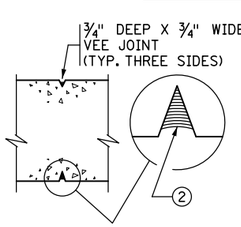

SECTION C-C

CAST-IN-PLACE CONSTRUCTION

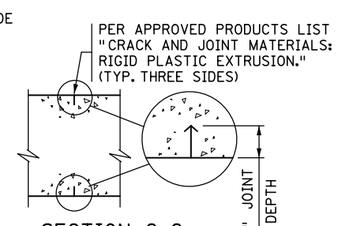

SECTION C-C

SLIPFORM CONSTRUCTION

CONTROL JOINT DETAILS

FOR SLIPFORM CONSTRUCTION: IMMEDIATELY AFTER CONCRETE IS PLACED AND WHILE IT IS STILL WET, CREATE A ONE INCH STRAIGHT GROOVE USING A TROWEL. INSERT RIGID PLASTIC EXTRUSION INTO GROOVE TO A DEPTH 1/8" BELOW THE SURFACE; FINISH OVER GROOVE COMPLETELY HIDING THE EXTRUSION.

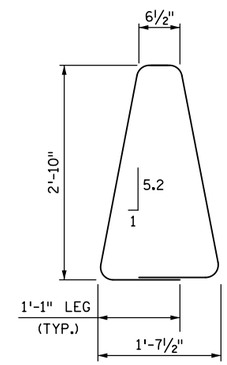

M403E

INCREASE M401E VERTICAL LEGS IF DECK SLAB THICKNESS IS GREATER THAN 9".

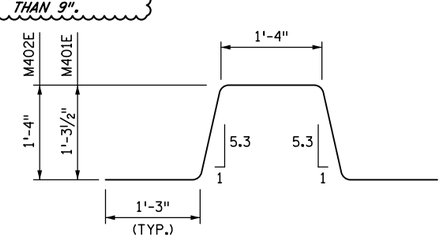

M401E & M402E

GENERAL NOTES

MEASURE PAYMENT LENGTH BETWEEN THE OUTSIDE ENDS OF THE BARRIER FROM THE E8 JOINT.

CONCRETE BARRIER = 688 LBS./FT. (0.170 CU. YDS/FT.)

FINISH ALL EDGES OF BARRIER WITH 1/2" CHAMFER EXCEPT WHERE OTHERWISE NOTED.

SPACE CONTROL JOINTS AT 10 FT. MAXIMUM. REFER TO SUPERSTRUCTURE SHEET FOR SPECIFIC SPACING INFORMATION.

BARRIER QUANTITIES ARE LISTED IN SUMMARY OF QUANTITIES FOR SUPERSTRUCTURE.

① PLACE BAR ON TOP OF BOTTOM REINFORCEMENT MAT IN DECK.

② JOINT SEALANT PER MnDOT APPROVED/QUALIFIED PRODUCTS LIST - CRACK AND JOINT MATERIALS - SILICONE JOINT SEALERS.

REVISION: MAY 10, 2017

APPROVED: AUGUST 24, 2016

Kevin Western

STATE BRIDGE ENGINEER

CERTIFIED BY _____ LICENSED PROFESSIONAL ENGINEER _____ DATE

NAME: LIC. NO.

TITLE: SOLID MEDIAN BARRIER 36" (TYPE S, TL-4)

INTEGRAL OR SEMI-INTEGRAL ABUTMENT (WITH 2" CONCRETE WEARING COURSE)

DES: DR: CHK: CHK:

SHEET NO. OF SHEETS

APPROVED:

FIG. 5-397.147(B)

BRIDGE NO.

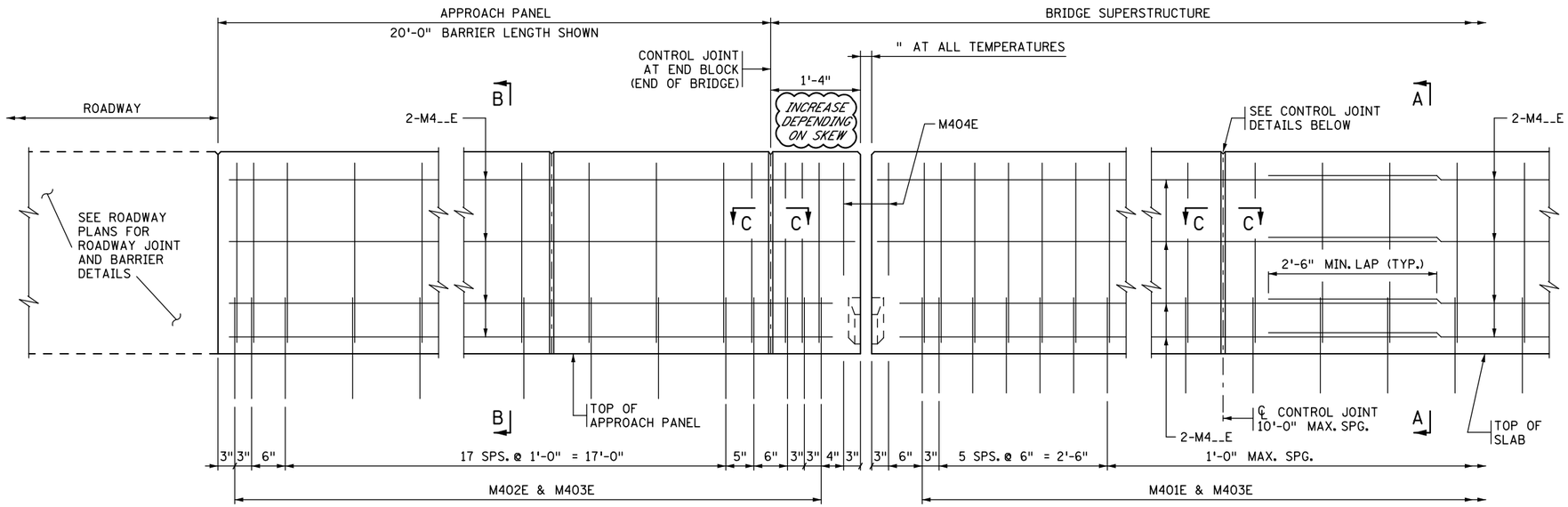

EXPANSION JOINT ③

EXPANSION DEVICE NOT SHOWN

CONTROL JOINT

INSIDE ELEVATION OF BARRIER

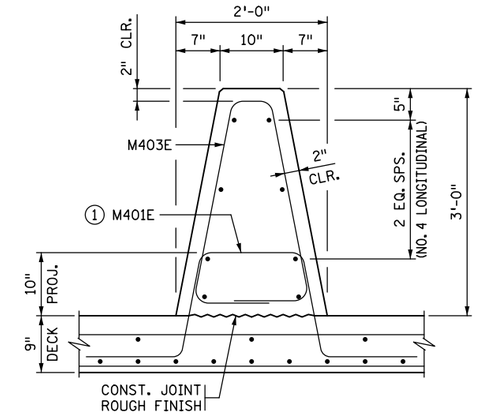

SECTION A-A

DESIGNER NOTE
(REMOVE PRIOR TO PLOTTING FINAL PLAN):
VERIFY LENGTH OF BARRIER ON APPROACH PANEL WITH ROADWAY DESIGNER. REFER TO MEMO TO DESIGNERS (2016-01) FOR ADDITIONAL REQUIREMENTS REGARDING BARRIER PLACEMENT.

BARRIER MEETS NCHRP 350 TL-4 REQUIREMENTS ON BRIDGE DECK AND TL-3 ON APPROACH PANEL.

BILL OF REINFORCEMENT FOR BARRIER				
BAR	NO.	LENGTH	SHAPE	LOCATION
M401E		6'-9"		BARRIER DOWEL
M402E		6'-10"		BARRIER DOWEL
M403E		8'-1"		BARRIER VERTICAL
M404E		5'-7"		BARRIER VERTICAL
M4__E				BARRIER LONGITUDINAL
M4__E				BARRIER LONGITUDINAL
M4__E				BARRIER LONGITUDINAL
M4__E				BARRIER LONGITUDINAL

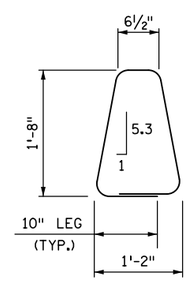

M404E

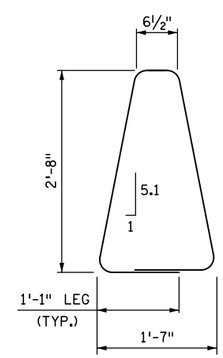

M403E

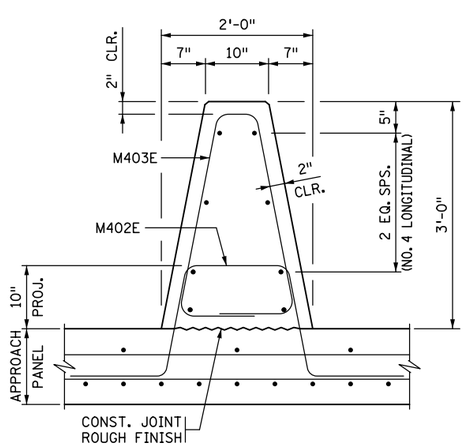

SECTION B-B

CONCRETE APPROACH PANEL

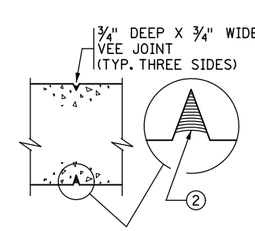

SECTION C-C

CAST-IN-PLACE CONSTRUCTION

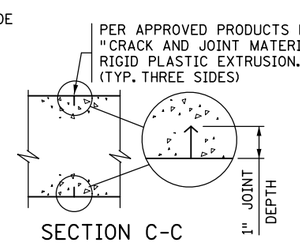

SECTION C-C

SLIPFORM CONSTRUCTION

CONTROL JOINT DETAILS

FOR SLIPFORM CONSTRUCTION: IMMEDIATELY AFTER CONCRETE IS PLACED AND WHILE IT IS STILL WET, CREATE A ONE INCH STRAIGHT GROOVE USING A TROWEL. INSERT RIGID PLASTIC EXTRUSION INTO GROOVE TO A DEPTH ⅛" BELOW THE SURFACE; FINISH OVER GROOVE COMPLETELY HIDING THE EXTRUSION.

INCREASE M401E VERTICAL LEGS IF DECK SLAB THICKNESS IS GREATER THAN 9".

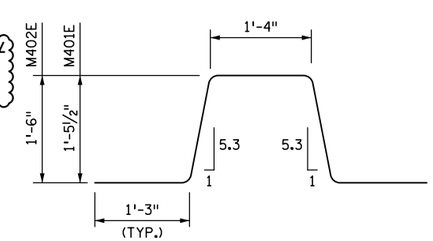

M401E & M402E

GENERAL NOTES

MEASURE PAYMENT LENGTH BETWEEN THE OUTSIDE ENDS OF THE BARRIER FROM THE E8 JOINT.

CONCRETE BARRIER = 638 LBS./FT. (0.157 CU. YDS/FT.)

FINISH ALL EDGES OF BARRIER WITH ½" CHAMFER EXCEPT WHERE OTHERWISE NOTED.

SPACE CONTROL JOINTS AT 10 FT. MAXIMUM. REFER TO SUPERSTRUCTURE SHEET FOR SPECIFIC SPACING INFORMATION.

BARRIER QUANTITIES ARE LISTED IN SUMMARY OF QUANTITIES FOR SUPERSTRUCTURE.

① PLACE BAR ON TOP OF BOTTOM REINFORCEMENT MAT IN DECK.

② JOINT SEALANT PER MnDOT APPROVED/QUALIFIED PRODUCTS LIST - CRACK AND JOINT MATERIALS - SILICONE JOINT SEALERS.

③ REFER TO "WATERPROOF EXPANSION DEVICE" STANDARD PLANS FOR COVER PLATE DETAILS.

REVISION: MAY 10, 2017

APPROVED: AUGUST 24, 2016
Kevin Western
STATE BRIDGE ENGINEER

CERTIFIED BY _____ LICENSED PROFESSIONAL ENGINEER _____ DATE

NAME: LIC. NO.

TITLE: SOLID MEDIAN BARRIER 36" (TYPE S, TL-4)
PARAPET ABUTMENT
(WITHOUT CONCRETE WEARING COURSE)

DES: DR: CHK: CHK:

SHEET NO. OF SHEETS

FIG. 5-397.147(C)

APPROVED:

BRIDGE NO.

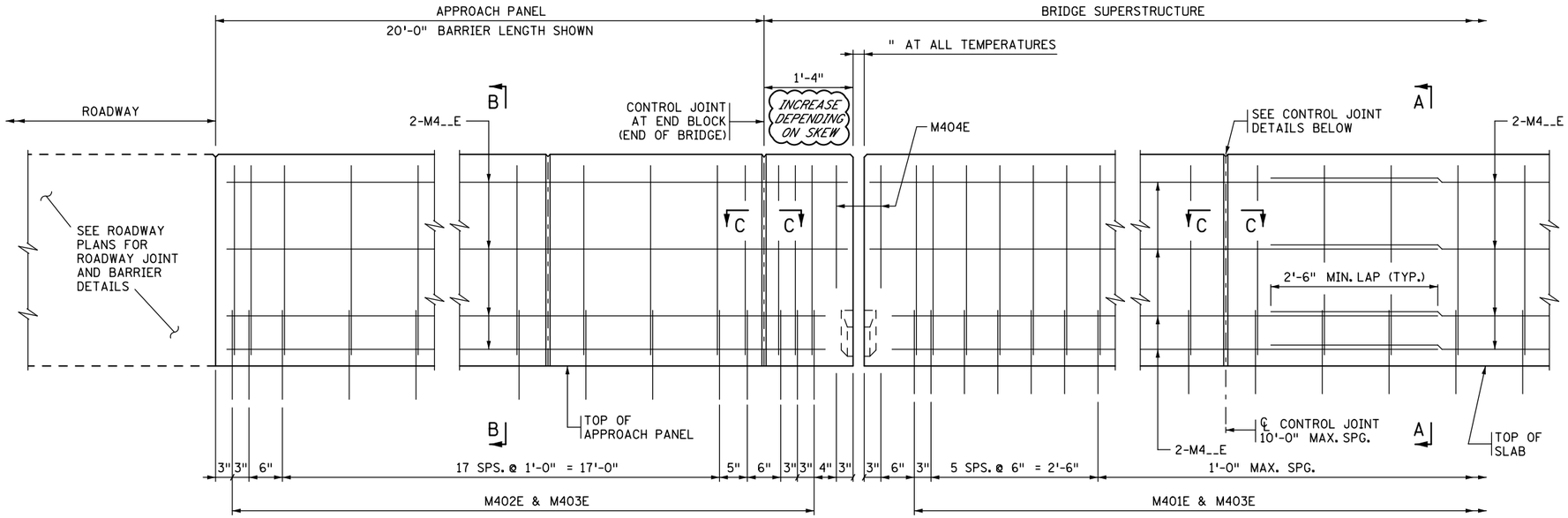

EXPANSION JOINT ③

EXPANSION DEVICE NOT SHOWN

CONTROL JOINT

INSIDE ELEVATION OF BARRIER

CONCRETE WEARING COURSE NOT SHOWN

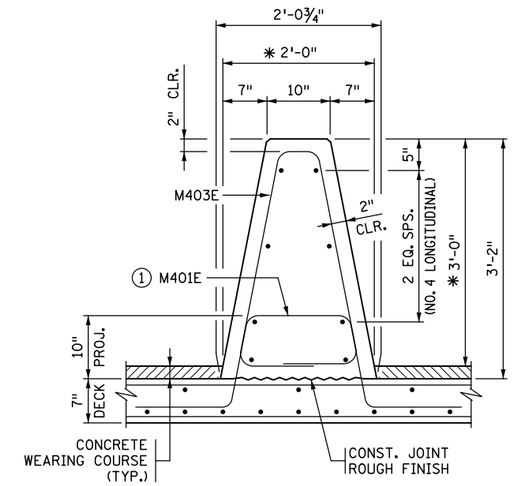

SECTION A-A

✱ DIMENSION SHOWN IS TO THE TOP OF THE WEARING COURSE AT GUTTERLINE.

DESIGNER NOTE
(REMOVE PRIOR TO PLOTTING FINAL PLAN):
VERIFY LENGTH OF BARRIER ON APPROACH PANEL WITH ROADWAY DESIGNER. REFER TO MEMO TO DESIGNERS (2016-01) FOR ADDITIONAL REQUIREMENTS REGARDING BARRIER PLACEMENT.

BARRIER MEETS NCHRP 350 TL-4 REQUIREMENTS ON BRIDGE DECK AND TL-3 ON APPROACH PANEL.

BILL OF REINFORCEMENT FOR BARRIER				
BAR	NO.	LENGTH	SHAPE	LOCATION
M401E		6'-5"		BARRIER DOWEL
M402E		6'-6"		BARRIER DOWEL
M403E		8'-5"		BARRIER VERTICAL
M404E		6'-1"		BARRIER VERTICAL
M4__E				BARRIER LONGITUDINAL
M4__E				BARRIER LONGITUDINAL
M4__E				BARRIER LONGITUDINAL
M4__E				BARRIER LONGITUDINAL

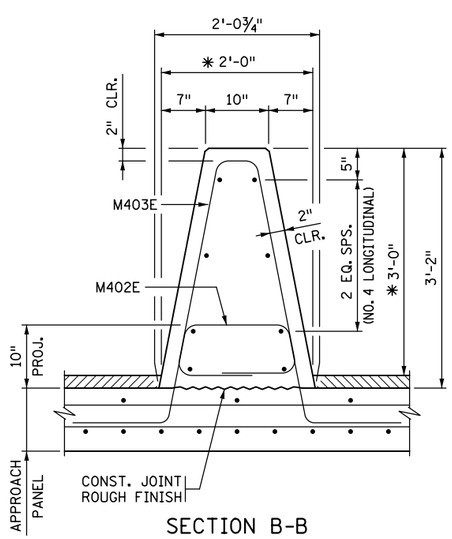

SECTION B-B

CONCRETE APPROACH PANEL.

✱ DIMENSION SHOWN IS TO THE TOP OF THE WEARING COURSE AT GUTTERLINE.

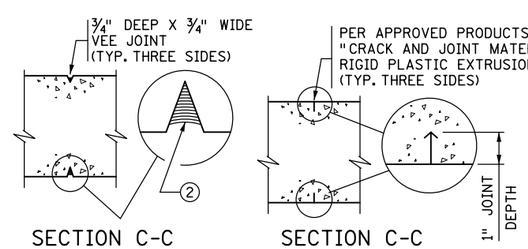

SECTION C-C

CAST-IN-PLACE CONSTRUCTION

SECTION C-C

SLIPFORM CONSTRUCTION

CONTROL JOINT DETAILS

FOR SLIPFORM CONSTRUCTION: IMMEDIATELY AFTER CONCRETE IS PLACED AND WHILE IT IS STILL WET, CREATE A ONE INCH STRAIGHT GROOVE USING A TROWEL. INSERT RIGID PLASTIC EXTRUSION INTO GROOVE TO A DEPTH ⅛" BELOW THE SURFACE; FINISH OVER GROOVE COMPLETELY HIDING THE EXTRUSION.

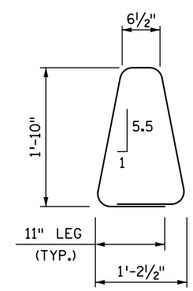

M404E

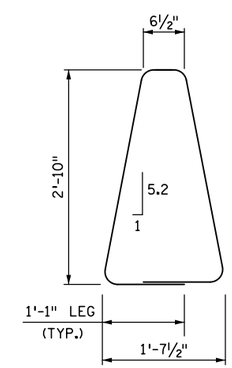

M403E

INCREASE M401E VERTICAL LEGS IF DECK SLAB THICKNESS IS GREATER THAN 9".

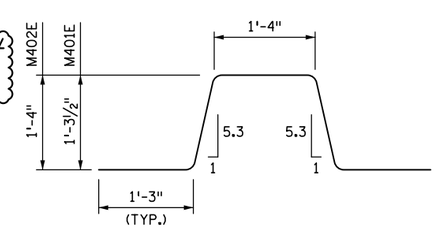

M401E & M402E

GENERAL NOTES

MEASURE PAYMENT LENGTH BETWEEN THE OUTSIDE ENDS OF THE BARRIER FROM THE E8 JOINT.

CONCRETE BARRIER = 688 LBS./FT. (0.170 CU. YDS/FT.)

FINISH ALL EDGES OF BARRIER WITH ½" CHAMFER EXCEPT WHERE OTHERWISE NOTED.

SPACE CONTROL JOINTS AT 10 FT. MAXIMUM. REFER TO SUPERSTRUCTURE SHEET FOR SPECIFIC SPACING INFORMATION.

BARRIER QUANTITIES ARE LISTED IN SUMMARY OF QUANTITIES FOR SUPERSTRUCTURE.

① PLACE BAR ON TOP OF BOTTOM REINFORCEMENT MAT IN DECK.

② JOINT SEALANT PER MnDOT APPROVED/QUALIFIED PRODUCTS LIST- CRACK AND JOINT MATERIALS -SILICONE JOINT SEALERS.

③ REFER TO "WATERPROOF EXPANSION DEVICE" STANDARD PLANS FOR COVER PLATE DETAILS.

REVISION: MAY 10, 2017

APPROVED: AUGUST 24, 2016

Kevin Western

STATE BRIDGE ENGINEER

CERTIFIED BY _____ LICENSED PROFESSIONAL ENGINEER _____ DATE

NAME: LIC. NO.

TITLE: SOLID MEDIAN BARRIER 36" (TYPE S, TL-4) PARAPET ABUTMENT (WITH 2" CONCRETE WEARING COURSE)

DES: DR: CHK: CHK:

SHEET NO. OF SHEETS

APPROVED:

FIG. 5-397.147(D)

BRIDGE NO.

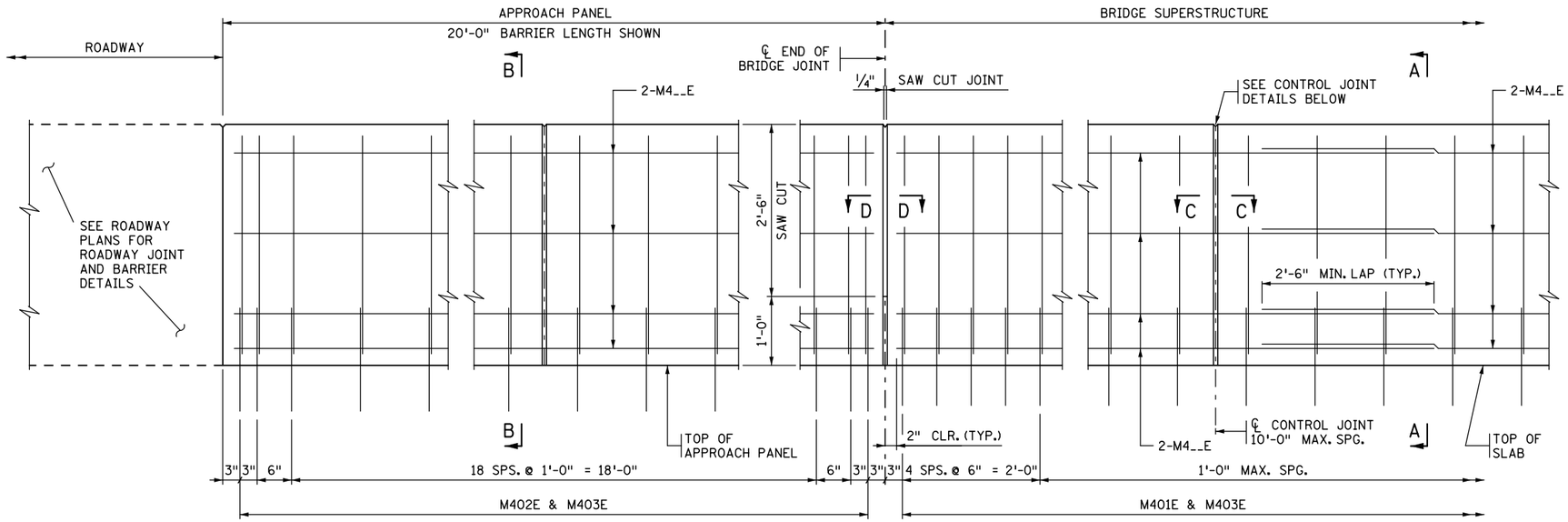

JOINT AT ABUTMENT

(INTEGRAL OR SEMI-INTEGRAL ABUTMENT)

CONTROL JOINT

INSIDE ELEVATION OF BARRIER

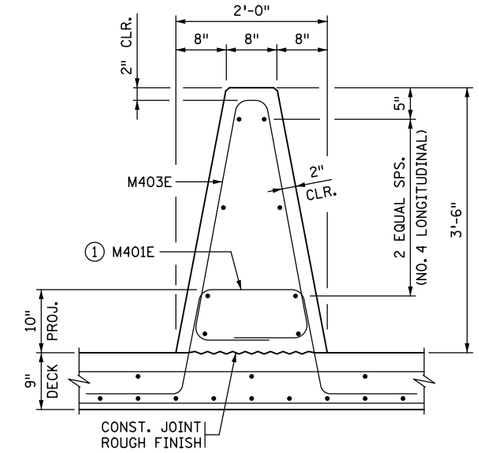

SECTION A-A

DESIGNER NOTE
(REMOVE PRIOR TO PLOTTING FINAL PLAN):
VERIFY LENGTH OF BARRIER ON APPROACH PANEL WITH ROADWAY DESIGNER. REFER TO MEMO TO DESIGNERS (2016-01) FOR ADDITIONAL REQUIREMENTS REGARDING BARRIER PLACEMENT.

BARRIER MEETS NCHRP 350 TL-4 REQUIREMENTS ON BRIDGE DECK AND TL-3 ON APPROACH PANEL.

BILL OF REINFORCEMENT FOR BARRIER				
BAR	NO.	LENGTH	SHAPE	LOCATION
M401E		6'-9"		BARRIER DOWEL
M402E		6'-10"		BARRIER DOWEL
M403E		8'-11"		BARRIER VERTICAL
M4__E				BARRIER LONGITUDINAL
M4__E				BARRIER LONGITUDINAL
M4__E				BARRIER LONGITUDINAL
M4__E				BARRIER LONGITUDINAL
M4__E				BARRIER LONGITUDINAL

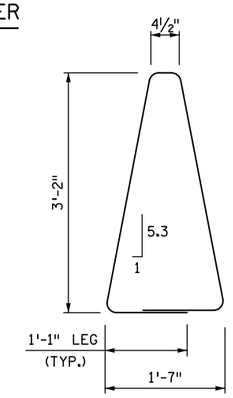

M403E

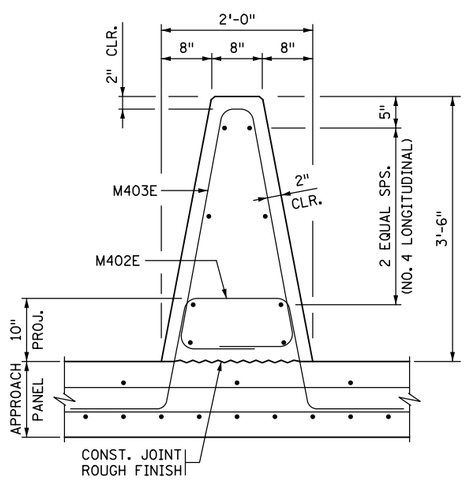

SECTION B-B

CONCRETE APPROACH PANEL

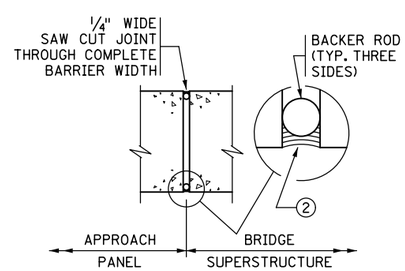

SECTION D-D

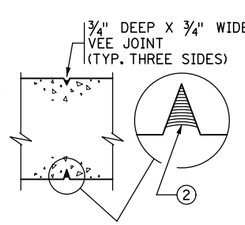

SECTION C-C

CAST-IN-PLACE CONSTRUCTION

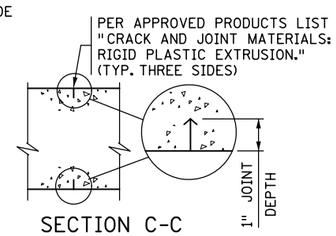

SECTION C-C

SLIPFORM CONSTRUCTION

CONTROL JOINT DETAILS

FOR SLIPFORM CONSTRUCTION: IMMEDIATELY AFTER CONCRETE IS PLACED AND WHILE IT IS STILL WET, CREATE A ONE INCH STRAIGHT GROOVE USING A TROWEL. INSERT RIGID PLASTIC EXTRUSION INTO GROOVE TO A DEPTH 1/8" BELOW THE SURFACE; FINISH OVER GROOVE COMPLETELY HIDING THE EXTRUSION.

INCREASE M401E VERTICAL LEGS IF DECK SLAB THICKNESS IS GREATER THAN 9".

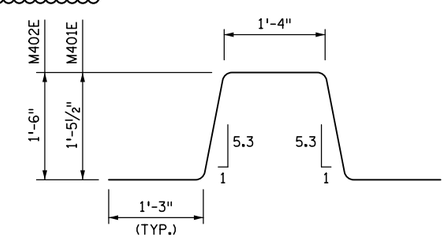

M401E & M402E

GENERAL NOTES

MEASURE PAYMENT LENGTH BETWEEN THE OUTSIDE ENDS OF THE BARRIER FROM THE E8 JOINT.

CONCRETE BARRIER = 700 LBS./FT. (0.173 CU. YDS/FT.)

FINISH ALL EDGES OF BARRIER WITH 1/2" CHAMFER EXCEPT WHERE OTHERWISE NOTED.

SPACE CONTROL JOINTS AT 10 FT. MAXIMUM. REFER TO SUPERSTRUCTURE SHEET FOR SPECIFIC SPACING INFORMATION.

BARRIER QUANTITIES ARE LISTED IN SUMMARY OF QUANTITIES FOR SUPERSTRUCTURE.

1 PLACE BAR ON TOP OF BOTTOM REINFORCEMENT MAT IN DECK.

2 JOINT SEALANT PER MnDOT APPROVED/QUALIFIED PRODUCTS LIST - CRACK AND JOINT MATERIALS - SILICONE JOINT SEALERS.

REVISION: MAY 10, 2017

APPROVED: AUGUST 24, 2016

Kevin Western

STATE BRIDGE ENGINEER

CERTIFIED BY _____ LICENSED PROFESSIONAL ENGINEER _____ DATE

NAME: LIC. NO.

TITLE: SOLID MEDIAN BARRIER 42" (TYPE S, TL-4)

INTEGRAL OR SEMI-INTEGRAL ABUTMENT (WITHOUT CONCRETE WEARING COURSE)

DES: DR: CHK: CHK:

SHEET NO. OF SHEETS

APPROVED:

FIG. 5-397.148(A)

BRIDGE NO.

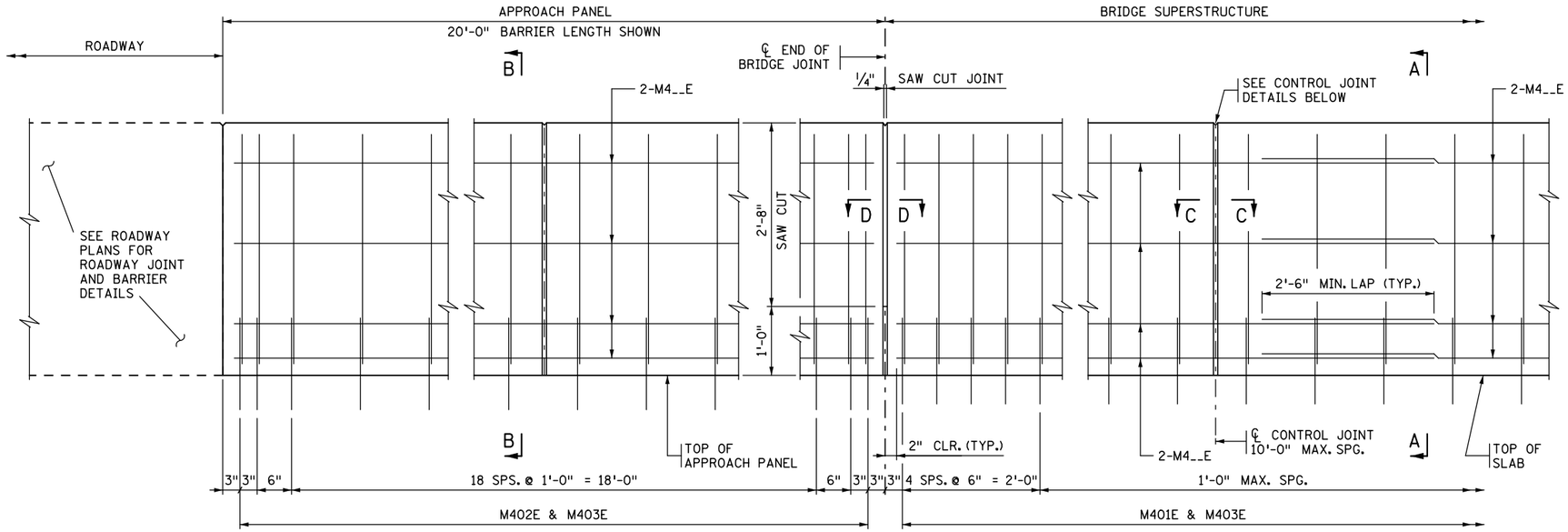

JOINT AT ABUTMENT ③

(INTEGRAL OR SEMI-INTEGRAL ABUTMENT)

CONTROL JOINT

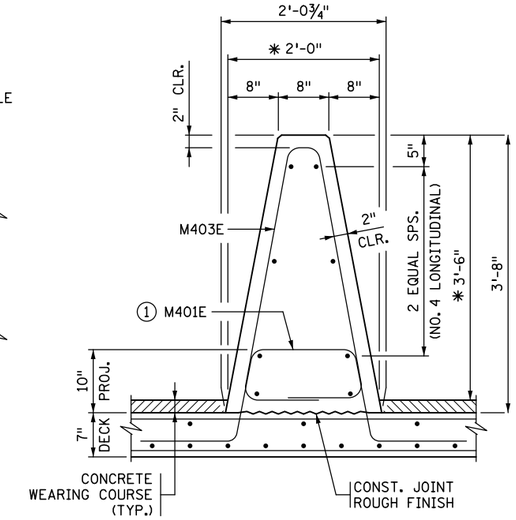

SECTION A-A

✱ DIMENSION SHOWN IS TO THE TOP OF THE WEARING COURSE AT GUTTERLINE.

DESIGNER NOTE
(REMOVE PRIOR TO PLOTTING FINAL PLAN):
VERIFY LENGTH OF BARRIER ON APPROACH PANEL WITH ROADWAY DESIGNER. REFER TO MEMO TO DESIGNERS (2016-01) FOR ADDITIONAL REQUIREMENTS REGARDING BARRIER PLACEMENT.

INSIDE ELEVATION OF BARRIER

CONCRETE WEARING COURSE NOT SHOWN

BARRIER MEETS NCHRP 350 TL-4 REQUIREMENTS ON BRIDGE DECK AND TL-3 ON APPROACH PANEL.

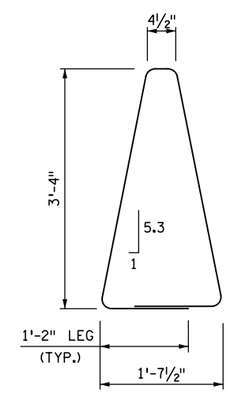

M403E

BILL OF REINFORCEMENT FOR BARRIER				
BAR	NO.	LENGTH	SHAPE	LOCATION
M401E		6'-5"		BARRIER DOWEL
M402E		6'-6"		BARRIER DOWEL
M403E		9'-5"		BARRIER VERTICAL
M4__E				BARRIER LONGITUDINAL
M4__E				BARRIER LONGITUDINAL
M4__E				BARRIER LONGITUDINAL
M4__E				BARRIER LONGITUDINAL
M4__E				BARRIER LONGITUDINAL

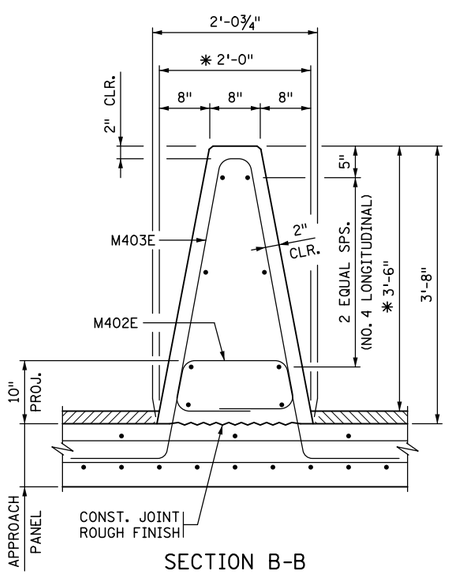

SECTION B-B

CONCRETE APPROACH PANEL.

✱ DIMENSION SHOWN IS TO THE TOP OF THE WEARING COURSE AT GUTTERLINE.

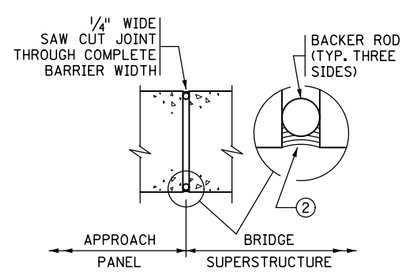

SECTION D-D

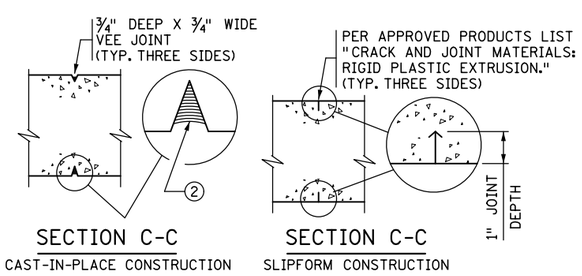

SECTION C-C

CAST-IN-PLACE CONSTRUCTION

SECTION C-C

SLIPFORM CONSTRUCTION

CONTROL JOINT DETAILS

FOR SLIPFORM CONSTRUCTION: IMMEDIATELY AFTER CONCRETE IS PLACED AND WHILE IT IS STILL WET, CREATE A ONE INCH STRAIGHT GROOVE USING A TROWEL. INSERT RIGID PLASTIC EXTRUSION INTO GROOVE TO A DEPTH ⅛" BELOW THE SURFACE; FINISH OVER GROOVE COMPLETELY HIDING THE EXTRUSION.

INCREASE M401E VERTICAL LEGS IF DECK SLAB THICKNESS IS GREATER THAN 9".

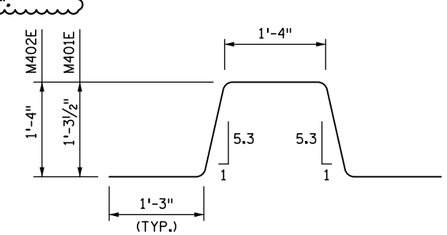

M401E & M402E

GENERAL NOTES

MEASURE PAYMENT LENGTH BETWEEN THE OUTSIDE ENDS OF THE BARRIER FROM THE E8 JOINT.

CONCRETE BARRIER = 751 LBS./FT. (0.185 CU. YDS/FT.)

FINISH ALL EDGES OF BARRIER WITH ½" CHAMFER EXCEPT WHERE OTHERWISE NOTED.

SPACE CONTROL JOINTS AT 10 FT. MAXIMUM. REFER TO SUPERSTRUCTURE SHEET FOR SPECIFIC SPACING INFORMATION.

BARRIER QUANTITIES ARE LISTED IN SUMMARY OF QUANTITIES FOR SUPERSTRUCTURE.

① PLACE BAR ON TOP OF BOTTOM REINFORCEMENT MAT IN DECK.

② JOINT SEALANT PER MnDOT APPROVED/QUALIFIED PRODUCTS LIST - CRACK AND JOINT MATERIALS - SILICONE JOINT SEALERS.

REVISION: MAY 10, 2017

APPROVED: AUGUST 24, 2016

Kevin Western

STATE BRIDGE ENGINEER

CERTIFIED BY _____ LICENSED PROFESSIONAL ENGINEER _____ DATE

NAME: LIC. NO.

TITLE: SOLID MEDIAN BARRIER 42" (TYPE S, TL-4)

INTEGRAL OR SEMI-INTEGRAL ABUTMENT (WITH 2" CONCRETE WEARING COURSE)

DES: DR: CHK: CHK:

SHEET NO. OF SHEETS

APPROVED:

FIG. 5-397.148(B)

BRIDGE NO.

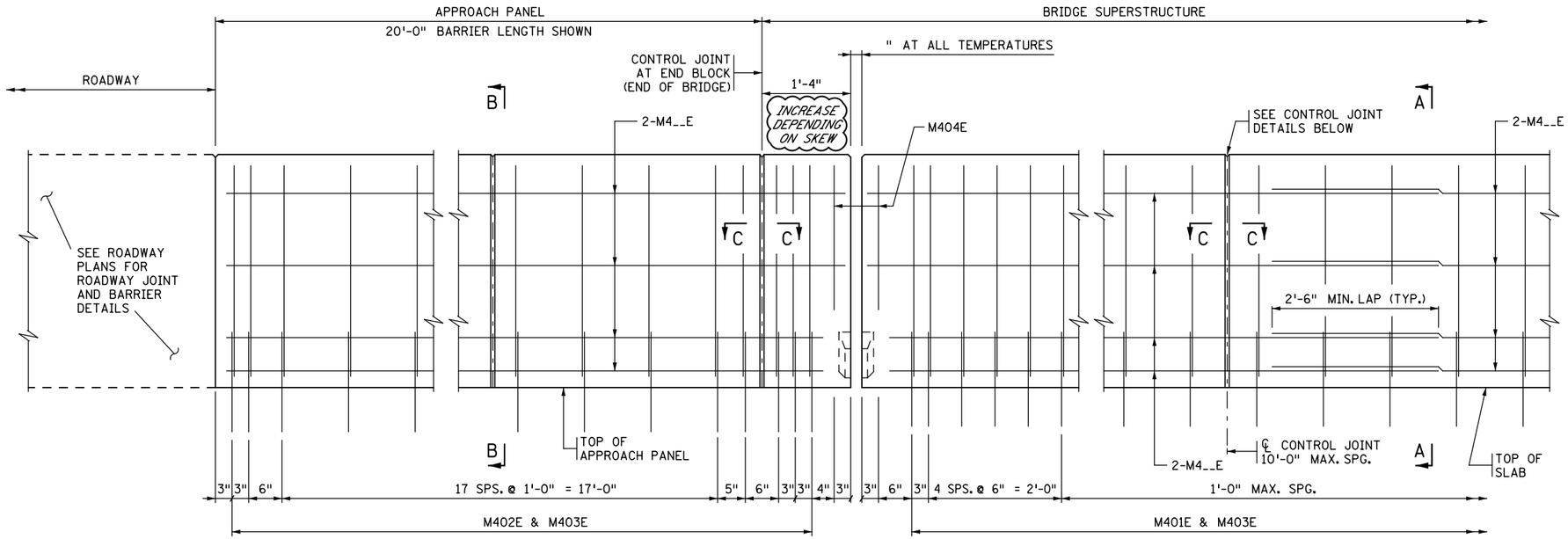

EXPANSION JOINT ③

EXPANSION DEVICE NOT SHOWN

CONTROL JOINT

INSIDE ELEVATION OF BARRIER

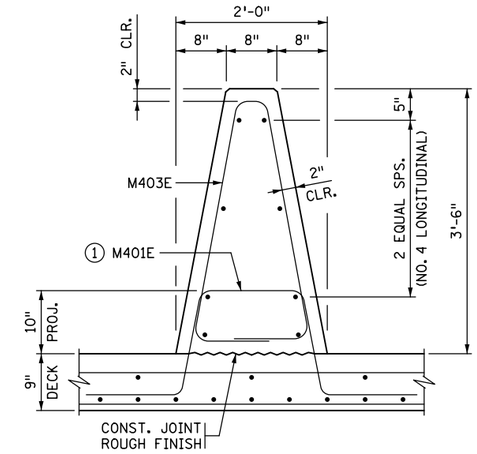

SECTION A-A

DESIGNER NOTE
(REMOVE PRIOR TO PLOTTING FINAL PLAN):
VERIFY LENGTH OF BARRIER ON APPROACH PANEL WITH ROADWAY DESIGNER. REFER TO MEMO TO DESIGNERS (2016-01) FOR ADDITIONAL REQUIREMENTS REGARDING BARRIER PLACEMENT.

BARRIER MEETS NCHRP 350 TL-4 REQUIREMENTS ON BRIDGE DECK AND TL-3 ON APPROACH PANEL.

BILL OF REINFORCEMENT FOR BARRIER

BAR	NO.	LENGTH	SHAPE	LOCATION
M401E		6'-9"		BARRIER DOWEL
M402E		6'-10"		BARRIER DOWEL
M403E		8'-11"		BARRIER VERTICAL
M404E		6'-5"		BARRIER VERTICAL
M4__E				BARRIER LONGITUDINAL
M4__E				BARRIER LONGITUDINAL
M4__E				BARRIER LONGITUDINAL
M4__E				BARRIER LONGITUDINAL

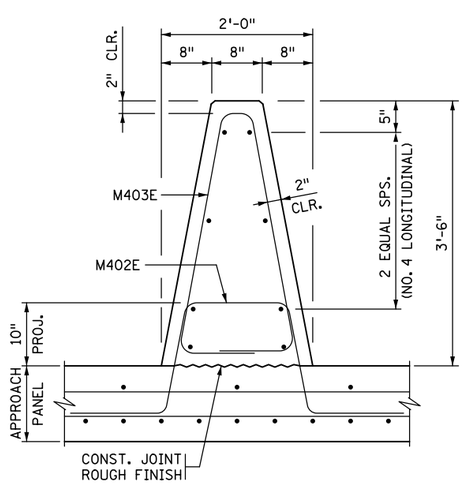

SECTION B-B

CONCRETE APPROACH PANEL

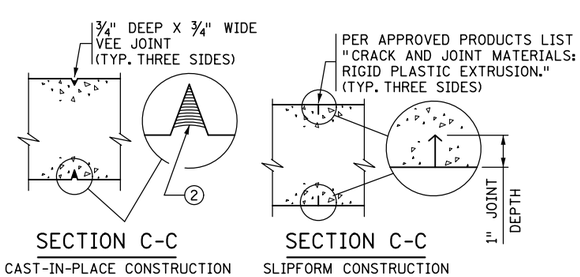

SECTION C-C

CAST-IN-PLACE CONSTRUCTION

SECTION C-C

SLIPFORM CONSTRUCTION

CONTROL JOINT DETAILS

FOR SLIPFORM CONSTRUCTION: IMMEDIATELY AFTER CONCRETE IS PLACED AND WHILE IT IS STILL WET, CREATE A ONE INCH STRAIGHT GROOVE USING A TROWEL. INSERT RIGID PLASTIC EXTRUSION INTO GROOVE TO A DEPTH ⅛" BELOW THE SURFACE; FINISH OVER GROOVE COMPLETELY HIDING THE EXTRUSION.

M404E

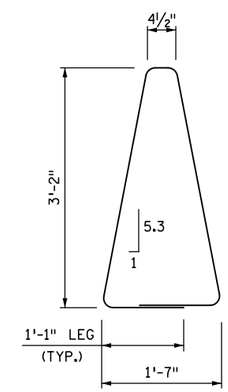

M403E

INCREASE M401E VERTICAL LEGS IF DECK SLAB THICKNESS IS GREATER THAN 9".

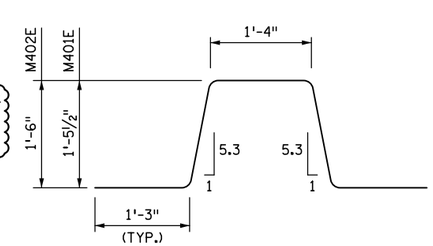

M401E & M402E

GENERAL NOTES

MEASURE PAYMENT LENGTH BETWEEN THE OUTSIDE ENDS OF THE BARRIER FROM THE E8 JOINT.

CONCRETE BARRIER = 700 LBS./FT. (0.173 CU. YDS/FT.)

FINISH ALL EDGES OF BARRIER WITH ½" CHAMFER EXCEPT WHERE OTHERWISE NOTED.

SPACE CONTROL JOINTS AT 10 FT. MAXIMUM. REFER TO SUPERSTRUCTURE SHEET FOR SPECIFIC SPACING INFORMATION.

BARRIER QUANTITIES ARE LISTED IN SUMMARY OF QUANTITIES FOR SUPERSTRUCTURE.

① PLACE BAR ON TOP OF BOTTOM REINFORCEMENT MAT IN DECK.

② JOINT SEALANT PER MnDOT APPROVED/QUALIFIED PRODUCTS LIST - CRACK AND JOINT MATERIALS - SILICONE JOINT SEALERS.

③ REFER TO "WATERPROOF EXPANSION DEVICE" STANDARD PLANS FOR COVER PLATE DETAILS.

REVISION: MAY 10, 2017

APPROVED: AUGUST 24, 2016

Kevin Western

STATE BRIDGE ENGINEER

CERTIFIED BY _____ LICENSED PROFESSIONAL ENGINEER _____ DATE

NAME: LIC. NO.

TITLE: SOLID MEDIAN BARRIER 42" (TYPE S, TL-4)
PARAPET ABUTMENT
(WITHOUT CONCRETE WEARING COURSE)

DES: DR: CHK: CHK:

SHEET NO. OF SHEETS

APPROVED:

FIG. 5-397.148(C)

BRIDGE NO.

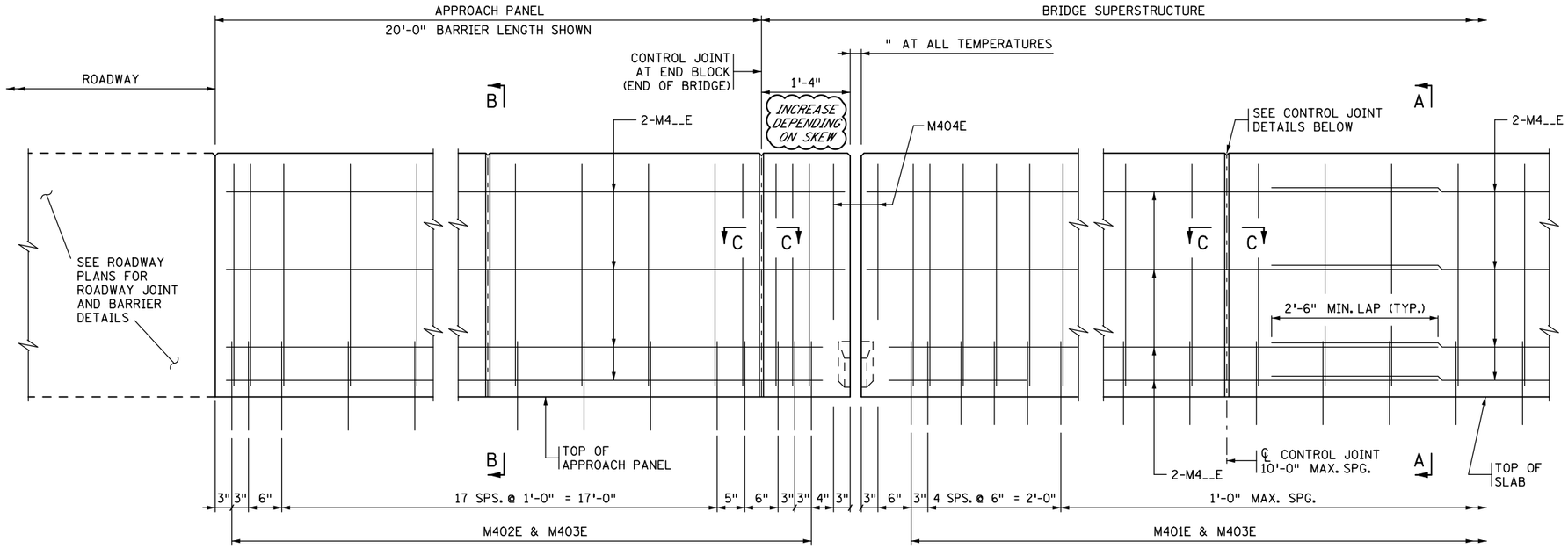

EXPANSION JOINT ③

EXPANSION DEVICE NOT SHOWN

CONTROL JOINT

INSIDE ELEVATION OF BARRIER

CONCRETE WEARING COURSE NOT SHOWN

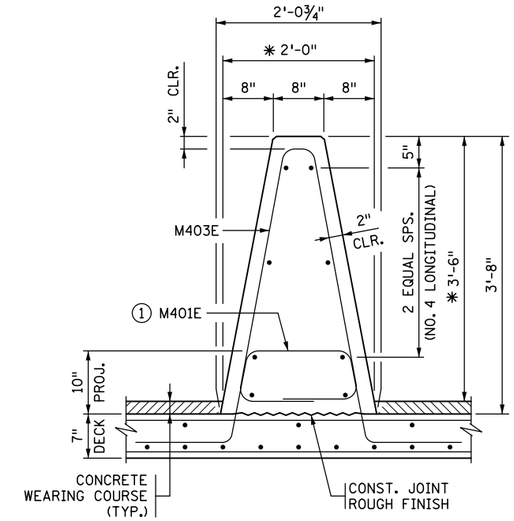

SECTION A-A

✱ DIMENSION SHOWN IS TO THE TOP OF THE WEARING COURSE AT GUTTERLINE.

DESIGNER NOTE
(REMOVE PRIOR TO PLOTTING FINAL PLAN):
VERIFY LENGTH OF BARRIER ON APPROACH PANEL WITH ROADWAY DESIGNER. REFER TO MEMO TO DESIGNERS (2016-01) FOR ADDITIONAL REQUIREMENTS REGARDING BARRIER PLACEMENT.

BARRIER MEETS NCHRP 350 TL-4 REQUIREMENTS ON BRIDGE DECK AND TL-3 ON APPROACH PANEL.

BILL OF REINFORCEMENT FOR BARRIER

BAR	NO.	LENGTH	SHAPE	LOCATION
M401E		6'-5"		BARRIER DOWEL
M402E		6'-6"		BARRIER DOWEL
M403E		9'-5"		BARRIER VERTICAL
M404E		6'-11"		BARRIER VERTICAL
M4__E				BARRIER LONGITUDINAL
M4__E				BARRIER LONGITUDINAL
M4__E				BARRIER LONGITUDINAL
M4__E				BARRIER LONGITUDINAL

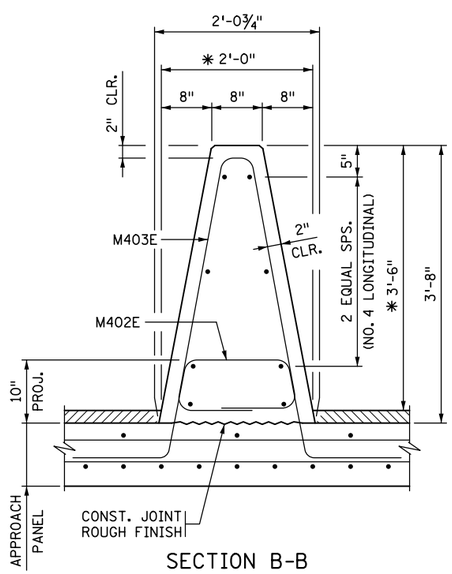

SECTION B-B

CONCRETE APPROACH PANEL.

✱ DIMENSION SHOWN IS TO THE TOP OF THE WEARING COURSE AT GUTTERLINE.

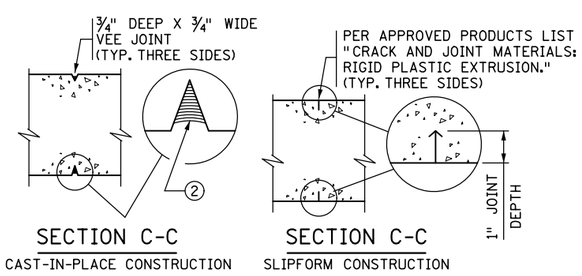

SECTION C-C

CAST-IN-PLACE CONSTRUCTION

SECTION C-C

SLIPFORM CONSTRUCTION

CONTROL JOINT DETAILS

FOR SLIPFORM CONSTRUCTION: IMMEDIATELY AFTER CONCRETE IS PLACED AND WHILE IT IS STILL WET, CREATE A ONE INCH STRAIGHT GROOVE USING A TROWEL. INSERT RIGID PLASTIC EXTRUSION INTO GROOVE TO A DEPTH ⅛" BELOW THE SURFACE; FINISH OVER GROOVE COMPLETELY HIDING THE EXTRUSION.

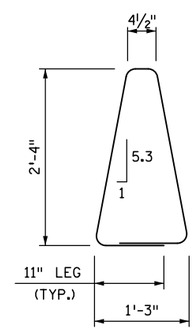

M404E

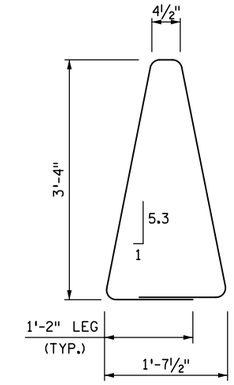

M403E

INCREASE M401E VERTICAL LEGS IF DECK SLAB THICKNESS IS GREATER THAN 9".

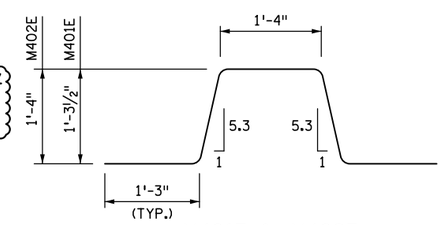

M401E & M402E

GENERAL NOTES

MEASURE PAYMENT LENGTH BETWEEN THE OUTSIDE ENDS OF THE BARRIER FROM THE E8 JOINT.

CONCRETE BARRIER = 751 LBS./FT. (0.185 CU. YDS/FT.)

FINISH ALL EDGES OF BARRIER WITH ½" CHAMFER EXCEPT WHERE OTHERWISE NOTED.

SPACE CONTROL JOINTS AT 10 FT. MAXIMUM. REFER TO SUPERSTRUCTURE SHEET FOR SPECIFIC SPACING INFORMATION.

BARRIER QUANTITIES ARE LISTED IN SUMMARY OF QUANTITIES FOR SUPERSTRUCTURE.

① PLACE BAR ON TOP OF BOTTOM REINFORCEMENT MAT IN DECK.

② JOINT SEALANT PER MnDOT APPROVED/QUALIFIED PRODUCTS LIST - CRACK AND JOINT MATERIALS - SILICONE JOINT SEALERS.

③ REFER TO "WATERPROOF EXPANSION DEVICE" STANDARD PLANS FOR COVER PLATE DETAILS.

REVISION: MAY 10, 2017

APPROVED: AUGUST 24, 2016

Kevin Western

STATE BRIDGE ENGINEER

CERTIFIED BY _____ LICENSED PROFESSIONAL ENGINEER _____ DATE

NAME: LIC. NO.

TITLE: SOLID MEDIAN BARRIER 42" (TYPE S, TL-4) PARAPET ABUTMENT (WITH 2" CONCRETE WEARING COURSE)

DES: DR: CHK: CHK:

APPROVED:

SHEET NO. OF SHEETS

FIG. 5-397.148(D)

BRIDGE NO.

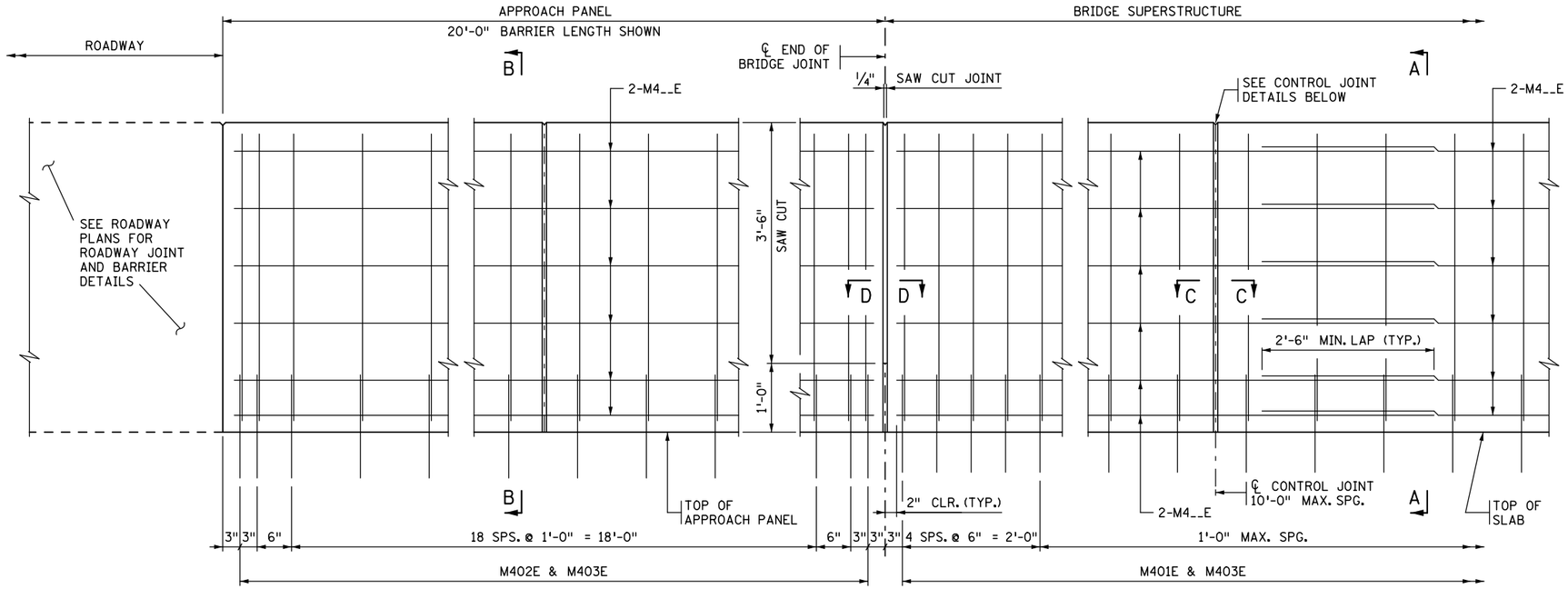

JOINT AT ABUTMENT

(INTEGRAL OR SEMI-INTEGRAL ABUTMENT)

CONTROL JOINT

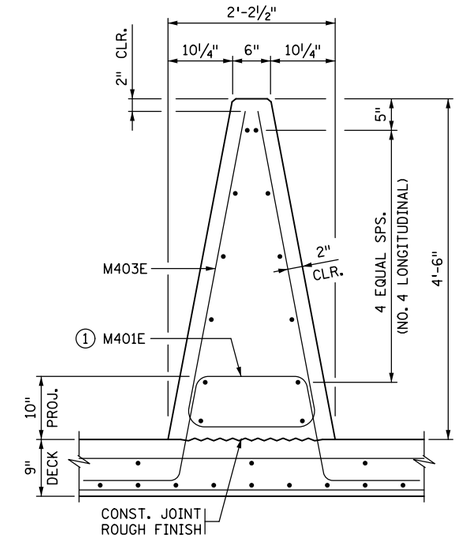

SECTION A-A

DESIGNER NOTE
(REMOVE PRIOR TO PLOTTING FINAL PLAN):
VERIFY LENGTH OF BARRIER ON APPROACH PANEL WITH ROADWAY DESIGNER. REFER TO MEMO TO DESIGNERS (2016-01) FOR ADDITIONAL REQUIREMENTS REGARDING BARRIER PLACEMENT.

INSIDE ELEVATION OF BARRIER

BARRIER MEETS NCHRP 350 TL-4 REQUIREMENTS ON BRIDGE DECK AND TL-3 ON APPROACH PANEL.

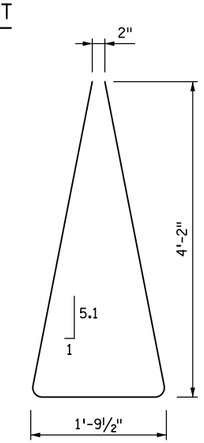

M403E

BILL OF REINFORCEMENT FOR BARRIER				
BAR	NO.	LENGTH	SHAPE	LOCATION
M401E		7'-0"		BARRIER DOWEL
M402E		7'-1"		BARRIER DOWEL
M403E		10'-2"		BARRIER VERTICAL
M4__E				BARRIER LONGITUDINAL
M4__E				BARRIER LONGITUDINAL
M4__E				BARRIER LONGITUDINAL
M4__E				BARRIER LONGITUDINAL
M4__E				BARRIER LONGITUDINAL

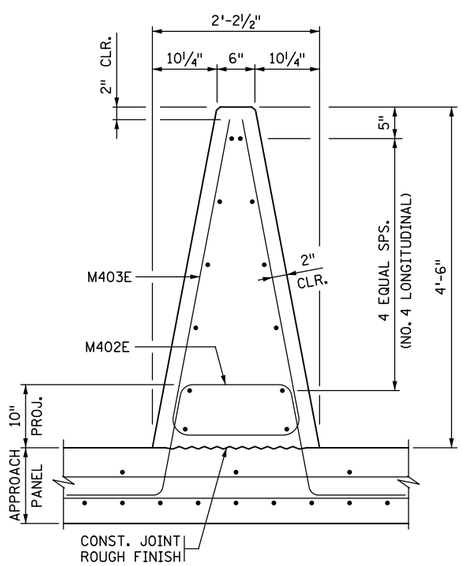

SECTION B-B

CONCRETE APPROACH PANEL

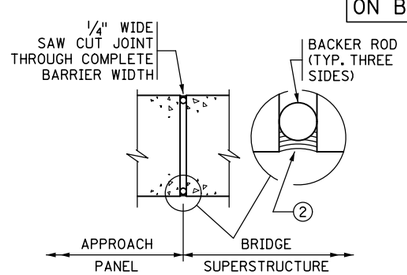

SECTION D-D

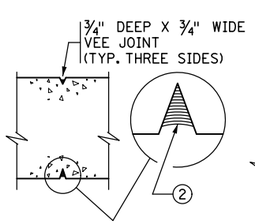

SECTION C-C

CAST-IN-PLACE CONSTRUCTION

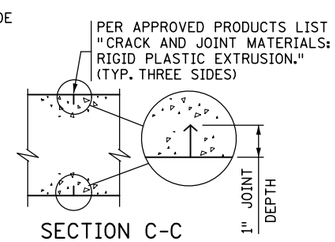

SECTION C-C

SLIPFORM CONSTRUCTION

CONTROL JOINT DETAILS

FOR SLIPFORM CONSTRUCTION: IMMEDIATELY AFTER CONCRETE IS PLACED AND WHILE IT IS STILL WET, CREATE A ONE INCH STRAIGHT GROOVE USING A TROWEL. INSERT RIGID PLASTIC EXTRUSION INTO GROOVE TO A DEPTH 1/8" BELOW THE SURFACE; FINISH OVER GROOVE COMPLETELY HIDING THE EXTRUSION.

INCREASE M401E VERTICAL LEGS IF DECK SLAB THICKNESS IS GREATER THAN 9".

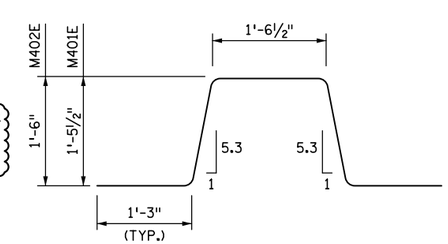

M401E & M402E

GENERAL NOTES

MEASURE PAYMENT LENGTH BETWEEN THE OUTSIDE ENDS OF THE BARRIER FROM THE E8 JOINT.

CONCRETE BARRIER = 914 LBS./FT. (0.226 CU. YDS/FT.)

FINISH ALL EDGES OF BARRIER WITH 1/2" CHAMFER EXCEPT WHERE OTHERWISE NOTED.

SPACE CONTROL JOINTS AT 10 FT. MAXIMUM. REFER TO SUPERSTRUCTURE SHEET FOR SPECIFIC SPACING INFORMATION.

BARRIER QUANTITIES ARE LISTED IN SUMMARY OF QUANTITIES FOR SUPERSTRUCTURE.

① PLACE BAR ON TOP OF BOTTOM REINFORCEMENT MAT IN DECK.

② JOINT SEALANT PER MnDOT APPROVED/QUALIFIED PRODUCTS LIST - CRACK AND JOINT MATERIALS - SILICONE JOINT SEALERS.

REVISION: MAY 10, 2017

APPROVED: AUGUST 24, 2016

Kevin Western

STATE BRIDGE ENGINEER

CERTIFIED BY _____ LICENSED PROFESSIONAL ENGINEER _____ DATE

NAME: LIC. NO.

TITLE: SOLID MEDIAN BARRIER 54" (TYPE S, TL-4)
INTEGRAL OR SEMI-INTEGRAL ABUTMENT (WITHOUT CONCRETE WEARING COURSE)

DES: DR: CHK: CHK:

SHEET NO. OF SHEETS

APPROVED:

FIG. 5-397.149(A)

BRIDGE NO.

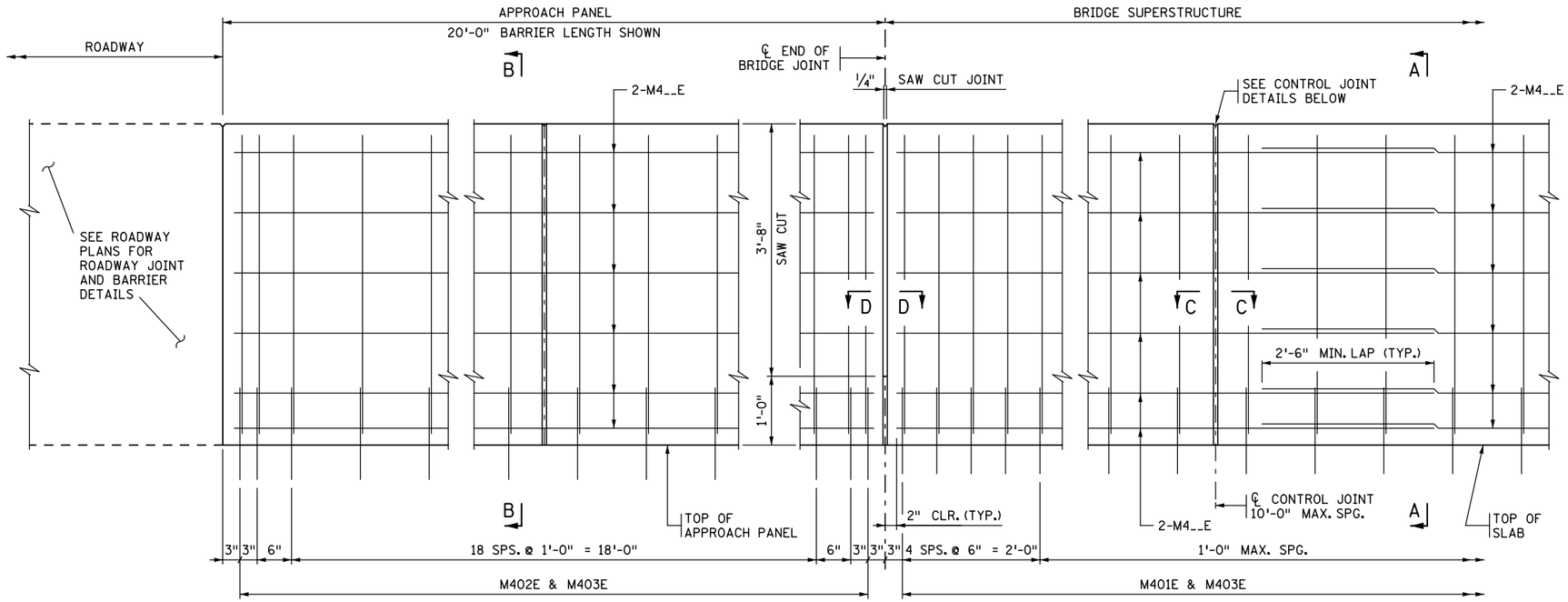

JOINT AT ABUTMENT

(INTEGRAL OR SEMI-INTEGRAL ABUTMENT)

CONTROL JOINT

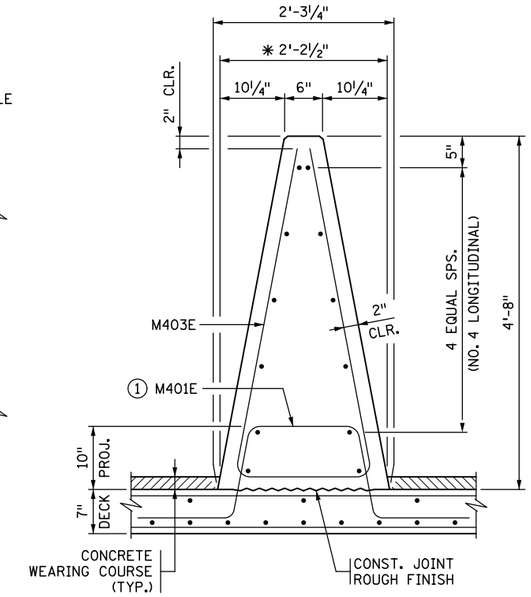

SECTION A-A

✱ DIMENSION SHOWN IS TO THE TOP OF THE WEARING COURSE AT GUTTERLINE.

INSIDE ELEVATION OF BARRIER

CONCRETE WEARING COURSE NOT SHOWN

BARRIER MEETS NCHRP 350 TL-4 REQUIREMENTS ON BRIDGE DECK AND TL-3 ON APPROACH PANEL.

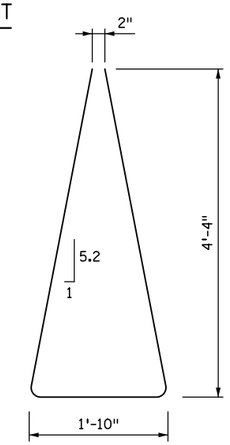

M403E

BILL OF REINFORCEMENT FOR BARRIER

BAR	NO.	LENGTH	SHAPE	LOCATION
M401E		6'-8"		BARRIER DOWEL
M402E		6'-9"		BARRIER DOWEL
M403E		10'-8"		BARRIER VERTICAL
M4__E				BARRIER LONGITUDINAL
M4__E				BARRIER LONGITUDINAL
M4__E				BARRIER LONGITUDINAL
M4__E				BARRIER LONGITUDINAL
M4__E				BARRIER LONGITUDINAL

DESIGNER NOTE
(REMOVE PRIOR TO PLOTTING FINAL PLAN):
VERIFY LENGTH OF BARRIER ON APPROACH PANEL WITH ROADWAY DESIGNER. REFER TO MEMO TO DESIGNERS (2016-01) FOR ADDITIONAL REQUIREMENTS REGARDING BARRIER PLACEMENT.

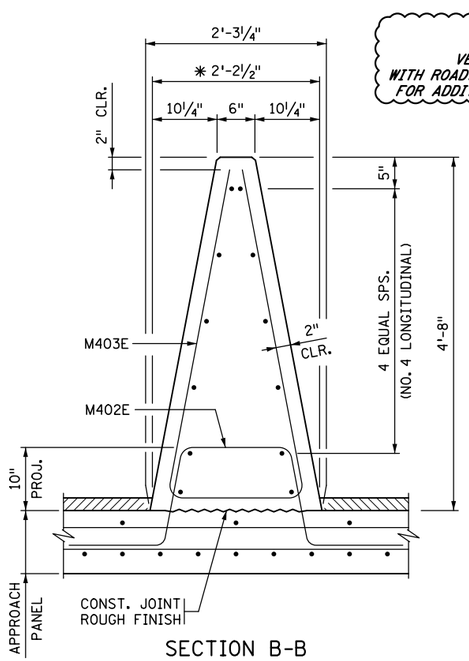

SECTION B-B

CONCRETE APPROACH PANEL.
✱ DIMENSION SHOWN IS TO THE TOP OF THE WEARING COURSE AT GUTTERLINE.

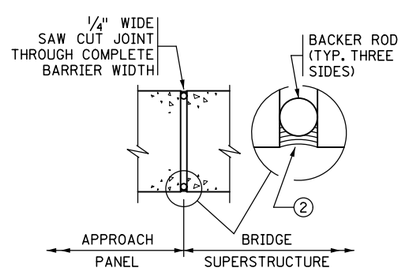

SECTION D-D

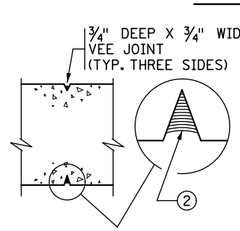

SECTION C-C

CAST-IN-PLACE CONSTRUCTION

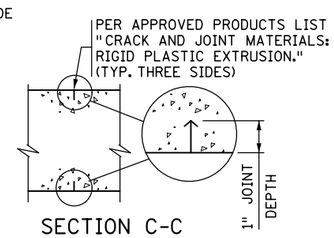

SECTION C-C

SLIPFORM CONSTRUCTION

CONTROL JOINT DETAILS

FOR SLIPFORM CONSTRUCTION: IMMEDIATELY AFTER CONCRETE IS PLACED AND WHILE IT IS STILL WET, CREATE A ONE INCH STRAIGHT GROOVE USING A TROWEL. INSERT RIGID PLASTIC EXTRUSION INTO GROOVE TO A DEPTH 1/8" BELOW THE SURFACE; FINISH OVER GROOVE COMPLETELY HIDING THE EXTRUSION.

INCREASE M401E VERTICAL LEGS IF DECK SLAB THICKNESS IS GREATER THAN 9".

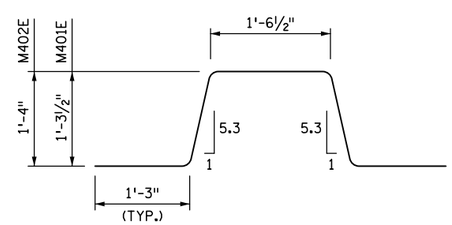

M401E & M402E

GENERAL NOTES

MEASURE PAYMENT LENGTH BETWEEN THE OUTSIDE ENDS OF THE BARRIER FROM THE E8 JOINT.

CONCRETE BARRIER = 970 LBS./FT. (0.240 CU. YDS/FT.)

FINISH ALL EDGES OF BARRIER WITH 1/2" CHAMFER EXCEPT WHERE OTHERWISE NOTED.

SPACE CONTROL JOINTS AT 10 FT. MAXIMUM. REFER TO SUPERSTRUCTURE SHEET FOR SPECIFIC SPACING INFORMATION.

BARRIER QUANTITIES ARE LISTED IN SUMMARY OF QUANTITIES FOR SUPERSTRUCTURE.

① PLACE BAR ON TOP OF BOTTOM REINFORCEMENT MAT IN DECK.

② JOINT SEALANT PER MnDOT APPROVED/QUALIFIED PRODUCTS LIST - CRACK AND JOINT MATERIALS - SILICONE JOINT SEALERS.

REVISION: MAY 10, 2017

APPROVED: AUGUST 24, 2016
Kevin Western
STATE BRIDGE ENGINEER

CERTIFIED BY _____ LICENSED PROFESSIONAL ENGINEER _____ DATE
NAME: LIC. NO.

TITLE: SOLID MEDIAN BARRIER 54" (TYPE S, TL-4)
INTEGRAL OR SEMI-INTEGRAL ABUTMENT (WITH 2" CONCRETE WEARING COURSE)

DES: DR: CHK: CHK:

SHEET NO. OF SHEETS

APPROVED:

FIG. 5-397.149(B)

BRIDGE NO.

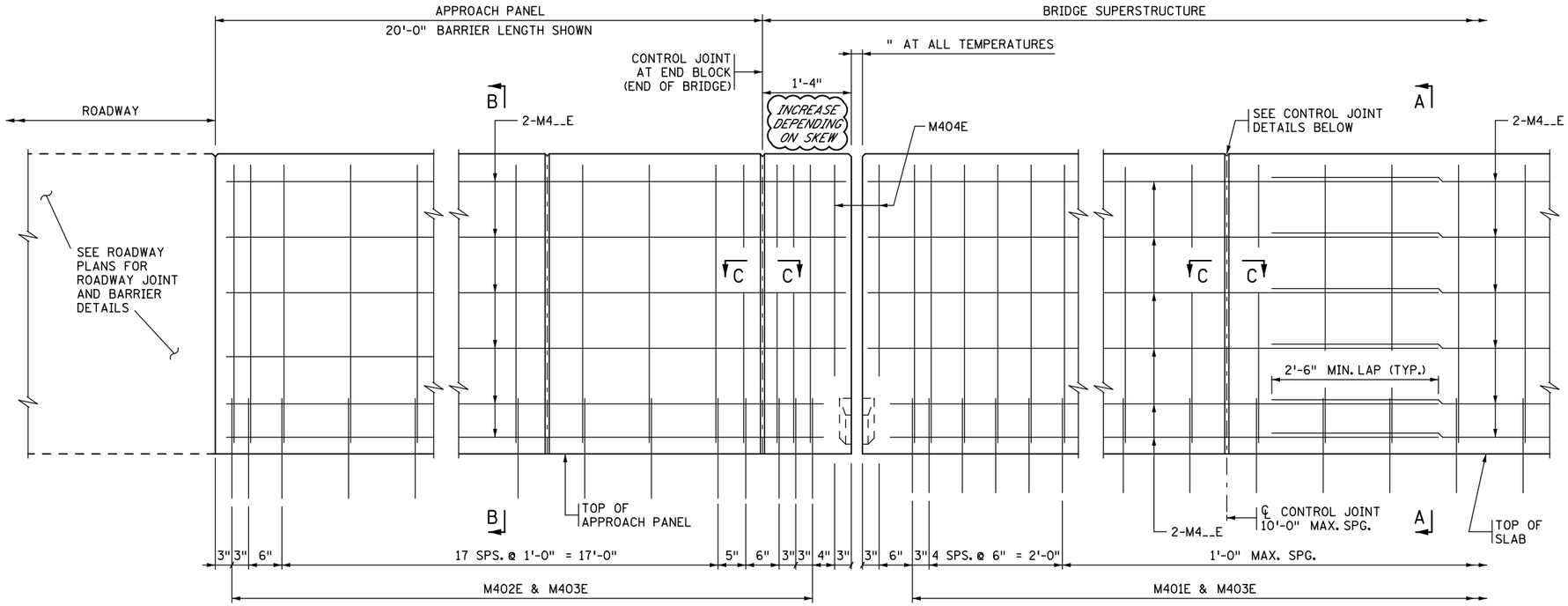

EXPANSION JOINT ③

EXPANSION DEVICE NOT SHOWN

CONTROL JOINT

INSIDE ELEVATION OF BARRIER

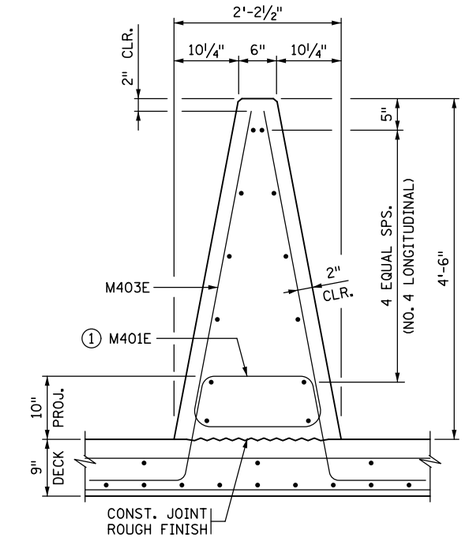

SECTION A-A

BILL OF REINFORCEMENT FOR BARRIER				
BAR	NO.	LENGTH	SHAPE	LOCATION
M401E		7'-0"		BARRIER DOWEL
M402E		7'-1"		BARRIER DOWEL
M403E		10'-3"		BARRIER VERTICAL
M404E		7'-10"		BARRIER VERTICAL
M4__E				BARRIER LONGITUDINAL
M4__E				BARRIER LONGITUDINAL
M4__E				BARRIER LONGITUDINAL
M4__E				BARRIER LONGITUDINAL

DESIGNER NOTE
(REMOVE PRIOR TO PLOTTING FINAL PLAN):
VERIFY LENGTH OF BARRIER ON APPROACH PANEL WITH ROADWAY DESIGNER. REFER TO MEMO TO DESIGNERS (2016-01) FOR ADDITIONAL REQUIREMENTS REGARDING BARRIER PLACEMENT.

BARRIER MEETS NCHRP 350 TL-4 REQUIREMENTS ON BRIDGE DECK AND TL-3 ON APPROACH PANEL.

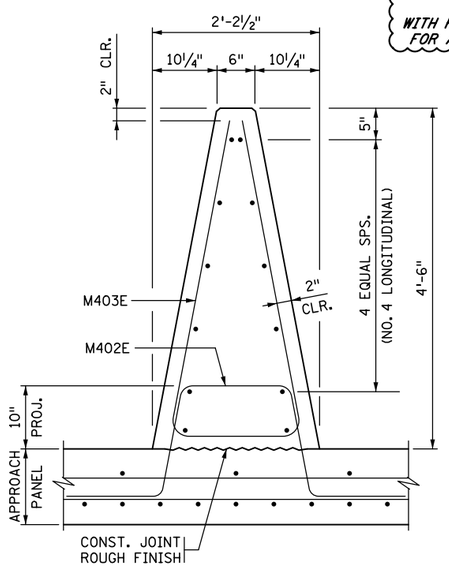

SECTION B-B

CONCRETE APPROACH PANEL

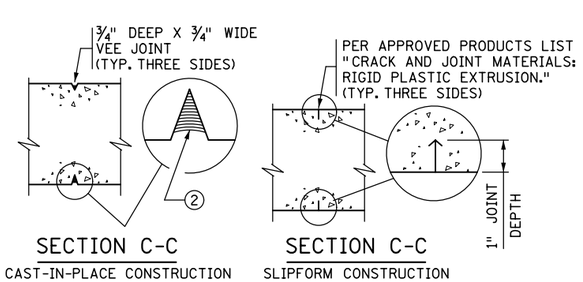

SECTION C-C

CAST-IN-PLACE CONSTRUCTION

SECTION C-C

SLIPFORM CONSTRUCTION

CONTROL JOINT DETAILS

FOR SLIPFORM CONSTRUCTION: IMMEDIATELY AFTER CONCRETE IS PLACED AND WHILE IT IS STILL WET, CREATE A ONE INCH STRAIGHT GROOVE USING A TROWEL. INSERT RIGID PLASTIC EXTRUSION INTO GROOVE TO A DEPTH ⅛" BELOW THE SURFACE; FINISH OVER GROOVE COMPLETELY HIDING THE EXTRUSION.

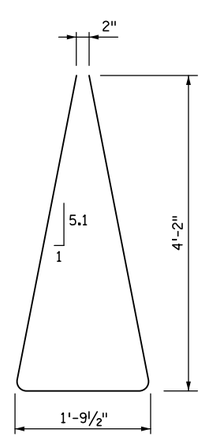

M403E

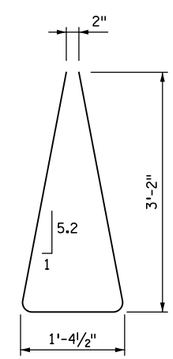

M404E

INCREASE M401E VERTICAL LEGS IF DECK SLAB THICKNESS IS GREATER THAN 9".

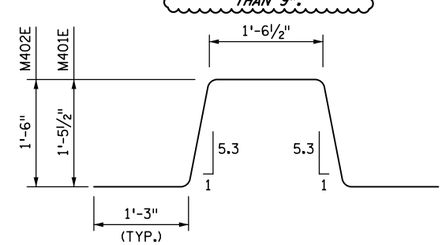

M401E & M402E

GENERAL NOTES

MEASURE PAYMENT LENGTH BETWEEN THE OUTSIDE ENDS OF THE BARRIER FROM THE E8 JOINT.

CONCRETE BARRIER = 914 LBS./FT. (0.226 CU. YDS/FT.)

FINISH ALL EDGES OF BARRIER WITH ½" CHAMFER EXCEPT WHERE OTHERWISE NOTED.

SPACE CONTROL JOINTS AT 10 FT. MAXIMUM. REFER TO SUPERSTRUCTURE SHEET FOR SPECIFIC SPACING INFORMATION.

BARRIER QUANTITIES ARE LISTED IN SUMMARY OF QUANTITIES FOR SUPERSTRUCTURE.

① PLACE BAR ON TOP OF BOTTOM REINFORCEMENT MAT IN DECK.

② JOINT SEALANT PER MnDOT APPROVED/QUALIFIED PRODUCTS LIST - CRACK AND JOINT MATERIALS - SILICONE JOINT SEALERS.

③ REFER TO "WATERPROOF EXPANSION DEVICE" STANDARD PLANS FOR COVER PLATE DETAILS.

REVISION: MAY 10, 2017

APPROVED: AUGUST 24, 2016

Kevin Western

STATE BRIDGE ENGINEER

CERTIFIED BY _____ LICENSED PROFESSIONAL ENGINEER _____ DATE

NAME: LIC. NO.

TITLE: SOLID MEDIAN BARRIER 54" (TYPE S, TL-4)
PARAPET ABUTMENT
(WITHOUT CONCRETE WEARING COURSE)

DES: DR:
CHK: CHK:

APPROVED:

FIG. 5-397.149(C)

BRIDGE NO.

SHEET NO. OF SHEETS

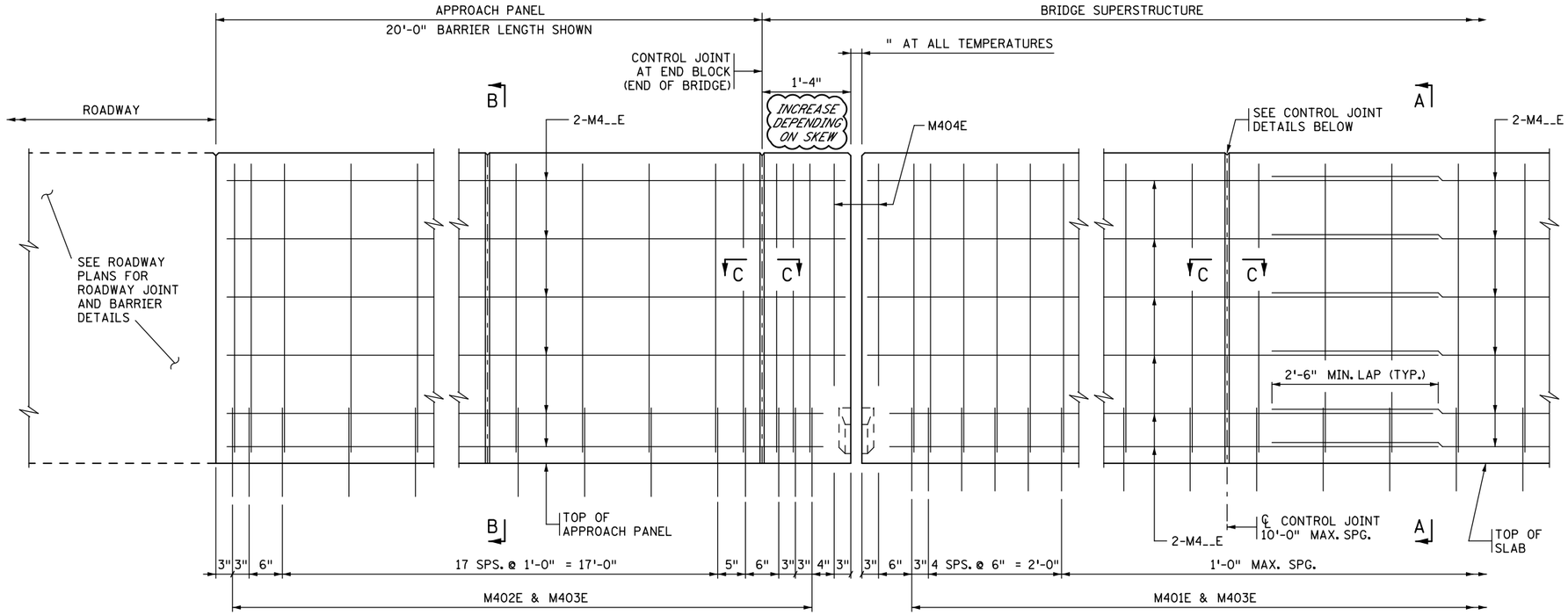

EXPANSION JOINT ③

EXPANSION DEVICE NOT SHOWN

CONTROL JOINT

INSIDE ELEVATION OF BARRIER

CONCRETE WEARING COURSE NOT SHOWN

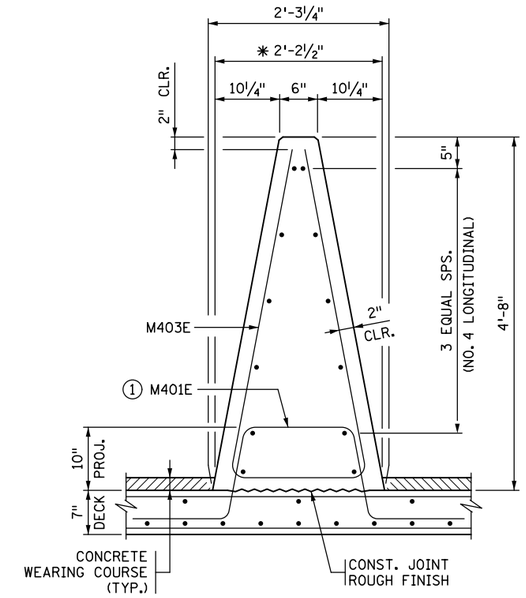

SECTION A-A

✱ DIMENSION SHOWN IS TO THE TOP OF THE WEARING COURSE AT GUTTERLINE.

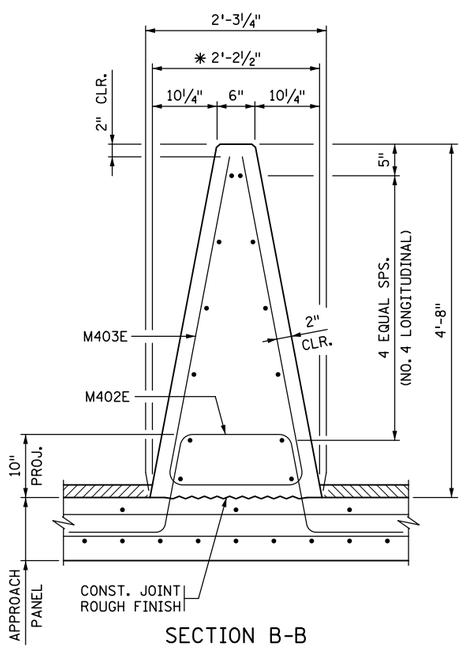

SECTION B-B

CONCRETE APPROACH PANEL.

✱ DIMENSION SHOWN IS TO THE TOP OF THE WEARING COURSE AT GUTTERLINE.

DESIGNER NOTE
(REMOVE PRIOR TO PLOTTING FINAL PLAN):
VERIFY LENGTH OF BARRIER ON APPROACH PANEL WITH ROADWAY DESIGNER. REFER TO MEMO TO DESIGNERS (2016-01) FOR ADDITIONAL REQUIREMENTS REGARDING BARRIER PLACEMENT.

BARRIER MEETS NCHRP 350 TL-4 REQUIREMENTS ON BRIDGE DECK AND TL-3 ON APPROACH PANEL.

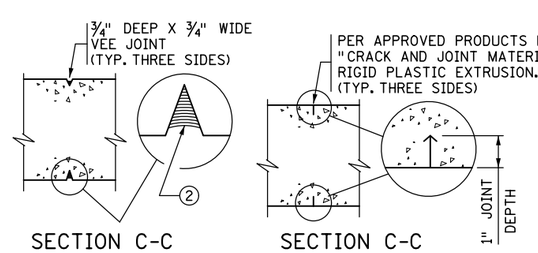

SECTION C-C

CAST-IN-PLACE CONSTRUCTION

SECTION C-C

SLIPFORM CONSTRUCTION

CONTROL JOINT DETAILS

FOR SLIPFORM CONSTRUCTION: IMMEDIATELY AFTER CONCRETE IS PLACED AND WHILE IT IS STILL WET, CREATE A ONE INCH STRAIGHT GROOVE USING A TROWEL. INSERT RIGID PLASTIC EXTRUSION INTO GROOVE TO A DEPTH ⅛" BELOW THE SURFACE; FINISH OVER GROOVE COMPLETELY HIDING THE EXTRUSION.

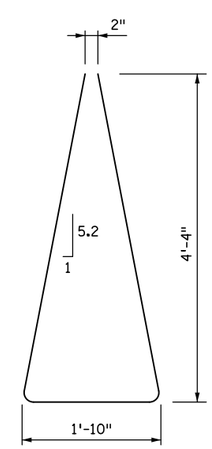

M403E

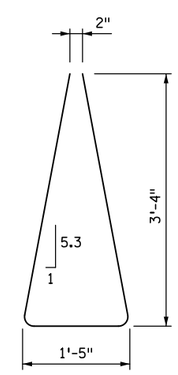

M404E

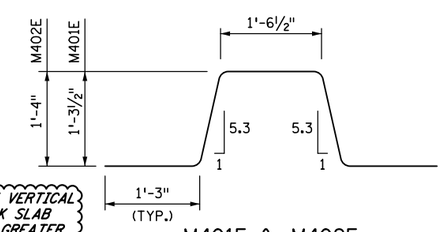

INCREASE M401E VERTICAL LEGS IF DECK SLAB THICKNESS IS GREATER THAN 9".

M401E & M402E

BILL OF REINFORCEMENT FOR BARRIER

BAR	NO.	LENGTH	SHAPE	LOCATION
M401E		6'-8"		BARRIER DOWEL
M402E		6'-9"		BARRIER DOWEL
M403E		10'-6"		BARRIER VERTICAL
M404E		8'-2"		BARRIER VERTICAL
M4__E				BARRIER LONGITUDINAL
M4__E				BARRIER LONGITUDINAL
M4__E				BARRIER LONGITUDINAL
M4__E				BARRIER LONGITUDINAL

GENERAL NOTES

MEASURE PAYMENT LENGTH BETWEEN THE OUTSIDE ENDS OF THE BARRIER FROM THE E8 JOINT.

CONCRETE BARRIER = 970 LBS./FT. (0.240 CU. YDS/FT.)

FINISH ALL EDGES OF BARRIER WITH ½" CHAMFER EXCEPT WHERE OTHERWISE NOTED.

SPACE CONTROL JOINTS AT 10 FT. MAXIMUM. REFER TO SUPERSTRUCTURE SHEET FOR SPECIFIC SPACING INFORMATION.

BARRIER QUANTITIES ARE LISTED IN SUMMARY OF QUANTITIES FOR SUPERSTRUCTURE.

① PLACE BAR ON TOP OF BOTTOM REINFORCEMENT MAT IN DECK.

② JOINT SEALANT PER MnDOT APPROVED/QUALIFIED PRODUCTS LIST - CRACK AND JOINT MATERIALS - SILICONE JOINT SEALERS.

③ REFER TO "WATERPROOF EXPANSION DEVICE" STANDARD PLANS FOR COVER PLATE DETAILS.

REVISION: MAY 10, 2017

APPROVED: AUGUST 24, 2016

Kevin Western

STATE BRIDGE ENGINEER

CERTIFIED BY _____ LICENSED PROFESSIONAL ENGINEER _____ DATE

NAME: LIC. NO.

TITLE: SOLID MEDIAN BARRIER 54" (TYPE S, TL-4) PARAPET ABUTMENT (WITH 2" CONCRETE WEARING COURSE)

DES: DR: CHK: CHK:

SHEET NO. OF SHEETS

APPROVED:

FIG. 5-397.149(D)

BRIDGE NO.

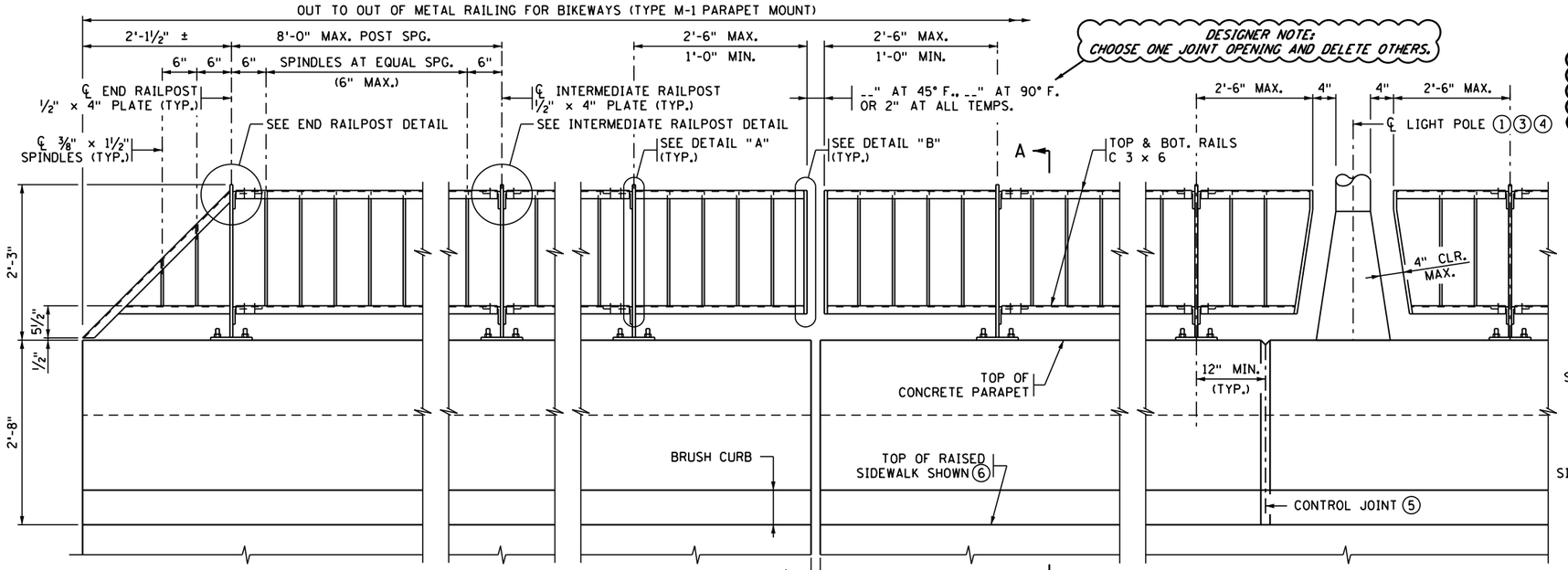

INSIDE ELEVATION OF RAILING

DESIGNER NOTE
(REMOVE PRIOR TO PLOTTING FINAL PLAN):
FOR ROADWAY DESIGN SPEEDS GREATER THAN
45 MPH ORNAMENTAL RAILING MUST
BE PROTECTED BY A TRAFFIC BARRIER.

DESIGNER NOTE
(REMOVE PRIOR TO PLOTTING FINAL PLAN):
PARAPET SHOWN BASED ON STANDARD FIGURE 5-397.166.

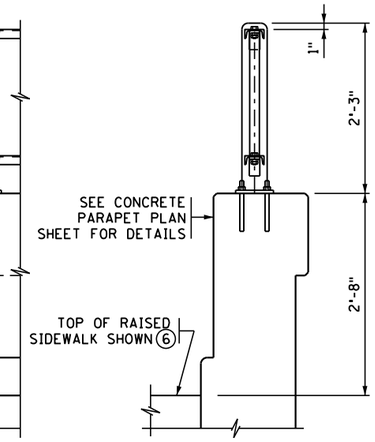

SECTION A-A

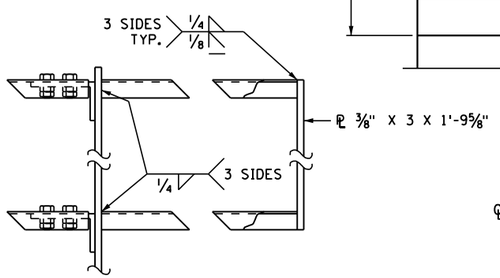

DETAIL "A" DETAIL "B"

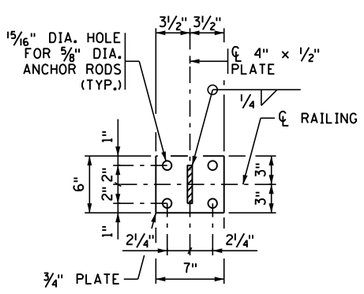

RAILPOST
BASE PLATE

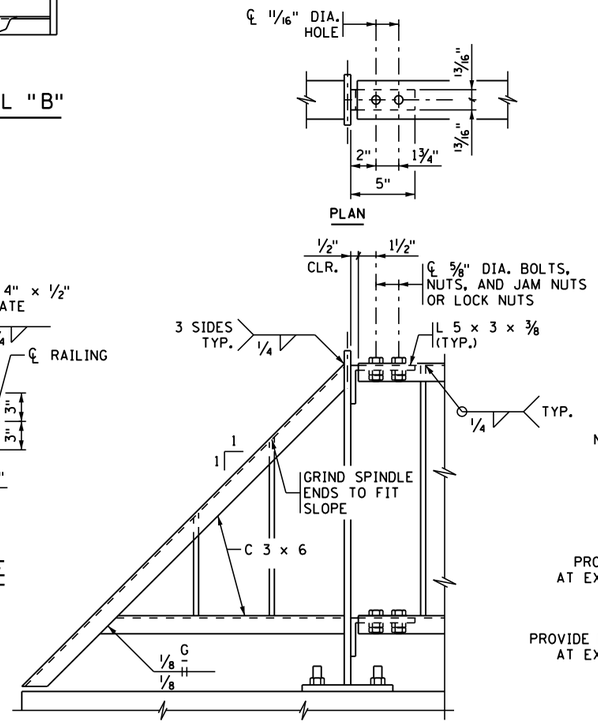

END RAILPOST DETAIL

TOP AND BOTTOM
RAIL CONNECTIONS SIMILAR

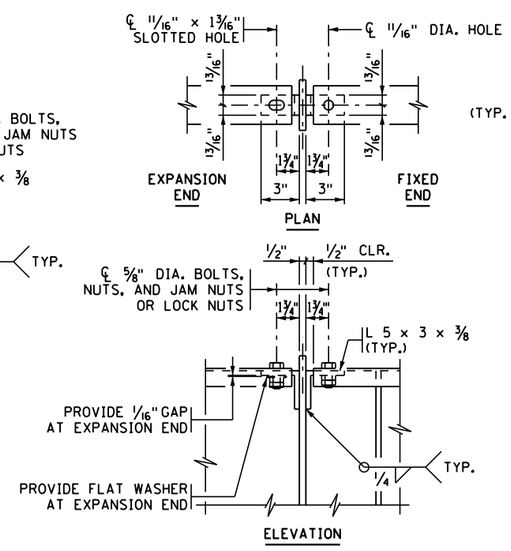

INTERMEDIATE RAILPOST DETAIL

TOP AND BOTTOM RAIL CONNECTIONS SIMILAR

DESIGNER NOTE
(REMOVE PRIOR TO PLOTTING FINAL PLAN):
DESIGNER SHALL CONSULT WITH
BRIDGE OFFICE ARCHITECTURAL SPECIALIST
TO CHOOSE ONE OPTION (NORMAL OR PLUMB)
AND DELETE THE OTHER.

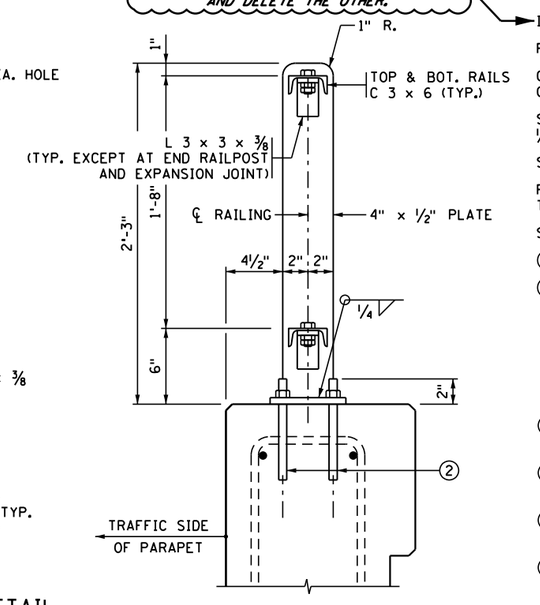

TYPICAL RAILPOST

SPINDLE NOT SHOWN

GENERAL NOTES

CONTINUOUSLY GROUND ALL METAL RAILINGS; SEE SPECIAL PROVISIONS. REFER TO THE ELECTRICAL PLANS AND ELECTRICAL SPECIAL PROVISIONS FOR DETAILS REGARDING BONDING MULTIPLE ELECTRICAL GROUNDING SYSTEMS.

MEASURE PAYMENT LENGTH AS THE OUT TO OUT LENGTH ALONG THE CENTERLINE OF THE RAILING BETWEEN THE OUTSIDE ENDS.

INSTALL RAIL POSTS AND SPINDLES *[NORMAL TO GRADE OR PLUMB.]*

PROVIDE STRUCTURAL STEEL PER SPEC. 3306.

GALVANIZE BOLTS, NUTS, WASHERS AND ANCHORS PER SPEC. 3392. GALVANIZE ALL OTHER STRUCTURAL STEEL PER SPEC. 3394, AFTER FABRICATION.

STRAIGHTEN ALL RAILING MEMBERS AFTER FABRICATION AND GALVANZING TO WITHIN ⅛" IN 10 FT. BY MECHANICAL MEANS WITHOUT DAMAGE TO ZINC COATING.

SEE SPECIAL PROVISIONS FOR COATING TO BE APPLIED TO METAL RAILING.

PRICE BID FOR METAL RAILING INCLUDES ANCHORAGES AND ALL MATERIAL ABOVE TOP OF CONCRETE PARAPET.

SEE SPECIAL PROVISIONS FOR REQUIREMENTS NOT INCLUDED ON THIS SHEET.

① SEE STANDARD BRIDGE DETAIL B950 FOR LIGHT POLE ANCHORAGE IF REQUIRED

② ADHESIVE ANCHORAGE WITH ⅝" DIA. ANCHOR ROD PER SPEC. 3385, TYPE A WITH HEX NUT AND WASHER. PROVIDE AN ADHESIVE WITH A MINIMUM CHARACTERISTIC BOND STRENGTH IN UNCRACKED CONCRETE OF 1.5 KSI. EMBED THE ANCHORAGE NO LESS THAN 5" REGARDLESS OF CHARACTERISTIC BOND STRENGTH. DRILL THROUGH REINFORCEMENT (IF ENCOUNTERED) TO ACHIEVE MINIMUM EMBEDMENT. ENSURE HEX NUT IS IN CONTACT WITH THE ADJACENT SURFACE AND TORQUE TO 60 FT-LBS UNLESS A HIGHER TORQUE IS RECOMMENDED BY THE MANUFACTURER. PROOF LOAD TO 6.9 KIPS. SEE SPECIAL PROVISIONS FOR ADDITIONAL REQUIREMENTS.

③ IF LIGHT POLE IS MOUNTED ON BLISTER, RAILING MAY BE CONTINUOUS IN FRONT OF LIGHT POLE (SEE PARAPET & LIGHT POLE DETAILS).

④ COORDINATE LIGHT POLE DETAILS WITH THE RAILING FABRICATOR TO ENSURE PROPER CLEARANCES AND RAILING CONFIGURATION ADJACENT TO THE POLE.

⑤ SEE SUPERSTRUCTURE SHEETS AND CONCRETE PARAPET PLAN SHEET FOR CONTROL JOINT SPACING AND DETAILS.

⑥ IF NON-RAISED SIDEWALK, SEE CONCRETE PARAPET PLAN SHEET.

REVISED: FEBRUARY 27, 2019

APPROVED: DECEMBER 02, 2015

STATE BRIDGE ENGINEER

CERTIFIED BY _____ LICENSED PROFESSIONAL ENGINEER _____ DATE

NAME: LIC. NO.

TITLE: METAL RAILING (TYPE M-1) FOR BIKEWAYS ON CONCRETE PARAPET (TYPE P-1)

DES: DR: CHK: CHK:

SHEET NO. OF SHEETS

APPROVED:

FIG. 5-397.154

BRIDGE NO.

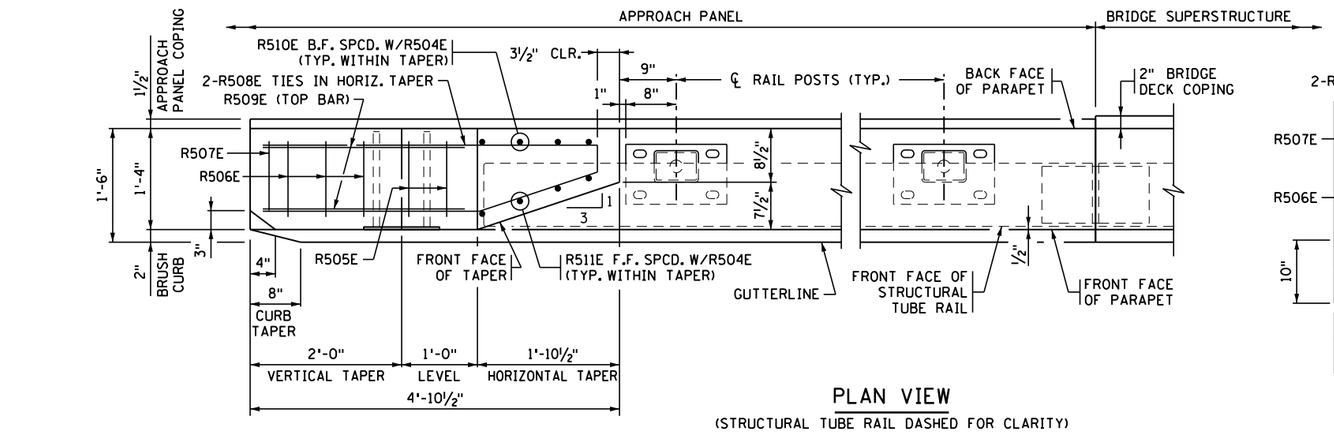

PLAN VIEW

(STRUCTURAL TUBE RAIL DASHED FOR CLARITY)

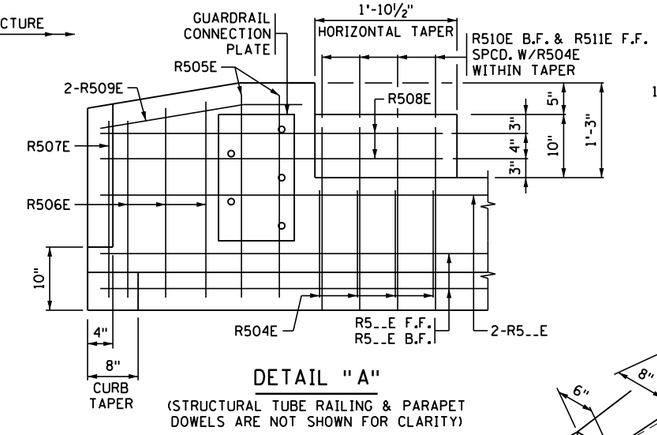

DETAIL "A"

(STRUCTURAL TUBE RAILING & PARAPET DOWELS ARE NOT SHOWN FOR CLARITY)

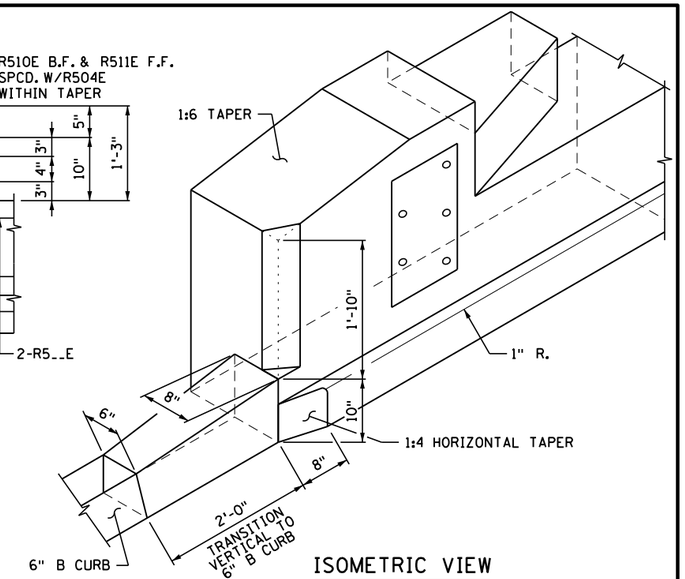

ISOMETRIC VIEW

(END OF PARAPET)
(STRUCTURAL TUBE RAIL NOT SHOWN)

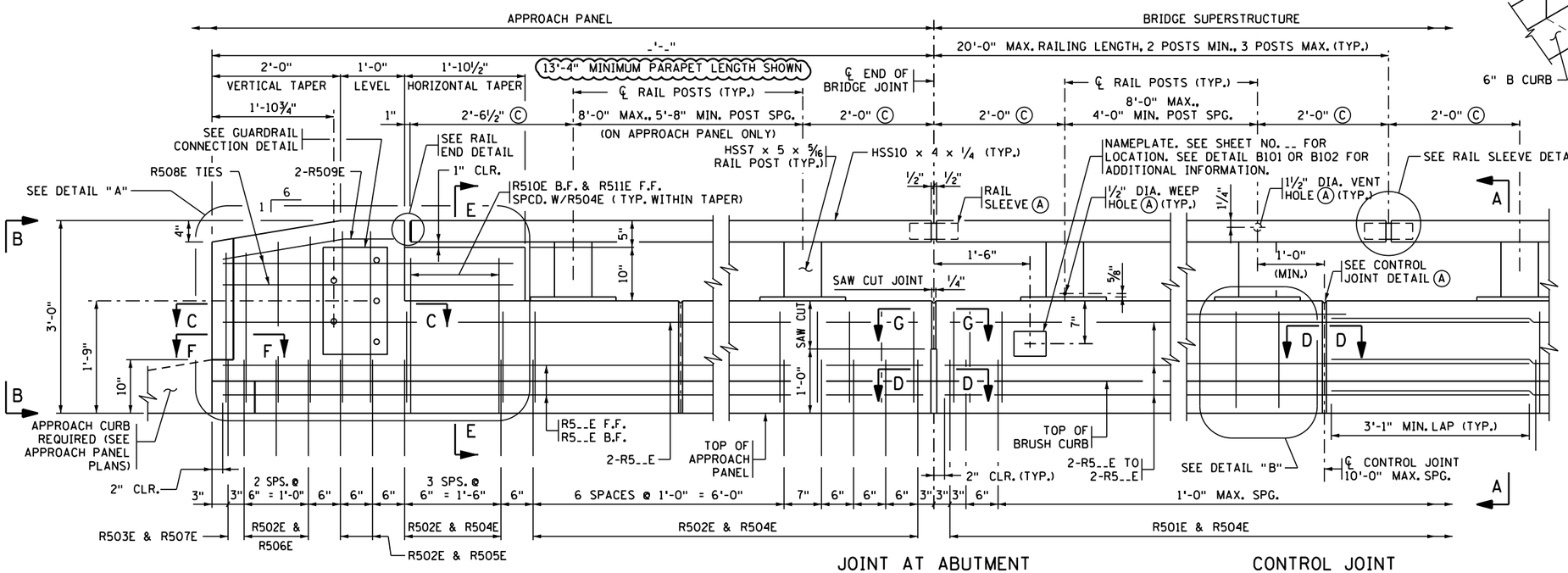

JOINT AT ABUTMENT

(INTEGRAL OR SEMI-INTEGRAL ABUTMENT)

CONTROL JOINT

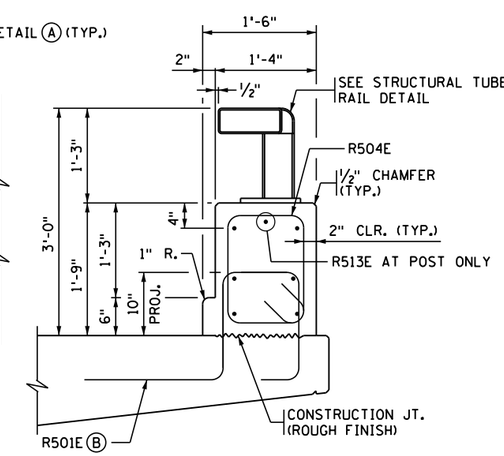

SECTION A-A

INSIDE ELEVATION OF PARAPET/RAILING

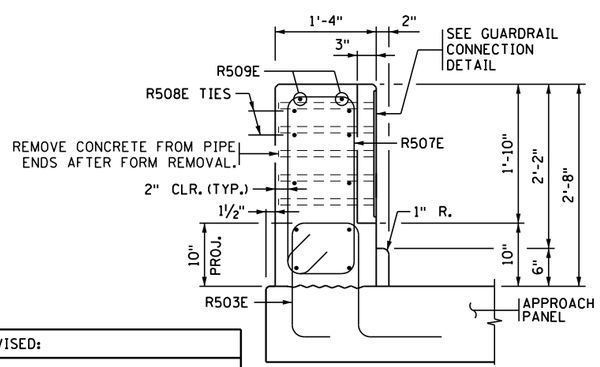

END VIEW B-B

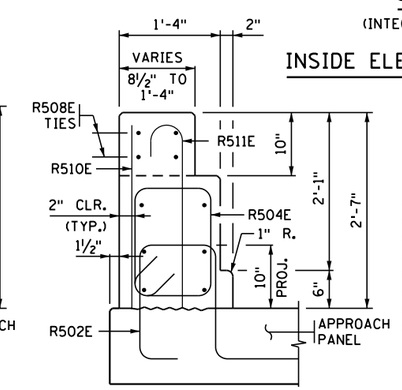

SECTION E-E

(STRUCTURAL TUBE RAIL NOT SHOWN)

PARAPET/RAILING COMBINATION MEETS TL-4 REQUIREMENTS OF NCHRP REPORT 350 ON BRIDGE DECK AND TL-3 ON APPROACH PANEL

DESIGNER NOTE
(REMOVE PRIOR TO PRINTING FINAL PLAN):

FOR BRIDGES WITH SUPERELEVATION EXCEEDING 2%, SHOW DIMENSIONS FOR BOTH THE FRONT AND BACK FACE OF THE PARAPET. ALSO VERIFY THAT BAR R501E HAS 10" MIN. PROJECTION WHEN CROSS SLOPE VARIES FROM NORMAL 0.02 FT/FT

DESIGNER NOTE
(REMOVE PRIOR TO PRINTING FINAL PLAN):

MINIMUM BARRIER LENGTH ON APPROACH PANEL IS 13'-4" WITH MINIMUM OF 21 R502E & R503E DOWELS WITH ACCOMPANYING APPROPRIATE PARAPET VERTICAL BARS. VERIFY APPROACH PARAPET LENGTH WITH ROADWAY DESIGNER.

REFER TO MEMO TO DESIGNERS #2020-01 FOR ADDITIONAL REQUIREMENTS REGARDING BARRIER PLACEMENT.

NOTES:

F.F. DENOTES FRONT FACE
B.F. DENOTES BACK FACE

Ⓐ SEE SHEET 2 OF 2 FOR DETAILS.

Ⓑ PLACE BAR ON TOP OF BOTTOM REINFORCEMENT MAT IN DECK.

Ⓒ STRUCTURAL TUBE RAIL CANTILEVER DIMENSIONS ARE BASED ON SUCCESSFUL CRASH TESTS AND SHOULD NOT BE MODIFIED.

CODE 51

FIG. 5-397.157(A) (1 OF 2)

REVISED:

APPROVED: APRIL 09, 2020
Kevin Western
STATE BRIDGE ENGINEER

CERTIFIED BY
LICENSED PROFESSIONAL ENGINEER — DATE
NAME: LIC. NO.

TITLE: STRUCTURAL TUBE RAILING (DESIGN T-1) AND CONCRETE PARAPET (TYPE P-2, TL-4)
INTEGRAL OR SEMI-INTEGRAL ABUTMENT WITH GUARDRAIL CONNECTION (WITHOUT CONCRETE WEARING COURSE)

DES: DR: CHK: CHK:
SHEET NO. OF SHEETS

APPROVED:

BRIDGE NO.

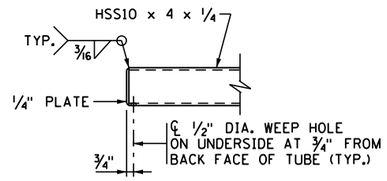

RAIL END DETAIL

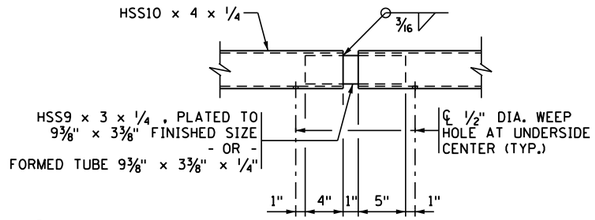

RAIL SLEEVE DETAIL

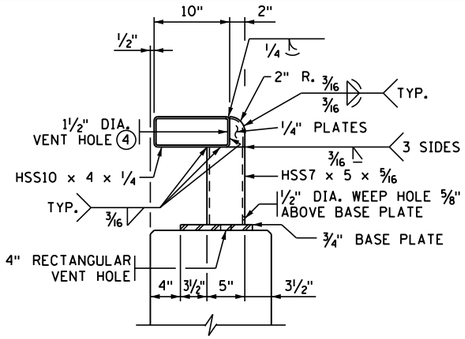

STRUCTURAL TUBE RAIL DETAIL

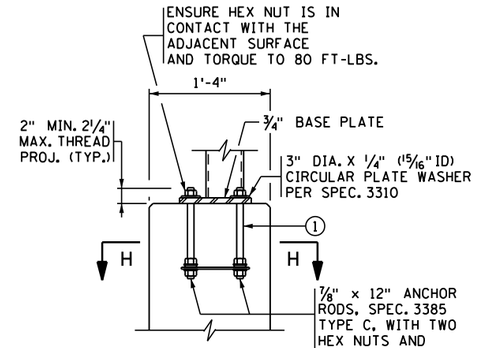

ANCHOR DETAIL

BILL OF REINFORCEMENT FOR PARAPET

BAR	NO.	LENGTH	SHAPE	LOCATION
R501E		6'-2"		PARAPET DOWEL
R502E		6'-4"		PARAPET DOWEL
R503E		6'-4"		PARAPET DOWEL
R504E		5'-9"		PARAPET VERTICAL
R505E		8'-3"		PARAPET VERTICAL
R506E	SER. OF 3	7'-9" TO 8'-1"		PARAPET VERTICAL
R507E		7'-5"		PARAPET VERTICAL
R508E		9'-1"		PARAPET LONGITUDINAL
R509E		2'-8"		PARAPET LONG. IN TAPER
R510E		2'-5"		PARAPET VERTICAL B.F.
R511E		3'-0"		PARAPET VERTICAL F.F.
R512E		3'-10"		VERTICAL @ BASE PLATE
R513E		4'-0"		LONGIT. @ BASE PLATE
R5__E				PARAPET LONGITUDINAL
R5__E				PARAPET LONGITUDINAL
R5__E				PARAPET LONGITUDINAL
R5__E				PARAPET LONGITUDINAL
R5__E				PARAPET LONGITUDINAL

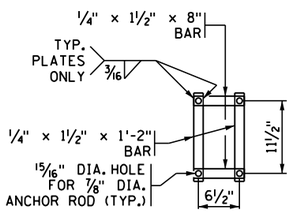

SECTION H-H

(ANCHOR BAR ALTERNATE)

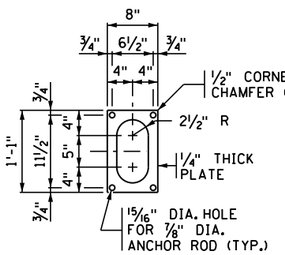

SECTION H-H

(ANCHOR PLATE ALTERNATE)

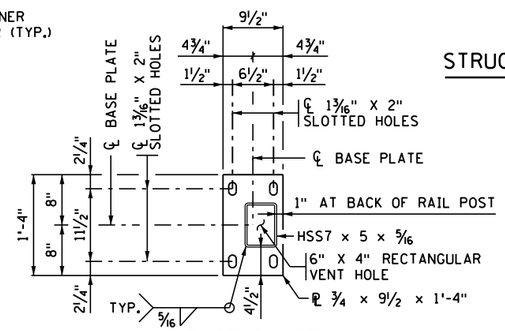

BASE PLATE

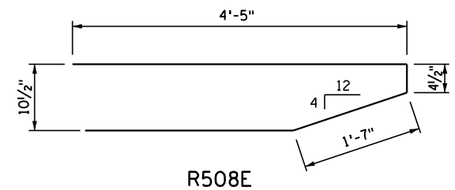

R508E

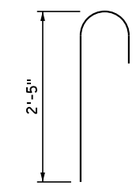

R511E

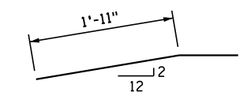

R509E

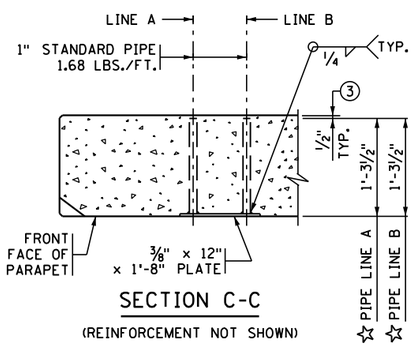

SECTION C-C

(REINFORCEMENT NOT SHOWN)

TRIM GUARDRAIL BOLTS SUCH THAT NO MORE THAN 1 1/2" PROTRUDES FROM BACK FACE OF PARAPET.

☆ DIMENSIONS INCLUDE 3/8" PLATE

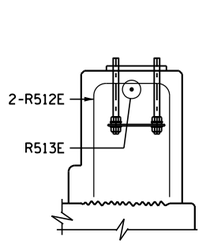

SECTION J-J

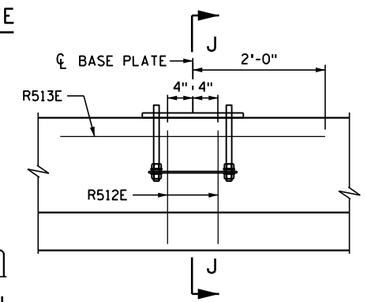

DETAIL "B"

(TYP. AT ALL RAIL POST ANCHORAGES)

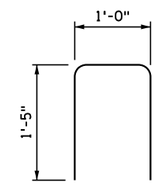

R512E

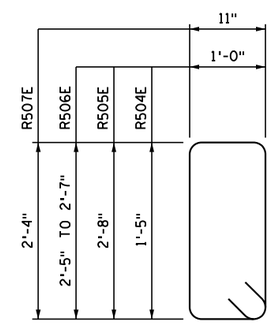

R504E, R505E, R506E, R507E

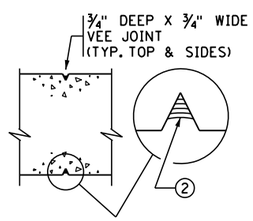

SECTION D-D

CONTROL JOINT DETAIL

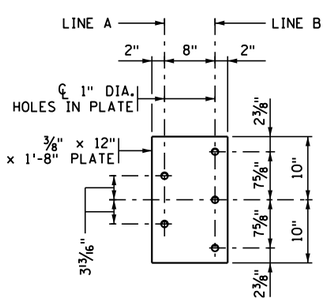

GUARDRAIL CONNECTION DETAIL

GALVANIZE AFTER FABRICATION PER SPEC. 3394
ESTIMATED WEIGHT = 37 LBS.

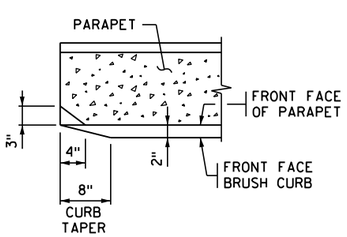

SECTION F-F

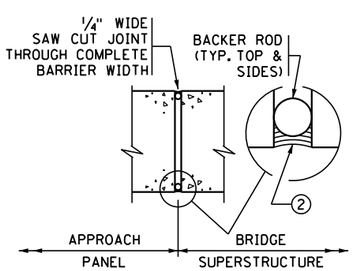

SECTION G-G

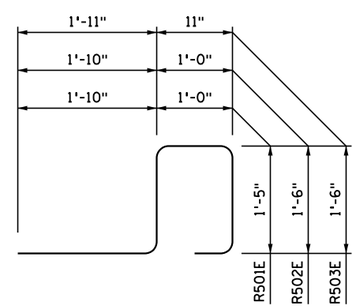

R501E, R502E, R503E

GENERAL NOTES

MEASURE PAYMENT LENGTH OF "TYPE P-2 (TL-4) BARRIER CONCRETE (3S52)" BETWEEN THE OUTSIDE ENDS OF THE PARAPET.
CONCRETE PARAPET = 362 LBS./FT. (0.090 CU. YDS./FT.)

MEASURE PAYMENT LENGTH OF "STRUCTURAL TUBE RAILING DESIGN T-1" FROM END TO END OF TUBING. DO NOT DEDUCT FOR JOINTS.

FINISH ALL EDGES OF PARAPET WITH 1/2" CHAMFER, EXCEPT WHERE OTHERWISE NOTED.

SPACE CONTROL JOINTS AT 10 FT. MAXIMUM. REFER TO SUPERSTRUCTURE SHEET FOR SPECIFIC SPACING INFORMATION.

PROVIDE CORRECT ALIGNMENT FOR ANCHORAGES BY PLACING THEM ACCURATELY AND NORMAL TO GRADE. SEE SPECIAL PROVISIONS.

INSTALL RAIL POSTS NORMAL TO GRADE.

PROVIDE STRUCTURAL STEEL AND PLATE WASHERS IN ACCORDANCE WITH SPEC. 3310. PROVIDE STRUCTURAL TUBES PER ASTM A500, GRADE B IN ACCORDANCE WITH SPEC. 3361.

GALVANIZE BOLTS, NUTS, AND WASHERS IN ACCORDANCE WITH SPEC. 3392.

GALVANIZE ALL OTHER STRUCTURAL STEEL IN ACCORDANCE WITH SPEC. 3394, AFTER FABRICATION.

GUARDRAIL CONNECTION TO BE STRUCTURAL STEEL IN ACCORDANCE WITH SPEC. 3306.

GUARDRAIL CONNECTION AND NAMEPLATE TO BE CONSIDERED INCIDENTAL.

PRICE BID FOR "STRUCTURAL TUBE RAILING DESIGN T-1" INCLUDES ANCHORAGES AND ALL MATERIAL ABOVE TOP OF CONCRETE PARAPET.

ALL MATERIAL IN THE CONCRETE PARAPET IS LISTED IN SUMMARY OF QUANTITIES FOR SUPERSTRUCTURE.

SEE SPECIAL PROVISIONS FOR COATING TO BE APPLIED TO METAL RAILING.

CONTINUOUSLY GROUND ALL METAL RAILINGS, SEE THE SPECIAL PROVISIONS. REFER TO THE ELECTRICAL PLANS AND ELECTRICAL SPECIAL PROVISIONS FOR DETAILS REGARDING BONDING MULTIPLE ELECTRICAL GROUNDING SYSTEMS.

1. SUBSTITUTION OF ADHESIVE ANCHORAGE FOR CAST-IN-PLACE ANCHORAGE IS NOT PERMITTED.
2. JOINT SEALANT PER MnDOT APPROVED/QUALIFIED PRODUCTS LIST - CRACK AND JOINT MATERIALS - SILICONE JOINT SEALERS.
3. REMOVE CONCRETE FROM PIPE ENDS AFTER FORM REMOVAL.
4. CENTER HOLE 1 1/4" FROM TOP OF TUBE.

CODE 51

FIG. 5-397.157(A) (2 OF 2)

REVISED:

APPROVED: APRIL 09, 2020
Kevin Western
STATE BRIDGE ENGINEER

CERTIFIED BY _____ LICENSED PROFESSIONAL ENGINEER _____ DATE
NAME: LIC. NO.

TITLE: STRUCTURAL TUBE RAILING (DESIGN T-1) AND CONCRETE PARAPET (TYPE P-2, TL-4)
INTEGRAL OR SEMI-INTEGRAL ABUTMENT WITH GUARDRAIL CONNECTION (WITHOUT CONCRETE WEARING COURSE)

DES: DR: CHK: CHK:

APPROVED:

SHEET NO. OF SHEETS

BRIDGE NO.

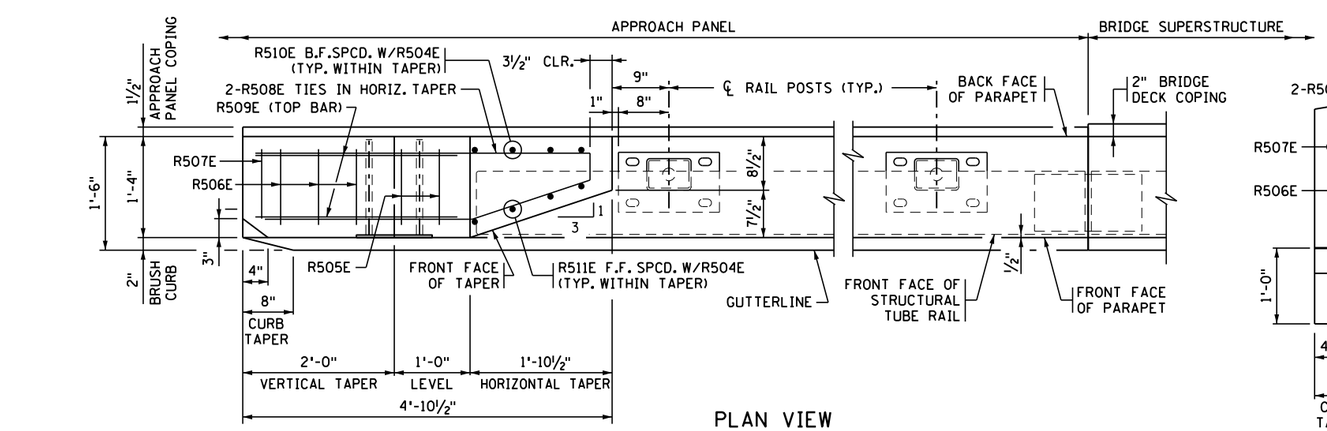

PLAN VIEW

(STRUCTURAL TUBE RAIL DASHED FOR CLARITY)

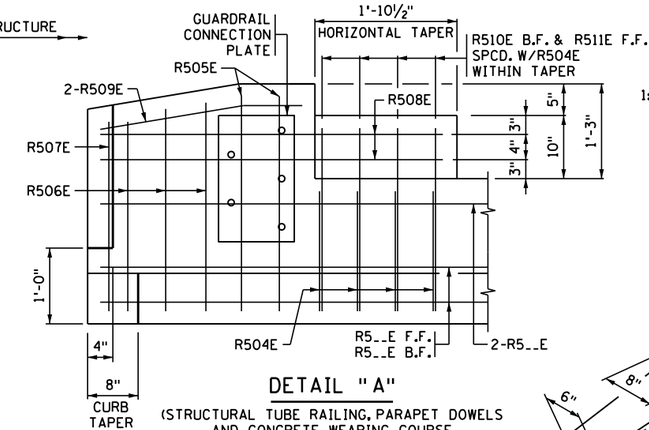

DETAIL "A"

(STRUCTURAL TUBE RAILING, PARAPET DOWELS AND CONCRETE WEARING COURSE ARE NOT SHOWN FOR CLARITY)

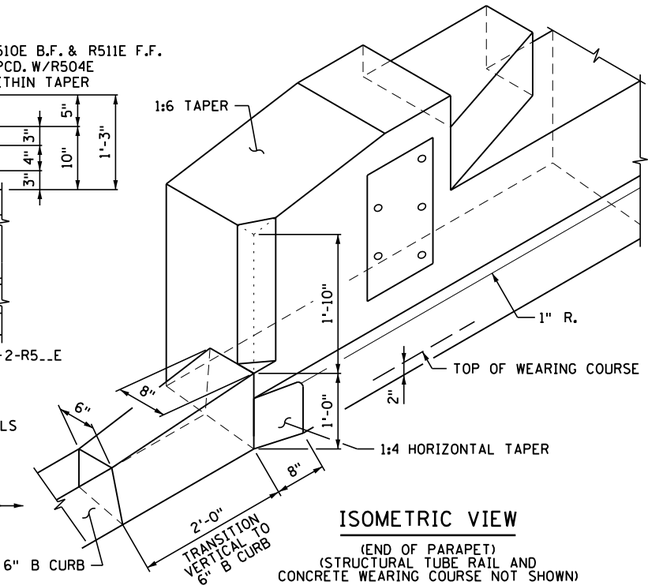

ISOMETRIC VIEW

(END OF PARAPET)
(STRUCTURAL TUBE RAIL AND CONCRETE WEARING COURSE NOT SHOWN)

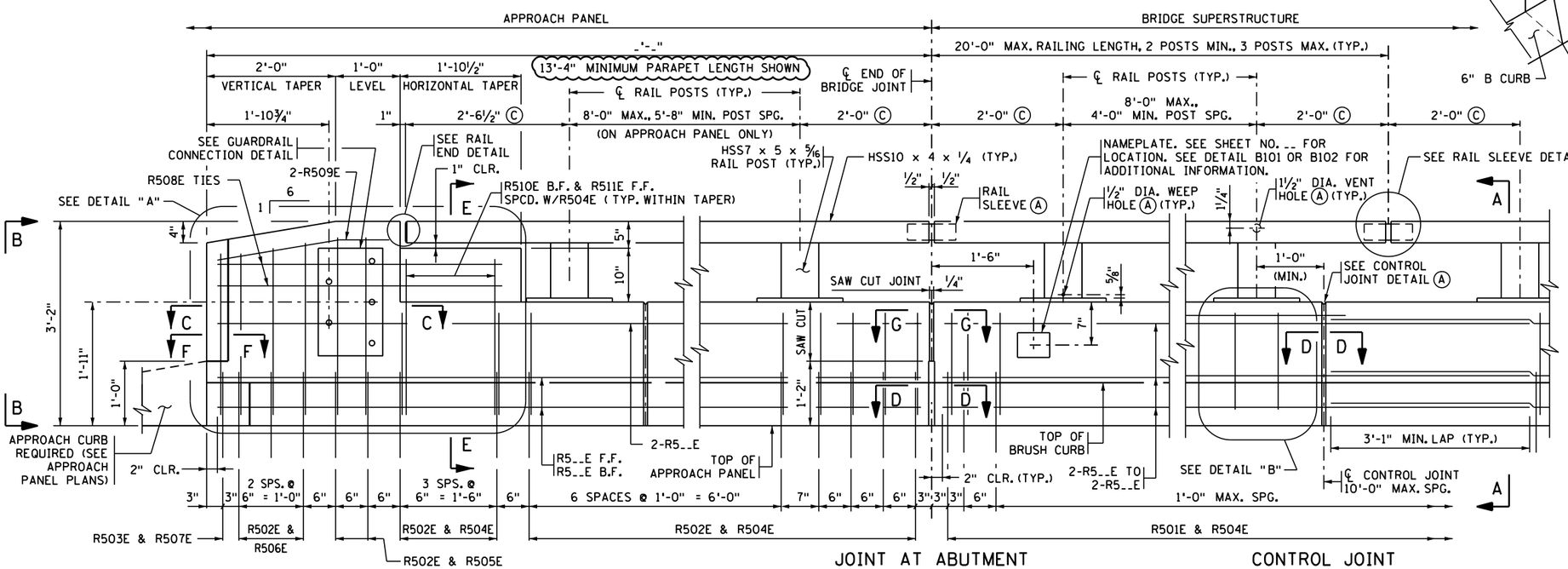

JOINT AT ABUTMENT

(INTEGRAL OR SEMI-INTEGRAL ABUTMENT)

CONTROL JOINT

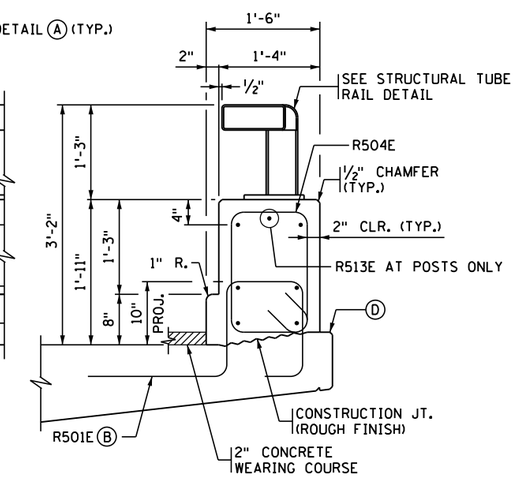

SECTION A-A

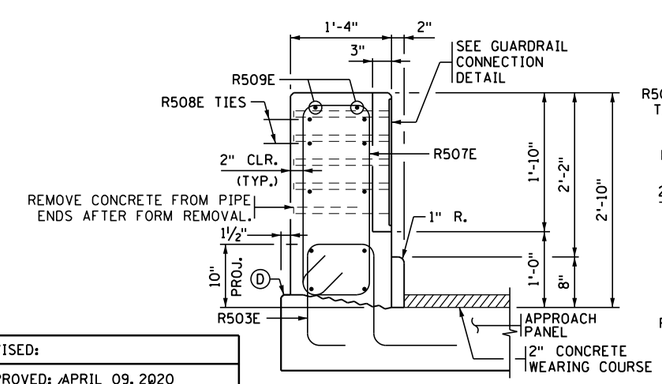

END VIEW B-B

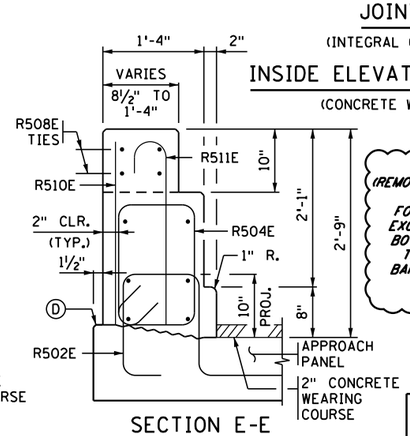

SECTION E-E

(STRUCTURAL TUBE RAIL NOT SHOWN)

INSIDE ELEVATION OF PARAPET/RAILING

(CONCRETE WEARING COURSE NOT SHOWN)

DESIGNER NOTE (REMOVE PRIOR TO PRINTING FINAL PLAN):

FOR BRIDGES WITH SUPERELEVATION EXCEEDING 2%, SHOW DIMENSIONS FOR BOTH THE FRONT AND BACK FACE OF THE PARAPET. ALSO VERIFY THAT BAR R501E HAS 10" MIN. PROJECTION WHEN CROSS SLOPE VARIES FROM NORMAL 0.02 FT/FT

PARAPET/RAILING COMBINATION MEETS TL-4 REQUIREMENTS OF NCHRP REPORT 350 ON BRIDGE DECK AND TL-3 ON APPROACH PANEL

DESIGNER NOTE (REMOVE PRIOR TO PRINTING FINAL PLAN):

MINIMUM BARRIER LENGTH ON APPROACH PANEL IS 13'-4" WITH MINIMUM OF 21 R502E & R503E DOWELS WITH ACCOMPANYING APPROPRIATE PARAPET VERTICAL BARS. VERIFY APPROACH PARAPET LENGTH WITH ROADWAY DESIGNER.

REFER TO MEMO TO DESIGNERS #2020-01 FOR ADDITIONAL REQUIREMENTS REGARDING BARRIER PLACEMENT.

NOTES:

F.F. DENOTES FRONT FACE
B.F. DENOTES BACK FACE

Ⓐ SEE SHEET 2 OF 2 FOR DETAILS.

Ⓑ PLACE BAR ON TOP OF BOTTOM REINFORCEMENT MAT IN DECK.

Ⓒ STRUCTURAL TUBE RAIL CANTILEVER DIMENSIONS ARE BASED ON SUCCESSFUL CRASH TESTS AND SHOULD NOT BE MODIFIED.

Ⓓ MATCH GUTTERLINE ELEVATION.

REVISED:	CERTIFIED BY ____ LICENSED PROFESSIONAL ENGINEER DATE	TITLE: STRUCTURAL TUBE RAILING (DESIGN T-1) AND CONCRETE PARAPET (TYPE P-2, TL-4) INTEGRAL OR SEMI-INTEGRAL ABUTMENT WITH GUARDRAIL CONNECTION (WITH 2" CONCRETE WEARING COURSE)	CODE 51
APPROVED: APRIL 09, 2020 Kevin Western STATE BRIDGE ENGINEER	NAME: LIC. NO.	DES: DR: CHK: CHK: SHEET NO. OF SHEETS	FIG. 5-397.157(B) (1 OF 2)
		APPROVED:	BRIDGE NO.

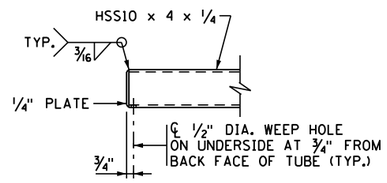

RAIL END DETAIL

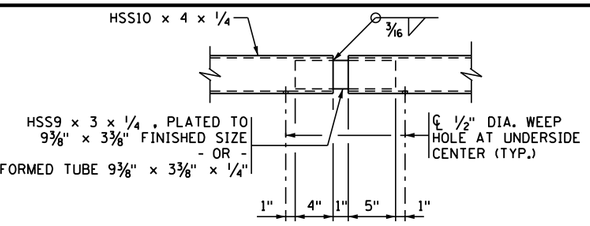

RAIL SLEEVE DETAIL

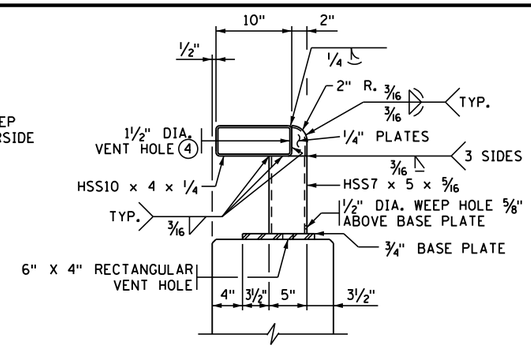

STRUCTURAL TUBE RAIL DETAIL

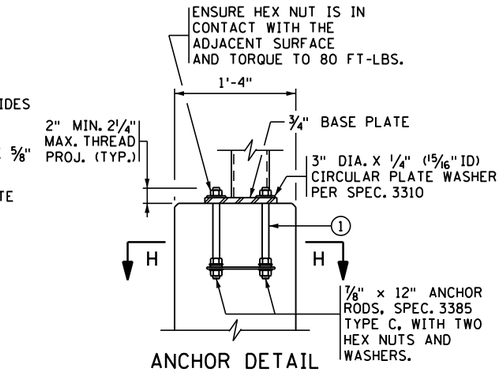

ANCHOR DETAIL

BILL OF REINFORCEMENT FOR PARAPET

BAR	NO.	LENGTH	SHAPE	LOCATION
R501E		5'-10"		PARAPET DOWEL
R502E		6'-0"		PARAPET DOWEL
R503E		6'-0"		PARAPET DOWEL
R504E		6'-1"		PARAPET VERTICAL
R505E		8'-7"		PARAPET VERTICAL
R506E	SER. OF 3	8'-1" TO 8'-5"		PARAPET VERTICAL
R507E		7'-9"		PARAPET VERTICAL
R508E		9'-1"		PARAPET LONGITUDINAL
R509E		2'-8"		PARAPET LONG. IN TAPER
R510E		2'-5"		PARAPET VERTICAL B.F.
R511E		3'-0"		PARAPET VERTICAL F.F.
R512E		4'-2"		VERTICAL @ BASE PLATE
R513E		4'-0"		LONGIT. @ BASE PLATE
R5__E				PARAPET LONGITUDINAL
R5__E				PARAPET LONGITUDINAL
R5__E				PARAPET LONGITUDINAL
R5__E				PARAPET LONGITUDINAL
R5__E				PARAPET LONGITUDINAL

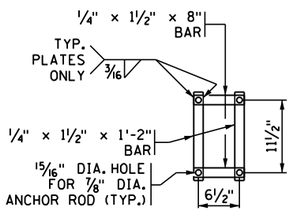

SECTION H-H

(ANCHOR BAR ALTERNATE)

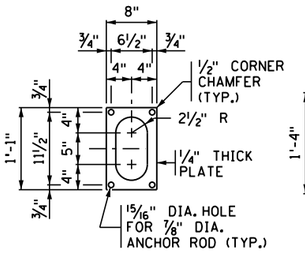

SECTION H-H

(ANCHOR PLATE ALTERNATE)

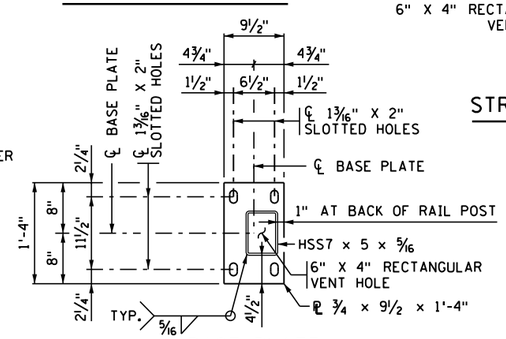

BASE PLATE

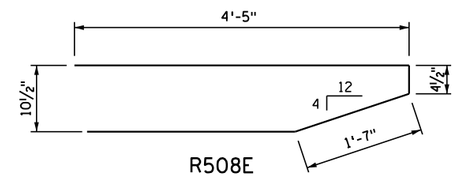

R508E

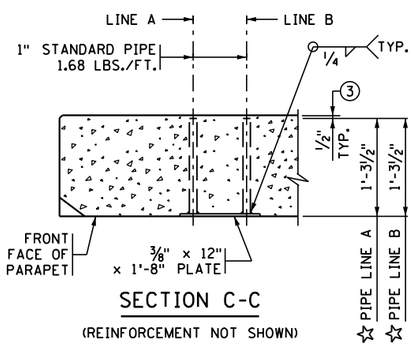

SECTION C-C

(REINFORCEMENT NOT SHOWN)

TRIM GUARDRAIL BOLTS SUCH THAT NO MORE THAN 1 1/2" PROTRUDES FROM BACK FACE OF PARAPET.

☆ DIMENSIONS INCLUDE 3/8" PLATE

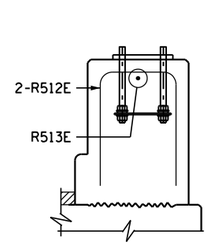

SECTION J-J

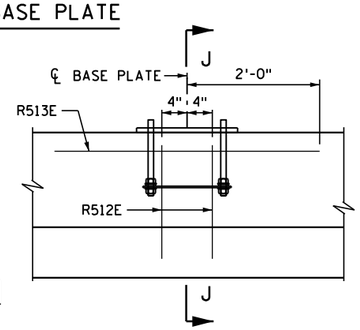

DETAIL "B"

(TYP. AT ALL RAIL POST ANCHORAGES)
(CONCRETE WEARING COURSE NOT SHOWN)

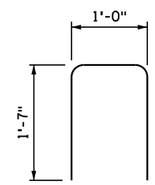

R512E

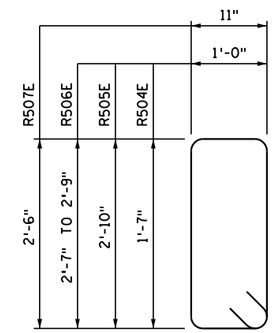

R504E, R505E, R506E, R507E

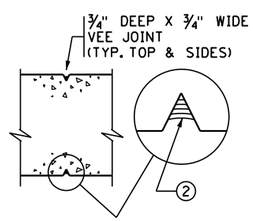

SECTION D-D

CONTROL JOINT DETAIL

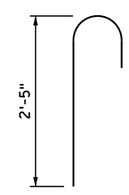

R511E

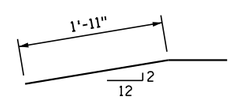

R509E

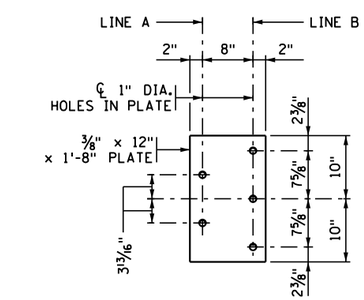

GUARDRAIL CONNECTION DETAIL

GALVANIZE AFTER FABRICATION PER SPEC. 3394
ESTIMATED WEIGHT = 37 LBS.

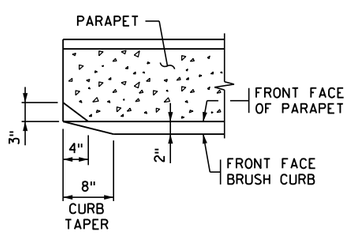

SECTION F-F

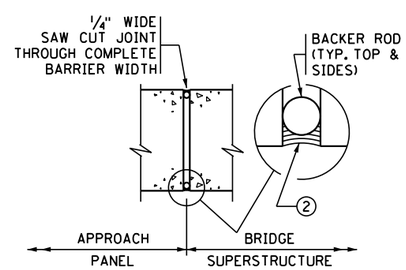

SECTION G-G

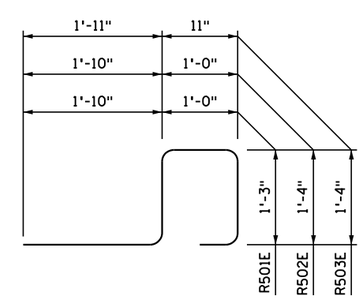

R501E, R502E, R503E

GENERAL NOTES

MEASURE PAYMENT LENGTH OF "TYPE P-2 (TL-4) BARRIER CONCRETE (3S52)" BETWEEN THE OUTSIDE ENDS OF THE PARAPET.
CONCRETE PARAPET = 381 LBS./FT. (0.094 CU. YDS./FT.)

MEASURE PAYMENT LENGTH OF "STRUCTURAL TUBE RAILING DESIGN T-1" FROM END TO END OF TUBING. DO NOT DEDUCT FOR JOINTS.

FINISH ALL EDGES OF PARAPET WITH 1/2" CHAMFER, EXCEPT WHERE OTHERWISE NOTED.

SPACE CONTROL JOINTS AT 10 FT. MAXIMUM. REFER TO SUPERSTRUCTURE SHEET FOR SPECIFIC SPACING INFORMATION.

PROVIDE CORRECT ALIGNMENT FOR ANCHORAGES BY PLACING THEM ACCURATELY AND NORMAL TO GRADE. SEE SPECIAL PROVISIONS.

INSTALL RAIL POSTS NORMAL TO GRADE.

PROVIDE STRUCTURAL STEEL AND PLATE WASHERS IN ACCORDANCE WITH SPEC. 3310. PROVIDE STRUCTURAL TUBES PER ASTM A500, GRADE B AS IN ACCORDANCE WITH SPEC. 3361.

GALVANIZE BOLTS, NUTS, AND WASHERS IN ACCORDANCE WITH SPEC. 3392.

GALVANIZE ALL OTHER STRUCTURAL STEEL IN ACCORDANCE WITH SPEC. 3394, AFTER FABRICATION.

GUARDRAIL CONNECTION TO BE STRUCTURAL STEEL IN ACCORDANCE WITH SPEC. 3306.

GUARDRAIL CONNECTION AND NAMEPLATE TO BE CONSIDERED INCIDENTAL.

PRICE BID FOR "STRUCTURAL TUBE RAILING DESIGN T-1" INCLUDES ANCHORAGES AND ALL MATERIAL ABOVE TOP OF CONCRETE PARAPET.

ALL MATERIAL IN THE CONCRETE PARAPET IS LISTED IN SUMMARY OF QUANTITIES FOR SUPERSTRUCTURE.

SEE SPECIAL PROVISIONS FOR COATING TO BE APPLIED TO METAL RAILING.

CONTINUOUSLY GROUND ALL METAL RAILINGS, SEE THE SPECIAL PROVISIONS. REFER TO THE ELECTRICAL PLANS AND ELECTRICAL SPECIAL PROVISIONS FOR DETAILS REGARDING BONDING MULTIPLE ELECTRICAL GROUNDING SYSTEMS.

(1) SUBSTITUTION OF ADHESIVE ANCHORAGE FOR CAST-IN-PLACE ANCHORAGE IS NOT PERMITTED.

(2) JOINT SEALANT PER MnDOT APPROVED/QUALIFIED PRODUCTS LIST - CRACK AND JOINT MATERIALS - SILICONE JOINT SEALERS.

(3) REMOVE CONCRETE FROM PIPE ENDS AFTER FORM REMOVAL.

(4) CENTER HOLE 1 1/4" FROM TOP OF TUBE.

CODE 51

FIG. 5-397.157(B) (2 OF 2)

REVISED:

APPROVED: APRIL 09, 2020
Kevin Western
STATE BRIDGE ENGINEER

CERTIFIED BY
LICENSED PROFESSIONAL ENGINEER DATE
NAME: LIC. NO.

TITLE: STRUCTURAL TUBE RAILING (DESIGN T-1) AND CONCRETE PARAPET (TYPE P-2, TL-4)
INTEGRAL OR SEMI-INTEGRAL ABUTMENT WITH GUARDRAIL CONNECTION (WITH 2" CONCRETE WEARING COURSE)

DES: DR: CHK: CHK:
SHEET NO. OF SHEETS

APPROVED:

BRIDGE NO.

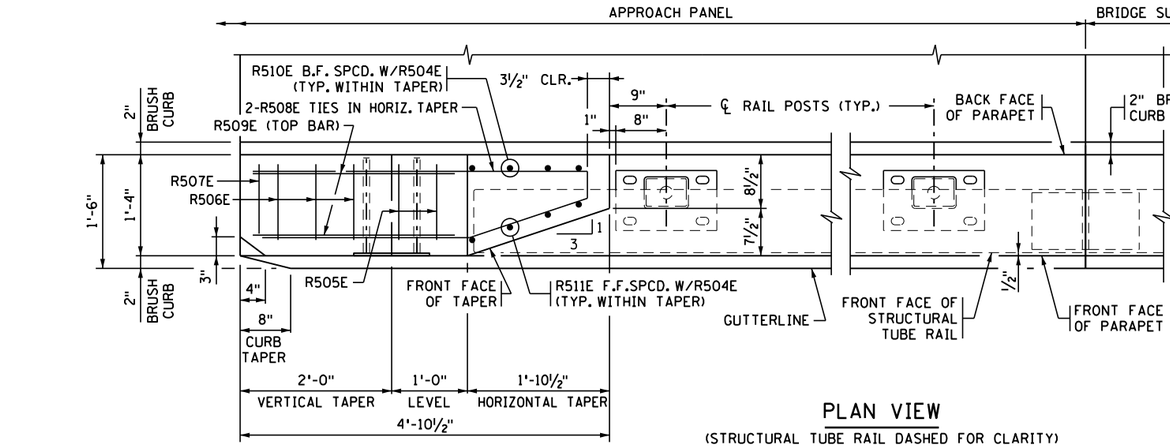

PLAN VIEW

(STRUCTURAL TUBE RAIL DASHED FOR CLARITY)

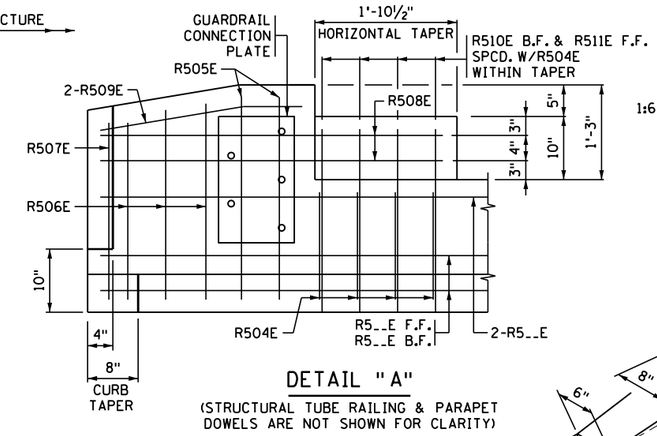

DETAIL "A"

(STRUCTURAL TUBE RAILING & PARAPET DOWELS ARE NOT SHOWN FOR CLARITY)

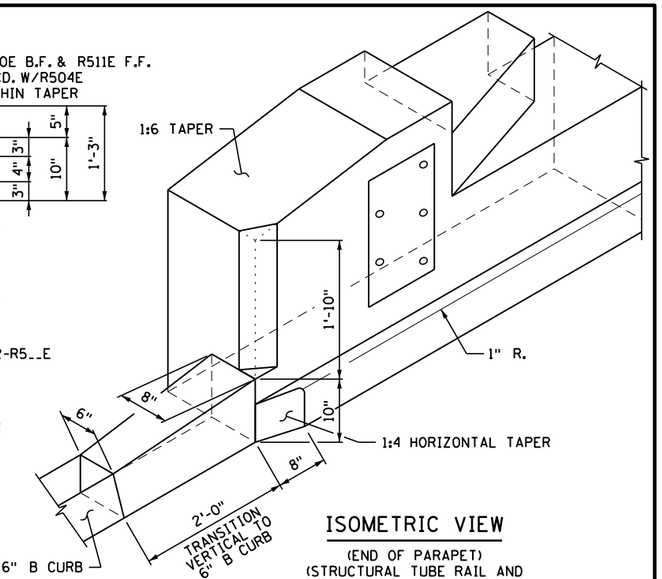

ISOMETRIC VIEW

(END OF PARAPET)
(STRUCTURAL TUBE RAIL AND BRIDGE SLAB SIDEWALK NOT SHOWN)

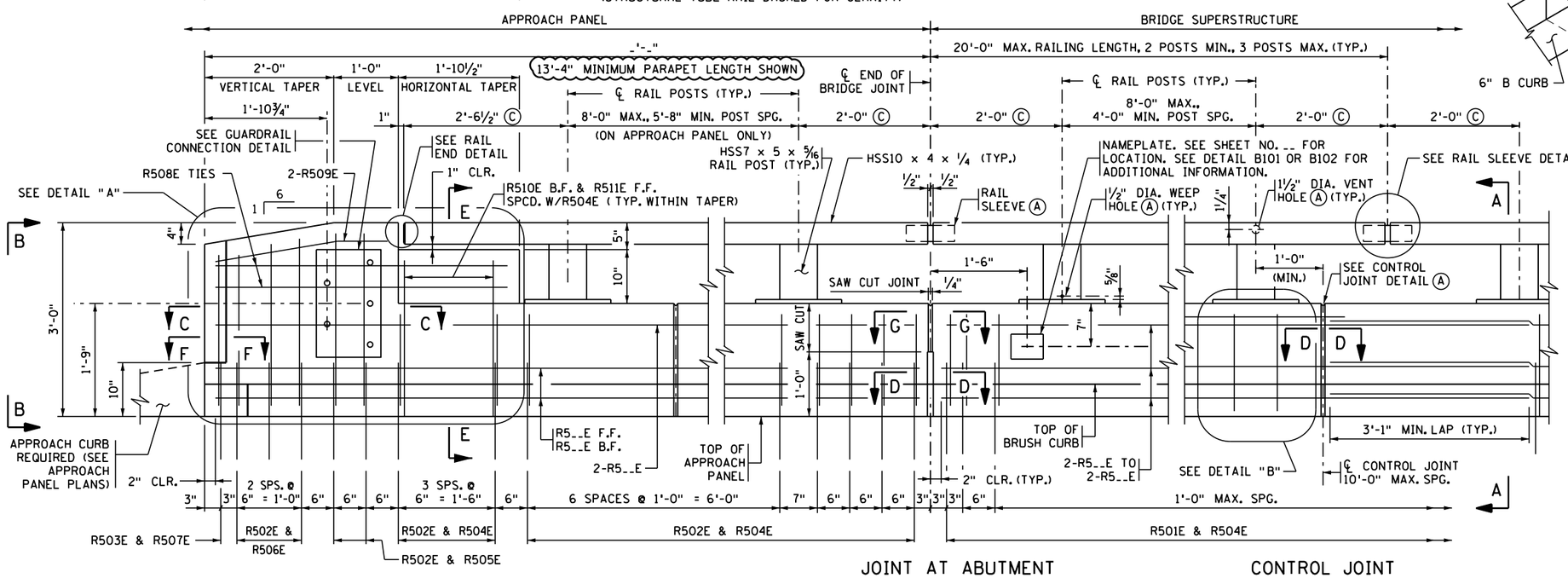

JOINT AT ABUTMENT

(INTEGRAL OR SEMI-INTEGRAL ABUTMENT)

CONTROL JOINT

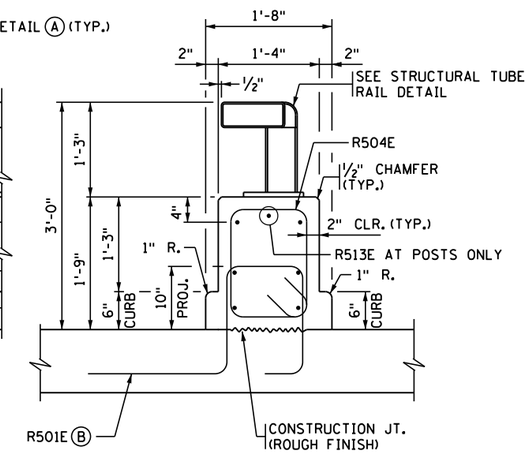

SECTION A-A

INSIDE ELEVATION OF PARAPET/RAILING

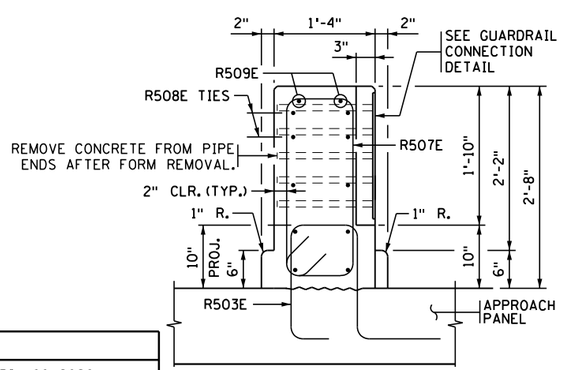

END VIEW B-B

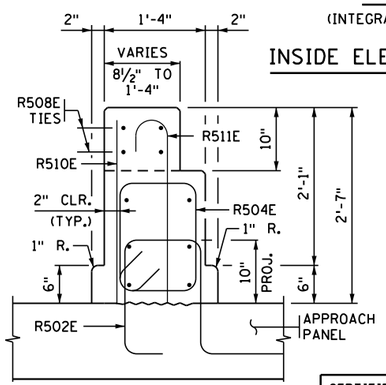

SECTION E-E

(STRUCTURAL TUBE RAIL NOT SHOWN)

DESIGNER NOTE
(REMOVE PRIOR TO PRINTING FINAL PLAN):

FOR BRIDGES WITH SUPERELEVATION EXCEEDING 2%, SHOW DIMENSIONS FOR BOTH THE FRONT AND BACK FACE OF THE PARAPET. ALSO VERIFY THAT BAR R501E HAS 10" MIN. PROJECTION WHEN CROSS SLOPE VARIES FROM NORMAL 0.02 FT/FT

PARAPET/RAILING COMBINATION MEETS TL-4 REQUIREMENTS OF NCHRP REPORT 350 ON BRIDGE DECK AND TL-3 ON APPROACH PANEL

DESIGNER NOTE
(REMOVE PRIOR TO PRINTING FINAL PLAN):

MINIMUM BARRIER LENGTH ON APPROACH PANEL IS 13'-4" WITH MINIMUM OF 21 R502E & R503E DOWELS WITH ACCOMPANYING APPROPRIATE PARAPET VERTICAL BARS. VERIFY APPROACH PARAPET LENGTH WITH ROADWAY DESIGNER.

REFER TO MEMO TO DESIGNERS #2020-01 FOR ADDITIONAL REQUIREMENTS REGARDING BARRIER PLACEMENT.

NOTES:

F.F. DENOTES FRONT FACE
B.F. DENOTES BACK FACE

(A) SEE SHEET 2 OF 2 FOR DETAILS.

(B) PLACE BAR ON TOP OF BOTTOM REINFORCEMENT MAT IN DECK.

(C) STRUCTURAL TUBE RAIL CANTILEVER DIMENSIONS ARE BASED ON SUCCESSFUL CRASH TESTS AND SHOULD NOT BE MODIFIED.

CODE 51

FIG. 5-397.157(C) (1 OF 2)

REVISED:

APPROVED: APRIL 09, 2020
Kevin Western
STATE BRIDGE ENGINEER

CERTIFIED BY _____ LICENSED PROFESSIONAL ENGINEER _____ DATE
NAME: LIC. NO.

TITLE: STRUCTURAL TUBE RAILING (DESIGN T-1) AND CONCRETE PARAPET (TYPE P-2, TL-4)
INTEGRAL OR SEMI-INTEGRAL ABUTMENT WITH BRIDGE SLAB SIDEWALK AND GUARDRAIL CONNECTION (WITHOUT CONCRETE WEARING COURSE)

DES: DR: CHK: CHK:

APPROVED:

SHEET NO. OF SHEETS

BRIDGE NO.

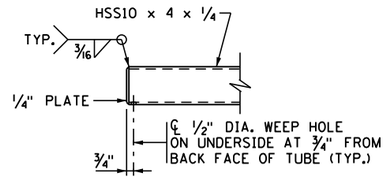

RAIL END DETAIL

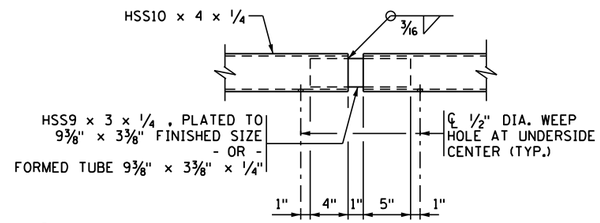

RAIL SLEEVE DETAIL

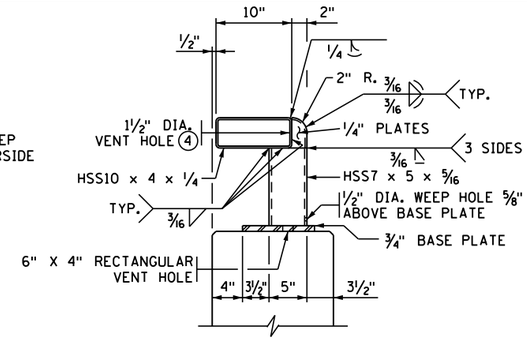

STRUCTURAL TUBE RAIL DETAIL

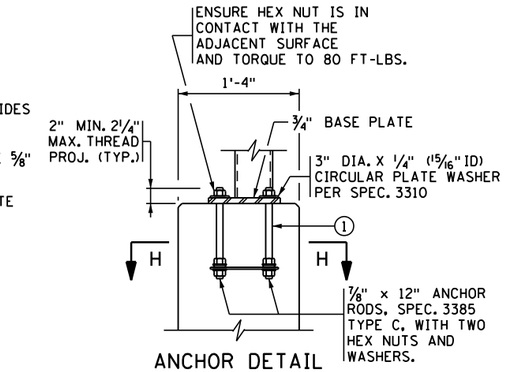

ANCHOR DETAIL

BILL OF REINFORCEMENT FOR PARAPET

BAR	NO.	LENGTH	SHAPE	LOCATION
R501E		6'-2"		PARAPET DOWEL
R502E		6'-4"		PARAPET DOWEL
R503E		6'-4"		PARAPET DOWEL
R504E		5'-9"		PARAPET VERTICAL
R505E		8'-3"		PARAPET VERTICAL
R506E	SER. OF 3	7'-9" TO 8'-1"		PARAPET VERTICAL
R507E		7'-5"		PARAPET VERTICAL
R508E		9'-1"		PARAPET LONGITUDINAL
R509E		2'-8"		PARAPET LONG. IN TAPER
R510E		2'-5"		PARAPET VERTICAL B.F.
R511E		3'-0"		PARAPET VERTICAL F.F.
R512E		3'-10"		VERTICAL @ BASE PLATE
R513E		4'-0"		LONGIT. @ BASE PLATE
R5__E				PARAPET LONGITUDINAL
R5__E				PARAPET LONGITUDINAL
R5__E				PARAPET LONGITUDINAL
R5__E				PARAPET LONGITUDINAL
R5__E				PARAPET LONGITUDINAL

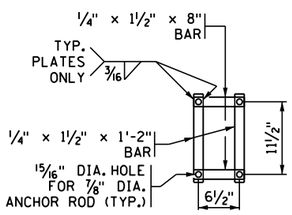

SECTION H-H

(ANCHOR BAR ALTERNATE)

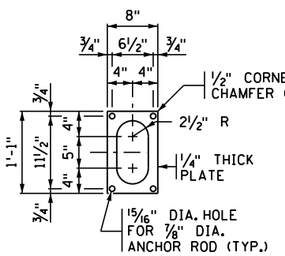

SECTION H-H

(ANCHOR PLATE ALTERNATE)

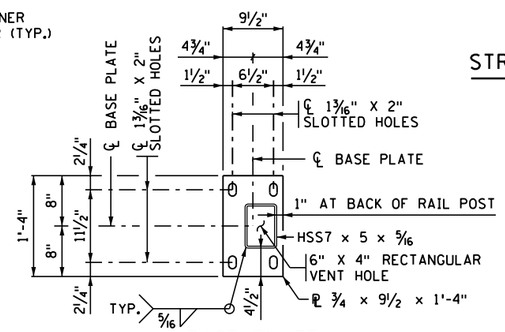

BASE PLATE

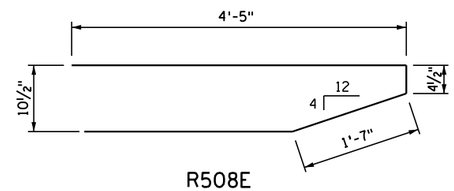

R508E

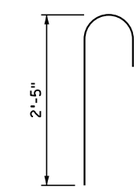

R511E

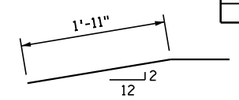

R509E

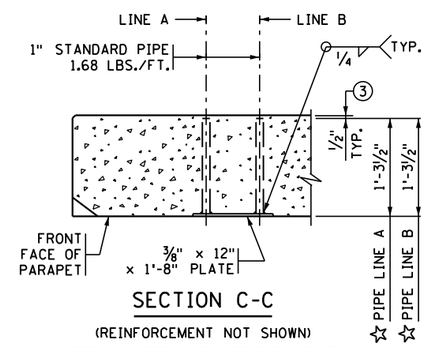

SECTION C-C

(REINFORCEMENT NOT SHOWN)

TRIM GUARDRAIL BOLTS SUCH THAT NO MORE THAN 1½" PROTRUDES FROM BACK FACE OF PARAPET.

☆ DIMENSIONS INCLUDE ⅜" PLATE

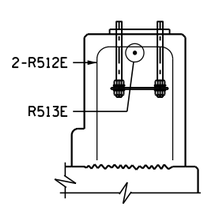

SECTION J-J

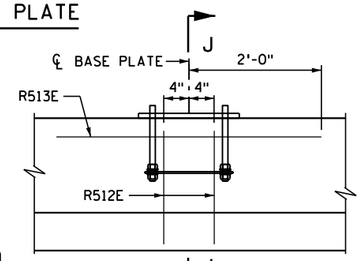

DETAIL "B"

(TYP. AT ALL RAIL POST ANCHORAGES

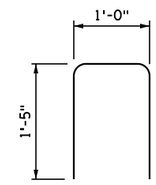

R512E

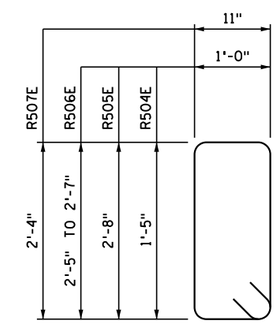

R504E, R505E, R506E, R507E

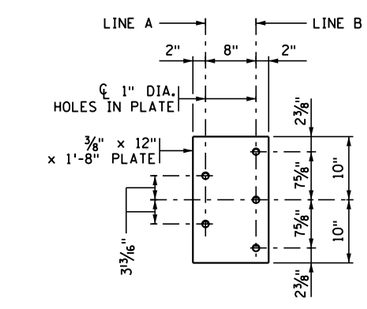

GUARDRAIL CONNECTION DETAIL

GALVANIZE AFTER FABRICATION PER SPEC. 3394
ESTIMATED WEIGHT = 37 LBS.

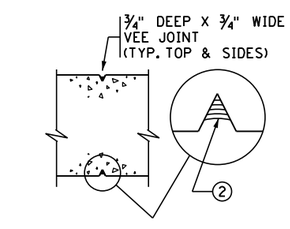

SECTION D-D

CONTROL JOINT DETAIL

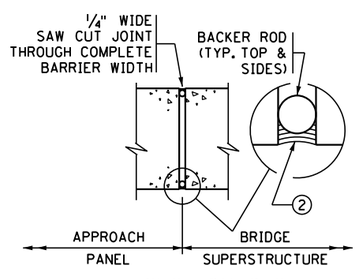

SECTION G-G

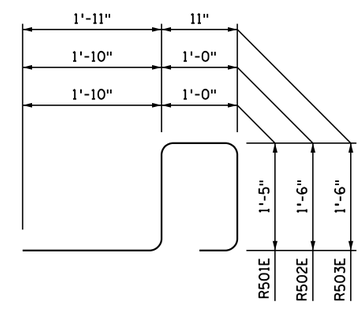

R501E, R502E, R503E

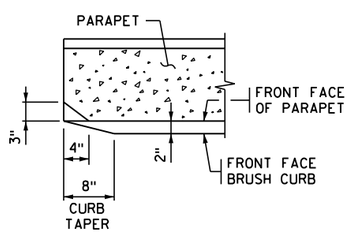

SECTION F-F

GENERAL NOTES

MEASURE PAYMENT LENGTH OF "TYPE P-2 (TL-4) BARRIER CONCRETE (3S52)" BETWEEN THE OUTSIDE ENDS OF THE PARAPET.
CONCRETE PARAPET = 374 LBS./FT. (0.092 CU. YDS./FT.)

MEASURE PAYMENT LENGTH OF "STRUCTURAL TUBE RAILING DESIGN T-1" FROM END TO END OF TUBING. DO NOT DEDUCT FOR JOINTS.

FINISH ALL EDGES OF PARAPET WITH ½" CHAMFER, EXCEPT WHERE OTHERWISE NOTED.

SPACE CONTROL JOINTS AT 10 FT. MAXIMUM. REFER TO SUPERSTRUCTURE SHEET FOR SPECIFIC SPACING INFORMATION.

PROVIDE CORRECT ALIGNMENT FOR ANCHORAGES BY PLACING THEM ACCURATELY AND NORMAL TO GRADE. SEE SPECIAL PROVISIONS.

PROVIDE STRUCTURAL STEEL AND PLATE WASHERS IN ACCORDANCE WITH SPEC. 3310. PROVIDE STRUCTURAL TUBES PER ASTM A500, GRADE B IN ACCORDANCE WITH SPEC. 3361.

INSTALL RAIL POSTS NORMAL TO GRADE.

GALVANIZE BOLTS, NUTS, AND WASHERS IN ACCORDANCE WITH SPEC. 3392.

GALVANIZE ALL OTHER STRUCTURAL STEEL IN ACCORDANCE WITH SPEC. 3394, AFTER FABRICATION.

GUARDRAIL CONNECTION TO BE STRUCTURAL STEEL PER SPEC. 3306.

GUARDRAIL CONNECTION AND NAMEPLATE TO BE CONSIDERED INCIDENTAL.

PRICE BID FOR "STRUCTURAL TUBE RAILING DESIGN T-1" INCLUDES ANCHORAGES AND ALL MATERIAL ABOVE TOP OF CONCRETE PARAPET.

ALL MATERIAL IN THE CONCRETE PARAPET IS LISTED IN SUMMARY OF QUANTITIES FOR SUPERSTRUCTURE.

SEE SPECIAL PROVISIONS FOR COATING TO BE APPLIED TO METAL RAILING.

CONTINUOUSLY GROUND ALL METAL RAILINGS, SEE THE SPECIAL PROVISIONS. REFER TO THE ELECTRICAL PLANS AND ELECTRICAL SPECIAL PROVISIONS FOR DETAILS REGARDING BONDING MULTIPLE ELECTRICAL GROUNDING SYSTEMS.

(1) SUBSTITUTION OF ADHESIVE ANCHORAGE FOR CAST-IN-PLACE ANCHORAGE IS NOT PERMITTED.

(2) JOINT SEALANT PER MnDOT APPROVED/QUALIFIED PRODUCTS LIST - CRACK AND JOINT MATERIALS - SILICONE JOINT SEALERS.

(3) REMOVE CONCRETE FROM PIPE ENDS AFTER FORM REMOVAL.

(4) CENTER HOLE 1¼" FROM TOP OF TUBE.

CODE 51

FIG. 5-397.157(C) (2 OF 2)

REVISED:

APPROVED: APRIL 09, 2020
Kevin Western
STATE BRIDGE ENGINEER

CERTIFIED BY _____ LICENSED PROFESSIONAL ENGINEER _____ DATE
NAME: LIC. NO.

TITLE: STRUCTURAL TUBE RAILING (DESIGN T-1) AND CONCRETE PARAPET (TYPE P-2, TL-4)
INTEGRAL OR SEMI-INTEGRAL ABUTMENT WITH BRIDGE SLAB SIDEWALK AND GUARDRAIL CONNECTION (WITHOUT CONCRETE WEARING COURSE)

DES: DR: CHK: CHK:

APPROVED:

SHEET NO. OF SHEETS

BRIDGE NO.

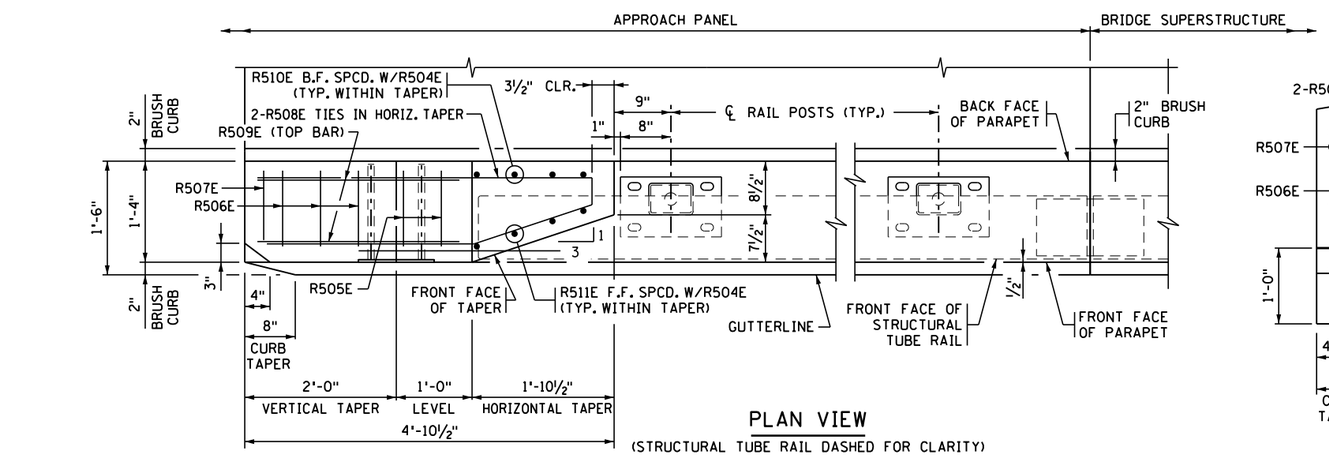

PLAN VIEW

(STRUCTURAL TUBE RAIL DASHED FOR CLARITY)

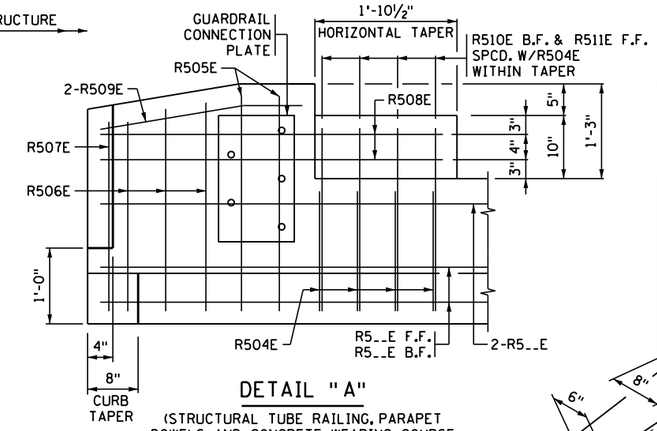

DETAIL "A"

(STRUCTURAL TUBE RAILING, PARAPET DOWELS AND CONCRETE WEARING COURSE ARE NOT SHOWN FOR CLARITY)

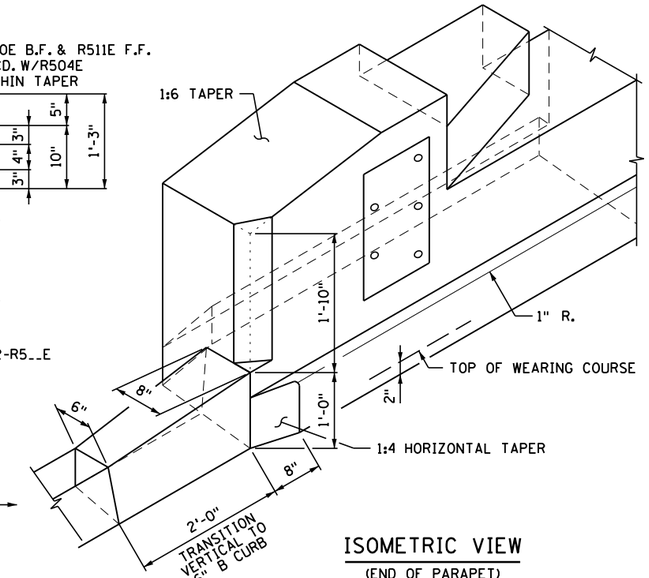

ISOMETRIC VIEW

(END OF PARAPET)
(STRUCTURAL TUBE RAIL, BRIDGE SLAB SIDEWALK AND CONCRETE WEARING COURSE NOT SHOWN)

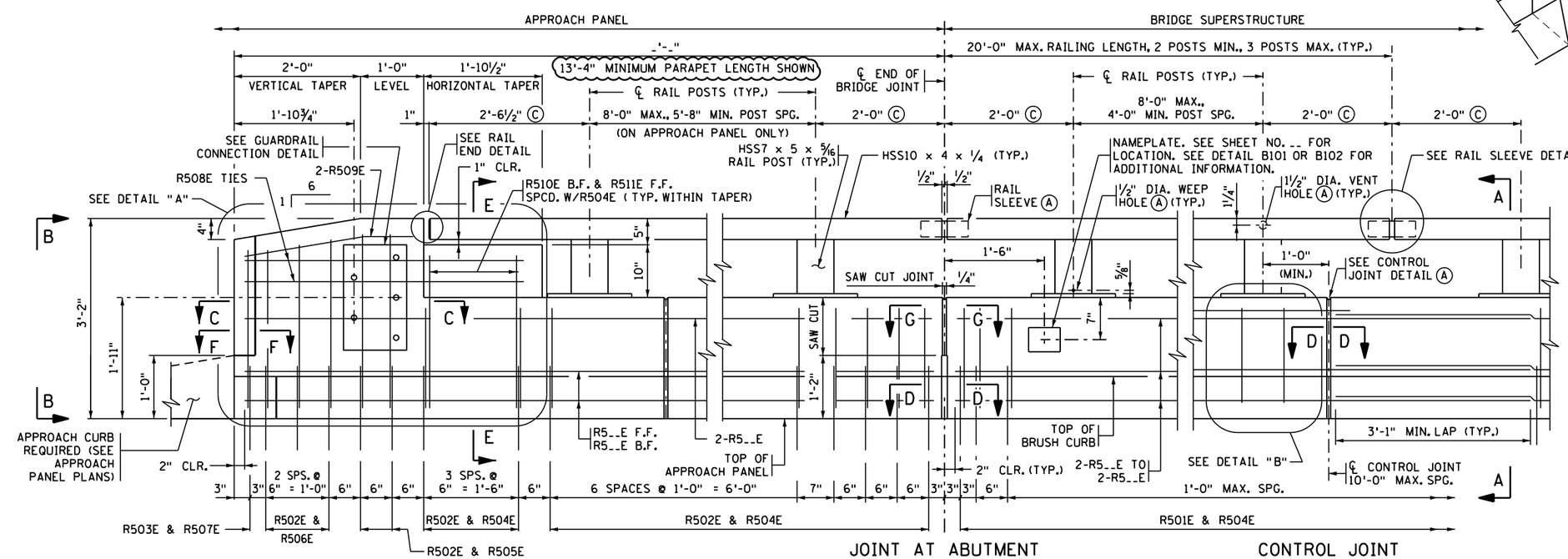

JOINT AT ABUTMENT

(INTEGRAL OR SEMI-INTEGRAL ABUTMENT)

CONTROL JOINT

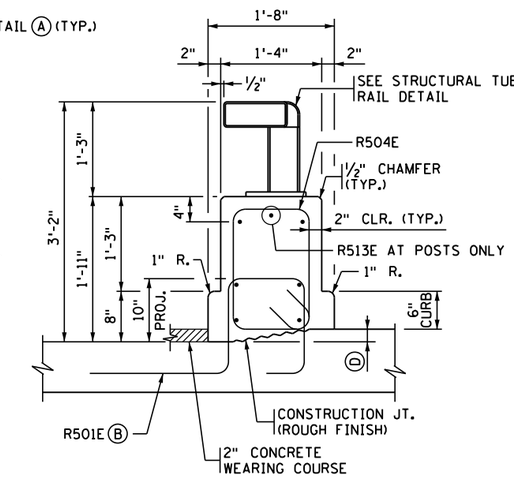

SECTION A-A

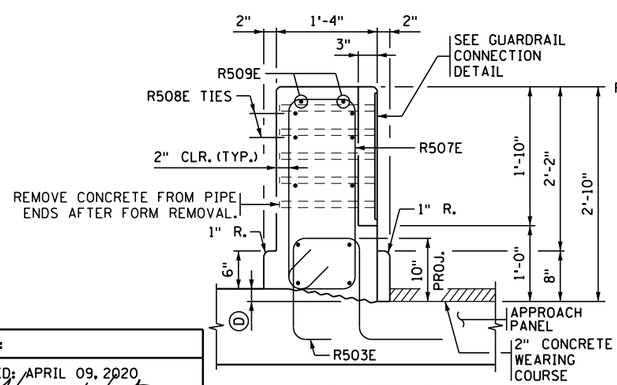

END VIEW B-B

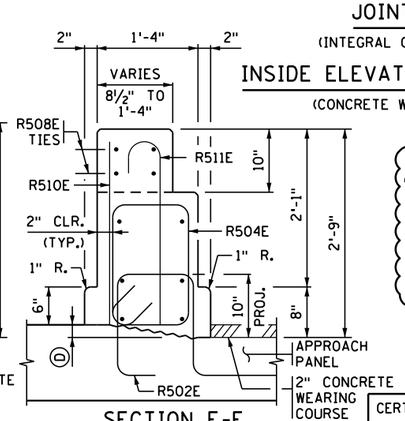

SECTION E-E

(STRUCTURAL TUBE RAIL NOT SHOWN)

INSIDE ELEVATION OF PARAPET/RAILING

(CONCRETE WEARING COURSE NOT SHOWN)

PARAPET/RAILING COMBINATION MEETS TL-4 REQUIREMENTS OF NCHRP REPORT 350 ON BRIDGE DECK AND TL-3 ON APPROACH PANEL

DESIGNER NOTE
(REMOVE PRIOR TO PRINTING FINAL PLAN):

FOR BRIDGES WITH SUPERELEVATION EXCEEDING 2%, SHOW DIMENSIONS FOR BOTH THE FRONT AND BACK FACE OF THE PARAPET. ALSO VERIFY THAT BAR R501E HAS 10" MIN. PROJECTION WHEN CROSS SLOPE VARIES FROM NORMAL 0.02 FT/FT

DESIGNER NOTE
(REMOVE PRIOR TO PRINTING FINAL PLAN):

MINIMUM BARRIER LENGTH ON APPROACH PANEL IS 13'-4" WITH MINIMUM OF 21 R502E & R503E DOWELS WITH ACCOMPANYING APPROPRIATE PARAPET VERTICAL BARS. VERIFY APPROACH PARAPET LENGTH WITH ROADWAY DESIGNER.

REFER TO MEMO TO DESIGNERS #2020-01 FOR ADDITIONAL REQUIREMENTS REGARDING BARRIER PLACEMENT.

NOTES:

F.F. DENOTES FRONT FACE
B.F. DENOTES BACK FACE

(A) SEE SHEET 2 OF 2 FOR DETAILS.

(B) PLACE BAR ON TOP OF BOTTOM REINFORCEMENT MAT IN DECK.

(C) STRUCTURAL TUBE RAIL CANTILEVER DIMENSIONS ARE BASED ON SUCCESSFUL CRASH TESTS AND SHOULD NOT BE MODIFIED.

(D) DIMENSIONS TO BE DETERMINED BASED ON THE BRIDGE DECK SLOPE.

CODE 51

FIG. 5-397.157(D) (1 OF 2)

REVISED:

APPROVED: APRIL 09, 2020
Kevin Western
STATE BRIDGE ENGINEER

CERTIFIED BY _____ LICENSED PROFESSIONAL ENGINEER _____ DATE
NAME: LIC. NO.

TITLE: STRUCTURAL TUBE RAILING (DESIGN T-1) AND CONCRETE PARAPET (TYPE P-2, TL-4)
INTEGRAL OR SEMI-INTEGRAL ABUTMENT WITH BRIDGE SLAB SIDEWALK AND GUARDRAIL CONNECTION (WITH 2" CONCRETE WEARING COURSE)

DES: DR: CHK: CHK:

APPROVED:

SHEET NO. OF SHEETS

BRIDGE NO.

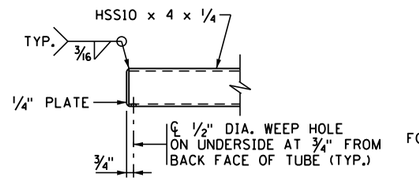

RAIL END DETAIL

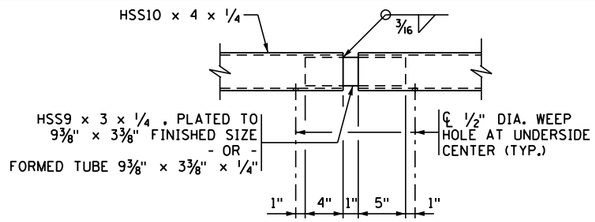

RAIL SLEEVE DETAIL

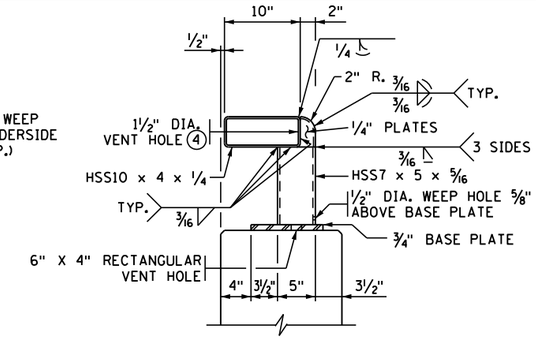

STRUCTURAL TUBE RAIL DETAIL

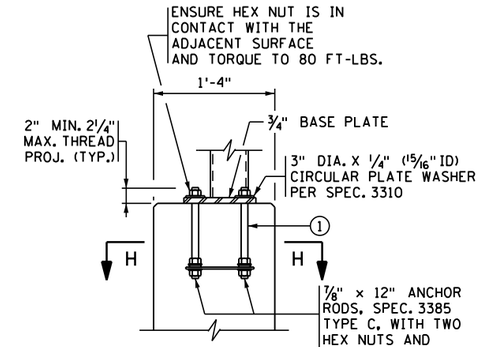

ANCHOR DETAIL

BILL OF REINFORCEMENT FOR PARAPET

BAR	NO.	LENGTH	SHAPE	LOCATION
R501E		5'-10"		PARAPET DOWEL
R502E		6'-0"		PARAPET DOWEL
R503E		6'-0"		PARAPET DOWEL
R504E		6'-1"		PARAPET VERTICAL
R505E		8'-7"		PARAPET VERTICAL
R506E	SER. OF 3	8'-1" TO 8'-5"		PARAPET VERTICAL
R507E		7'-9"		PARAPET VERTICAL
R508E		9'-1"		PARAPET LONGITUDINAL
R509E		2'-8"		PARAPET LONG. IN TAPER
R510E		2'-5"		PARAPET VERTICAL B.F.
R511E		3'-0"		PARAPET VERTICAL F.F.
R512E		4'-2"		VERTICAL @ BASE PLATE
R513E		4'-0"		LONGIT. @ BASE PLATE
R5__E				PARAPET LONGITUDINAL
R5__E				PARAPET LONGITUDINAL
R5__E				PARAPET LONGITUDINAL
R5__E				PARAPET LONGITUDINAL
R5__E				PARAPET LONGITUDINAL

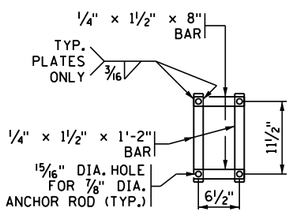

SECTION H-H

(ANCHOR BAR ALTERNATE)

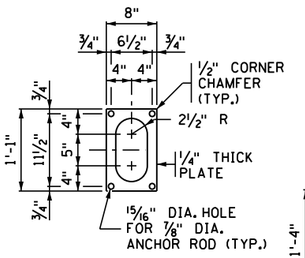

SECTION H-H

(ANCHOR PLATE ALTERNATE)

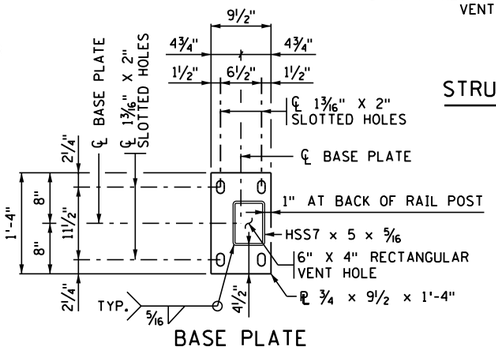

BASE PLATE

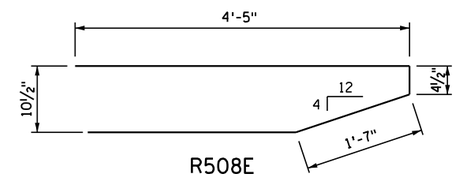

R508E

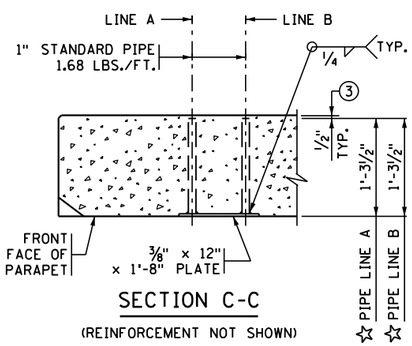

SECTION C-C

(REINFORCEMENT NOT SHOWN)

TRIM GUARDRAIL BOLTS SUCH THAT NO MORE THAN 1½" PROTRUDES FROM BACK FACE OF PARAPET.

☆ DIMENSIONS INCLUDE ⅜" PLATE

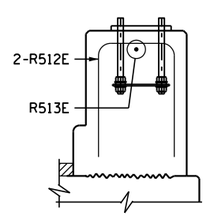

SECTION J-J

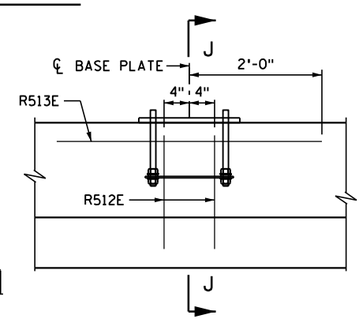

DETAIL "B"

(TYP. AT ALL RAIL POST ANCHORAGES)
(CONCRETE WEARING COURSE NOT SHOWN)

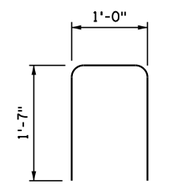

R512E

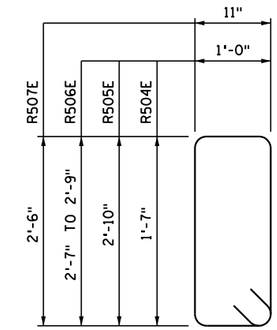

R504E, R505E, R506E, R507E

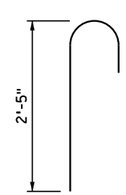

R511E

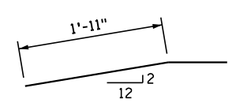

R509E

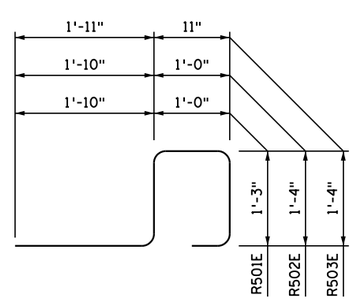

R501E, R502E, R503E

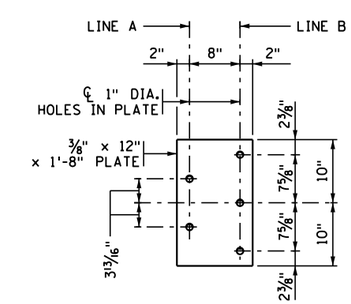

GUARDRAIL CONNECTION DETAIL

GALVANIZE AFTER FABRICATION PER SPEC. 3394
ESTIMATED WEIGHT = 37 LBS.

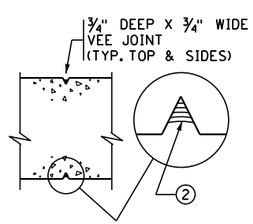

SECTION D-D

CONTROL JOINT DETAIL

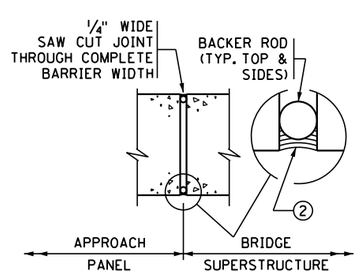

SECTION G-G

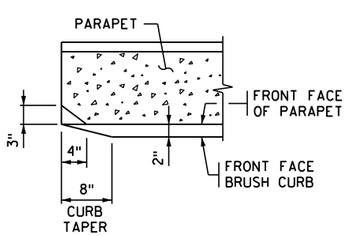

SECTION F-F

GENERAL NOTES

MEASURE PAYMENT LENGTH OF "TYPE P-2 (TL-4) BARRIER CONCRETE (3S52)" BETWEEN THE OUTSIDE ENDS OF THE PARAPET.
CONCRETE PARAPET = 395 LBS./FT. (0.098 CU. YDS./FT.)

MEASURE PAYMENT LENGTH OF "STRUCTURAL TUBE RAILING DESIGN T-1" FROM END TO END OF TUBING. DO NOT DEDUCT FOR JOINTS.

FINISH ALL EDGES OF PARAPET WITH ½" CHAMFER, EXCEPT WHERE OTHERWISE NOTED.

SPACE CONTROL JOINTS AT 10 FT. MAXIMUM. REFER TO SUPERSTRUCTURE SHEET FOR SPECIFIC SPACING INFORMATION.

PROVIDE CORRECT ALIGNMENT FOR ANCHORAGES BY PLACING THEM ACCURATELY AND NORMAL TO GRADE. SEE SPECIAL PROVISIONS.

INSTALL RAIL POSTS NORMAL TO GRADE.

PROVIDE STRUCTURAL STEEL AND PLATE WASHERS IN ACCORDANCE WITH SPEC. 3310. PROVIDE STRUCTURAL TUBES PER ASTM A500, GRADE B AS IN ACCORDANCE WITH SPEC. 3361.

GALVANIZE BOLTS, NUTS, AND WASHERS IN ACCORDANCE WITH SPEC. 3392.

GALVANIZE ALL OTHER STRUCTURAL STEEL IN ACCORDANCE WITH SPEC. 3394, AFTER FABRICATION.

GUARDRAIL CONNECTION TO BE STRUCTURAL STEEL IN ACCORDANCE WITH SPEC. 3306.

GUARDRAIL CONNECTION AND NAMEPLATE TO BE CONSIDERED INCIDENTAL.

PRICE BID FOR "STRUCTURAL TUBE RAILING DESIGN T-1" INCLUDES ANCHORAGES AND ALL MATERIAL ABOVE TOP OF CONCRETE PARAPET.

ALL MATERIAL IN THE CONCRETE PARAPET IS LISTED IN SUMMARY OF QUANTITIES FOR SUPERSTRUCTURE.

SEE SPECIAL PROVISIONS FOR COATING TO BE APPLIED TO METAL RAILING.

CONTINUOUSLY GROUND ALL METAL RAILINGS. SEE THE SPECIAL PROVISIONS. REFER TO THE ELECTRICAL PLANS AND ELECTRICAL SPECIAL PROVISIONS FOR DETAILS REGARDING BONDING MULTIPLE ELECTRICAL GROUNDING SYSTEMS.

(1) SUBSTITUTION OF ADHESIVE ANCHORAGE FOR CAST-IN-PLACE ANCHORAGE IS NOT PERMITTED.

(2) JOINT SEALANT PER MnDOT APPROVED/QUALIFIED PRODUCTS LIST - CRACK AND JOINT MATERIALS - SILICONE JOINT SEALERS.

(3) REMOVE CONCRETE FROM PIPE ENDS AFTER FORM REMOVAL.

(4) CENTER HOLE 1¼" FROM TOP OF TUBE.

CODE 51

FIG. 5-397.157(D) (2 OF 2)

REVISED:

APPROVED: APRIL 09, 2020
Kevin Western
STATE BRIDGE ENGINEER

CERTIFIED BY _____ LICENSED PROFESSIONAL ENGINEER _____ DATE
NAME: LIC. NO.

TITLE: STRUCTURAL TUBE RAILING (DESIGN T-1) AND CONCRETE PARAPET (TYPE P-2, TL-4)
INTEGRAL OR SEMI-INTEGRAL ABUTMENT WITH BRIDGE SLAB SIDEWALK AND GUARDRAIL CONNECTION (WITH 2" CONCRETE WEARING COURSE)

DES: DR:
CHK: CHK:
APPROVED:
SHEET NO. OF SHEETS
BRIDGE NO.

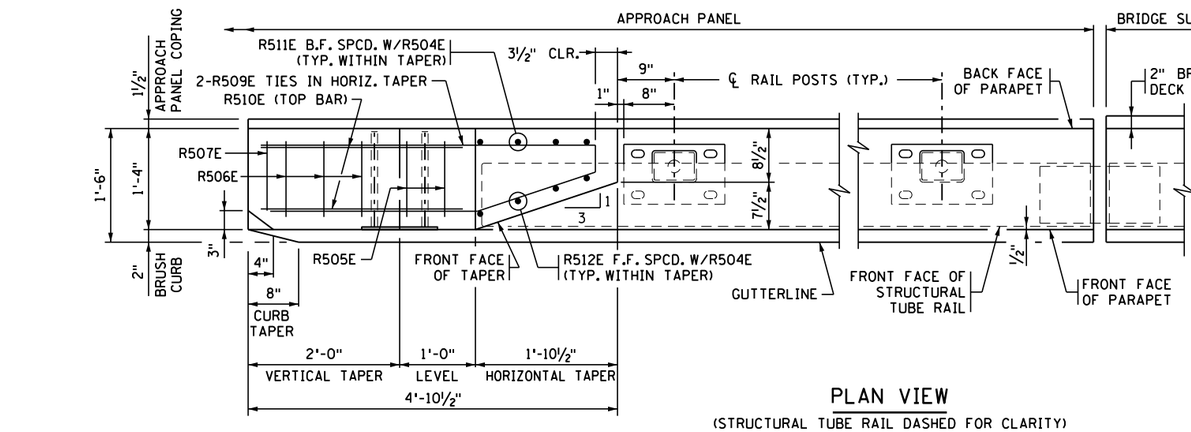

PLAN VIEW

(STRUCTURAL TUBE RAIL DASHED FOR CLARITY)

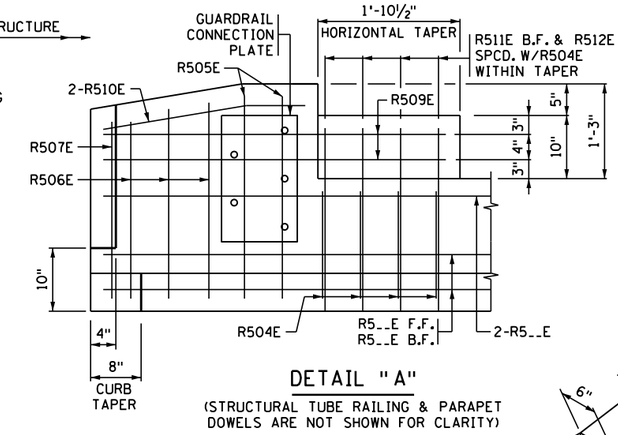

DETAIL "A"

(STRUCTURAL TUBE RAILING & PARAPET DOWELS ARE NOT SHOWN FOR CLARITY)

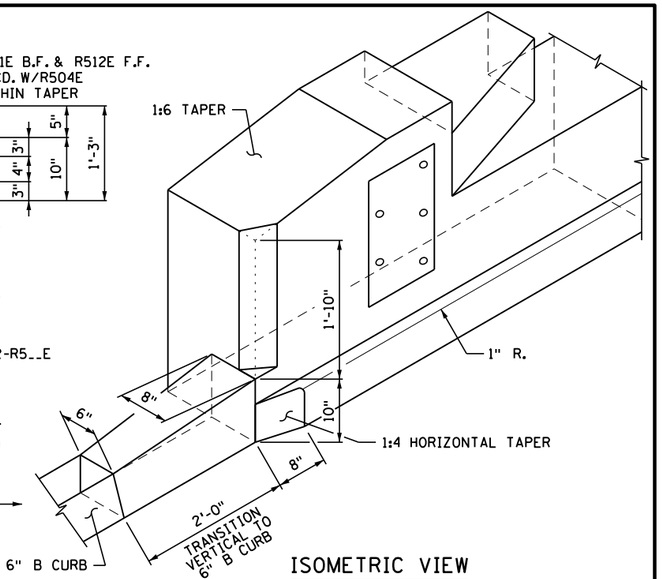

ISOMETRIC VIEW

(END OF PARAPET)
(STRUCTURAL TUBE RAIL NOT SHOWN)

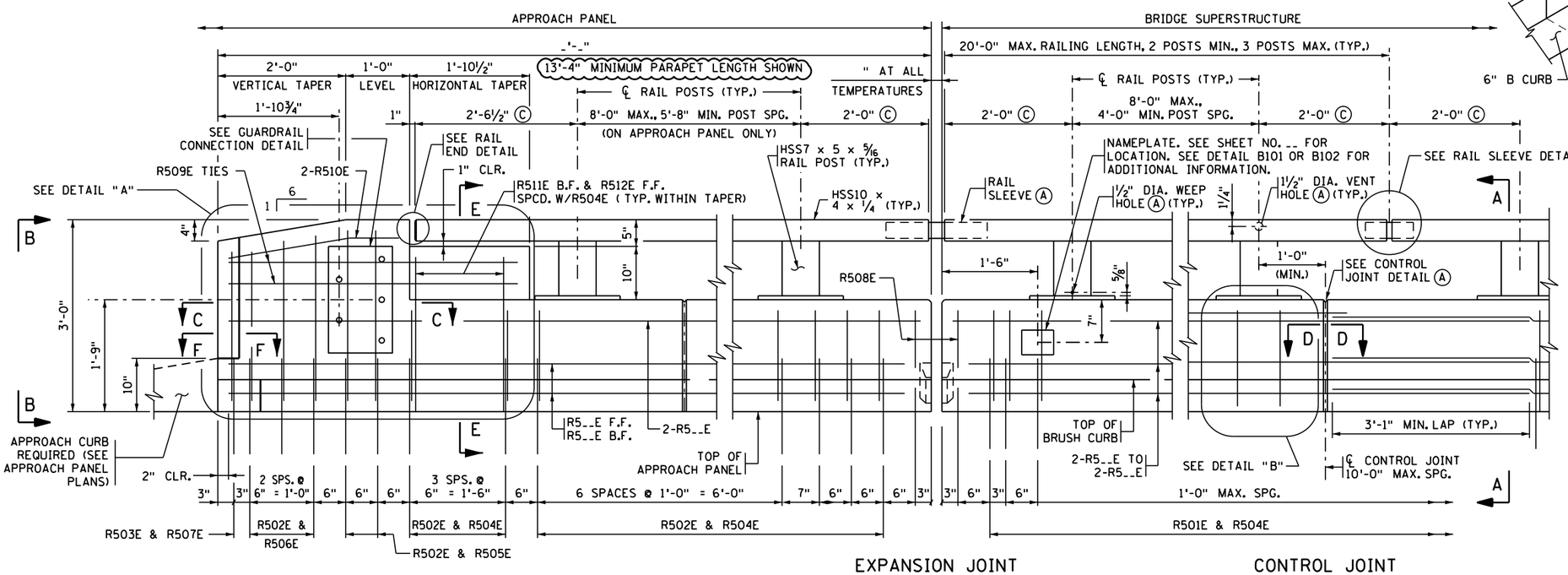

EXPANSION JOINT

(DEVICE NOT SHOWN)

CONTROL JOINT

INSIDE ELEVATION OF PARAPET/RAILING

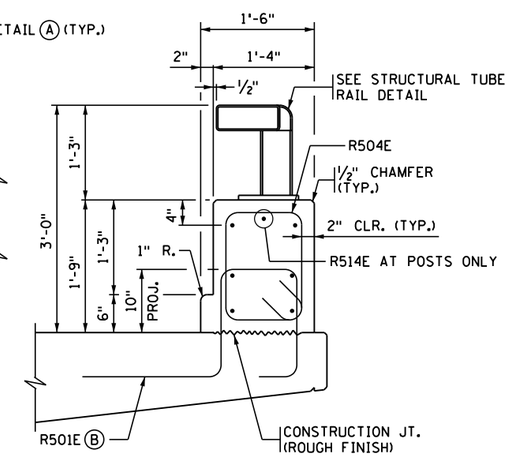

SECTION A-A

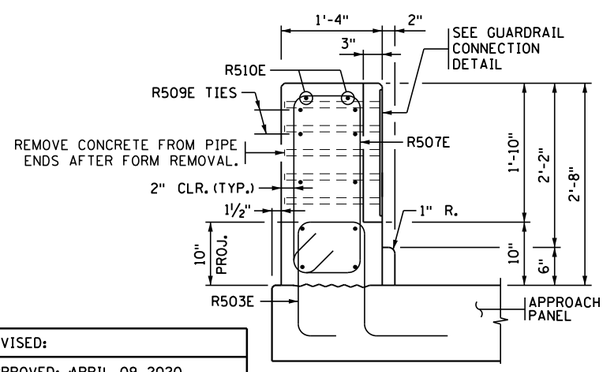

END VIEW B-B

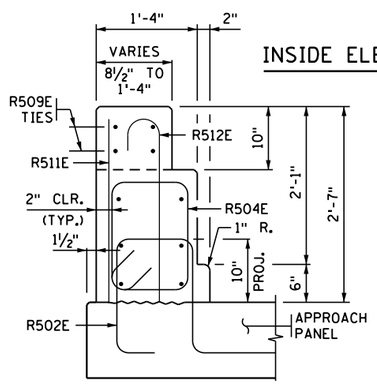

SECTION E-E

(STRUCTURAL TUBE RAIL NOT SHOWN)

PARAPET/RAILING COMBINATION MEETS TL-4 REQUIREMENTS OF NCHRP REPORT 350 ON BRIDGE DECK AND TL-3 ON APPROACH PANEL

DESIGNER NOTE
(REMOVE PRIOR TO PRINTING FINAL PLAN):

FOR BRIDGES WITH SUPERELEVATION EXCEEDING 2%, SHOW DIMENSIONS FOR BOTH THE FRONT AND BACK FACE OF THE PARAPET. ALSO VERIFY THAT BAR R501E HAS 10" MIN. PROJECTION WHEN CROSS SLOPE VARIES FROM NORMAL 0.02 FT/FT

DESIGNER NOTE
(REMOVE PRIOR TO PRINTING FINAL PLAN):

MINIMUM BARRIER LENGTH ON APPROACH PANEL IS 13'-4" WITH MINIMUM OF 20 R502E & R503E DOWELS WITH ACCOMPANYING APPROPRIATE PARAPET VERTICAL BARS. VERIFY APPROACH PARAPET LENGTH WITH ROADWAY DESIGNER.

REFER TO MEMO TO DESIGNERS #2020-01 FOR ADDITIONAL REQUIREMENTS REGARDING BARRIER PLACEMENT.

NOTES:

F.F. DENOTES FRONT FACE
B.F. DENOTES BACK FACE

Ⓐ SEE SHEET 2 OF 2 FOR DETAILS.

Ⓑ PLACE BAR ON TOP OF BOTTOM REINFORCEMENT MAT IN DECK.

Ⓒ STRUCTURAL TUBE RAIL CANTILEVER DIMENSIONS ARE BASED ON SUCCESSFUL CRASH TESTS AND SHOULD NOT BE MODIFIED.

CODE 51

FIG. 5-397.157(E) (1 OF 2)

REVISED:

APPROVED: APRIL 09, 2020
Kevin Western
STATE BRIDGE ENGINEER

CERTIFIED BY _____ LICENSED PROFESSIONAL ENGINEER _____ DATE
NAME: LIC. NO.

TITLE: STRUCTURAL TUBE RAILING (DESIGN T-1) AND CONCRETE PARAPET (TYPE P-2, TL-4)
PARAPET ABUTMENT WITH GUARDRAIL CONNECTION (WITHOUT CONCRETE WEARING COURSE)

DES: DR: CHK: CHK:

APPROVED:

SHEET NO. OF SHEETS

BRIDGE NO.

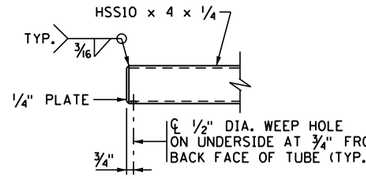

RAIL END DETAIL

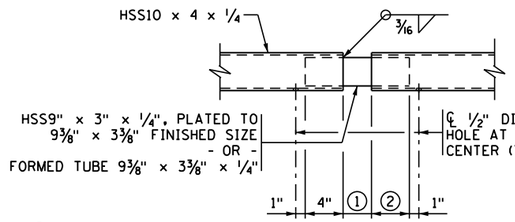

RAIL SLEEVE DETAIL

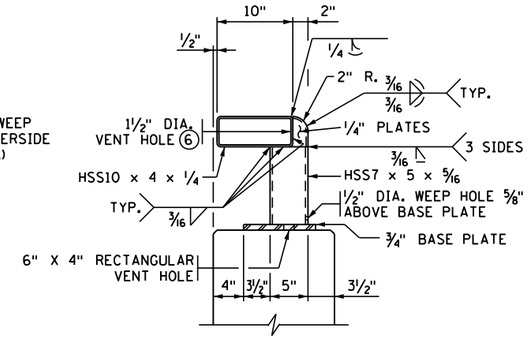

STRUCTURAL TUBE RAIL DETAIL

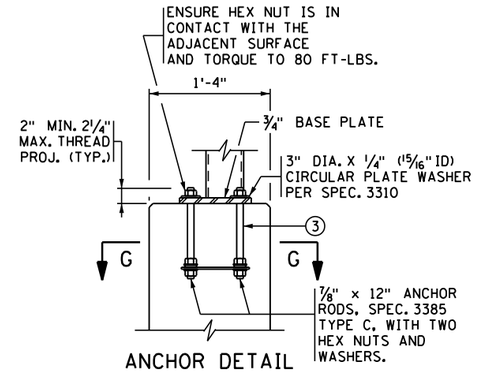

ANCHOR DETAIL

BILL OF REINFORCEMENT FOR PARAPET

BAR	NO.	LENGTH	SHAPE	LOCATION
R501E		6'-2"		PARAPET DOWEL
R502E		6'-4"		PARAPET DOWEL
R503E		6'-4"		PARAPET DOWEL
R504E		5'-9"		PARAPET VERTICAL
R505E		8'-3"		PARAPET VERTICAL
R506E	SER. OF 3	7'-9" TO 8'-1"		PARAPET VERTICAL
R507E		7'-5"		PARAPET VERTICAL
R508E		4'-5"		PARAPET VERTICAL
R509E		9'-1"		PARAPET LONGITUDINAL
R510E		2'-8"		PARAPET LONG. IN TAPER
R511E		2'-5"		PARAPET VERTICAL B.F.
R512E		3'-0"		PARAPET VERTICAL F.F.
R513E		3'-10"		VERTICAL @ BASE PLATE
R514E		4'-0"		LONGIT. @ BASE PLATE
R5__E				PARAPET LONGITUDINAL
R5__E				PARAPET LONGITUDINAL
R5__E				PARAPET LONGITUDINAL
R5__E				PARAPET LONGITUDINAL
R5__E				PARAPET LONGITUDINAL

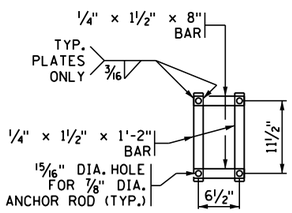

SECTION G-G

(ANCHOR BAR ALTERNATE)

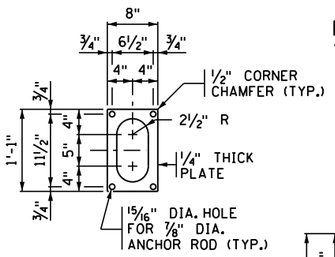

SECTION G-G

(ANCHOR PLATE ALTERNATE)

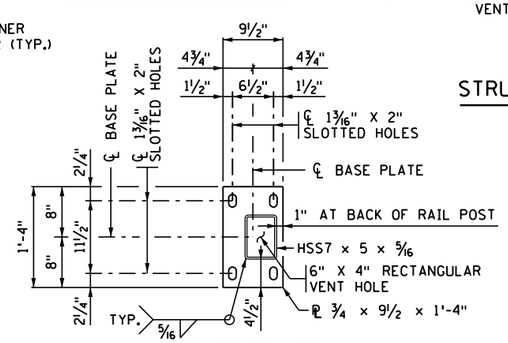

BASE PLATE

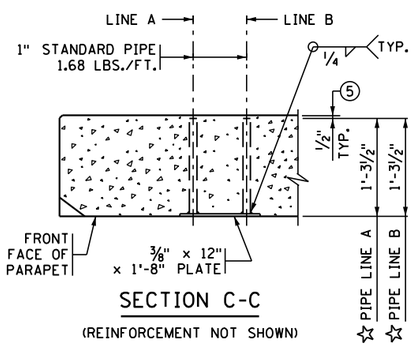

SECTION C-C

(REINFORCEMENT NOT SHOWN)

TRIM GUARDRAIL BOLTS SUCH THAT NO MORE THAN 1½" PROTRUDES FROM BACK FACE OF PARAPET.

☆ DIMENSIONS INCLUDE ⅜" PLATE

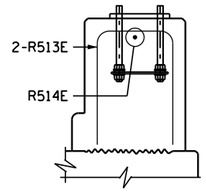

SECTION H-H

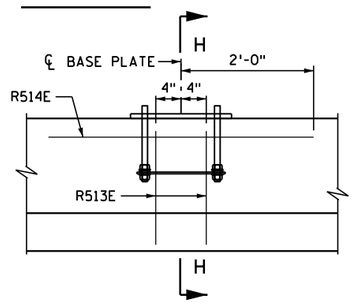

DETAIL "B"

(TYP. AT ALL RAIL POST ANCHORAGES

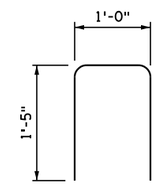

R513E

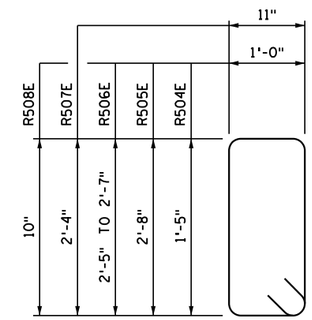

R504E, R505E, R506E, R507E, R508E

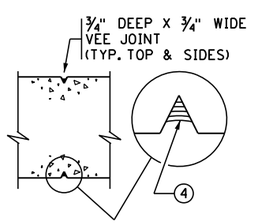

SECTION D-D

CONTROL JOINT DETAIL

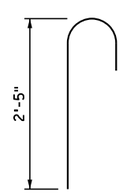

R512E

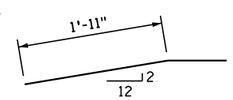

R510E

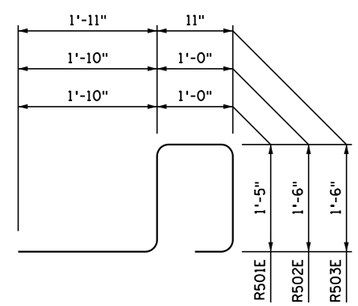

R501E, R502E, R503E

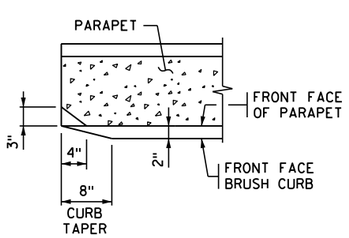

SECTION F-F

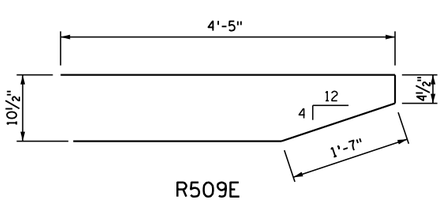

R509E

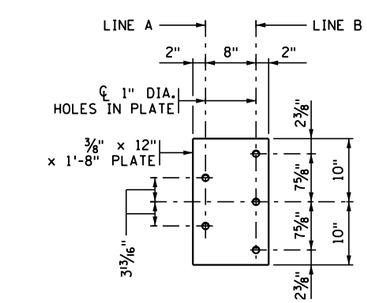

GUARDRAIL CONNECTION DETAIL

GALVANIZE AFTER FABRICATION PER SPEC. 3394
ESTIMATED WEIGHT = 37 LBS.

GENERAL NOTES

MEASURE PAYMENT LENGTH OF "TYPE P-2 (TL-4) BARRIER CONCRETE (3S52)" BETWEEN THE OUTSIDE ENDS OF THE PARAPET.
CONCRETE PARAPET = 362 LBS./FT. (0.090 CU. YDS./FT.)

MEASURE PAYMENT LENGTH OF "STRUCTURAL TUBE RAILING DESIGN T-1" FROM END TO END OF TUBING. DO NOT DEDUCT FOR JOINTS.

FINISH ALL EDGES OF PARAPET WITH ½" CHAMFER, EXCEPT WHERE OTHERWISE NOTED.

SPACE CONTROL JOINTS AT 10 FT. MAXIMUM. REFER TO SUPERSTRUCTURE SHEET FOR SPECIFIC SPACING INFORMATION.

PROVIDE CORRECT ALIGNMENT FOR ANCHORAGES BY PLACING THEM ACCURATELY AND NORMAL TO GRADE. SEE SPECIAL PROVISIONS.

INSTALL RAIL POSTS NORMAL TO GRADE.

PROVIDE STRUCTURAL STEEL AND PLATE WASHERS IN ACCORDANCE WITH SPEC. 3310. PROVIDE STRUCTURAL TUBES PER ASTM A500, GRADE B IN ACCORDANCE WITH SPEC. 3361.

GALVANIZE BOLTS, NUTS, AND WASHERS IN ACCORDANCE WITH SPEC. 3392.

GALVANIZE ALL OTHER STRUCTURAL STEEL IN ACCORDANCE WITH SPEC. 3394, AFTER FABRICATION.

GUARDRAIL CONNECTION TO BE STRUCTURAL STEEL IN ACCORDANCE WITH SPEC. 3306.

GUARDRAIL CONNECTION AND NAMEPLATE TO BE CONSIDERED INCIDENTAL.

PRICE BID FOR "STRUCTURAL TUBE RAILING DESIGN T-1" INCLUDES ANCHORAGES AND ALL MATERIAL ABOVE TOP OF CONCRETE PARAPET.

ALL MATERIAL IN THE CONCRETE PARAPET IS LISTED IN SUMMARY OF QUANTITIES FOR SUPERSTRUCTURE.

SEE SPECIAL PROVISIONS FOR COATING TO BE APPLIED TO METAL RAILING.

CONTINUOUSLY GROUND ALL METAL RAILINGS, SEE THE SPECIAL PROVISIONS. REFER TO THE ELECTRICAL PLANS AND ELECTRICAL SPECIAL PROVISIONS FOR DETAILS REGARDING BONDING MULTIPLE ELECTRICAL GROUNDING SYSTEMS.

1. 1" AT RAILING JOINTS. AT EXPANSION JOINTS, MAKE 1" LARGER THAN GAP IN EXPANSION JOINT.
2. 5" AT RAILING JOINTS AND 8" AT EXPANSION JOINTS.
3. SUBSTITUTION OF ADHESIVE ANCHORAGE FOR CAST-IN-PLACE ANCHORAGE IS NOT PERMITTED.
4. JOINT SEALANT PER MnDOT APPROVED/QUALIFIED PRODUCTS LIST - CRACK AND JOINT MATERIALS - SILICONE JOINT SEALERS.
5. REMOVE CONCRETE FROM PIPE ENDS AFTER FORM REMOVAL.
6. CENTER HOLES 1¼" FROM TOP OF TUBE.

CODE 51

FIG. 5-397.157(E) (2 OF 2)

REVISED:

APPROVED: APRIL 09, 2020
Kevin Western
STATE BRIDGE ENGINEER

CERTIFIED BY _____ LICENSED PROFESSIONAL ENGINEER _____ DATE
NAME: LIC. NO.

TITLE: STRUCTURAL TUBE RAILING (DESIGN T-1) AND CONCRETE PARAPET (TYPE P-2, TL-4)
PARAPET ABUTMENT WITH GUARDRAIL CONNECTION (WITHOUT CONCRETE WEARING COURSE)

DES: DR: CHK: CHK:

APPROVED:

SHEET NO. OF SHEETS

BRIDGE NO.

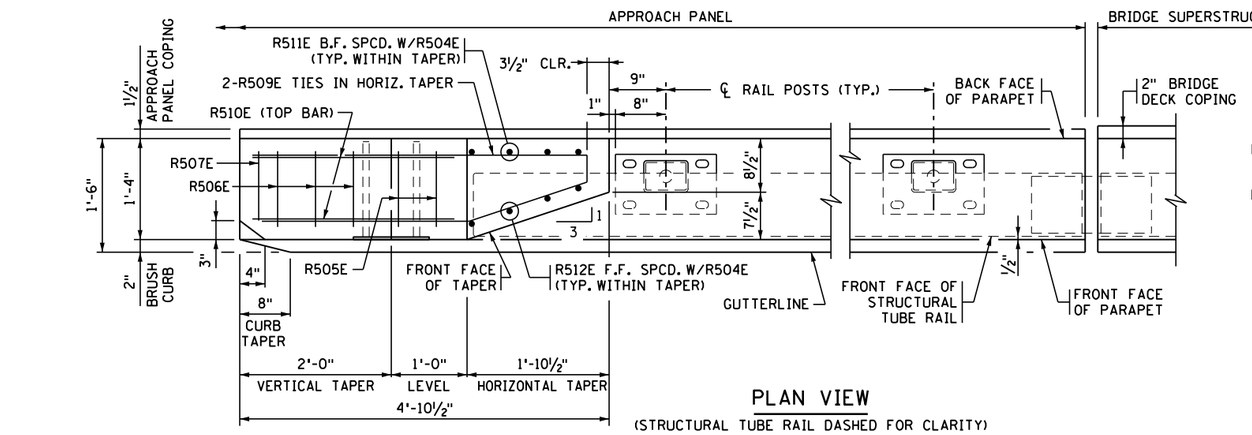

PLAN VIEW

(STRUCTURAL TUBE RAIL DASHED FOR CLARITY)

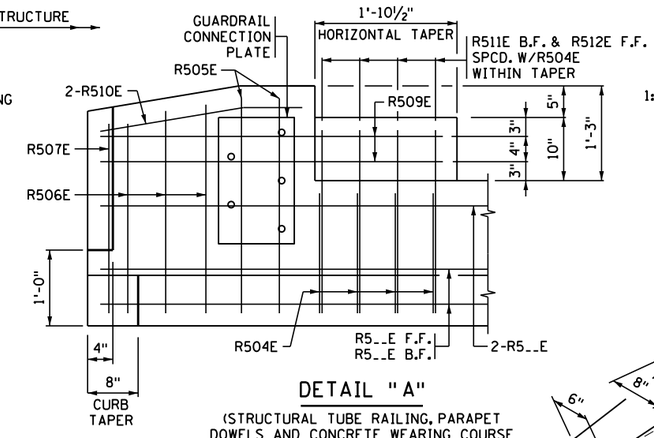

DETAIL "A"

(STRUCTURAL TUBE RAILING, PARAPET DOWELS AND CONCRETE WEARING COURSE ARE NOT SHOWN FOR CLARITY)

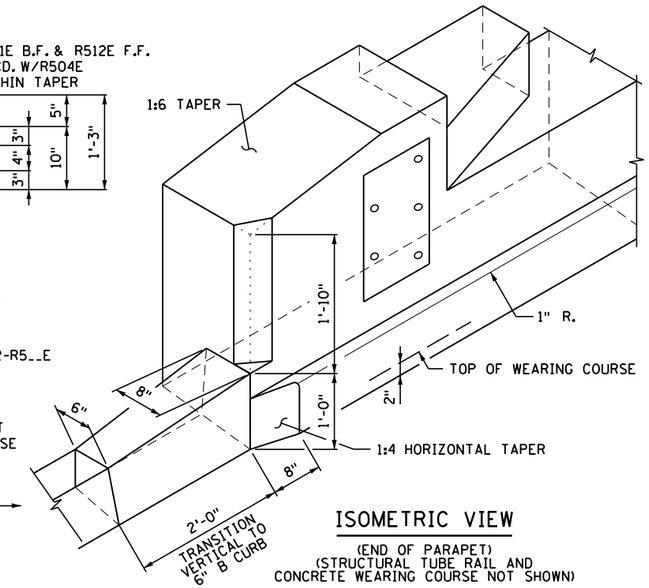

ISOMETRIC VIEW

(END OF PARAPET)
(STRUCTURAL TUBE RAIL AND CONCRETE WEARING COURSE NOT SHOWN)

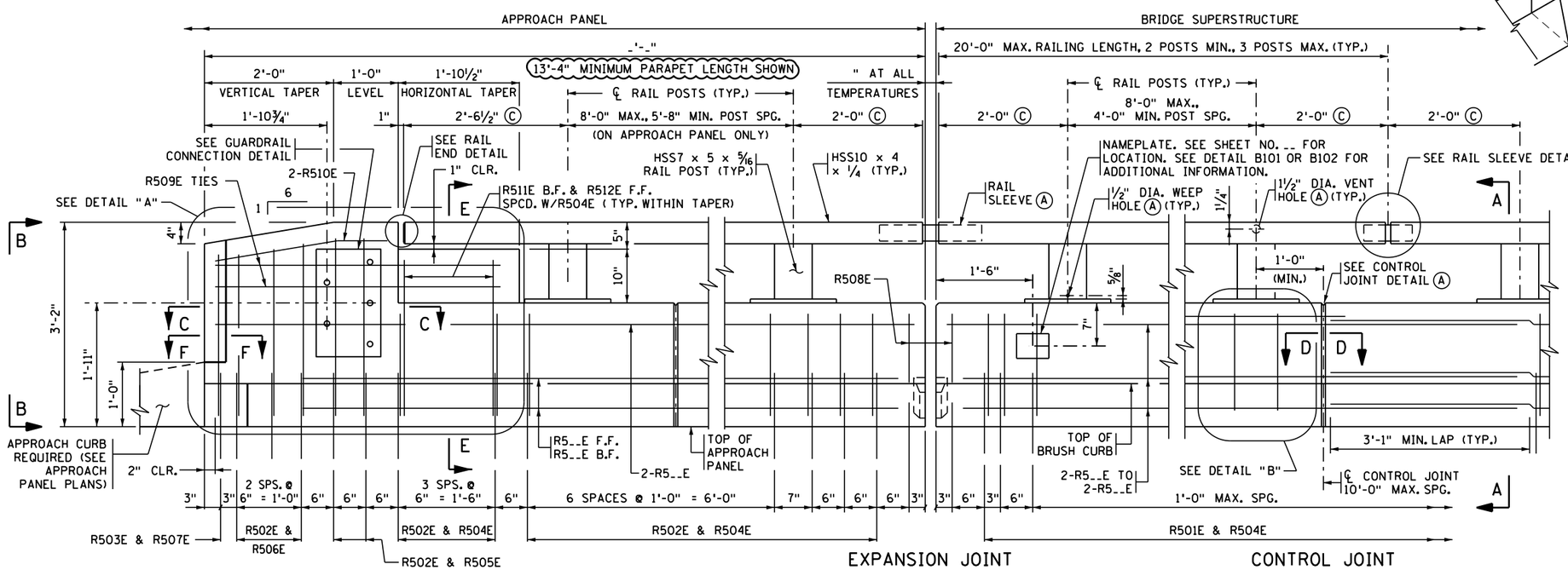

EXPANSION JOINT

(DEVICE NOT SHOWN)

CONTROL JOINT

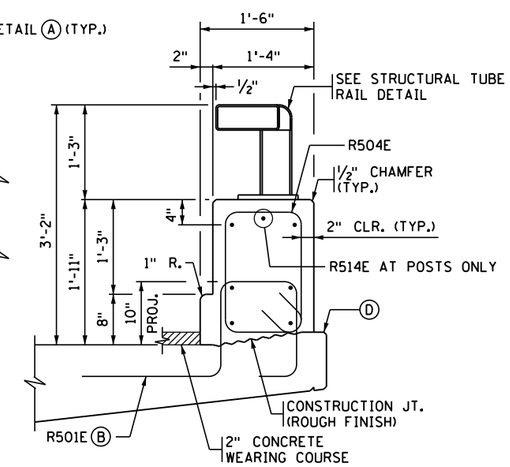

SECTION A-A

INSIDE ELEVATION OF PARAPET/RAILING

(CONCRETE WEARING COURSE NOT SHOWN)

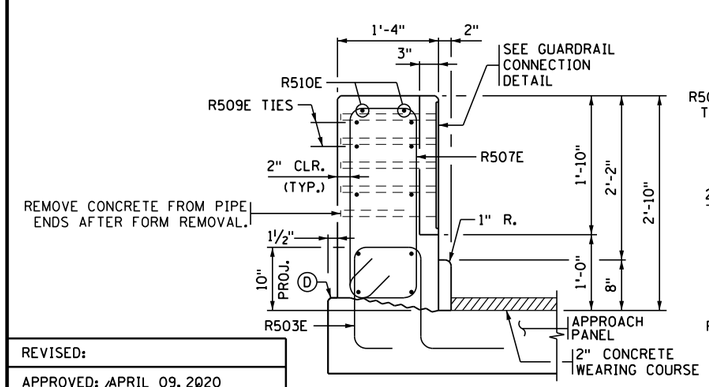

END VIEW B-B

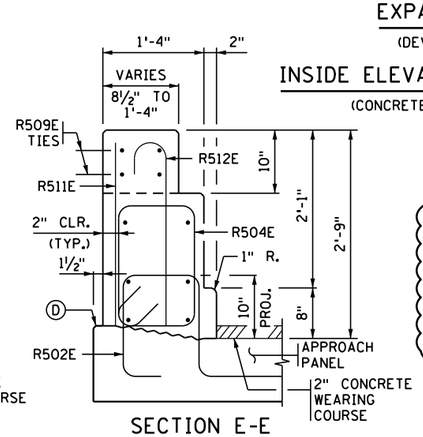

SECTION E-E

(STRUCTURAL RAIL TUBE NOT SHOWN)

PARAPET/RAILING COMBINATION MEETS TL-4 REQUIREMENTS OF NCHRP REPORT 350 ON BRIDGE DECK AND TL-3 ON APPROACH PANEL

DESIGNER NOTE
(REMOVE PRIOR TO PRINTING FINAL PLAN):

FOR BRIDGES WITH SUPERELEVATION EXCEEDING 2%, SHOW DIMENSIONS FOR BOTH THE FRONT AND BACK FACE OF THE PARAPET. ALSO VERIFY THAT BAR R501E HAS 10" MIN. PROJECTION WHEN CROSS SLOPE VARIES FROM NORMAL 0.02 FT/FT

DESIGNER NOTE
(REMOVE PRIOR TO PRINTING FINAL PLAN):

MINIMUM BARRIER LENGTH ON APPROACH PANEL IS 13'-4" WITH MINIMUM OF 20 R502E & R503E DOWELS WITH ACCOMPANYING APPROPRIATE PARAPET VERTICAL BARS. VERIFY APPROACH PARAPET LENGTH WITH ROADWAY DESIGNER. REFER TO MEMO TO DESIGNERS #2020-01 FOR ADDITIONAL REQUIREMENTS REGARDING BARRIER PLACEMENT.

NOTES:

F.F. DENOTES FRONT FACE
B.F. DENOTES BACK FACE

Ⓐ SEE SHEET 2 OF 2 FOR DETAILS.

Ⓑ PLACE BAR ON TOP OF BOTTOM REINFORCEMENT MAT IN DECK.

Ⓒ STRUCTURAL TUBE RAIL CANTILEVER DIMENSIONS ARE BASED ON SUCCESSFUL CRASH TESTS AND SHOULD NOT BE MODIFIED.

Ⓓ MATCH GUTTERLINE ELEVATION.

REVISED:

APPROVED: APRIL 09, 2020
Kevin Western
STATE BRIDGE ENGINEER

CERTIFIED BY _____ LICENSED PROFESSIONAL ENGINEER _____ DATE
NAME: LIC. NO.

TITLE: STRUCTURAL TUBE RAILING (DESIGN T-1) AND CONCRETE PARAPET (TYPE P-2, TL-4)
PARAPET ABUTMENT WITH GUARDRAIL CONNECTION (WITH 2" CONCRETE WEARING COURSE)

DES: DR: CHK: CHK: APPROVED:

SHEET NO. OF SHEETS

BRIDGE NO.

CODE 51

FIG. 5-397.157(F) (1 OF 2)

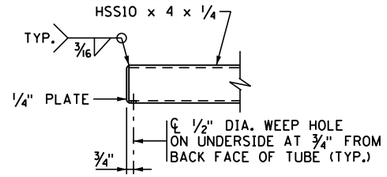

RAIL END DETAIL

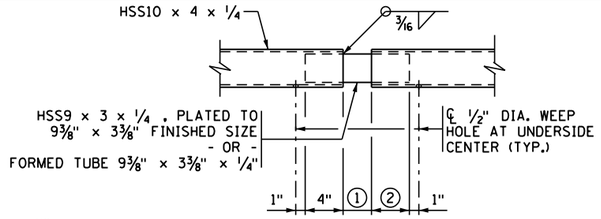

RAIL SLEEVE DETAIL

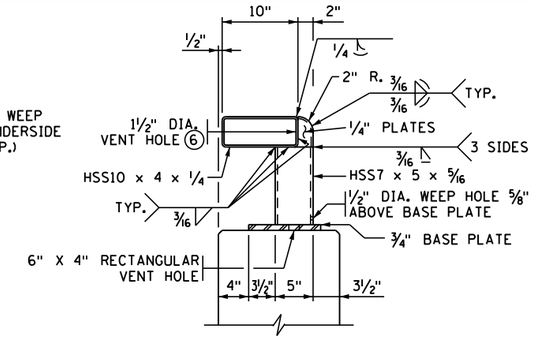

STRUCTURAL TUBE RAIL DETAIL

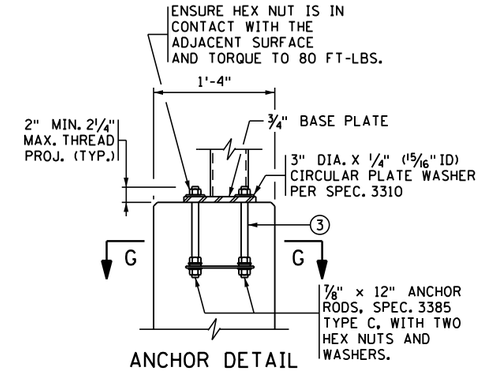

ANCHOR DETAIL

BILL OF REINFORCEMENT FOR PARAPET

BAR	NO.	LENGTH	SHAPE	LOCATION
R501E		5'-10"		PARAPET DOWEL
R502E		6'-0"		PARAPET DOWEL
R503E		6'-0"		PARAPET DOWEL
R504E		6'-1"		PARAPET VERTICAL
R505E		8'-7"		PARAPET VERTICAL
R506E	SER. OF 3	8'-1" TO 8'-5"		PARAPET VERTICAL
R507E		7'-9"		PARAPET VERTICAL
R508E		4'-9"		PARAPET VERTICAL
R509E		9'-1"		PARAPET LONGITUDINAL
R510E		2'-8"		PARAPET LONG. IN TAPER
R511E		2'-5"		PARAPET VERTICAL B.F.
R512E		3'-0"		PARAPET VERTICAL F.F.
R513E		4'-2"		VERTICAL @ BASE PLATE
R514E		4'-0"		LONGIT. @ BASE PLATE
R5__E				PARAPET LONGITUDINAL
R5__E				PARAPET LONGITUDINAL
R5__E				PARAPET LONGITUDINAL

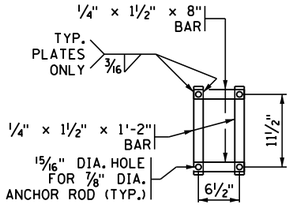

SECTION G-G

(ANCHOR BAR ALTERNATE)

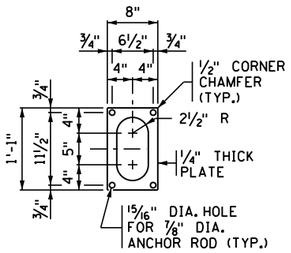

SECTION G-G

(ANCHOR PLATE ALTERNATE)

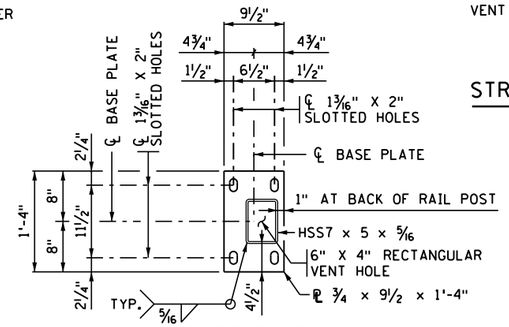

BASE PLATE

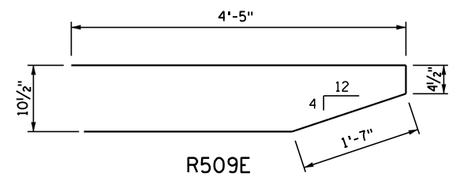

R509E

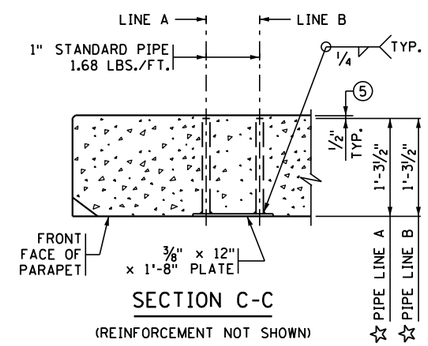

SECTION C-C

(REINFORCEMENT NOT SHOWN)

TRIM GUARDRAIL BOLTS SUCH THAT NO MORE THAN 1 1/2" PROTRUDES FROM BACK FACE OF PARAPET.

☆ DIMENSIONS INCLUDE 3/8" PLATE

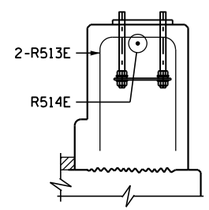

SECTION H-H

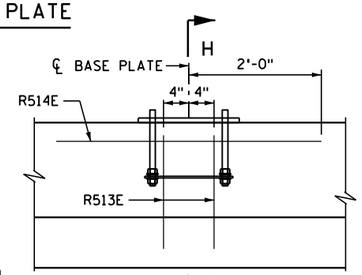

DETAIL "B"

(TYP. AT ALL RAIL POST ANCHORAGES)
(CONCRETE WEARING COURSE NOT SHOWN)

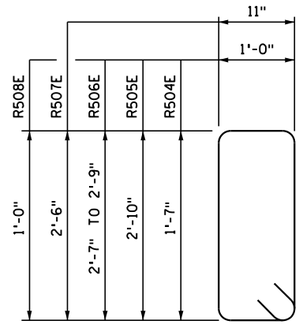

R504E, R505E, R506E, R507E, R508E

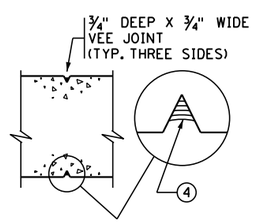

SECTION D-D

CONTROL JOINT DETAIL

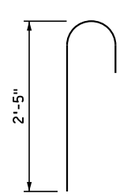

R512E

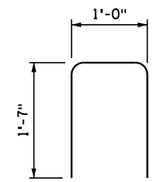

R513E

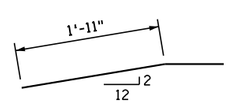

R510E

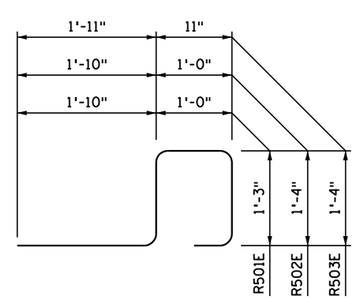

R501E, R502E, R503E

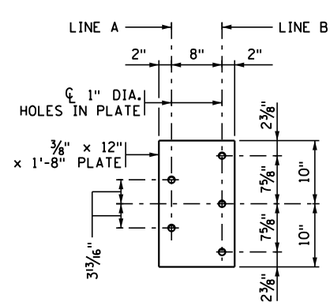

GUARDRAIL CONNECTION DETAIL

GALVANIZE AFTER FABRICATION PER SPEC. 3394
ESTIMATED WEIGHT = 37 LBS.

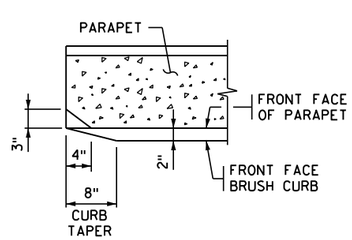

SECTION F-F

GENERAL NOTES

MEASURE PAYMENT LENGTH OF "TYPE P-2 (TL-4) BARRIER CONCRETE (3S52)" BETWEEN THE OUTSIDE ENDS OF THE PARAPET.
CONCRETE PARAPET = 381 LBS./FT. (0.094 CU. YDS./FT.)

MEASURE PAYMENT LENGTH OF "STRUCTURAL TUBE RAILING DESIGN T-1" FROM END TO END OF TUBING. DO NOT DEDUCT FOR JOINTS.

FINISH ALL EDGES OF PARAPET WITH 1/2" CHAMFER, EXCEPT WHERE OTHERWISE NOTED.

SPACE CONTROL JOINTS AT 10 FT. MAXIMUM. REFER TO SUPERSTRUCTURE SHEET FOR SPECIFIC SPACING INFORMATION.

PROVIDE CORRECT ALIGNMENT FOR ANCHORAGES BY PLACING THEM ACCURATELY AND NORMAL TO GRADE. SEE SPECIAL PROVISIONS.

INSTALL RAIL POSTS NORMAL TO GRADE.

PROVIDE STRUCTURAL STEEL AND PLATE WASHERS IN ACCORDANCE WITH SPEC. 3310. PROVIDE
STRUCTURAL TUBES PER ASTM A500, GRADE B AS SPECIFIED IN SPEC. 3361.

GALVANIZE BOLTS, NUTS, AND WASHERS IN ACCORDANCE WITH SPEC. 3392.

GALVANIZE ALL OTHER STRUCTURAL STEEL IN ACCORDANCE WITH SPEC. 3394, AFTER FABRICATION.

GUARDRAIL CONNECTION TO BE STRUCTURAL STEEL IN ACCORDANCE WITH SPEC. 3306.

GUARDRAIL CONNECTION AND NAMEPLATE TO BE CONSIDERED INCIDENTAL.

PRICE BID FOR "STRUCTURAL TUBE RAILING DESIGN T-1" INCLUDES ANCHORAGES AND ALL MATERIAL ABOVE TOP OF CONCRETE PARAPET.

ALL MATERIAL IN THE CONCRETE PARAPET IS LISTED IN SUMMARY OF QUANTITIES FOR SUPERSTRUCTURE.

SEE SPECIAL PROVISIONS FOR COATING TO BE APPLIED TO METAL RAILING.

CONTINUOUSLY GROUND ALL METAL RAILINGS, SEE THE SPECIAL PROVISIONS. REFER TO THE ELECTRICAL PLANS AND ELECTRICAL SPECIAL PROVISIONS FOR DETAILS REGARDING BONDING MULTIPLE ELECTRICAL GROUNDING SYSTEMS.

1. 1" AT RAILING JOINTS. AT EXPANSION JOINTS, MAKE 1" LARGER THAN GAP IN EXPANSION JOINT.
2. 5" AT RAILING JOINTS AND 8" AT EXPANSION JOINTS.
3. SUBSTITUTION OF ADHESIVE ANCHORAGE FOR CAST-IN-PLACE ANCHORAGE IS NOT PERMITTED.
4. JOINT SEALANT PER MnDOT APPROVED/QUALIFIED PRODUCTS LIST - CRACK AND JOINT MATERIALS - SILICONE JOINT SEALERS.
5. REMOVE CONCRETE FROM PIPE ENDS AFTER FORM REMOVAL.
6. CENTER HOLE 1 1/4" FROM TOP OF TUBE.

CODE 51

FIG. 5-397.157(F) (2 OF 2)

REVISED:

APPROVED: APRIL 09, 2020
Kevin Western
STATE BRIDGE ENGINEER

CERTIFIED BY _____ LICENSED PROFESSIONAL ENGINEER _____ DATE
NAME: LIC. NO.

TITLE: STRUCTURAL TUBE RAILING (DESIGN T-1) AND CONCRETE PARAPET (TYPE P-2, TL-4)
PARAPET ABUTMENT WITH GUARDRAIL CONNECTION (WITH 2" CONCRETE WEARING COURSE)

DES: DR: CHK: CHK:

APPROVED:

SHEET NO. OF SHEETS

BRIDGE NO.

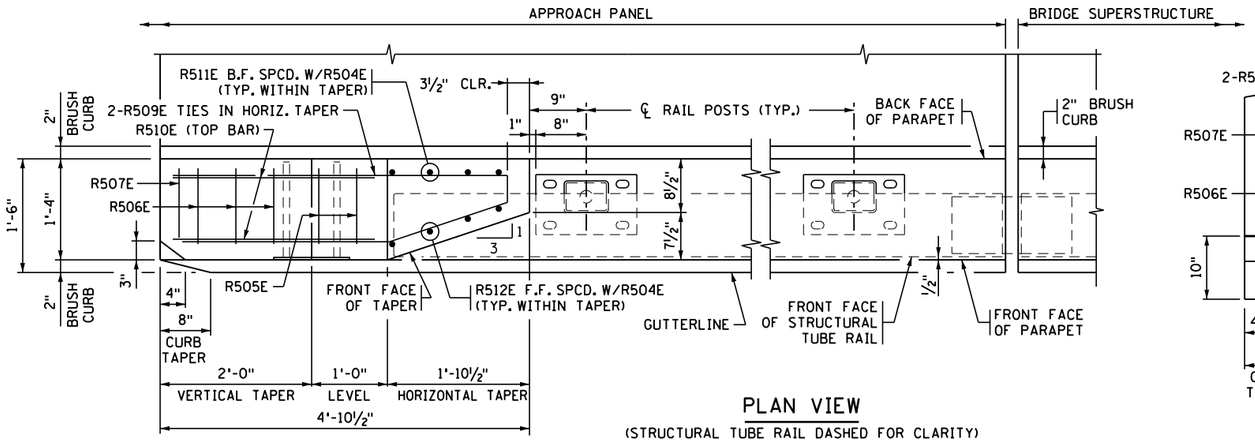

PLAN VIEW

(STRUCTURAL TUBE RAIL DASHED FOR CLARITY)

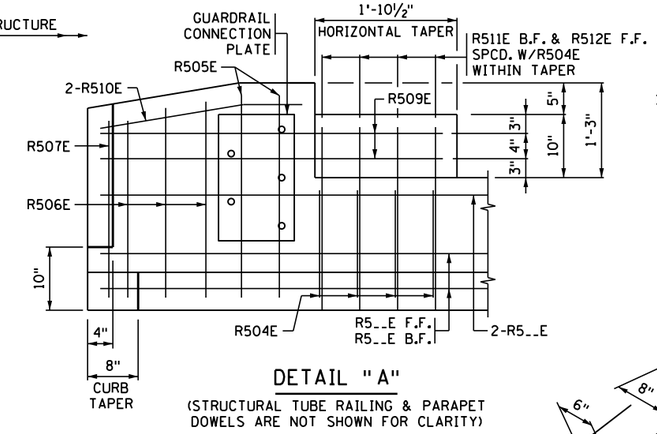

DETAIL "A"

(STRUCTURAL TUBE RAILING & PARAPET DOWELS ARE NOT SHOWN FOR CLARITY)

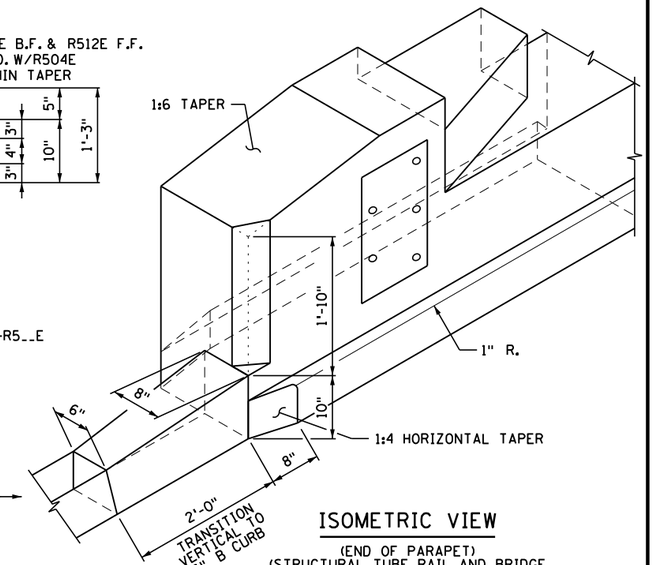

ISOMETRIC VIEW

(END OF PARAPET)
(STRUCTURAL TUBE RAIL AND BRIDGE SLAB SIDEWALK NOT SHOWN)

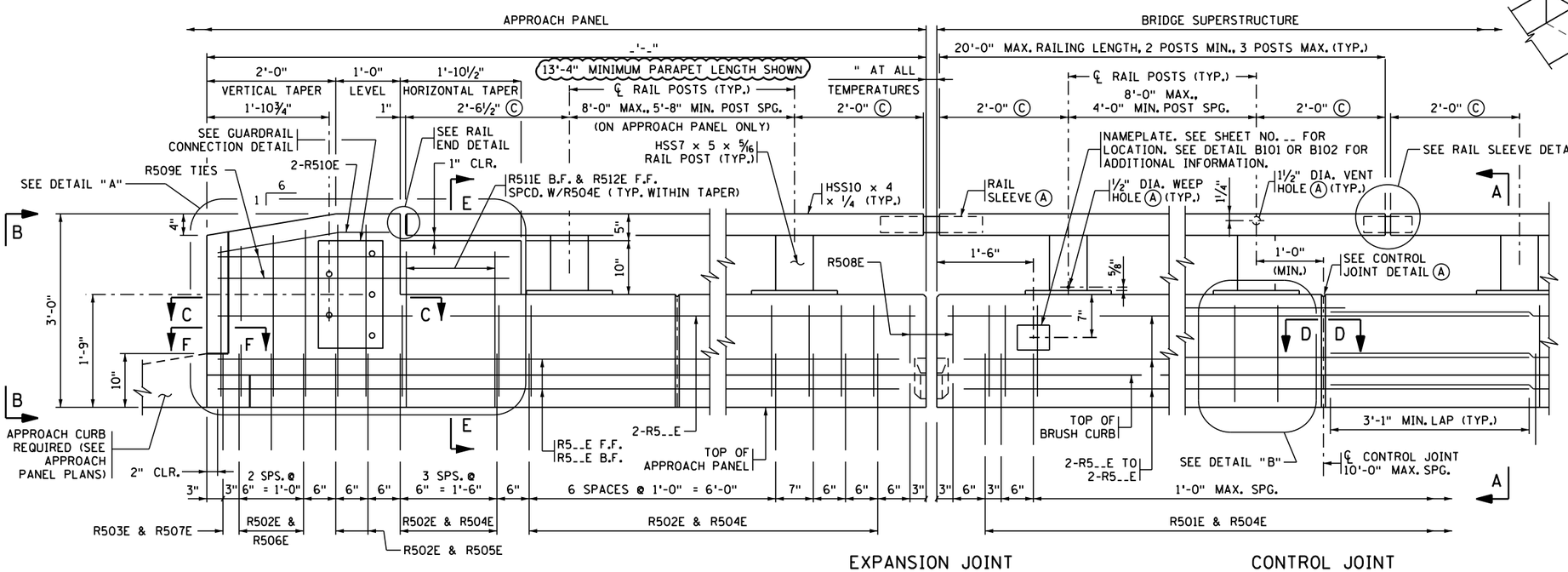

EXPANSION JOINT

(DEVICE NOT SHOWN)

CONTROL JOINT

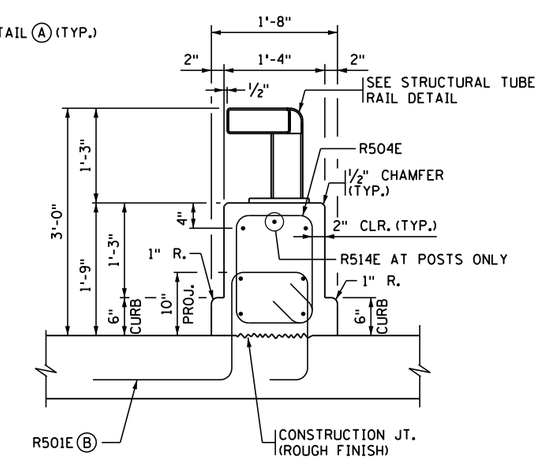

SECTION A-A

INSIDE ELEVATION OF PARAPET/RAILING

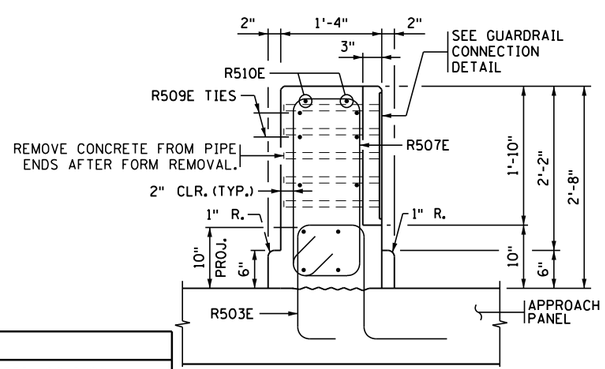

END VIEW B-B

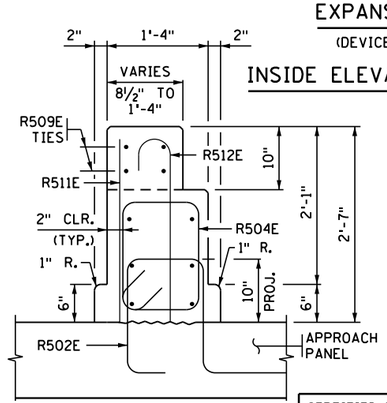

SECTION E-E

(STRUCTURAL TUBE RAIL NOT SHOWN)

PARAPET/RAILING COMBINATION MEETS TL-4 REQUIREMENTS OF NCHRP REPORT 350 ON BRIDGE DECK AND TL-3 ON APPROACH PANEL

DESIGNER NOTE (REMOVE PRIOR TO PRINTING FINAL PLAN): FOR BRIDGES WITH SUPERELEVATION EXCEEDING 2%, SHOW DIMENSIONS FOR BOTH THE FRONT AND BACK FACE OF THE PARAPET. ALSO VERIFY THAT BAR R501E HAS 10" MIN. PROJECTION WHEN CROSS SLOPE VARIES FROM NORMAL 0.02 FT/FT

DESIGNER NOTE (REMOVE PRIOR TO PRINTING FINAL PLAN): MINIMUM BARRIER LENGTH ON APPROACH PANEL IS 13'-4" WITH MINIMUM OF 20 R502E & R503E DOWELS WITH ACCOMPANYING APPROPRIATE PARAPET VERTICAL BARS. VERIFY APPROACH PARAPET LENGTH WITH ROADWAY DESIGNER. REFER TO MEMO TO DESIGNERS #2020-01 FOR ADDITIONAL REQUIREMENTS REGARDING BARRIER PLACEMENT.

NOTES:

F.F. DENOTES FRONT FACE
B.F. DENOTES BACK FACE

Ⓐ SEE SHEET 2 OF 2 FOR DETAILS.

Ⓑ PLACE BAR ON TOP OF BOTTOM REINFORCEMENT MAT IN DECK.

Ⓒ STRUCTURAL TUBE RAIL CANTILEVER DIMENSIONS ARE BASED ON SUCCESSFUL CRASH TESTS AND SHOULD NOT BE MODIFIED.

CODE 51

FIG. 5-397.157(G) (1 OF 2)

REVISED:

APPROVED: APRIL 09, 2020
Kevin Western
STATE BRIDGE ENGINEER

CERTIFIED BY _____ LICENSED PROFESSIONAL ENGINEER _____ DATE
NAME: LIC. NO.

TITLE: STRUCTURAL TUBE RAILING (DESIGN T-1) AND CONCRETE PARAPET (TYPE P-2, TL-4)
PARAPET ABUTMENT WITH BRIDGE SLAB SIDEWALK AND GUARDRAIL CONNECTION (WITHOUT CONCRETE WEARING COURSE)

DES: DR: CHK: CHK:

APPROVED:

SHEET NO. OF SHEETS

BRIDGE NO.

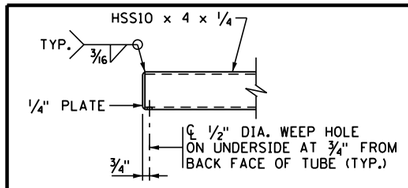

RAIL END DETAIL

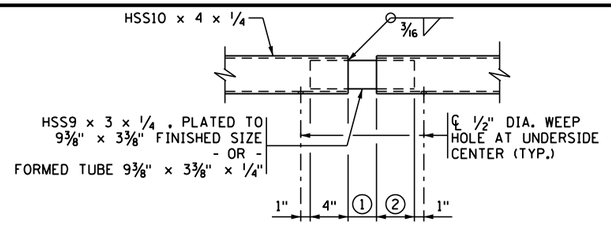

RAIL SLEEVE DETAIL

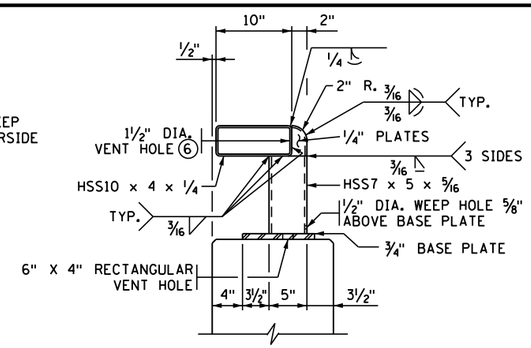

STRUCTURAL TUBE RAIL DETAIL

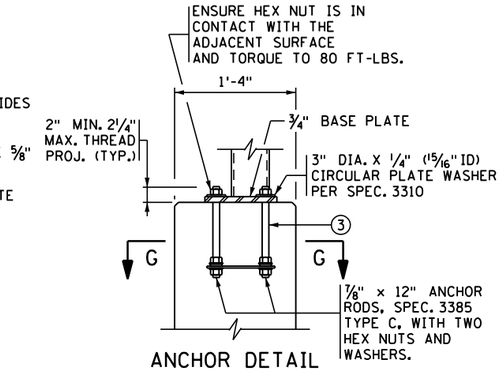

ANCHOR DETAIL

BILL OF REINFORCEMENT FOR PARAPET

BAR	NO.	LENGTH	SHAPE	LOCATION
R501E		6'-2"		PARAPET DOWEL
R502E		6'-4"		PARAPET DOWEL
R503E		6'-4"		PARAPET DOWEL
R504E		5'-9"		PARAPET VERTICAL
R505E		8'-3"		PARAPET VERTICAL
R506E	SER. OF 3	7'-9" TO 8'-1"		PARAPET VERTICAL
R507E		7'-5"		PARAPET VERTICAL
R508E		4'-5"		PARAPET VERTICAL
R509E		9'-1"		PARAPET LONGITUDINAL
R510E		2'-8"		PARAPET LONG. IN TAPER
R511E		2'-5"		PARAPET VERTICAL B.F.
R512E		3'-0"		PARAPET VERTICAL F.F.
R513E		3'-10"		VERTICAL @ BASE PLATE
R514E		4'-0"		LONGIT. @ BASE PLATE
R5__E				PARAPET LONGITUDINAL
R5__E				PARAPET LONGITUDINAL
R5__E				PARAPET LONGITUDINAL
R5__E				PARAPET LONGITUDINAL
R5__E				PARAPET LONGITUDINAL

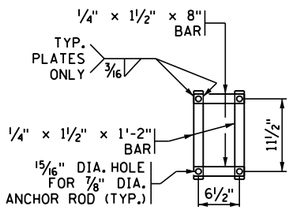

SECTION G-G

(ANCHOR BAR ALTERNATE)

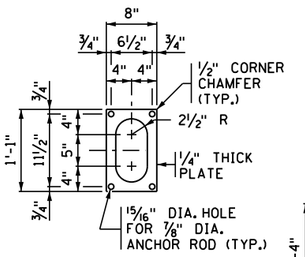

SECTION G-G

(ANCHOR PLATE ALTERNATE)

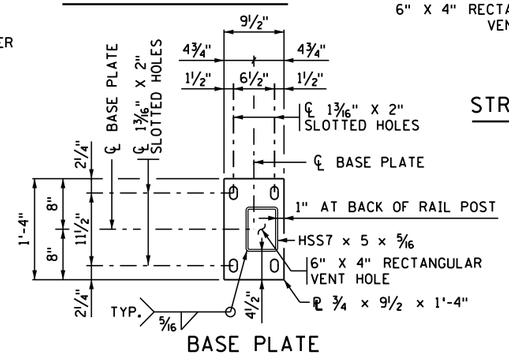

BASE PLATE

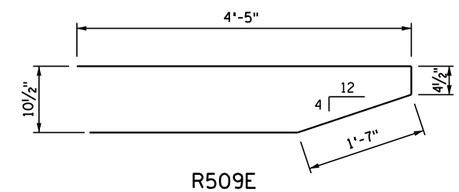

R509E

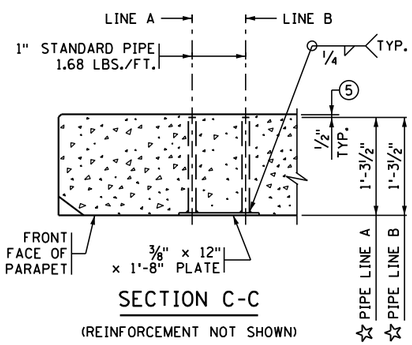

SECTION C-C

(REINFORCEMENT NOT SHOWN)

TRIM GUARDRAIL BOLTS SUCH THAT NO MORE THAN 1 1/2" PROTRUDES FROM BACK FACE OF PARAPET.

☆ DIMENSIONS INCLUDE 3/8" PLATE

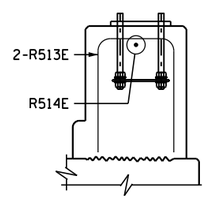

SECTION H-H

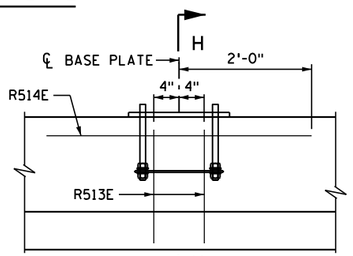

DETAIL "B"

(TYP. AT ALL RAIL POST ANCHORAGES

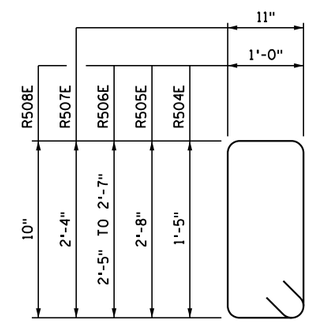

R504E, R505E, R506E, R507E, R508E

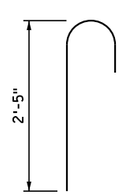

R512E

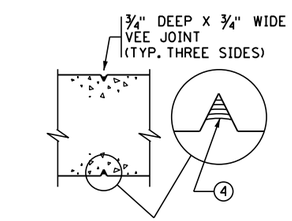

SECTION D-D

CONTROL JOINT DETAIL

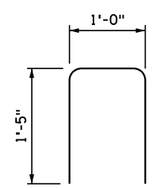

R513E

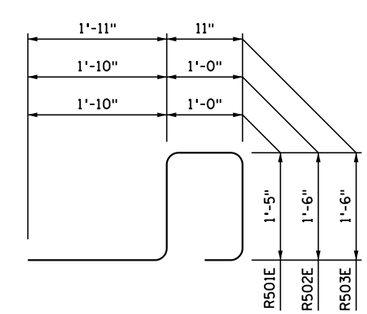

R501E, R502E, R503E

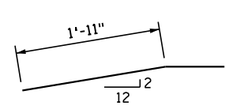

R510E

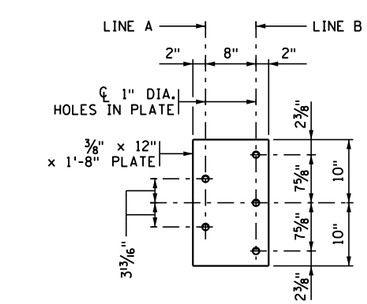

GUARDRAIL CONNECTION DETAIL

GALVANIZE AFTER FABRICATION PER SPEC. 3394

ESTIMATED WEIGHT = 37 LBS.

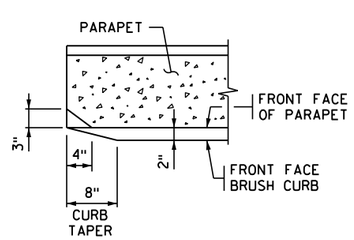

SECTION F-F

GENERAL NOTES

MEASURE PAYMENT LENGTH OF "TYPE P-2 (TL-4) BARRIER CONCRETE (3S52)" BETWEEN THE OUTSIDE ENDS OF THE PARAPET.
CONCRETE PARAPET = 374 LBS./FT. (0.092 CU. YDS./FT.)

MEASURE PAYMENT LENGTH OF "STRUCTURAL TUBE RAILING DESIGN T-1" FROM END TO END OF TUBING. DO NOT DEDUCT FOR JOINTS.

FINISH ALL EDGES OF PARAPET WITH 1/2" CHAMFER, EXCEPT WHERE OTHERWISE NOTED.

SPACE CONTROL JOINTS AT 10 FT. MAXIMUM. REFER TO SUPERSTRUCTURE SHEET FOR SPECIFIC SPACING INFORMATION.

PROVIDE CORRECT ALIGNMENT FOR ANCHORAGES BY PLACING THEM ACCURATELY AND NORMAL TO GRADE. SEE SPECIAL PROVISIONS.

INSTALL RAIL POSTS NORMAL TO GRADE.

PROVIDE STRUCTURAL STEEL AND PLATE WASHERS IN ACCORDANCE WITH SPEC. 3310. PROVIDE STRUCTURAL TUBES PER ASTM A500, GRADE B AS SPECIFIED IN SPEC. 3361.

GALVANIZE BOLTS, NUTS, AND WASHERS IN ACCORDANCE WITH SPEC. 3392.

GALVANIZE ALL OTHER STRUCTURAL STEEL IN ACCORDANCE WITH SPEC. 3394, AFTER FABRICATION.

GUARDRAIL CONNECTION TO BE STRUCTURAL STEEL IN ACCORDANCE WITH SPEC. 3306.

GUARDRAIL CONNECTION AND NAMEPLATE TO BE CONSIDERED INCIDENTAL.

PRICE BID FOR "STRUCTURAL TUBE RAILING DESIGN T-1" INCLUDES ANCHORAGES AND ALL MATERIAL ABOVE TOP OF CONCRETE PARAPET.

ALL MATERIAL IN THE CONCRETE PARAPET IS LISTED IN SUMMARY OF QUANTITIES FOR SUPERSTRUCTURE.

SEE SPECIAL PROVISIONS FOR COATING TO BE APPLIED TO METAL RAILING.

CONTINUOUSLY GROUND ALL METAL RAILINGS, SEE THE SPECIAL PROVISIONS. REFER TO THE ELECTRICAL PLANS AND ELECTRICAL SPECIAL PROVISIONS FOR DETAILS REGARDING BONDING MULTIPLE ELECTRICAL GROUNDING SYSTEMS.

1. 1" AT RAILING JOINTS. AT EXPANSION JOINTS, MAKE 1" LARGER THAN GAP IN EXPANSION JOINT.
2. 5" AT RAILING JOINTS AND 8" AT EXPANSION JOINTS.
3. SUBSTITUTION OF ADHESIVE ANCHORAGE FOR CAST-IN-PLACE ANCHORAGE IS NOT PERMITTED.
4. JOINT SEALANT PER MnDOT APPROVED/QUALIFIED PRODUCTS LIST - CRACK AND JOINT MATERIALS - SILICONE JOINT SEALERS.
5. REMOVE CONCRETE FROM PIPE ENDS AFTER FORM REMOVAL.
6. CENTER HOLE 1 1/4" FROM TOP OF TUBE.

REVISED:

APPROVED: APRIL 09, 2020

Kevin Western

STATE BRIDGE ENGINEER

CERTIFIED BY _____ LICENSED PROFESSIONAL ENGINEER _____ DATE

NAME: LIC. NO.

TITLE: STRUCTURAL TUBE RAILING (DESIGN T-1) AND CONCRETE PARAPET (TYPE P-2, TL-4)
PARAPET ABUTMENT WITH BRIDGE SLAB SIDEWALK AND GUARDRAIL CONNECTION (WITHOUT CONCRETE WEARING COURSE)

DES: DR: CHK: CHK:

SHEET NO. OF SHEETS

APPROVED:

BRIDGE NO.

CODE 51

FIG. 5-397.157(G) (2 OF 2)

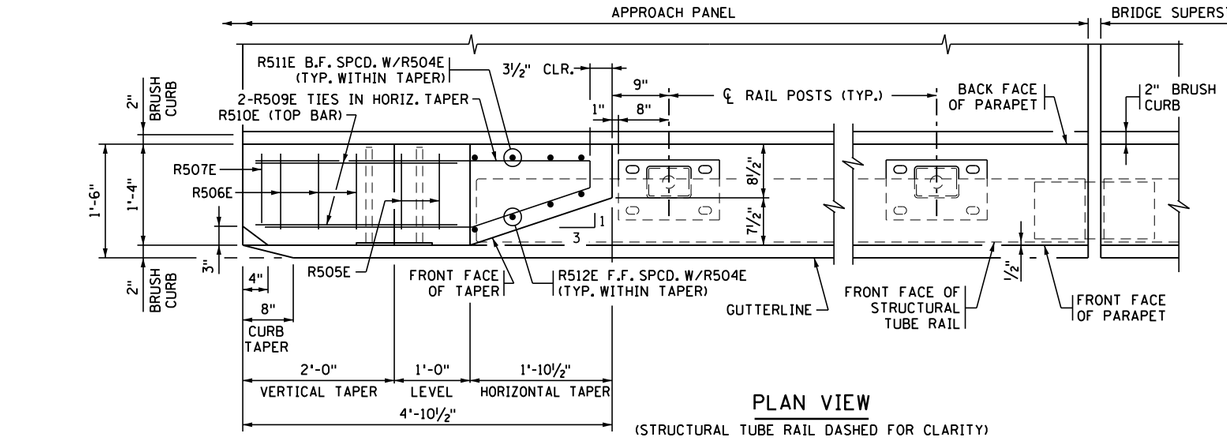

PLAN VIEW

(STRUCTURAL TUBE RAIL DASHED FOR CLARITY)

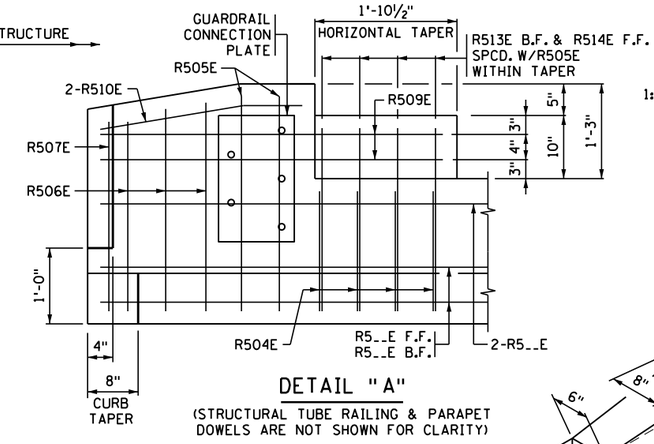

DETAIL "A"

(STRUCTURAL TUBE RAILING & PARAPET DOWELS ARE NOT SHOWN FOR CLARITY)

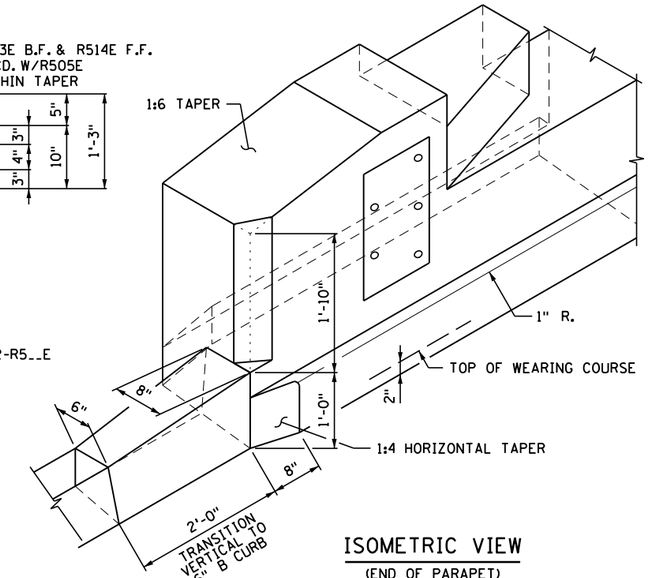

ISOMETRIC VIEW

(END OF PARAPET)

(STRUCTURAL TUBE RAIL, BRIDGE SLAB SIDEWALK AND CONCRETE WEARING COURSE NOT SHOWN)

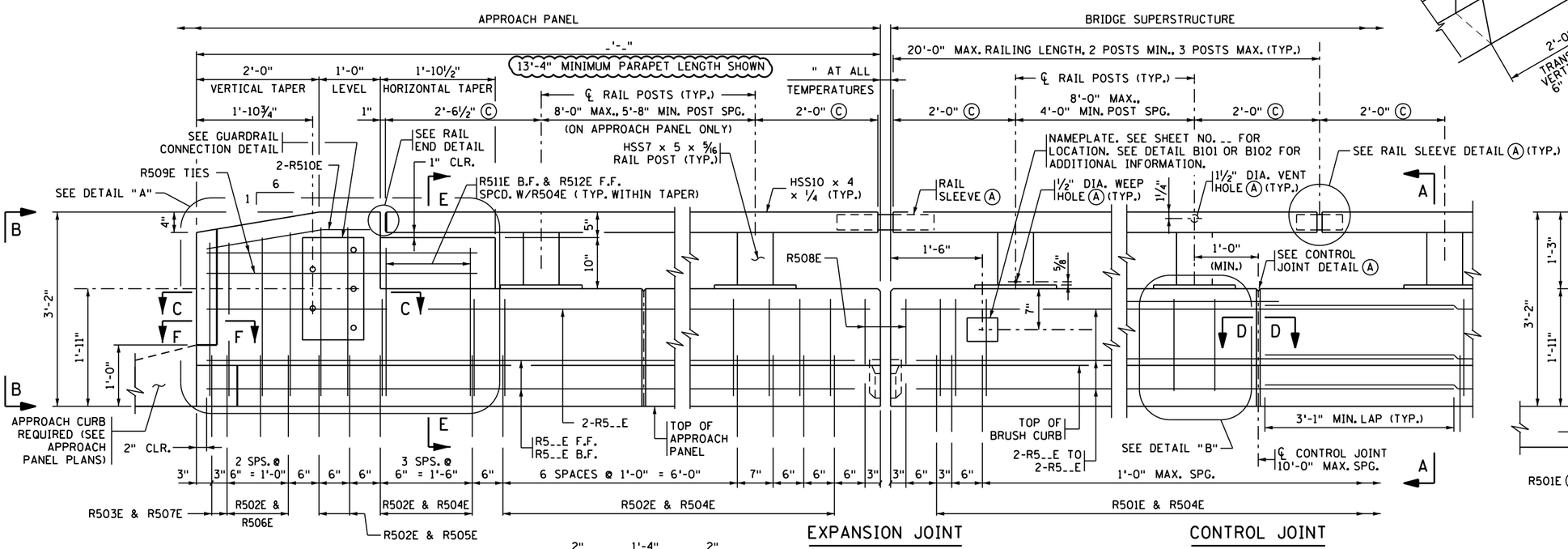

EXPANSION JOINT

(DEVICE NOT SHOWN)

CONTROL JOINT

INSIDE ELEVATION OF PARAPET/RAILING

(CONCRETE WEARING COURSE NOT SHOWN)

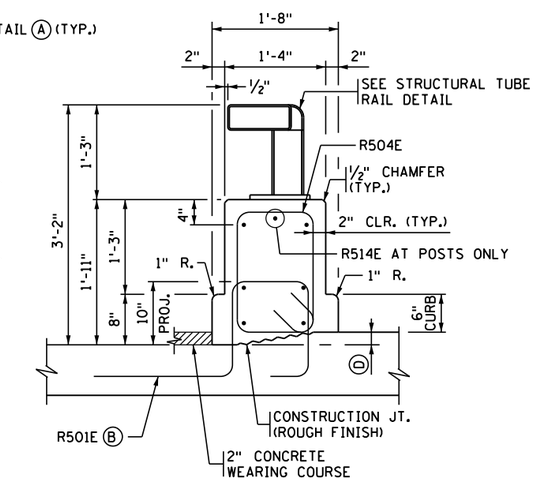

SECTION A-A

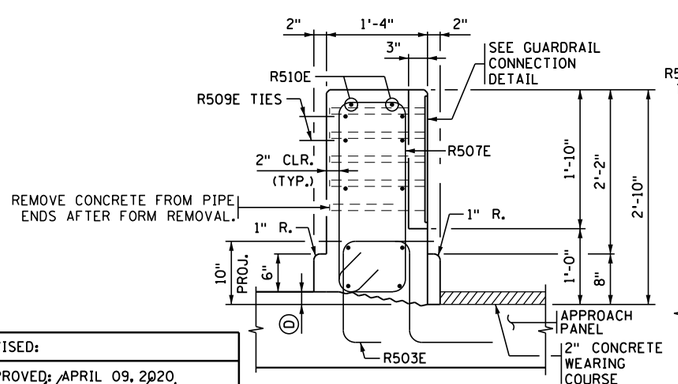

END VIEW B-B

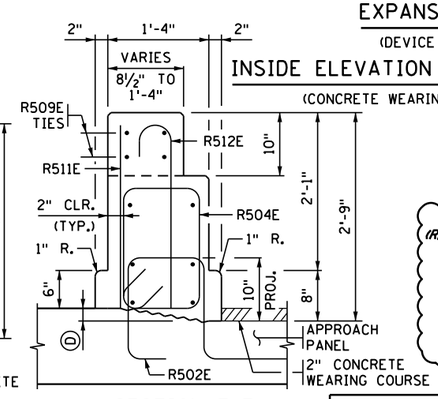

SECTION E-E

(STRUCTURAL TUBE RAIL NOT SHOWN)

PARAPET/RAILING COMBINATION MEETS TL-4 REQUIREMENTS OF NCHRP REPORT 350 ON BRIDGE DECK AND TL-3 ON APPROACH PANEL

DESIGNER NOTE (REMOVE PRIOR TO PRINTING FINAL PLAN):

FOR BRIDGES WITH SUPERELEVATION EXCEEDING 2%, SHOW DIMENSIONS FOR BOTH THE FRONT AND BACK FACE OF THE PARAPET. ALSO VERIFY THAT BAR R501E HAS 10" MIN. PROJECTION WHEN CROSS SLOPE VARIES FROM NORMAL 0.02 FT/FT

DESIGNER NOTE (REMOVE PRIOR TO PRINTING FINAL PLAN):

MINIMUM BARRIER LENGTH ON APPROACH PANEL IS 13'-4" WITH MINIMUM OF 20 R502E & R503E DOWELS WITH ACCOMPANYING APPROPRIATE PARAPET VERTICAL BARS. VERIFY APPROACH PARAPET LENGTH WITH ROADWAY DESIGNER. REFER TO MEMO TO DESIGNERS #2020-01 FOR ADDITIONAL REQUIREMENTS REGARDING BARRIER PLACEMENT.

NOTES:

F.F. DENOTES FRONT FACE
B.F. DENOTES BACK FACE

(A) SEE SHEET 2 OF 2 FOR DETAILS.

(B) PLACE BAR ON TOP OF BOTTOM REINFORCEMENT MAT IN DECK.

(C) STRUCTURAL TUBE RAIL CANTILEVER DIMENSIONS ARE BASED ON SUCCESSFUL CRASH TESTS AND SHOULD NOT BE MODIFIED.

(D) DIMENSIONS TO BE DETERMINED BASED ON THE BRIDGE DECK SLOPE.

CODE 51

FIG. 5-397.157(H) (1 OF 2)

REVISED:

APPROVED: APRIL 09, 2020

Kevin Western
STATE BRIDGE ENGINEER

CERTIFIED BY _____ LICENSED PROFESSIONAL ENGINEER _____ DATE

NAME: LIC. NO.

TITLE: STRUCTURAL TUBE RAILING (DESIGN T-1) AND CONCRETE PARAPET (TYPE P-2, TL-4)
PARAPET ABUTMENT WITH BRIDGE SLAB SIDEWALK AND GUARDRAIL CONNECTION (WITH 2" CONCRETE WEARING COURSE)

DES: DR: CHK: CHK:

APPROVED:

SHEET NO. OF SHEETS

BRIDGE NO.

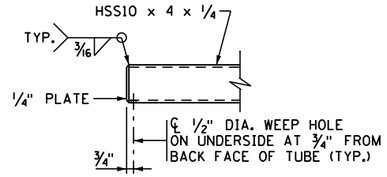

RAIL END DETAIL

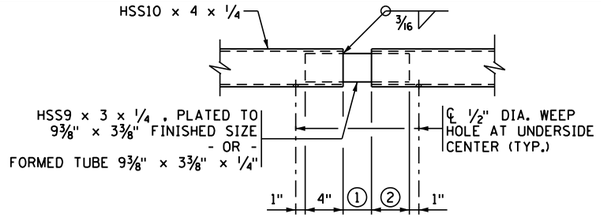

RAIL SLEEVE DETAIL

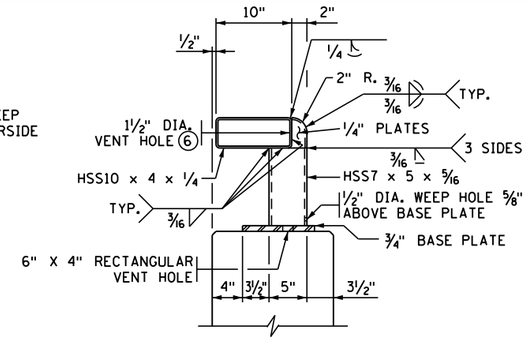

STRUCTURAL TUBE RAIL DETAIL

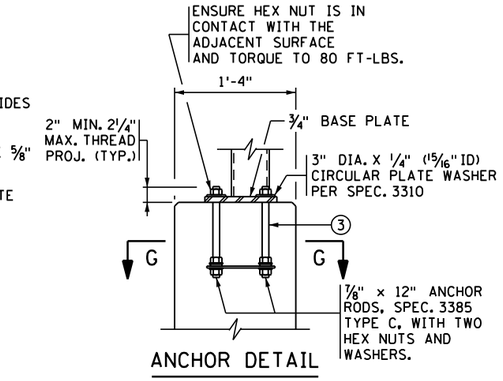

ANCHOR DETAIL

BILL OF REINFORCEMENT FOR PARAPET

BAR	NO.	LENGTH	SHAPE	LOCATION
R501E		5'-10"		PARAPET DOWEL
R502E		6'-0"		PARAPET DOWEL
R503E		6'-0"		PARAPET DOWEL
R504E		6'-1"		PARAPET VERTICAL
R505E		8'-7"		PARAPET VERTICAL
R506E	SER. OF 3	8'-1" TO 8'-5"		PARAPET VERTICAL
R507E		7'-9"		PARAPET VERTICAL
R508E		4'-9"		PARAPET VERTICAL
R509E		9'-1"		PARAPET LONGITUDINAL
R510E		2'-8"		PARAPET LONG. IN TAPER
R511E		2'-5"		PARAPET VERTICAL B.F.
R512E		3'-0"		PARAPET VERTICAL F.F.
R513E		4'-2"		VERTICAL @ BASE PLATE
R514E		4'-0"		LONGIT. @ BASE PLATE
R5__E				PARAPET LONGITUDINAL
R5__E				PARAPET LONGITUDINAL
R5__E				PARAPET LONGITUDINAL

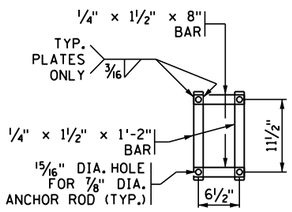

SECTION G-G

(ANCHOR BAR ALTERNATE)

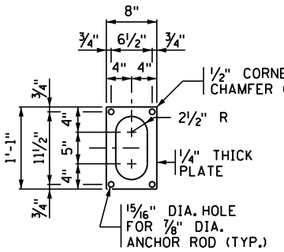

SECTION G-G

(ANCHOR PLATE ALTERNATE)

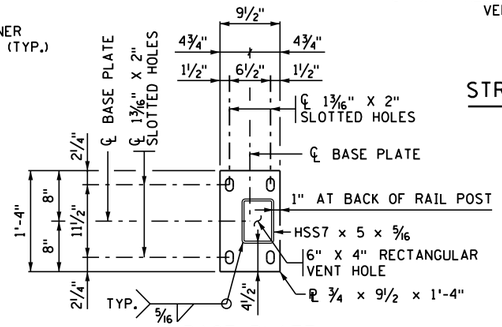

BASE PLATE

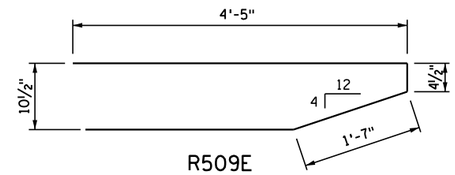

R509E

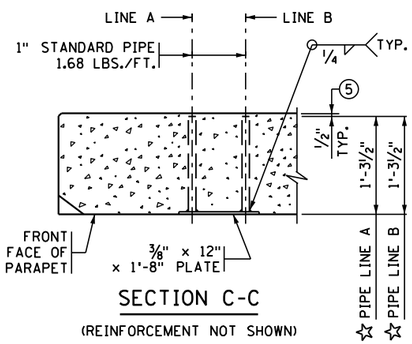

SECTION C-C

(REINFORCEMENT NOT SHOWN)

TRIM GUARDRAIL BOLTS SUCH THAT NO MORE THAN 1 1/2" PROTRUDES FROM BACK FACE OF PARAPET.

☆ DIMENSIONS INCLUDE 3/8" PLATE

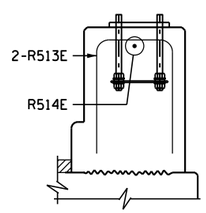

SECTION H-H

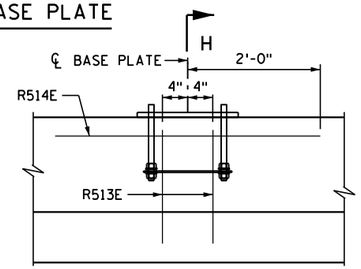

DETAIL "B"

(TYP. AT ALL RAIL POST ANCHORAGES)
(CONCRETE WEARING COURSE NOT SHOWN)

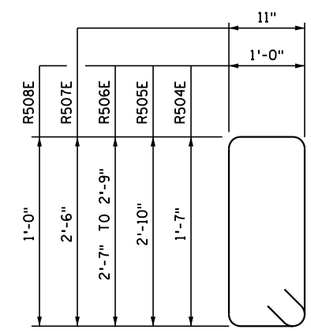

R504E, R505E, R506E, R507E, R508E

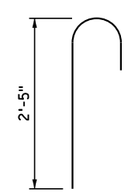

R512E

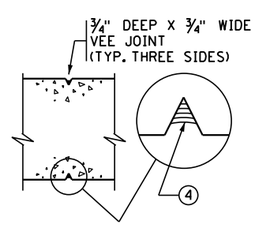

SECTION D-D

CONTROL JOINT DETAIL

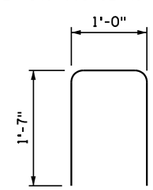

R513E

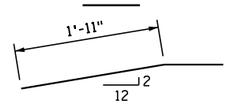

R510E

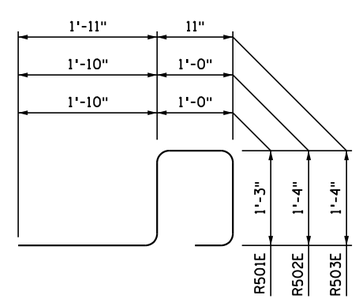

R501E, R502E, R503E

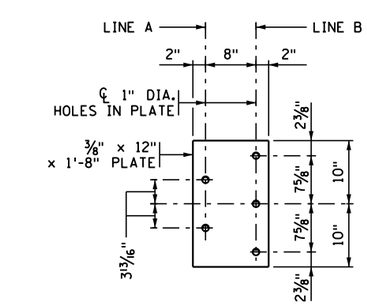

GUARDRAIL CONNECTION DETAIL

GALVANIZE AFTER FABRICATION PER SPEC. 3394
ESTIMATED WEIGHT = 37 LBS.

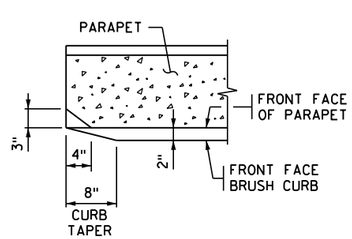

SECTION F-F

GENERAL NOTES

MEASURE PAYMENT LENGTH OF "TYPE P-2 (TL-4) BARRIER CONCRETE (3S52)" BETWEEN THE OUTSIDE ENDS OF THE PARAPET.
CONCRETE PARAPET = 395 LBS./FT. (0.098 CU. YDS./FT.)

MEASURE PAYMENT LENGTH OF "STRUCTURAL TUBE RAILING DESIGN T-1" FROM END TO END OF TUBING. DO NOT DEDUCT FOR JOINTS.

FINISH ALL EDGES OF PARAPET WITH 1/2" CHAMFER, EXCEPT WHERE OTHERWISE NOTED.

SPACE CONTROL JOINTS AT 10 FT. MAXIMUM. REFER TO SUPERSTRUCTURE SHEET FOR SPECIFIC SPACING INFORMATION.

PROVIDE CORRECT ALIGNMENT FOR ANCHORAGES BY PLACING THEM ACCURATELY AND NORMAL TO GRADE. SEE SPECIAL PROVISIONS.

INSTALL RAIL POSTS NORMAL TO GRADE.

PROVIDE STRUCTURAL STEEL AND PLATE WASHERS IN ACCORDANCE WITH SPEC. 3310. PROVIDE STRUCTURAL TUBES PER ASTM A500, GRADE B AS SPECIFIED IN SPEC. 3361.

GALVANIZE BOLTS, NUTS, AND WASHERS IN ACCORDANCE WITH SPEC. 3392.

GALVANIZE ALL OTHER STRUCTURAL STEEL IN ACCORDANCE WITH SPEC. 3394, AFTER FABRICATION.

GUARDRAIL CONNECTION TO BE STRUCTURAL STEEL IN ACCORDANCE WITH SPEC. 3306.

GUARDRAIL CONNECTION AND NAMEPLATE TO BE CONSIDERED INCIDENTAL.

PRICE BID FOR "STRUCTURAL TUBE RAILING DESIGN T-1" INCLUDES ANCHORAGES AND ALL MATERIAL ABOVE TOP OF CONCRETE PARAPET.

ALL MATERIAL IN THE CONCRETE PARAPET IS LISTED IN SUMMARY OF QUANTITIES FOR SUPERSTRUCTURE.

SEE SPECIAL PROVISIONS FOR COATING TO BE APPLIED TO METAL RAILING.

CONTINUOUSLY GROUND ALL METAL RAILINGS, SEE THE SPECIAL PROVISIONS. REFER TO THE ELECTRICAL PLANS AND ELECTRICAL SPECIAL PROVISIONS FOR DETAILS REGARDING BONDING MULTIPLE ELECTRICAL GROUNDING SYSTEMS.

1. 1" AT RAILING JOINTS. AT EXPANSION JOINTS, MAKE 1" LARGER THAN GAP IN EXPANSION JOINT.
2. 5" AT RAILING JOINTS AND 8" AT EXPANSION JOINTS.
3. SUBSTITUTION OF ADHESIVE ANCHORAGE FOR CAST-IN-PLACE ANCHORAGE IS NOT PERMITTED.
4. JOINT SEALANT PER MnDOT APPROVED/QUALIFIED PRODUCTS LIST - CRACK AND JOINT MATERIALS - SILICONE JOINT SEALERS.
5. REMOVE CONCRETE FROM PIPE ENDS AFTER FORM REMOVAL.
6. CENTER HOLE 1 1/4" FROM TOP OF TUBE.

CODE 51

FIG. 5-397.157(H) (2 OF 2)

REVISED:

APPROVED: APRIL 09, 2020
Kevin Western
STATE BRIDGE ENGINEER

CERTIFIED BY _____ LICENSED PROFESSIONAL ENGINEER _____ DATE
NAME: LIC. NO.

TITLE: STRUCTURAL TUBE RAILING (DESIGN T-1) AND CONCRETE PARAPET (TYPE P-2, TL-4)
PARAPET ABUTMENT WITH BRIDGE SLAB SIDEWALK AND GUARDRAIL CONNECTION (WITH 2" CONCRETE WEARING COURSE)

DES: DR: CHK: CHK:
SHEET NO. OF SHEETS

APPROVED:

BRIDGE NO.

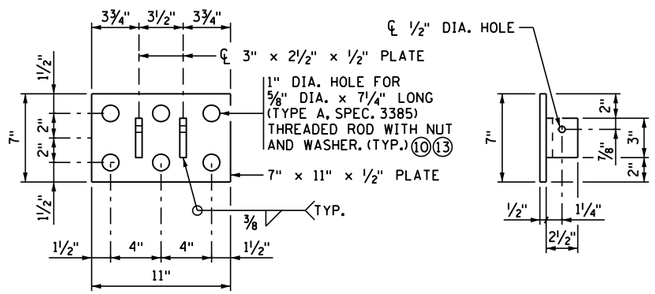

CABLE ANCHOR PLATE DETAIL

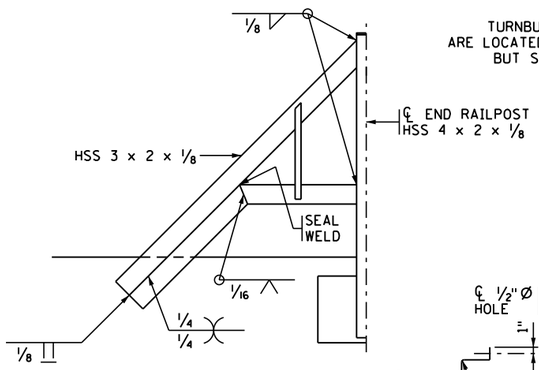

WELDS AT END PANEL

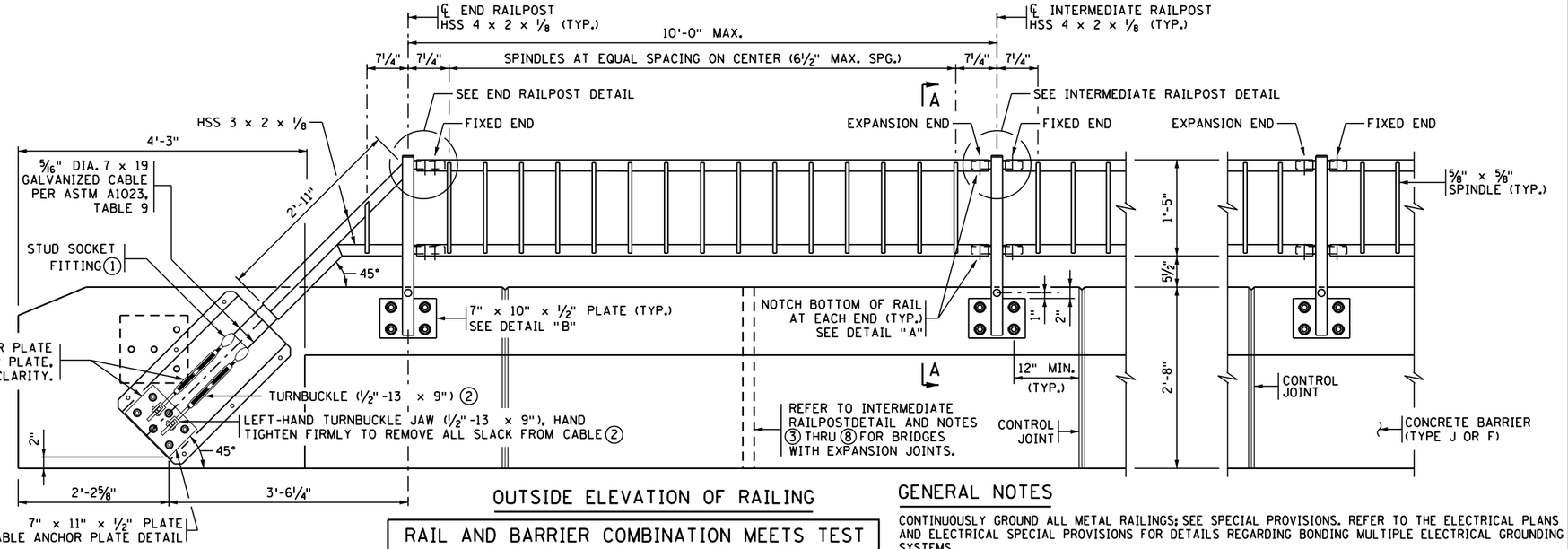

OUTSIDE ELEVATION OF RAILING

RAIL AND BARRIER COMBINATION MEETS TEST LEVEL 4 REQUIREMENTS OF NCHRP REPORT 350.

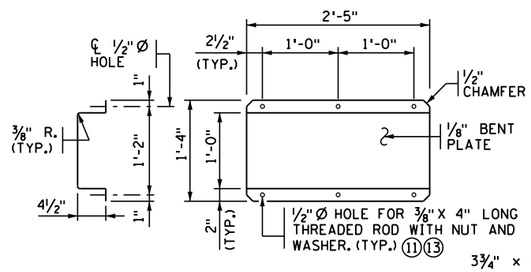

COVER PLATE DETAIL

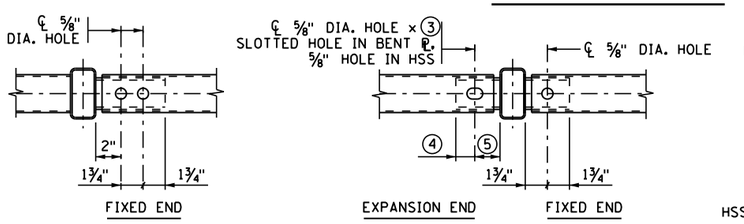

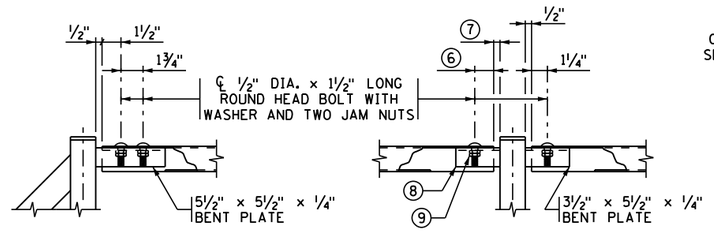

END RAILPOST DETAIL

TOP AND BOTTOM RAIL CONNECTIONS ARE SIMILAR

INTERMEDIATE RAILPOST DETAIL

TOP AND BOTTOM RAIL CONNECTIONS ARE SIMILAR

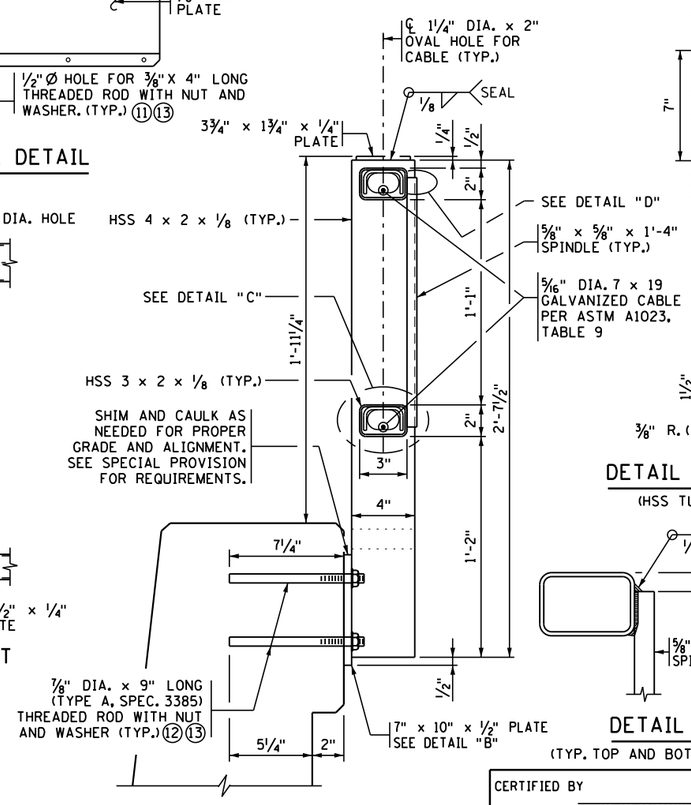

SECTION A-A

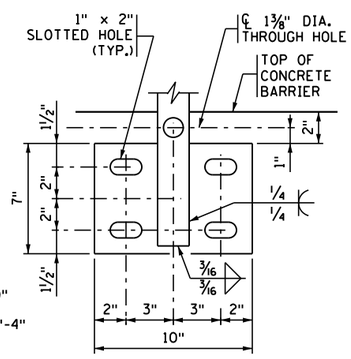

DETAIL "B"

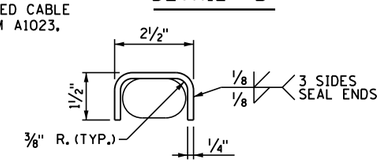

DETAIL "C" - BENT PLATE

(HSS TUBE RAIL NOT SHOWN)

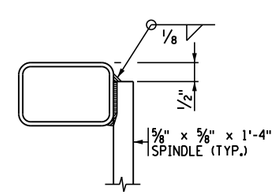

DETAIL "D"

(TYP. TOP AND BOTTOM RAIL)

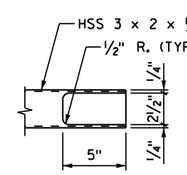

DETAIL "A"

GENERAL NOTES

CONTINUOUSLY GROUND ALL METAL RAILINGS; SEE SPECIAL PROVISIONS. REFER TO THE ELECTRICAL PLANS AND ELECTRICAL SPECIAL PROVISIONS FOR DETAILS REGARDING BONDING MULTIPLE ELECTRICAL GROUNDING SYSTEMS.

REFER TO SUPERSTRUCTURE AND CONCRETE BARRIER SHEETS FOR ADDITIONAL DETAILS AND RAILPOST AND/OR CONTROL JOINT SPACING.

MEASURE PAYMENT LENGTH OF "STRUCTURAL TUBE RAILING (DESIGN T-2)" FROM CABLE ANCHOR PLATE TO CABLE ANCHOR PLATE.

PROVIDE A500, GRADE B STRUCTURAL STEEL TUBING. PROVIDE ALL OTHER STRUCTURAL STEEL PER SPEC. 3306.

GALVANIZE THREADED RODS, BOLTS, NUTS AND WASHERS PER SPEC. 3392. GALVANIZE ALL OTHER STRUCTURAL STEEL PER SPEC. 3394 AFTER FABRICATION. SEAL WELD ALL SURFACES PRIOR TO GALVANIZING.

STRAIGHTEN ALL RAILING MEMBERS AFTER FABRICATION AND GALVANIZING TO WITHIN ⅛" IN 10 FT. BY MECHANICAL MEANS WITHOUT DAMAGE TO ZINC COATING.

SEE SPECIAL PROVISIONS FOR COATING TO BE APPLIED TO METAL RAILING.

IF SPECIAL SURFACE FINISH IS APPLIED TO CONCRETE BARRIER, COAT TURNBUCKLE COVER PLATE WITH MATCHING COLOR PER METAL RAILING COATING SPECIAL PROVISIONS. IF SPECIAL SURFACE FINISH IS NOT APPLIED TO BARRIER, LEAVE TURNBUCKLE COVER PLATE WITH GALVANIZED FINISH.

INSTALL RAILPOSTS AND SPINDLES NORMAL TO GRADE.

① ½" X 13 COARSE THREAD GALVANIZED FORGED ELECTROLINE STUD SOCKET ASSEMBLY WITH PLUG & SLEEVE, GD-331-X, EXTRA IMPROVED PLOW STEEL WITH MIN. BREAKING STRENGTH OF 10,540 LBS.

② GALVANIZED JAW AND JAW TURNBUCKLE PER ASTM F1145 TYPE 1, GRADE 1 WITH MIN. BREAKING STRENGTH OF 11,000 LBS. USE ONE TURNBUCKLE ON EACH END OF EACH CABLE.

③ 1¼" (AT TYP. EXP. END) OR 3" (AT EXP. END AT EXPANSION JOINT)

④ 1½" (AT TYP. EXP. END) OR 2½" (AT EXP. END AT EXPANSION JOINT)

⑤ 2" (AT TYP. EXP. END) OR 3" (AT EXP. END AT EXPANSION JOINT)

⑥ 1½" (AT TYP. EXP. END) OR 2½" (AT EXP. END AT EXPANSION JOINT)

⑦ ½" (AT TYP. EXP. END) OR 1½" (AT EXP. END AT EXPANSION JOINT)

⑧ 3½" × 5½" × ¼" BENT PLATE (AT TYP. EXP. END)
5½" × 6½" × ¼" BENT PLATE (AT EXP. END AT EXPANSION JOINT)

⑨ AT EXPANSION END PROVIDE 1/16" GAP BETWEEN UNDERSIDE OF BENT PLATE AND UPPER NUT TO ALLOW LATERAL MOVEMENT OF THE RAIL.

⑩ 5" MINIMUM EMBEDMENT, TORQUE TO 30 FT. LBS.

⑪ 3" MINIMUM EMBEDMENT, TORQUE TO 20 FT. LBS.

⑫ 7¼" MINIMUM EMBEDMENT, TORQUE TO 80 FT. LBS.

⑬ ADHESIVE ANCHORAGE WITH ANCHOR ROD PER SPEC. 3385, TYPE A WITH HEX NUT AND WASHER. PROVIDE AN ADHESIVE WITH A MINIMUM CHARACTERISTIC BOND STRENGTH IN UNCRACKED CONCRETE OF 1.5 KSI. EMBED THE ANCHORAGE NO LESS THAN EMBEDMENT SHOWN REGARDLESS OF CHARACTERISTIC BOND STRENGTH. DRILL THROUGH REINFORCEMENT (IF ENCOUNTERED) TO ACHIEVE MINIMUM EMBEDMENT. ENSURE HEX NUT IS IN CONTACT WITH THE ADJACENT SURFACE AND TORQUE TO VALUE SHOWN UNLESS A HIGHER TORQUE IS RECOMMENDED BY THE MANUFACTURER. PROOF LOAD TO 6.0 KIPS. SEE SPECIAL PROVISIONS FOR ADDITIONAL REQUIREMENTS.

REVISED: FEBRUARY 27, 2019

APPROVED: DECEMBER 02, ~~2015~~

STATE BRIDGE ENGINEER

CERTIFIED BY

LICENSED PROFESSIONAL ENGINEER DATE

NAME: LIC. NO.

TITLE: STRUCTURAL TUBE RAILING (DESIGN T-2) FOR CONCRETE J OR F BARRIER

DES:	DR:	APPROVED:	FIG. 5-397.158(A)
CHK:	CHK:		BRIDGE NO.
SHEET NO. OF SHEETS			

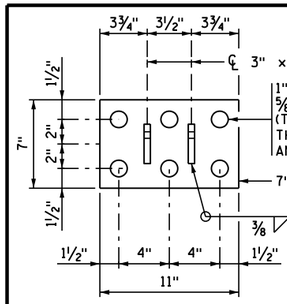

CABLE ANCHOR PLATE DETAIL

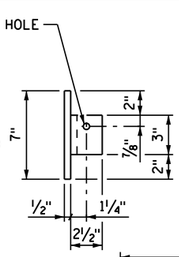

DESIGNER NOTE
(REMOVE PRIOR TO PLOTTING FINAL PLAN):

WHEN USING THIS RAILING ON A NEW BARRIER THE DESIGNER MUST MODIFY THE SINGLE SLOPE BARRIER STANDARD PLAN SHEET TO MATCH THE AESTHETIC COPING DETAILS AND THICKENED END OF BARRIER AS SHOWN ON THIS SHEET. CONSULT REGIONAL BRIDGE ENGINEER IF ADDING THIS RAILING TO AN EXISTING BARRIER.

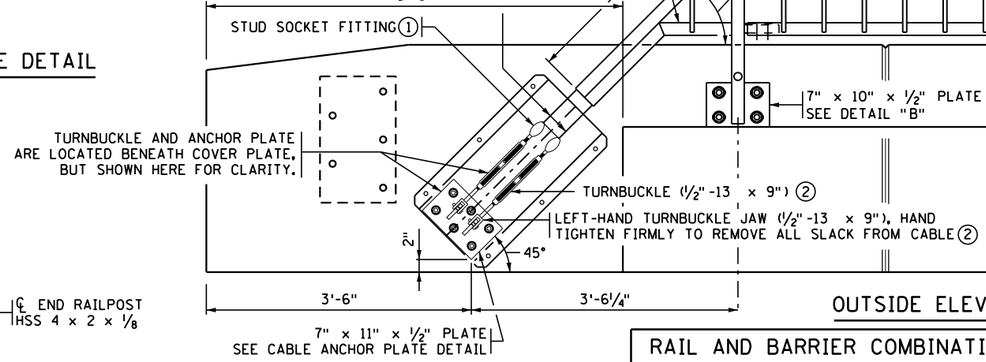

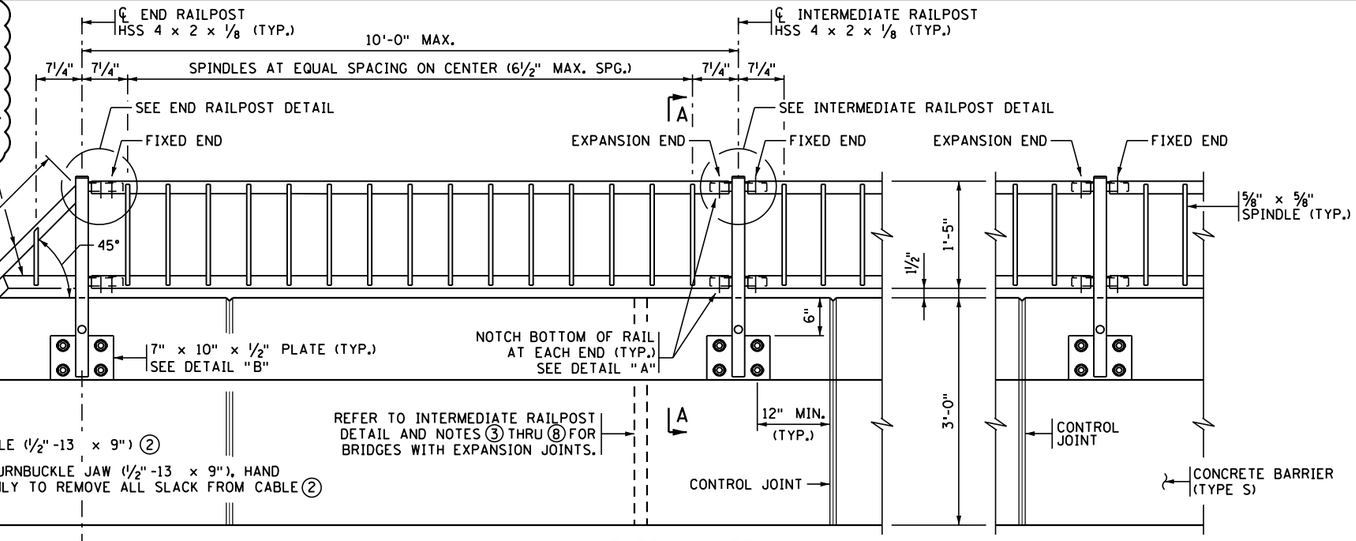

OUTSIDE ELEVATION OF RAILING

RAIL AND BARRIER COMBINATION MEETS TEST LEVEL 4 REQUIREMENTS OF NCHRP REPORT 350.

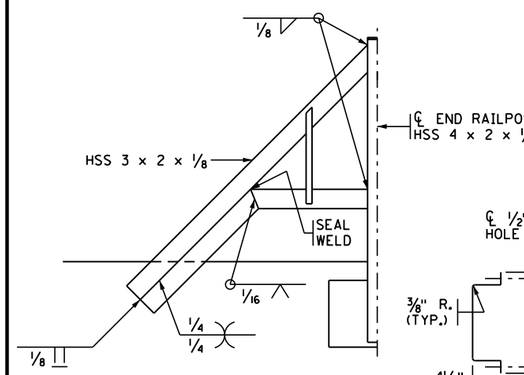

WELDS AT END PANEL

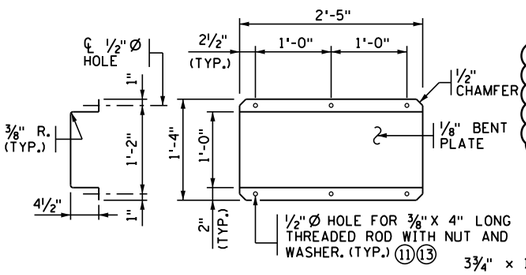

DESIGNER NOTE
(REMOVE PRIOR TO PLOTTING FINAL PLAN):

USE THIS RAILING ONLY ON 36" TYPE S BARRIER. TO COMPLY WITH CRASH TESTING, TOP OF TOP HORIZONTAL RAIL MUST BE SET 4'-6½" ABOVE ROADWAY SURFACE.

COVER PLATE DETAIL

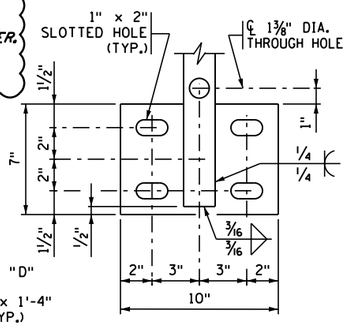

DETAIL "B"

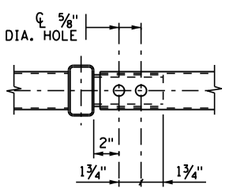

FIXED END

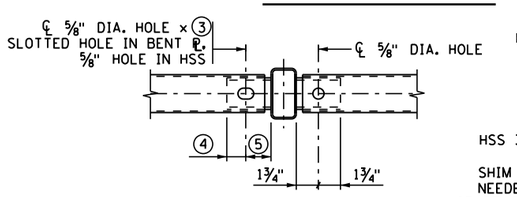

EXPANSION END FIXED END

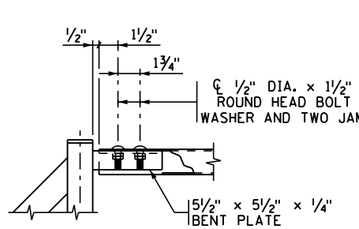

END RAILPOST DETAIL

TOP AND BOTTOM RAIL CONNECTIONS ARE SIMILAR

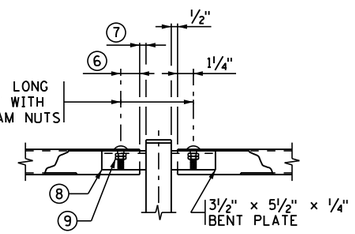

INTERMEDIATE RAILPOST DETAIL

TOP AND BOTTOM RAIL CONNECTIONS ARE SIMILAR

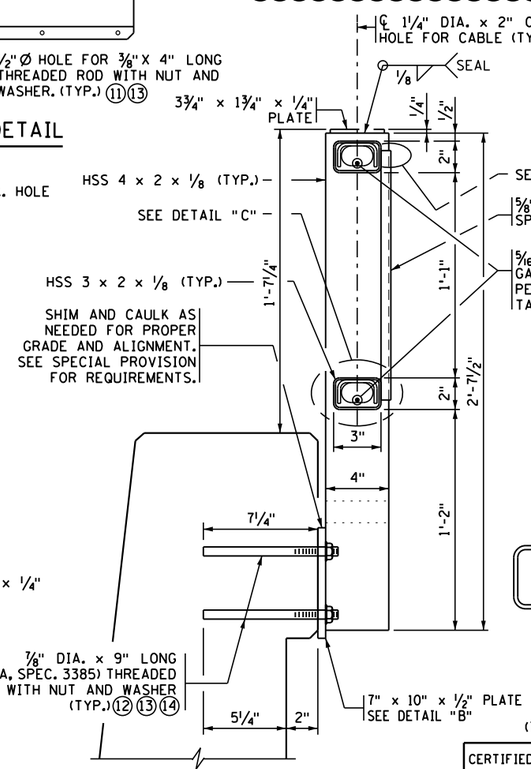

SECTION A-A

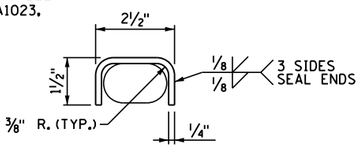

DETAIL "C" - BENT PLATE

(HSS TUBE RAIL NOT SHOWN)

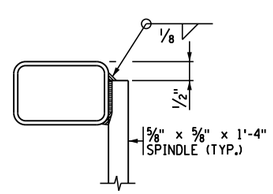

DETAIL "D"

(TYP. TOP AND BOTTOM RAIL)

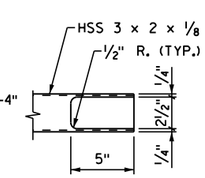

DETAIL "A"

GENERAL NOTES

CONTINUOUSLY GROUND ALL METAL RAILINGS; SEE SPECIAL PROVISIONS. REFER TO THE ELECTRICAL PLANS AND ELECTRICAL SPECIAL PROVISIONS FOR DETAILS REGARDING BONDING MULTIPLE ELECTRICAL GROUNDING SYSTEMS.

REFER TO SUPERSTRUCTURE AND CONCRETE BARRIER SHEETS FOR ADDITIONAL DETAILS AND RAILPOST AND/OR CONTROL JOINT SPACING.

MEASURE PAYMENT LENGTH OF "STRUCTURAL TUBE RAILING (DESIGN T-2)" FROM CABLE ANCHOR PLATE TO CABLE ANCHOR PLATE.

PROVIDE A500, GRADE B STRUCTURAL STEEL TUBING. PROVIDE ALL OTHER STRUCTURAL STEEL PER SPEC. 3306.

GALVANIZE THREADED RODS, BOLTS, NUTS AND WASHERS PER SPEC. 3392. GALVANIZE ALL OTHER STRUCTURAL STEEL PER SPEC. 3394 AFTER FABRICATION. SEAL WELD ALL SURFACES PRIOR TO GALVANIZING.

STRAIGHTEN ALL RAILING MEMBERS AFTER FABRICATION AND GALVANIZING TO WITHIN ⅛" IN 10 FT. BY MECHANICAL MEANS WITHOUT DAMAGE TO ZINC COATING.

SEE SPECIAL PROVISIONS FOR COATING TO BE APPLIED TO METAL RAILING.

IF SPECIAL SURFACE FINISH IS APPLIED TO CONCRETE BARRIER, COAT TURNBUCKLE COVER PLATE WITH MATCHING COLOR PER METAL RAILING COATING SPECIAL PROVISIONS. IF SPECIAL SURFACE FINISH IS NOT APPLIED TO BARRIER, LEAVE TURNBUCKLE COVER PLATE WITH GALVANIZED FINISH.

INSTALL RAILPOSTS AND SPINDLES NORMAL TO GRADE.

① ½" X 13 COARSE THREAD GALVANIZED FORGED ELECTROLINE STUD SOCKET ASSEMBLY WITH PLUG & SLEEVE, GD-331-X, EXTRA IMPROVED PLOW STEEL WITH MIN. BREAKING STRENGTH OF 10,540 LBS.

② GALVANIZED JAW AND JAW TURNBUCKLE PER ASTM F1145 TYPE 1, GRADE 1 WITH MIN. BREAKING STRENGTH OF 11,000 LBS. USE ONE TURNBUCKLE ON EACH END OF EACH CABLE.

③ 1¼" (AT TYP. EXP. END) OR 3" (AT EXP. END AT EXPANSION JOINT)

④ 1½" (AT TYP. EXP. END) OR 2½" (AT EXP. END AT EXPANSION JOINT)

⑤ 2" (AT TYP. EXP. END) OR 3" (AT EXP. END AT EXPANSION JOINT)

⑥ 1½" (AT TYP. EXP. END) OR 2½" (AT EXP. END AT EXPANSION JOINT)

⑦ ½" (AT TYP. EXP. END) OR 1½" (AT EXP. END AT EXPANSION JOINT)

⑧ 3½" × 5½" × ¼" BENT PLATE (AT TYP. EXP. END)
5½" × 6½" × ¼" BENT PLATE (AT EXP. END AT EXPANSION JOINT)

⑨ AT EXPANSION END PROVIDE 1/16" GAP BETWEEN UNDERSIDE OF BENT PLATE AND UPPER NUT TO ALLOW LATERAL MOVEMENT OF THE RAIL.

⑩ 5" MINIMUM EMBEDMENT, TORQUE TO 30 FT. LBS.

⑪ 3" MINIMUM EMBEDMENT, TORQUE TO 20 FT. LBS.

⑫ 7¼" MINIMUM EMBEDMENT, TORQUE TO 80 FT. LBS.

⑬ ADHESIVE ANCHORAGE WITH ANCHOR ROD PER SPEC. 3385, TYPE A WITH HEX NUT AND WASHER. PROVIDE AN ADHESIVE WITH A MINIMUM CHARACTERISTIC BOND STRENGTH IN UNCRACKED CONCRETE OF 1.5 KSI. EMBED THE ANCHORAGE NO LESS THAN EMBEDMENT SHOWN REGARDLESS OF CHARACTERISTIC BOND STRENGTH. DRILL THROUGH REINFORCEMENT (IF ENCOUNTERED) TO ACHIEVE MINIMUM EMBEDMENT. ENSURE HEX NUT IS IN CONTACT WITH THE ADJACENT SURFACE AND TORQUE TO VALUE SHOWN UNLESS A HIGHER TORQUE IS RECOMMENDED BY THE MANUFACTURER. PROOF LOAD TO 6.0 KIPS. SEE SPECIAL PROVISIONS FOR ADDITIONAL REQUIREMENTS.

⑭ CORE DRILL THE FIRST 2" OF THE HOLE TO REDUCE THE RISK OF DAMAGE TO THE EDGE OF THE COPING. DEPTH OF CORE DRILLED HOLE NOT TO EXCEED 2". HAMMER DRILL THE REMAINING 5¼". ONLY THE BOTTOM 2 HOLES NEED TO BE CORE DRILLED AT EACH POST.

REVISED: FEBRUARY 27, 2019

APPROVED: FEBRUARY 22, 2018

Kevin Western
STATE BRIDGE ENGINEER

CERTIFIED BY
LICENSED PROFESSIONAL ENGINEER DATE
NAME: LIC. NO.

TITLE: STRUCTURAL TUBE RAILING (DESIGN T-2) FOR 36" CONCRETE S BARRIER

DES:	DR:	APPROVED:	FIG. 5-397.158(B)
CHK:	CHK:		BRIDGE NO.
SHEET NO. OF SHEETS			

DESIGNER NOTE:
CHOOSE ONE JOINT OPENING NOTE AND DELETE OTHER, MAX 4".

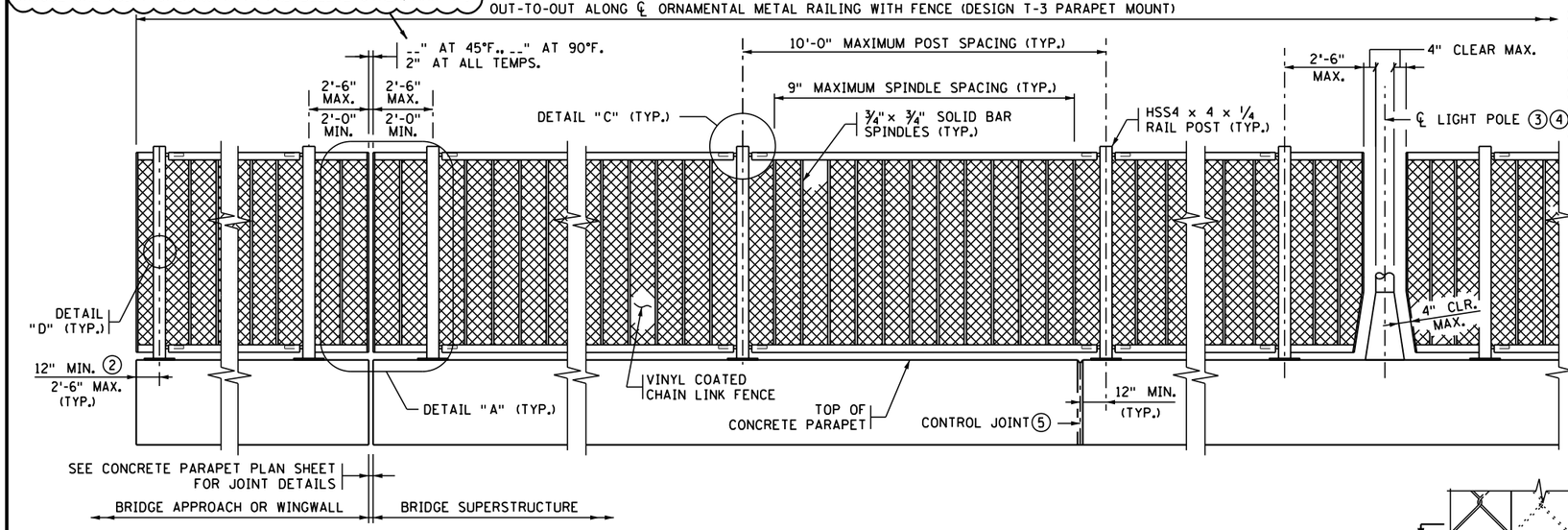

PARTIAL INSIDE ELEVATION OF ORNAMENTAL METAL RAILING WITH FENCE (DESIGN T-3)

DESIGNER NOTE
(REMOVE PRIOR TO PLOTTING FINAL PLAN):
FOR ROADWAY DESIGN SPEEDS GREATER THAN 45 MPH T-3 ORNAMENTAL RAILINGS MUST BE PROTECTED BY A TRAFFIC BARRIER.
CHOOSE ONE HEIGHT FROM RAILING HEIGHT TABLE AND CROSS OUT OTHER HEIGHTS.
RAIL HEIGHTS GREATER THAN SHOWN REQUIRE SPECIAL DESIGN.

RAILING HEIGHT TABLE

NOMINAL HEIGHT	Ⓐ	Ⓑ	Ⓒ
6'-0"	3'-4"	2'-7"	3'-0"
8'-0"	5'-4"	4'-7"	5'-0"
10'-0"	7'-4"	6'-7"	7'-0"

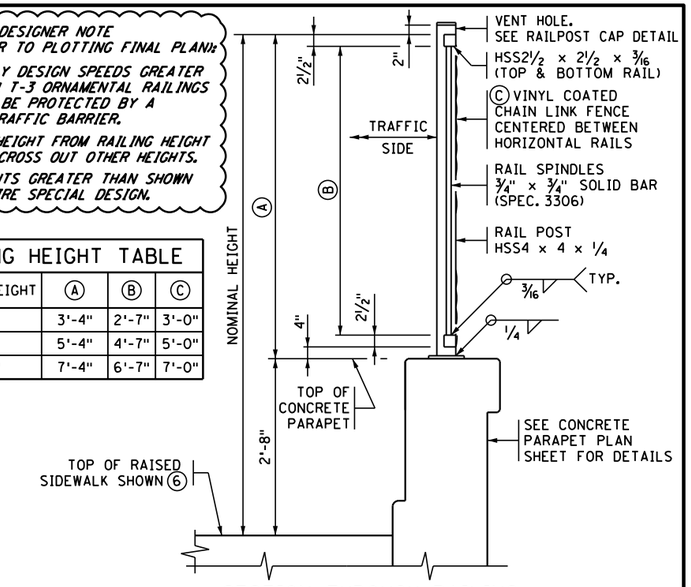

SECTION THROUGH RAILING

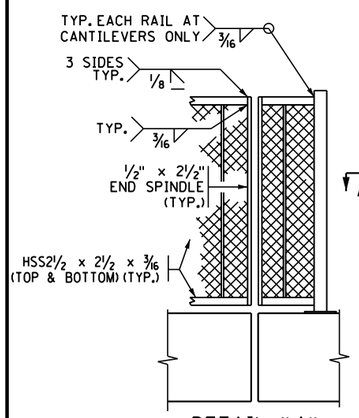

DETAIL "A"

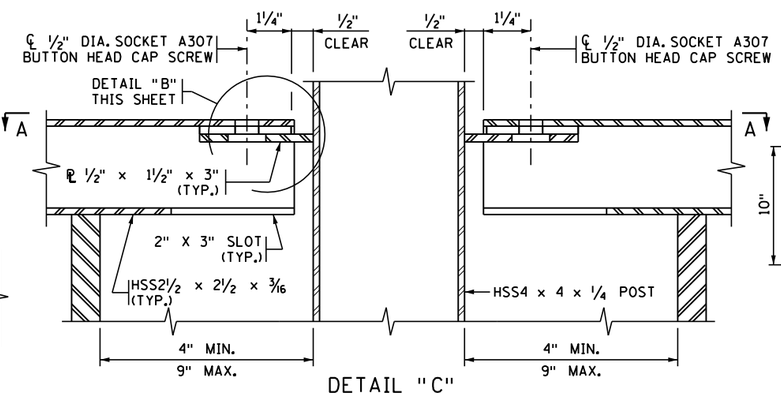

DETAIL "C"

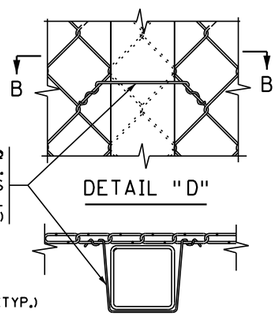

DETAIL "D"

SECTION B-B

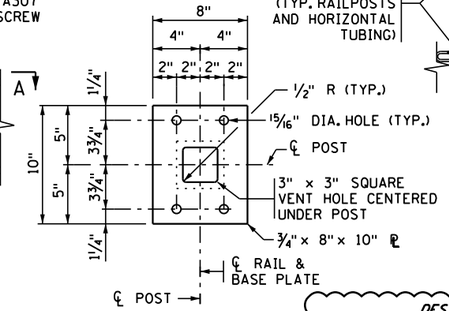

BASE PLATE

DESIGNER NOTE
(REMOVE PRIOR TO PLOTTING FINAL PLAN):
DESIGNER SHALL CONSULT WITH BRIDGE OFFICE ARCHITECTURAL SPECIALIST TO CHOOSE ONE OPTION (NORMAL OR PLUMB) AND DELETE THE OTHER.

GENERAL NOTES

CONTINUOUSLY GROUND ALL METAL RAILINGS; SEE THE SPECIAL PROVISIONS. REFER TO THE ELECTRICAL PLANS AND ELECTRICAL SPECIAL PROVISIONS FOR DETAILS REGARDING BONDING MULTIPLE ELECTRICAL GROUNDING SYSTEMS.

PAYMENT LENGTH SHALL BE MEASURED AS THE OUT TO OUT LENGTH ALONG THE CENTERLINE OF THE RAILING BETWEEN THE OUTSIDE ENDS, WITH DEDUCTIONS FOR THE LENGTH OF CONCRETE POSTS, IF PRESENT.

USE A500, GRADE B STRUCTURAL STEEL TUBING (HSS) IN THE RAIL CONFORMING TO SPEC. 3361. PROVIDE ALL OTHER STEEL IN ACCORDANCE WITH SPEC. 3306.

GALVANIZE BOLTS, NUTS, WASHERS AND ANCHORS IN ACCORDANCE WITH SPEC. 3392. GALVANIZE ALL OTHER STRUCTURAL STEEL IN ACCORDANCE WITH SPEC. 3394, AFTER FABRICATION.

SEE SPECIAL PROVISIONS FOR COATING TO BE APPPLIED TO METAL RAILING.

INSTALL RAIL POSTS AND SPINDLES *[NORMAL TO GRADE OR PLUMB.]*

CURVE HORIZONTAL RAILS WHERE APPLICABLE AND PLACE RAILS PARALLEL TO THE EDGE OF SIDEWALK PROFILE.

ALWAYS USE CHAIN LINK FENCE WITH THIS RAILING. REFER TO SPEC. 2557 FOR CHAIN LINK FABRIC AND TIE REQUIREMENTS.

SEE SPECIAL PROVISIONS FOR REQUIREMENTS NOT INCLUDED ON THIS SHEET.

DRILL ½" DIA. MAX. VENT HOLES ON THE UNDERSIDE OF RAIL TUBES AS NECESSARY TO FACILITATE GALVANIZING.

① DRILL VENT HOLE IN THE RAIL POST WITHIN 2" OF THE UNDERSIDE OF THE CAP, ON THE NON-TRAFFIC SIDE OF THE POST AS NECESSARY TO FACILITATE GALVANIZING. MAXIMUM HOLE SIZE IS ½" DIA.

② PLACE ℄ OF END POST 12" FROM END OF CONCRETE PARAPET IF GUARDRAIL CONNECTION PLATE IS PRESENT.

③ IF LIGHT POLE IS MOUNTED ON BLISTER, RAILING MAY BE CONTINUOUS IN FRONT OF LIGHT POLE (SEE PARAPET & LIGHT POLE DETAILS).

④ CONTRACTOR TO COORDINATE LIGHT POLE DETAILS WITH THE RAILING FABRICATOR TO ENSURE PROPER CLEARANCES AND RAILING CONFIGURATION ADJACENT TO THE POLE.

⑤ SEE SUPERSTRUCTURE AND CONCRETE PARAPET PLAN SHEETS FOR CONTROL JOINT SPACING AND DETAILS.

⑥ FOR NON-RAISED SIDEWALK, SEE CONCRETE PARAPET PLAN SHEET.

⑦ ADHESIVE ANCHORAGE WITH ⅝" DIA. ANCHOR ROD IN ACCORDANCE WITH SPEC. 3385, TYPE A WITH HEX NUT AND WASHER. PROVIDE AN ADHESIVE WITH A MINIMUM CHARACTERISTIC BOND STRENGTH IN UNCRACKED CONCRETE OF 1.5 KSI. EMBED THE ANCHORAGE NO LESS THAN 6" REGARDLESS OF CHARACTERISTIC BOND STRENGTH. DRILL THROUGH REINFORCEMENT (IF ENCOUNTERED) TO ACHIEVE MINIMUM EMBEDMENT. ENSURE HEX NUT IS IN CONTACT WITH THE ADJACENT SURFACE AND TORQUE TO 60 FT-LBS UNLESS A HIGHER TORQUE IS RECOMMENDED BY THE MANUFACTURER. PROOF LOAD TO 7.7 KIPS. SEE SPECIAL PROVISIONS FOR ADDITIONAL REQUIREMENTS.

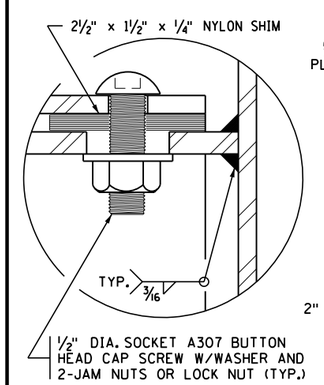

DETAIL "B"

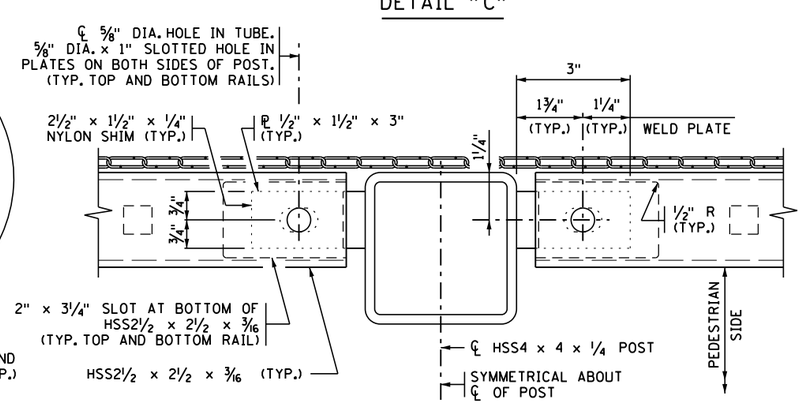

SECTION A-A

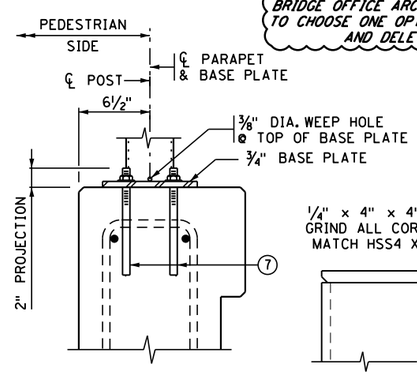

ANCHOR DETAIL

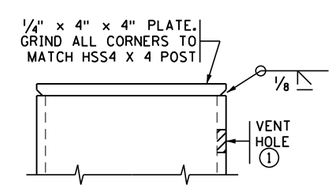

RAILPOST CAP DETAIL

REVISION: OCTOBER 22, 2019

APPROVED: NOVEMBER 6, 2013
Nancy Daubenberger
STATE BRIDGE ENGINEER

CERTIFIED BY _____ LICENSED PROFESSIONAL ENGINEER _____ DATE
NAME: LIC. NO.

TITLE: ORNAMENTAL METAL RAILING WITH FENCE (DESIGN T-3 PARAPET MOUNT)

DES:	DR:	APPROVED:	FIG. 5-397.160
CHK:	CHK:		BRIDGE NO.
SHEET NO. OF SHEETS			

DESIGNER NOTE:
CHOOSE ONE JOINT OPENING NOTE AND DELETE OTHER, MAX 4".

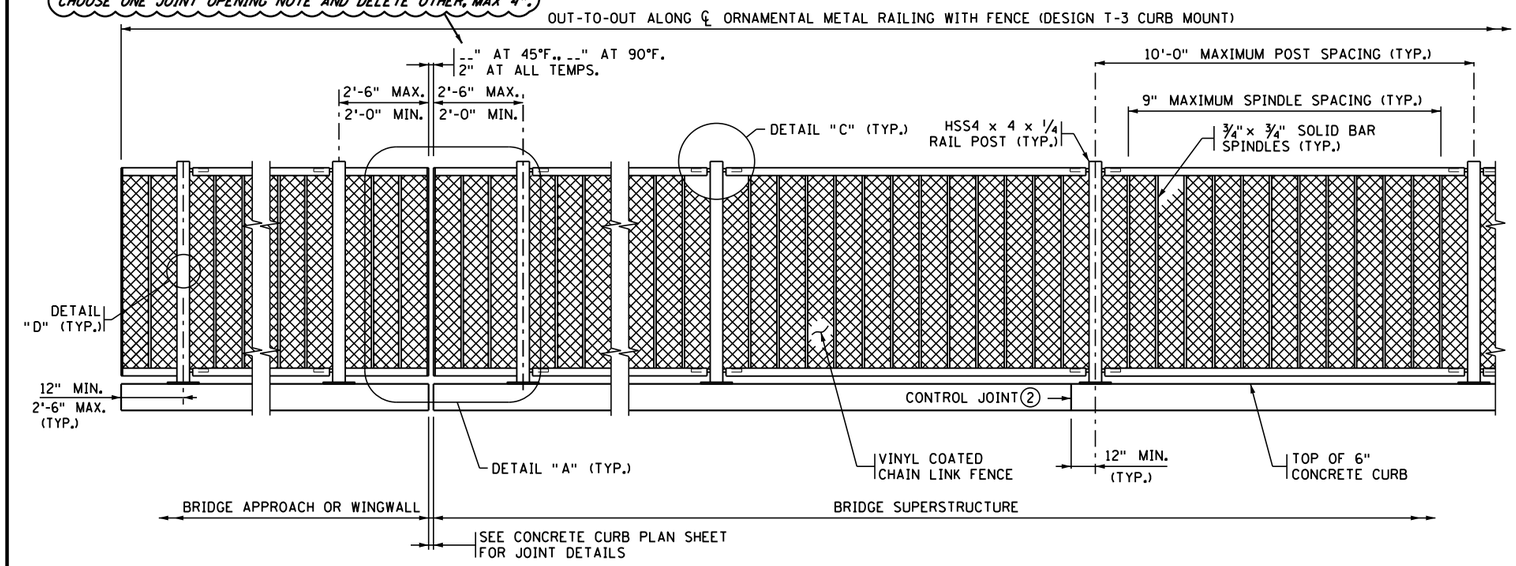

PARTIAL INSIDE ELEVATION OF ORNAMENTAL METAL RAILING WITH FENCE (DESIGN T-3)

RAILING HEIGHT TABLE			
NOMINAL HEIGHT	Ⓐ	Ⓑ	Ⓒ
4'-6"	4'-0"	3'-3"	3'-6"
6'-0"	5'-6"	4'-9"	5'-0"
8'-0"	7'-6"	6'-9"	7'-0"

DESIGNER NOTE
(REMOVE PRIOR TO PLOTTING FINAL PLAN):
CHOOSE ONE HEIGHT FROM RAILING HEIGHT TABLE AND CROSS OUT OTHER HEIGHTS. RAIL HEIGHTS GREATER THAN SHOWN REQUIRE SPECIAL DESIGN.

DESIGNER NOTE
(REMOVE PRIOR TO PLOTTING FINAL PLAN):
T-3 ORNAMENTAL METAL RAILINGS MOUNTED ON A CURB MUST BE PROTECTED BY A TRAFFIC BARRIER.

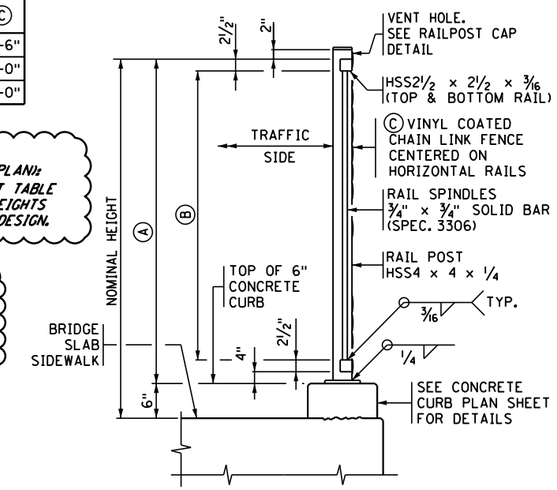

SECTION THROUGH CURB
(8'-0" TALL OPTION SHOWN)

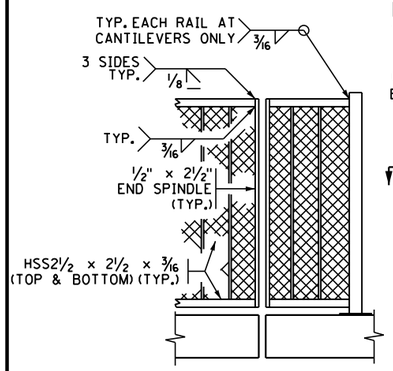

DETAIL "A"

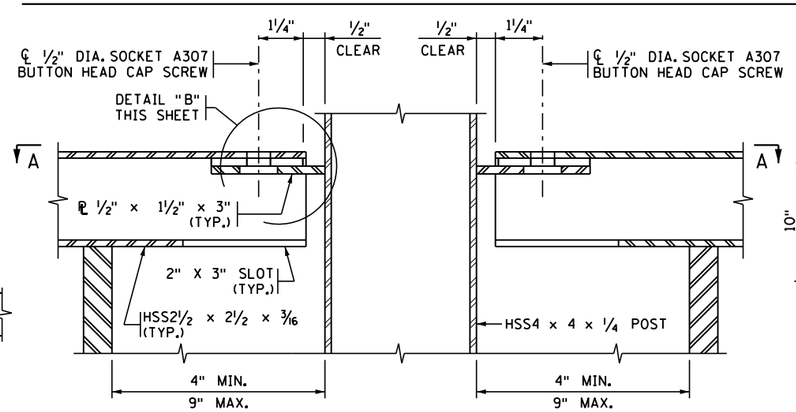

DETAIL "C"

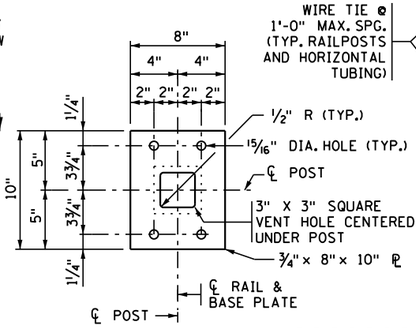

BASE PLATE

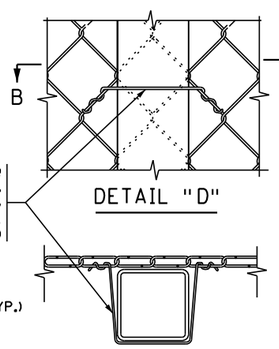

DETAIL "D"

SECTION B-B

DESIGNER NOTE
(REMOVE PRIOR TO PLOTTING FINAL PLAN):
DESIGNER SHALL CONSULT WITH BRIDGE OFFICE ARCHITECTURAL SPECIALIST TO CHOOSE ONE OPTION (NORMAL OR PLUMB) AND DELETE THE OTHER.

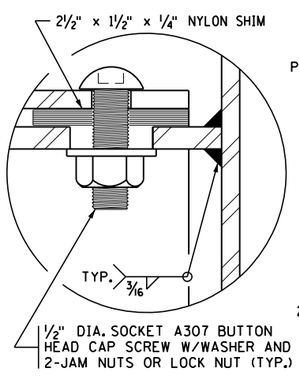

DETAIL "B"

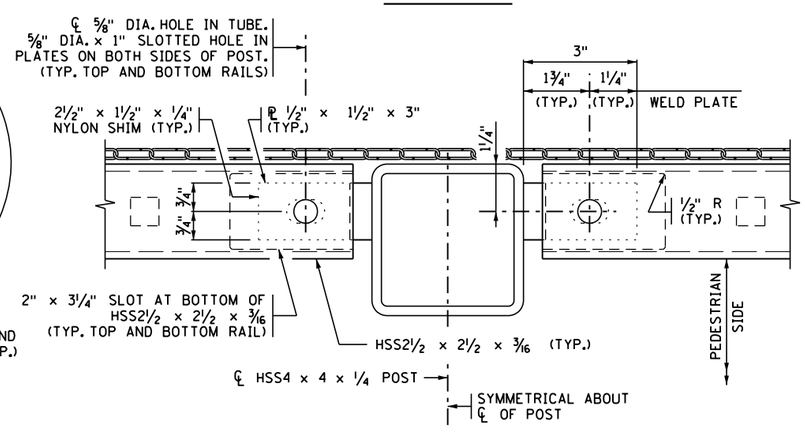

SECTION A-A

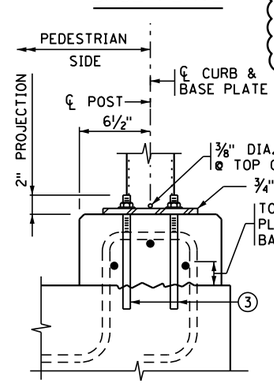

ANCHOR DETAIL

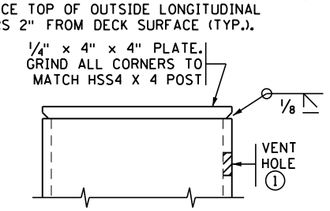

RAILPOST CAP DETAIL

GENERAL NOTES

CONTINUOUSLY GROUND ALL METAL RAILINGS; SEE THE SPECIAL PROVISIONS. REFER TO THE ELECTRICAL PLANS AND ELECTRICAL SPECIAL PROVISIONS FOR DETAILS REGARDING BONDING MULTIPLE ELECTRICAL GROUNDING SYSTEMS.

PAYMENT LENGTH SHALL BE MEASURED AS THE OUT TO OUT LENGTH ALONG THE CENTERLINE OF THE RAILING BETWEEN THE OUTSIDE ENDS, WITH DEDUCTIONS FOR THE LENGTH OF CONCRETE POSTS, IF PRESENT.

PROVIDE A500, GRADE B STRUCTURAL STEEL TUBING (HSS) IN THE RAIL CONFORMING TO SPEC. 3361. PROVIDE ALL OTHER STEEL IN ACCORDANCE WITH SPEC. 3306.

GALVANIZE BOLTS, NUTS, WASHERS AND ANCHORS IN ACCORDANCE WITH SPEC. 3392. GALVANIZE ALL OTHER STRUCTURAL STEEL IN ACCORDANCE WITH SPEC. 3394, AFTER FABRICATION.

SEE SPECIAL PROVISIONS FOR COATING TO BE APPPLIED TO METAL RAILING.

INSTALL RAIL POSTS AND SPINDLES *[NORMAL TO GRADE OR PLUMB.]*

CURVE HORIZONTAL RAILS WHERE APPLICABLE AND PLACE RAILS PARALLEL TO THE EDGE OF SIDEWALK PROFILE.

ALWAYS USE CHAIN LINK FENCE WITH THIS RAILING. REFER TO SPEC. 2557 FOR CHAIN LINK FABRIC AND TIE REQUIREMENTS.

SEE SPECIAL PROVISIONS FOR REQUIREMENTS NOT INCLUDED ON THIS SHEET.

DRILL 1/2" DIA. MAX. VENT HOLES ON THE UNDERSIDE OF RAIL TUBES AS NECESSARY TO FACILITATE GALVANIZING.

1 DRILL VENT HOLE IN THE RAIL POST WITHIN 2" OF THE UNDERSIDE OF THE CAP, ON THE NON-TRAFFIC SIDE OF THE POST AS NECESSARY TO FACILITATE GALVANIZING. MAXIMUM HOLE SIZE IS 1/2" DIA.

2 SEE SUPERSTRUCTURE AND CONCRETE CURB PLAN SHEETS FOR CONTROL JOINT SPACING AND DETAILS.

3 ADHESIVE ANCHORAGE WITH 5/8" DIA. ANCHOR ROD IN ACCORDANCE WITH SPEC. 3385, TYPE A WITH HEX NUT AND WASHER. PROVIDE AN ADHESIVE WITH A MINIMUM CHARACTERISTIC BOND STRENGTH IN UNCRACKED CONCRETE OF 1.5 KSI. EMBED THE ANCHORAGE NO LESS THAN 8" REGARDLESS OF CHARACTERISTIC BOND STRENGTH. DRILL THROUGH REINFORCEMENT (IF ENCOUNTERED) TO ACHIEVE MINIMUM EMBEDMENT. ENSURE HEX NUT IS IN CONTACT WITH THE ADJACENT SURFACE AND TORQUE TO 60 FT-LBS UNLESS A HIGHER TORQUE IS RECOMMENDED BY THE MANUFACTURER. PROOF LOAD TO 8.8 KIPS. SEE SPECIAL PROVISIONS FOR ADDITIONAL REQUIREMENTS.

REVISION: OCTOBER 22, 2019

APPROVED: NOVEMBER 6, 2013
Nancy Daubenberger
STATE BRIDGE ENGINEER

CERTIFIED BY _____ LICENSED PROFESSIONAL ENGINEER _____ DATE
NAME: LIC. NO.

TITLE: ORNAMENTAL METAL RAILING WITH FENCE (DESIGN T-3 CURB MOUNT)

DES:	DR:	APPROVED:	FIG. 5-397.161
CHK:	CHK:		BRIDGE NO.
SHEET NO. OF SHEETS			

DESIGNER NOTE:
CHOOSE ONE JOINT OPENING NOTE AND DELETE OTHER, MAX 4".

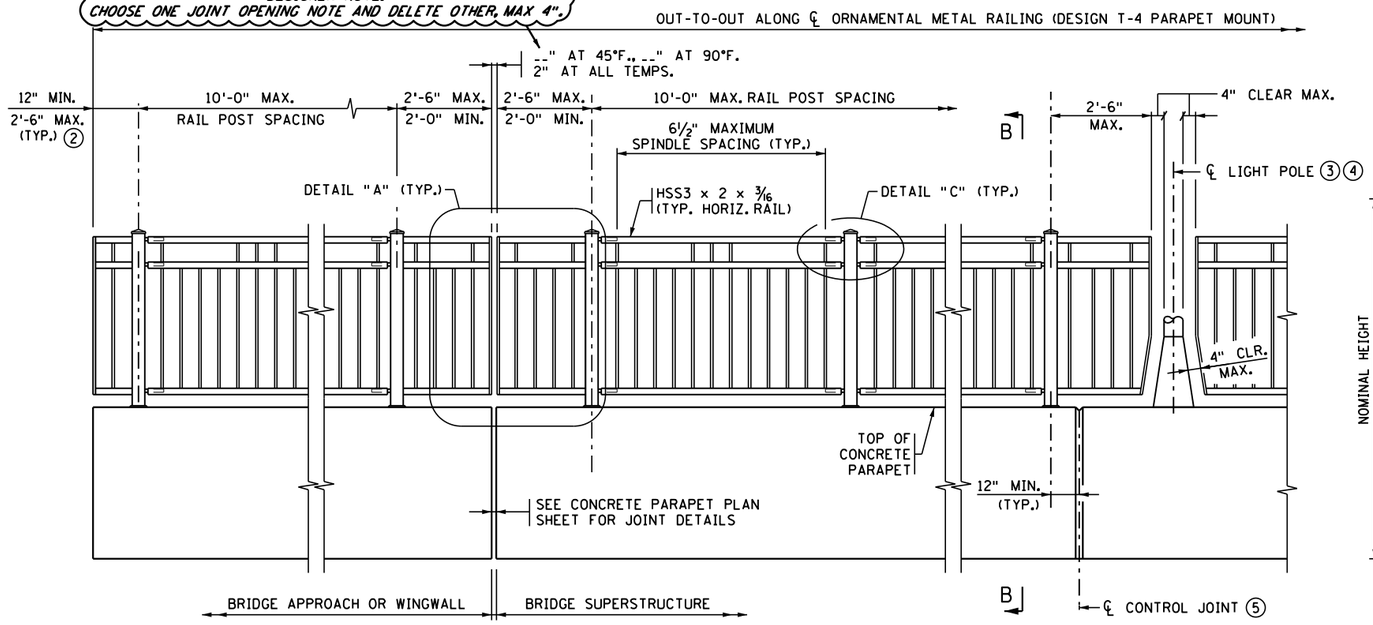

INSIDE ELEVATION OF RAILING

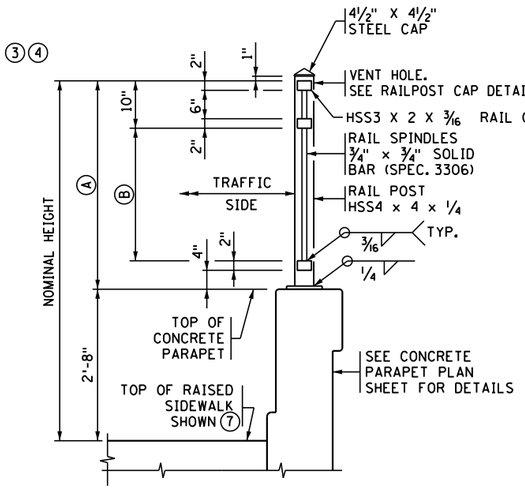

SECTION B-B

(6'-0" TALL OPTION SHOWN)

RAILING HEIGHT TABLE		
NOMINAL HEIGHT	Ⓐ	Ⓑ
6'-0"	3'-4"	2'-0"
8'-0"	5'-4"	4'-0"
10'-0"	7'-4"	6'-0"

DESIGNER NOTE
(REMOVE PRIOR TO PLOTTING FINAL PLAN):
FOR ROADWAY DESIGN SPEEDS GREATER THAN 45 MPH T-4 ORNAMENTAL RAILINGS MUST BE PROTECTED BY A TRAFFIC BARRIER.

CHOOSE ONE HEIGHT FROM RAILING HEIGHT TABLE AND CROSS OUT OTHER HEIGHTS.

RAIL HEIGHTS GREATER THAN SHOWN REQUIRE SPECIAL DESIGN.

GENERAL NOTES

CONTINUOUSLY GROUND ALL METAL RAILINGS; SEE THE SPECIAL PROVISIONS. REFER TO THE ELECTRICAL PLANS AND ELECTRICAL SPECIAL PROVISIONS FOR DETAILS REGARDING BONDING MULTIPLE ELECTRICAL GROUNDING SYSTEMS.

PAYMENT LENGTH SHALL BE MEASURED AS THE OUT TO OUT LENGTH ALONG THE CENTERLINE OF THE RAILING BETWEEN THE OUTSIDE ENDS, WITH DEDUCTIONS FOR THE LENGTH OF CONCRETE POSTS, IF PRESENT.

PROVIDE A500, GRADE B STRUCTURAL STEEL TUBING (HSS) IN THE RAIL CONFORMING TO SPEC. 3361. PROVIDE ALL OTHER STEEL IN ACCORDANCE WITH SPEC. 3306.

GALVANIZE BOLTS, NUTS, WASHERS AND ANCHORS IN ACCORDANCE WITH SPEC. 3392. GALVANIZE ALL OTHER STRUCTURAL STEEL IN ACCORDANCE WITH SPEC. 3394, AFTER FABRICATION.

SEE SPECIAL PROVISIONS FOR COATING TO BE APPPLIED TO METAL RAILING.

INSTALL RAIL POSTS AND SPINDLES *[NORMAL TO GRADE OR PLUMB.]*

DESIGNER NOTE
(REMOVE PRIOR TO PLOTTING FINAL PLAN):
DESIGNER SHALL CONSULT WITH BRIDGE OFFICE ARCHITECTURAL SPECIALIST TO CHOOSE ONE OPTION (NORMAL OR PLUMB) AND DELETE THE OTHER.

CURVE HORIZONTAL RAILS WHERE APPLICABLE AND PLACE RAILS PARALLEL TO THE EDGE OF SIDEWALK PROFILE.

SEE SPECIAL PROVISIONS FOR REQUIREMENTS NOT INCLUDED ON THIS SHEET.

DRILL ½" DIA. MAX. VENT HOLES ON THE UNDERSIDE OF RAIL TUBES AS NECESSARY TO FACILITATE GALVANIZING.

① DRILL VENT HOLE IN THE RAIL POST WITHIN 2" OF THE UNDERSIDE OF THE CAP, ON THE NON-TRAFFIC SIDE OF THE POST AS NECESSARY TO FACILITATE GALVANIZING. MAXIMUM HOLE SIZE IS ½" DIA.

② PLACE ℄ OF END POST 12" FROM END OF CONCRETE PARAPET IF GUARDRAIL CONNECTION PLATE IS PRESENT.

③ IF LIGHT POLE IS MOUNTED ON BLISTER, RAILING MAY BE CONTINUOUS IN FRONT OF LIGHT POLE (SEE PARAPET & LIGHT POLE DETAILS).

④ CONTRACTOR TO COORDINATE LIGHT POLE DETAILS WITH THE RAILING FABRICATOR TO ENSURE PROPER CLEARANCES AND RAILING CONFIGURATION ADJACENT TO THE POLE.

⑤ SEE SUPERSTRUCTURE AND CONCRETE PARAPET PLAN SHEETS FOR CONTROL JOINT SPACING AND DETAILS.

⑥ PROVIDE A PYRAMID TOP STYLE STEEL CAP WELDED TO TOP OF POST WITH A SURFACE FINISH OF 1000 MICRO-INCH, OR SMOOTHER, PRIOR TO GALVANIZING.

⑦ FOR NON-RAISED SIDEWALK, SEE CONCRETE PARAPET PLAN SHEET.

⑧ ADHESIVE ANCHORAGE WITH ⅝" DIA. ANCHOR ROD IN ACCORDANCE WITH SPEC. 3385, TYPE A WITH HEX NUT AND WASHER. PROVIDE AN ADHESIVE WITH A MINIMUM CHARACTERISTIC BOND STRENGTH IN UNCRACKED CONCRETE OF 1.5 KSI. EMBED THE ANCHORAGE NO LESS THAN 5" REGARDLESS OF CHARACTERISTIC BOND STRENGTH. DRILL THROUGH REINFORCEMENT (IF ENCOUNTERED) TO ACHIEVE MINIMUM EMBEDMENT. ENSURE HEX NUT IS IN CONTACT WITH THE ADJACENT SURFACE AND TORQUE TO 60 FT-LBS UNLESS A HIGHER TORQUE IS RECOMMENDED BY THE MANUFACTURER. PROOF LOAD TO 6.9 KIPS. SEE SPECIAL PROVISIONS FOR ADDITIONAL REQUIREMENTS.

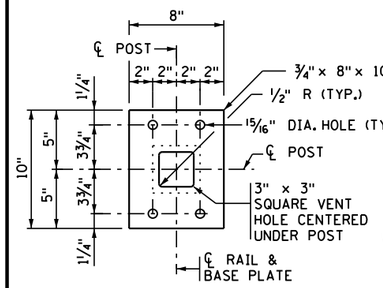

BASE PLATE

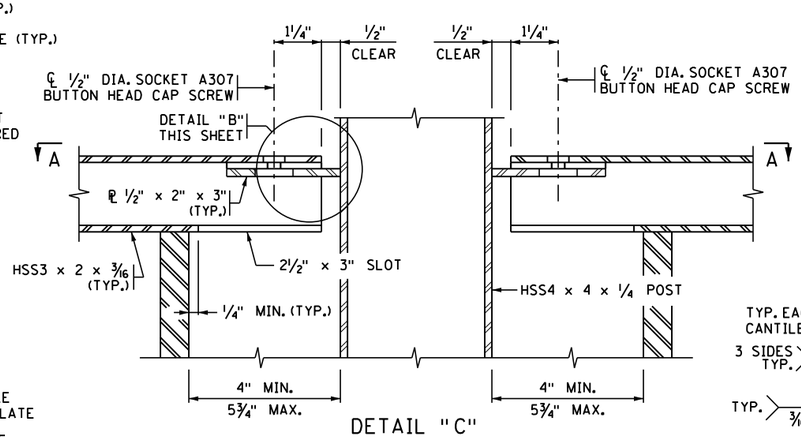

DETAIL "C"

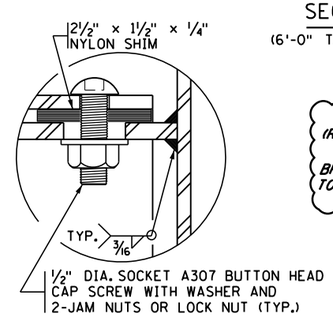

DETAIL "B"

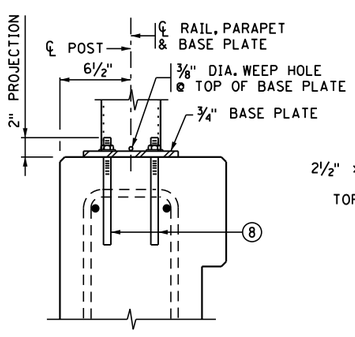

ANCHOR DETAIL

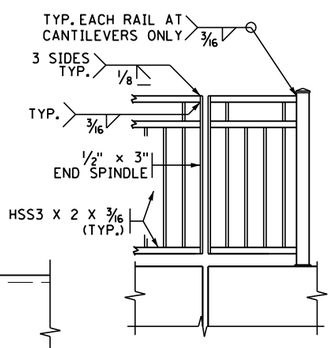

DETAIL "A"

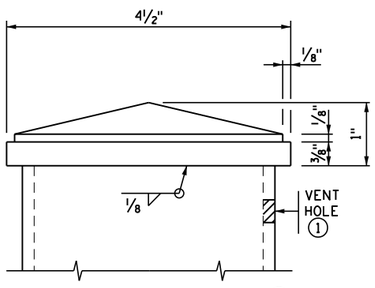

RAILPOST CAP DETAIL ⑥

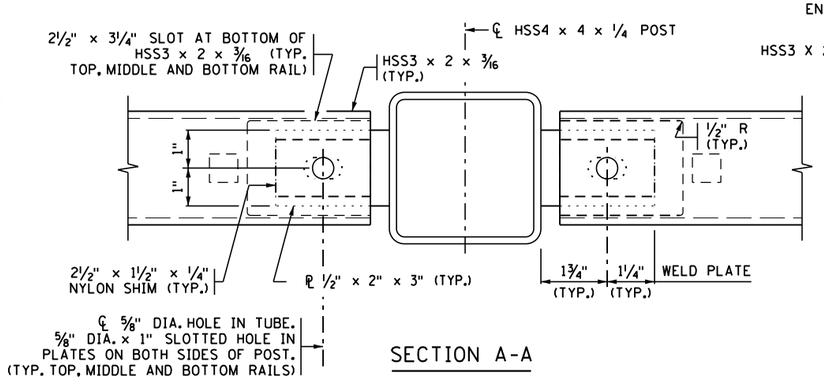

SECTION A-A

REVISION: OCTOBER 22, 2019

APPROVED: NOVEMBER 6, 2013

Nancy Daubenberger
STATE BRIDGE ENGINEER

CERTIFIED BY _____ LICENSED PROFESSIONAL ENGINEER _____ DATE

NAME: LIC. NO.

TITLE: ORNAMENTAL METAL RAILING (DESIGN T-4 PARAPET MOUNT)

DES:	DR:	APPROVED:	FIG. 5-397.162
CHK:	CHK:		BRIDGE NO.
SHEET NO. OF SHEETS			

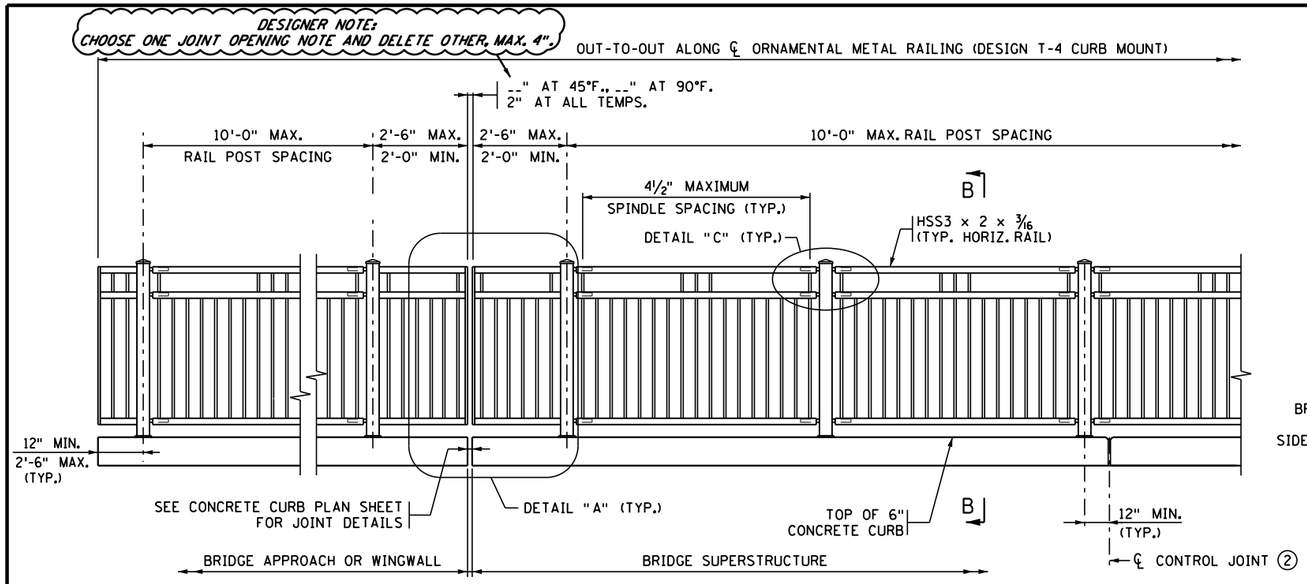

INSIDE ELEVATION OF RAILING

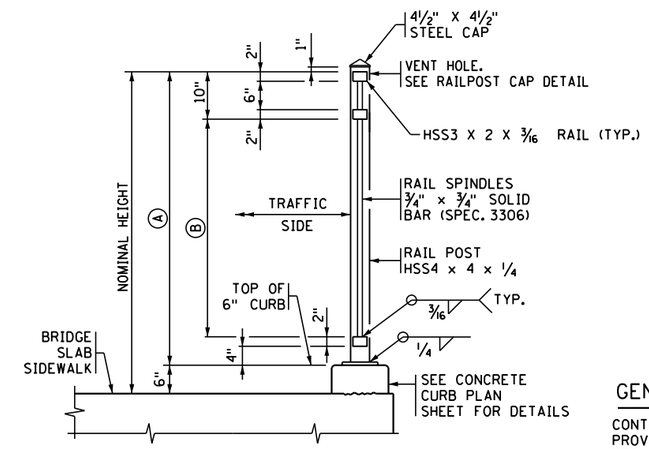

SECTION B-B

(6'-0" TALL OPTION SHOWN)

RAILING HEIGHT TABLE		
NOMINAL HEIGHT	Ⓐ	Ⓑ
4'-6"	4'-0"	2'-8"
6'-0"	5'-6"	4'-2"
8'-0"	7'-6"	6'-2"

DESIGNER NOTE
(REMOVE PRIOR TO PLOTTING FINAL PLAN):
CHOOSE ONE HEIGHT FROM RAILING HEIGHT TABLE AND CROSS OUT OTHER HEIGHTS. RAIL HEIGHTS GREATER THAN SHOWN REQUIRE SPECIAL DESIGN.

DESIGNER NOTE
(REMOVE PRIOR TO PLOTTING FINAL PLAN):
T-4 ORNAMENTAL METAL RAILINGS MOUNTED ON A CURB MUST BE PROTECTED BY A TRAFFIC BARRIER.

GENERAL NOTES

CONTINUOUSLY GROUND ALL METAL RAILINGS; SEE THE SPECIAL PROVISIONS. REFER TO THE ELECTRICAL PLANS AND ELECTRICAL SPECIAL PROVISIONS FOR DETAILS REGARDING BONDING MULTIPLE ELECTRICAL GROUNDING SYSTEMS.

PAYMENT LENGTH SHALL BE MEASURED AS THE OUT TO OUT LENGTH ALONG THE CENTERLINE OF THE RAILING BETWEEN THE OUTSIDE ENDS, WITH DEDUCTIONS FOR THE LENGTH OF CONCRETE POSTS, IF PRESENT.

PROVIDE A500, GRADE B STRUCTURAL STEEL TUBING (HSS) IN THE RAIL CONFORMING TO SPEC. 3361. PROVIDE ALL OTHER STEEL IN ACCORDANCE WITH SPEC. 3306.

GALVANIZE BOLTS, NUTS, WASHERS AND ANCHORS IN ACCORDANCE WITH SPEC. 3392. GALVANIZE ALL OTHER STRUCTURAL STEEL IN ACCORDANCE WITH SPEC. 3394, AFTER FABRICATION.

SEE SPECIAL PROVISIONS FOR COATING TO BE APPPLIED TO METAL RAILING.

DESIGNER NOTE
(REMOVE PRIOR TO PLOTTING FINAL PLAN):
DESIGNER SHALL CONSULT WITH BRIDGE OFFICE ARCHITECTURAL SPECIALIST TO CHOOSE ONE OPTION (NORMAL OR PLUMB) AND DELETE THE OTHER.

INSTALL RAIL POSTS AND SPINDLES *[NORMAL TO GRADE OR PLUMB.]*

CURVE HORIZONTAL RAILS WHERE APPLICABLE AND PLACE RAILS PARALLEL TO THE EDGE OF SIDEWALK PROFILE.

SEE SPECIAL PROVISIONS FOR REQUIREMENTS NOT INCLUDED ON THIS SHEET.

DRILL ½" DIA. MAX. VENT HOLES ON THE UNDERSIDE OF RAIL TUBES AS NECESSARY TO FACILITATE GALVANIZING.

① DRILL VENT HOLE IN THE RAIL POST WITHIN 2" OF THE UNDERSIDE OF THE CAP, ON THE NON-TRAFFIC SIDE OF THE POST AS NECESSARY TO FACILITATE GALVANIZING. MAXIMUM HOLE SIZE IS ½" DIA.

② SEE CONCRETE CURB PLAN SHEET FOR CONTROL JOINT SPACING AND DETAILS.

③ PROVIDE A PYRAMID TOP STYLE STEEL CAP WELDED TO TOP OF POST WITH A SURFACE FINISH OF 1000 MICRO-INCH, OR SMOOTHER, PRIOR TO GALVANIZING.

④ ADHESIVE ANCHORAGE WITH ⅝" DIA. ANCHOR ROD IN ACCORDANCE WITH SPEC. 3385, TYPE A WITH HEX NUT AND WASHER. PROVIDE AN ADHESIVE WITH A MINIMUM CHARACTERISTIC BOND STRENGTH IN UNCRACKED CONCRETE OF 1.5 KSI. EMBED THE ANCHORAGE NO LESS THAN 8" REGARDLESS OF CHARACTERISTIC BOND STRENGTH. DRILL THROUGH REINFORCEMENT (IF ENCOUNTERED) TO ACHIEVE MINIMUM EMBEDMENT. ENSURE HEX NUT IS IN CONTACT WITH THE ADJACENT SURFACE AND TORQUE TO 60 FT-LBS UNLESS A HIGHER TORQUE IS RECOMMENDED BY THE MANUFACTURER. PROOF LOAD TO 8.8 KIPS. SEE SPECIAL PROVISIONS FOR ADDITIONAL REQUIREMENTS.

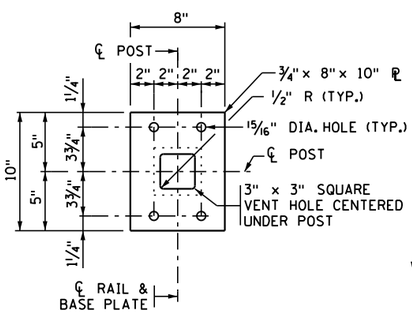

BASE PLATE

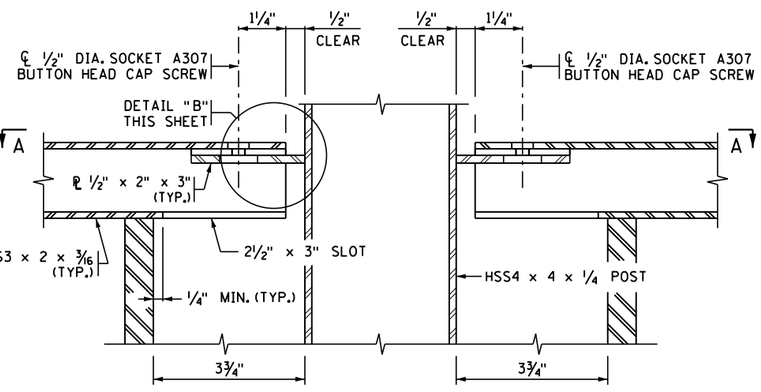

DETAIL "C"

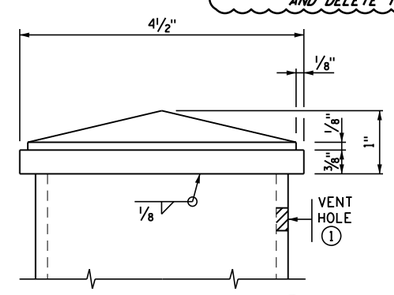

RAILPOST CAP DETAIL ③

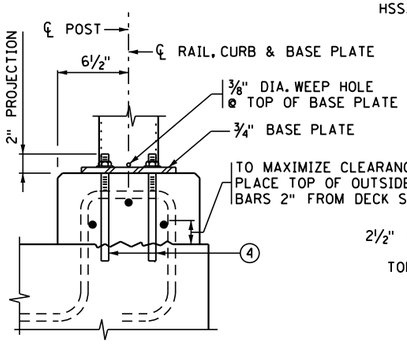

ANCHOR DETAIL

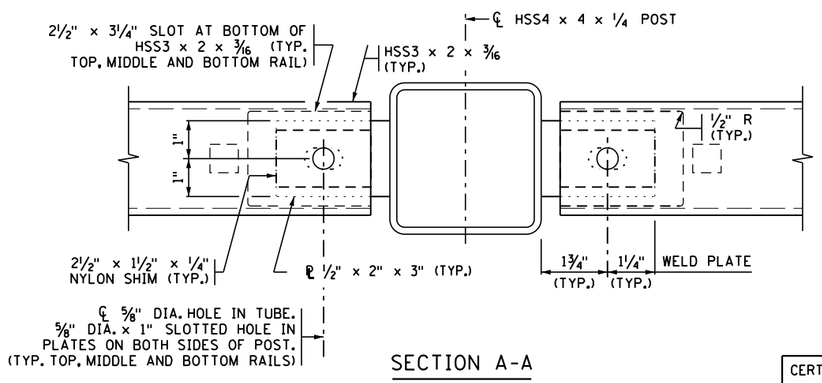

SECTION A-A

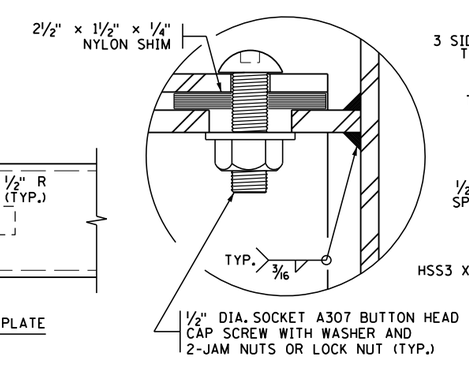

DETAIL "B"

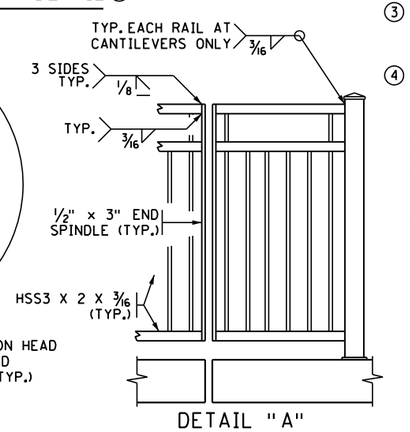

DETAIL "A"

REVISION: OCTOBER 22, 2019

APPROVED: NOVEMBER 6, 2013

Nancy Daubenberger
STATE BRIDGE ENGINEER

CERTIFIED BY _____ LICENSED PROFESSIONAL ENGINEER _____ DATE

NAME: LIC. NO.

TITLE: ORNAMENTAL METAL RAILING (DESIGN T-4 CURB MOUNT)

DES:	DR:	APPROVED:	FIG. 5-397.163
CHK:	CHK:		BRIDGE NO.
SHEET NO. OF SHEETS			

DESIGNER NOTE:
CHOOSE ONE JOINT OPENING NOTE AND DELETE OTHER. MAX. 4".

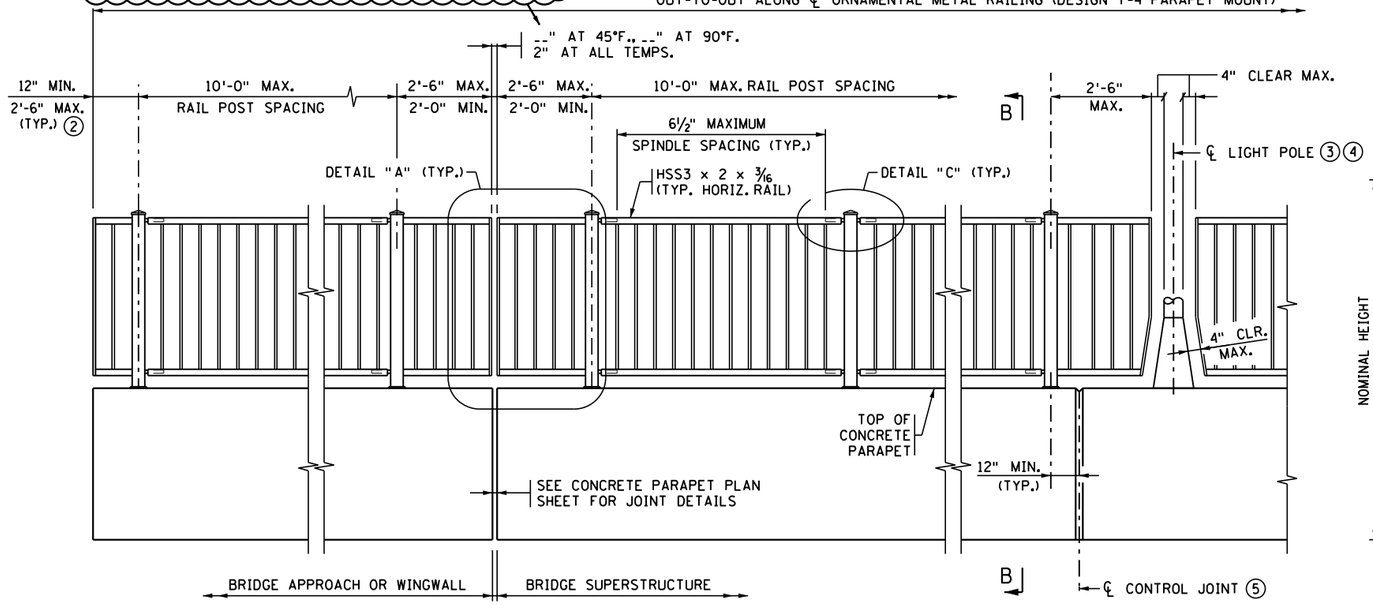

INSIDE ELEVATION OF RAILING

RAILING HEIGHT TABLE		
NOMINAL HEIGHT	Ⓐ	Ⓑ
4'-6"	1'-10"	1'-2"
6'-0"	3'-4"	2'-8"
8'-0"	5'-4"	4'-8"
10'-0"	7'-4"	6'-8"

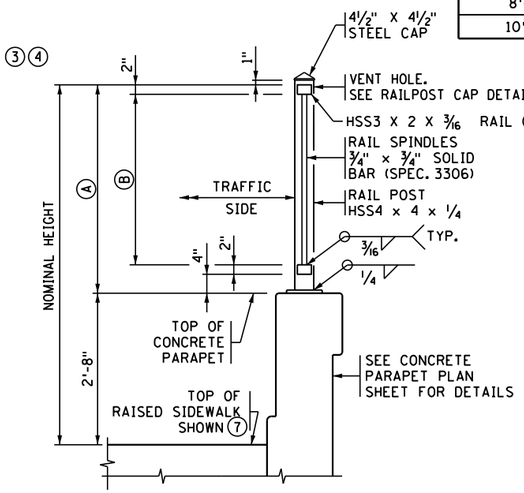

SECTION B-B
(6'-0" TALL OPTION SHOWN)

DESIGNER NOTE
(REMOVE PRIOR TO PLOTTING FINAL PLAN):
FOR ROADWAY DESIGN SPEEDS GREATER THAN 45 MPH T-5 ORNAMENTAL RAILINGS MUST BE PROTECTED BY A TRAFFIC BARRIER.
CHOOSE ONE HEIGHT FROM RAILING HEIGHT TABLE AND CROSS OUT OTHER HEIGHTS. RAIL HEIGHTS GREATER THAN SHOWN REQUIRE SPECIAL DESIGN.

GENERAL NOTES

CONTINUOUSLY GROUND ALL METAL RAILINGS; SEE THE SPECIAL PROVISIONS. REFER TO THE ELECTRICAL PLANS AND ELECTRICAL SPECIAL PROVISIONS FOR DETAILS REGARDING BONDING MULTIPLE ELECTRICAL GROUNDING SYSTEMS.

PAYMENT LENGTH SHALL BE MEASURED AS THE OUT TO OUT LENGTH ALONG THE CENTERLINE OF THE RAILING BETWEEN THE OUTSIDE ENDS, WITH DEDUCTIONS FOR THE LENGTH OF CONCRETE POSTS, IF PRESENT.

PROVIDE A500, GRADE B STRUCTURAL STEEL TUBING (HSS) IN THE RAIL CONFORMING TO SPEC. 3361. PROVIDE ALL OTHER STEEL IN ACCORDANCE WITH SPEC. 3306.

GALVANIZE BOLTS, NUTS, WASHERS AND ANCHORS IN ACCORDANCE WITH SPEC. 3392. GALVANIZE ALL OTHER STRUCTURAL STEEL IN ACCORDANCE WITH SPEC. 3394, AFTER FABRICATION.

SEE SPECIAL PROVISIONS FOR COATING TO BE APPPLIED TO METAL RAILING.

INSTALL RAIL POSTS AND SPINDLES *[NORMAL TO GRADE OR PLUMB.]*

DESIGNER NOTE
(REMOVE PRIOR TO PLOTTING FINAL PLAN):
DESIGNER SHALL CONSULT WITH BRIDGE OFFICE ARCHITECTURAL SPECIALIST TO CHOOSE ONE OPTION (NORMAL OR PLUMB) AND DELETE THE OTHER.

CURVE HORIZONTAL RAILS WHERE APPLICABLE AND PLACE RAILS PARALLEL TO THE EDGE OF SIDEWALK PROFILE.

SEE SPECIAL PROVISIONS FOR REQUIREMENTS NOT INCLUDED ON THIS SHEET.

DRILL ½" DIA. MAX. VENT HOLES ON THE UNDERSIDE OF RAIL TUBES AS NECESSARY TO FACILITATE GALVANIZING.

① DRILL VENT HOLE IN THE RAIL POST WITHIN 2" OF THE UNDERSIDE OF THE CAP, ON THE NON-TRAFFIC SIDE OF THE POST AS NECESSARY TO FACILITATE GALVANIZING. MAXIMUM HOLE SIZE IS ½" DIA.

② PLACE ℄ OF END POST 12" FROM END OF CONCRETE PARAPET IF GUARDRAIL CONNECTION PLATE IS PRESENT.

③ IF LIGHT POLE IS MOUNTED ON BLISTER, RAILING MAY BE CONTINUOUS IN FRONT OF LIGHT POLE (SEE PARAPET & LIGHT POLE DETAILS).

④ CONTRACTOR TO COORDINATE LIGHT POLE DETAILS WITH THE RAILING FABRICATOR TO ENSURE PROPER CLEARANCES AND RAILING CONFIGURATION ADJACENT TO THE POLE.

⑤ SEE SUPERSTRUCTURE AND CONCRETE PARAPET PLAN SHEETS FOR CONTROL JOINT SPACING AND DETAILS.

⑥ PROVIDE A PYRAMID TOP STYLE STEEL CAP WELDED TO TOP OF POST WITH A SURFACE FINISH OF 1000 MICRO-INCH, OR SMOOTHER, PRIOR TO GALVANIZING.

⑦ FOR NON-RAISED SIDEWALK, SEE CONCRETE PARAPET PLAN SHEET.

⑧ ADHESIVE ANCHORAGE WITH ⅝" DIA. ANCHOR ROD IN ACCORDANCE WITH SPEC. 3385, TYPE A WITH HEX NUT AND WASHER. PROVIDE AN ADHESIVE WITH A MINIMUM CHARACTERISTIC BOND STRENGTH IN UNCRACKED CONCRETE OF 1.5 KSI. EMBED THE ANCHORAGE NO LESS THAN 5" REGARDLESS OF CHARACTERISTIC BOND STRENGTH. DRILL THROUGH REINFORCEMENT (IF ENCOUNTERED) TO ACHIEVE MINIMUM EMBEDMENT. ENSURE HEX NUT IS IN CONTACT WITH THE ADJACENT SURFACE AND TORQUE TO 60 FT-LBS UNLESS A HIGHER TORQUE IS RECOMMENDED BY THE MANUFACTURER. PROOF LOAD TO 6.9 KIPS. SEE SPECIAL PROVISIONS FOR ADDITIONAL REQUIREMENTS.

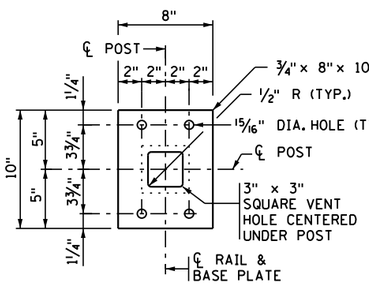

BASE PLATE

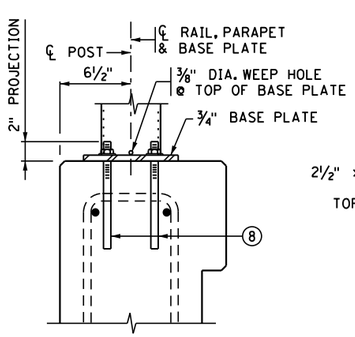

ANCHOR DETAIL

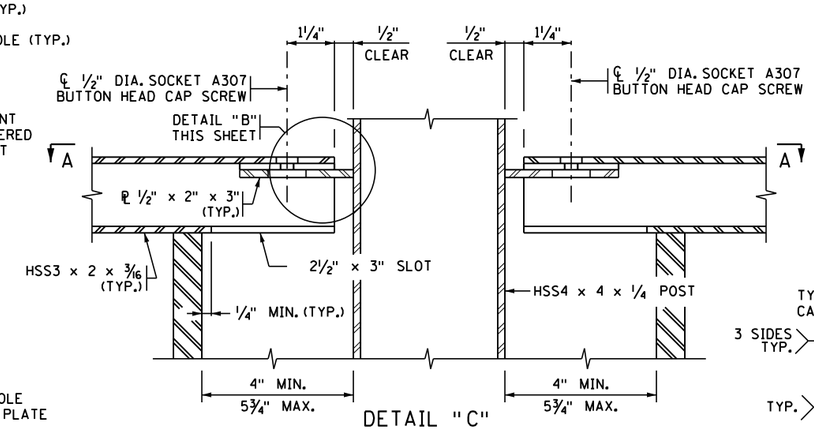

DETAIL "C"

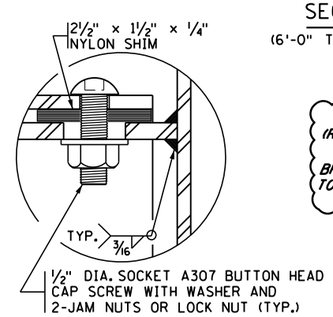

DETAIL "B"

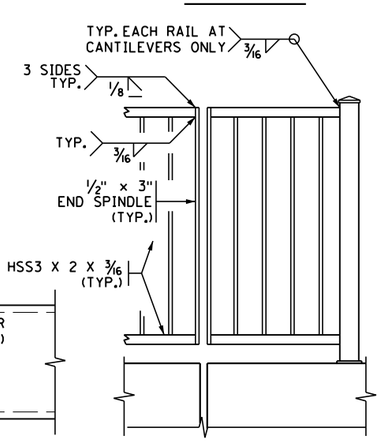

DETAIL "A"

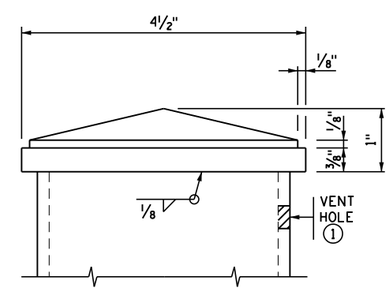

RAILPOST CAP DETAIL ⑥

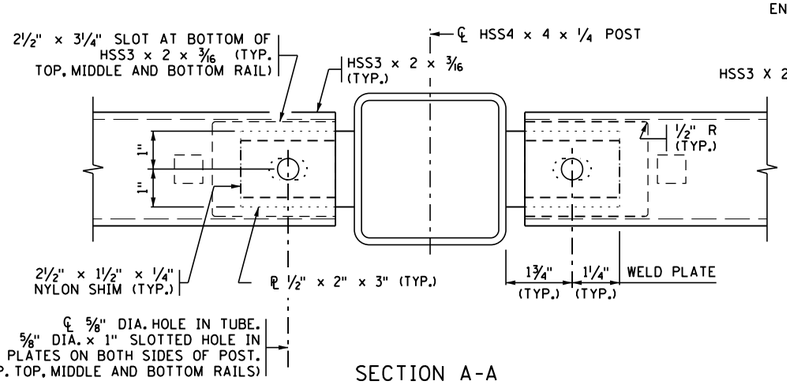

SECTION A-A

REVISION: OCTOBER 22, 2019

APPROVED: FEBRUARY 22, 2018
Kevin Western
STATE BRIDGE ENGINEER

CERTIFIED BY _____ LICENSED PROFESSIONAL ENGINEER _____ DATE
NAME: LIC. NO.

TITLE: ORNAMENTAL METAL RAILING (DESIGN T-5 PARAPET MOUNT)

DES:	DR:	APPROVED:	FIG. 5-397.164
CHK:	CHK:		BRIDGE NO.
SHEET NO. OF SHEETS			

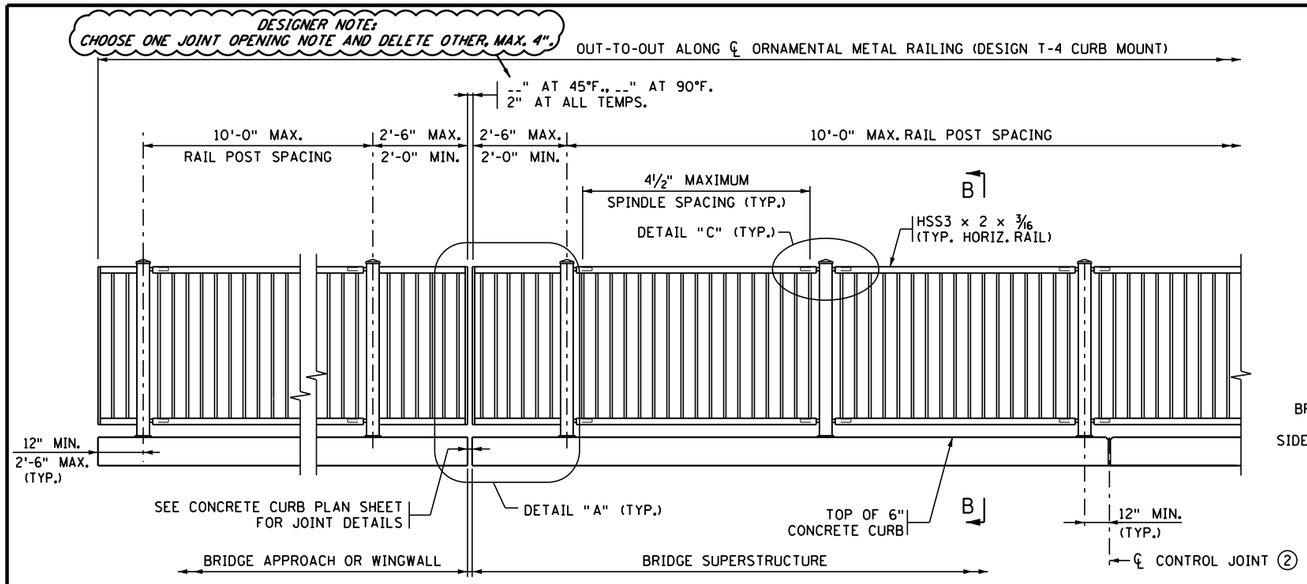

INSIDE ELEVATION OF RAILING

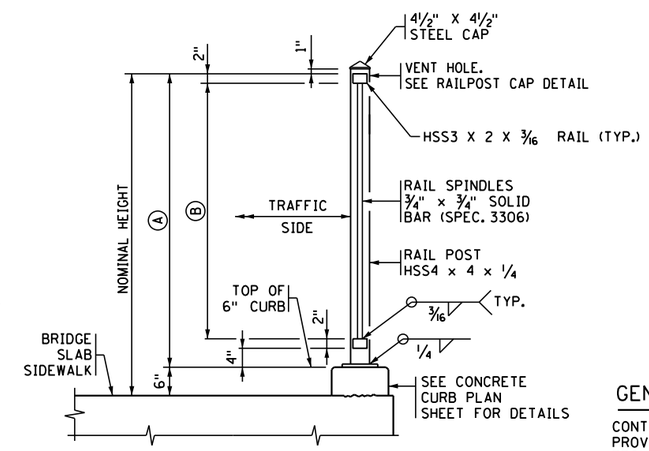

SECTION B-B

(6'-0" TALL OPTION SHOWN)

RAILING HEIGHT TABLE		
NOMINAL HEIGHT	Ⓐ	Ⓑ
4'-6"	4'-0"	3'-4"
6'-0"	5'-6"	4'-10"
8'-0"	7'-6"	6'-10"

DESIGNER NOTE
(REMOVE PRIOR TO PLOTTING FINAL PLAN):

T-5 ORNAMENTAL METAL RAILINGS MOUNTED ON A CURB MUST BE PROTECTED BY A TRAFFIC BARRIER.

CHOOSE ONE HEIGHT FROM RAILING HEIGHT TABLE AND CROSS OUT OTHER HEIGHTS. RAIL HEIGHTS GREATER THAN SHOWN REQUIRE SPECIAL DESIGN.

GENERAL NOTES

CONTINUOUSLY GROUND ALL METAL RAILINGS; SEE THE SPECIAL PROVISIONS. REFER TO THE ELECTRICAL PLANS AND ELECTRICAL SPECIAL PROVISIONS FOR DETAILS REGARDING BONDING MULTIPLE ELECTRICAL GROUNDING SYSTEMS.

PAYMENT LENGTH SHALL BE MEASURED AS THE OUT TO OUT LENGTH ALONG THE CENTERLINE OF THE RAILING BETWEEN THE OUTSIDE ENDS, WITH DEDUCTIONS FOR THE LENGTH OF CONCRETE POSTS, IF PRESENT.

PROVIDE A500, GRADE B STRUCTURAL STEEL TUBING (HSS) IN THE RAIL CONFORMING TO SPEC. 3361. PROVIDE ALL OTHER STEEL IN ACCORDANCE WITH SPEC. 3306.

GALVANIZE BOLTS, NUTS, WASHERS AND ANCHORS IN ACCORDANCE WITH SPEC. 3392. GALVANIZE ALL OTHER STRUCTURAL STEEL IN ACCORDANCE WITH SPEC. 3394, AFTER FABRICATION.

SEE SPECIAL PROVISIONS FOR COATING TO BE APPPLIED TO METAL RAILING.

INSTALL RAIL POSTS AND SPINDLES *[NORMAL TO GRADE OR PLUMB.]*

CURVE HORIZONTAL RAILS WHERE APPLICABLE AND PLACE RAILS PARALLEL TO THE EDGE OF SIDEWALK PROFILE.

SEE SPECIAL PROVISIONS FOR REQUIREMENTS NOT INCLUDED ON THIS SHEET.

DRILL ½" DIA. MAX. VENT HOLES ON THE UNDERSIDE OF RAIL TUBES AS NECESSARY TO FACILITATE GALVANIZING.

① DRILL VENT HOLE IN THE RAIL POST WITHIN 2" OF THE UNDERSIDE OF THE CAP, ON THE NON-TRAFFIC SIDE OF THE POST AS NECESSARY TO FACILITATE GALVANIZING. MAXIMUM HOLE SIZE IS ½" DIA.

② SEE CONCRETE CURB PLAN SHEET FOR CONTROL JOINT SPACING AND DETAILS.

③ PROVIDE A PYRAMID TOP STYLE STEEL CAP WELDED TO TOP OF POST WITH A SURFACE FINISH OF 1000 MICRO-INCH, OR SMOOTHER, PRIOR TO GALVANIZING.

④ ADHESIVE ANCHORAGE WITH ⅝" DIA. ANCHOR ROD IN ACCORDANCE WITH SPEC. 3385, TYPE A WITH HEX NUT AND WASHER. PROVIDE AN ADHESIVE WITH A MINIMUM CHARACTERISTIC BOND STRENGTH IN UNCRACKED CONCRETE OF 1.5 KSI. EMBED THE ANCHORAGE NO LESS THAN 8" REGARDLESS OF CHARACTERISTIC BOND STRENGTH. DRILL THROUGH REINFORCEMENT (IF ENCOUNTERED) TO ACHIEVE MINIMUM EMBEDMENT. ENSURE HEX NUT IS IN CONTACT WITH THE ADJACENT SURFACE AND TORQUE TO 60 FT-LBS UNLESS A HIGHER TORQUE IS RECOMMENDED BY THE MANUFACTURER. PROOF LOAD TO 8.8 KIPS. SEE SPECIAL PROVISIONS FOR ADDITIONAL REQUIREMENTS.

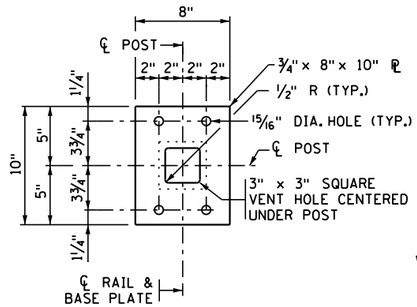

BASE PLATE

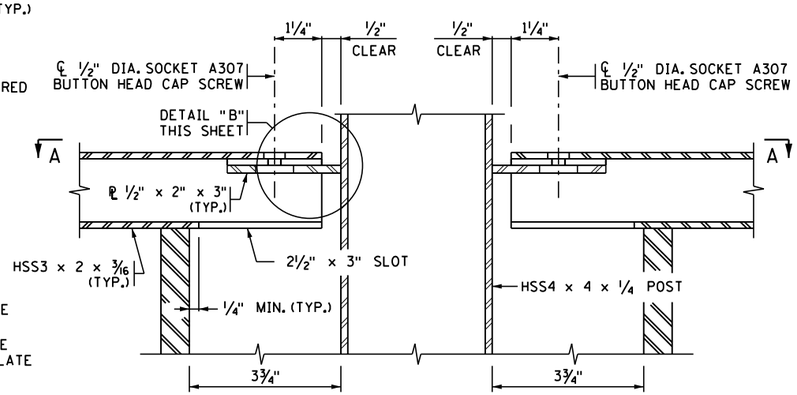

DETAIL "C"

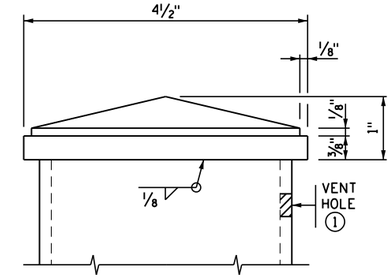

RAILPOST CAP DETAIL ③

DESIGNER NOTE
(REMOVE PRIOR TO PLOTTING FINAL PLAN):
DESIGNER SHALL CONSULT WITH BRIDGE OFFICE ARCHITECTURAL SPECIALIST TO CHOOSE ONE OPTION (NORMAL OR PLUMB) AND DELETE THE OTHER.

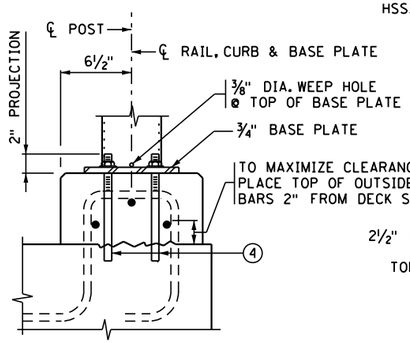

ANCHOR DETAIL

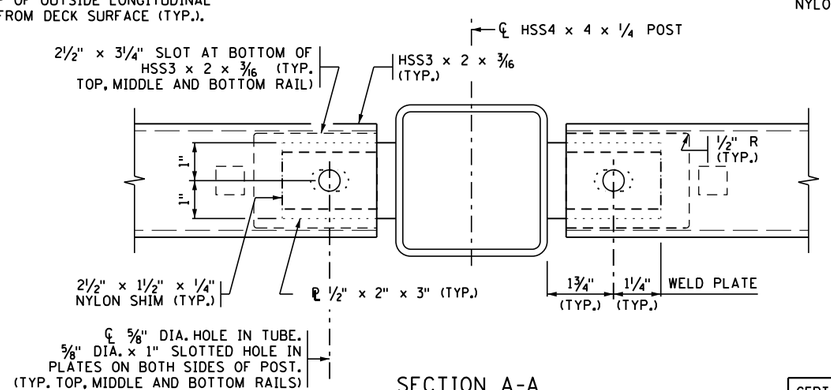

SECTION A-A

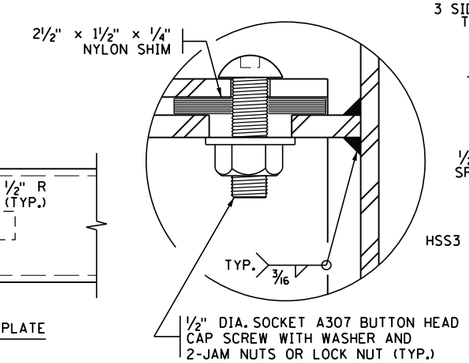

DETAIL "B"

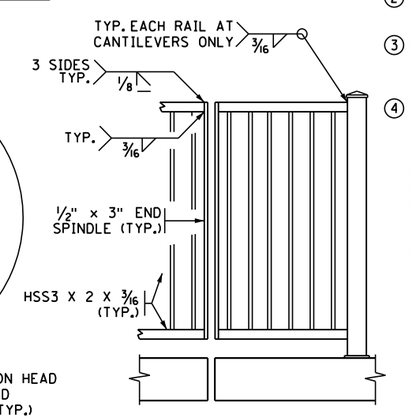

DETAIL "A"

REVISION: OCTOBER 22, 2019	CERTIFIED BY _____ LICENSED PROFESSIONAL ENGINEER DATE	TITLE: ORNAMENTAL METAL RAILING (DESIGN T-5 CURB MOUNT)	FIG. 5-397.165
APPROVED: FEBRUARY 22, 2018 Kevin Western STATE BRIDGE ENGINEER	NAME: LIC. NO.	DES: DR: CHK: CHK: SHEET NO. OF SHEETS	APPROVED: BRIDGE NO.

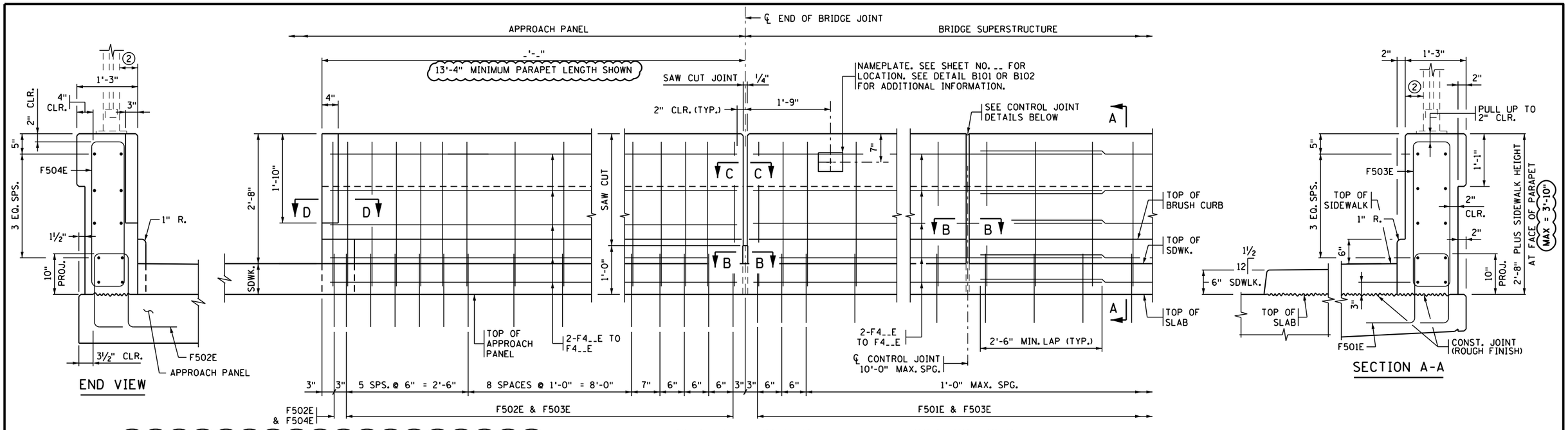

JOINT AT ABUTMENT

INSIDE ELEVATION OF PARAPET

CONTROL JOINT

PARAPET MEETS MASH TL-2 REQUIREMENTS

DESIGNER NOTES
(REMOVE PRIOR TO PRINTING FINAL PLAN):

MINIMUM PARAPET LENGTH ON APPROACH PANEL IS 13'-4" WITH MINIMUM OF 19 F502E DOWELS WITH ACCOMPANYING APPROPRIATE PARAPET VERTICAL BARS, 12" MAX. SPACING.

COORDINATE WITH ROADWAY DESIGNER TO SEE IF GUARDRAIL CONNECTION IS NEEDED. ADD DETAILS FROM STANDARD FIGURE 5-397.166(B) IF GUARDRAIL CONNECTION IS NEEDED.

IF GUARDRAIL CONNECTION IS INCLUDED, METAL RAILING OR FENCE ON TOP OF PARAPET MUST TERMINATE AT LEAST 3'-0" AWAY FROM THE END OF THE PARAPET.

MINIMUM RAISED SIDEWALK WIDTH IS 6'-0".

VERIFY THAT UTILITIES OR CONDUITS PLACED WITHIN THE PARAPET DO NOT INTERFERE WITH ANCHORAGE PLACEMENT.

X-OUT ALL DETAILS NOT BEING USED.

DESIGNER NOTES
(REMOVE PRIOR TO PRINTING FINAL PLAN):

ONLY USE THIS PARAPET WHEN THE ROADWAY DESIGN SPEED IS 45 MPH OR LESS UNLESS IT IS PROTECTED BY A TRAFFIC BARRIER.

BILL OF REINFORCEMENT FOR PARAPET

BAR	NO.	LENGTH	SHAPE	LOCATION
F501E		5'-1"		PARAPET DOWEL
F502E		5'-3"		PARAPET DOWEL
F503E				PARAPET VERTICAL
F504E				PARAPET VERTICAL
F4__E				PARAPET LONGIT.
F4__E				PARAPET LONGIT.
F4__E				PARAPET LONGIT.
F4__E				PARAPET LONGIT.
F4__E				PARAPET LONGIT.

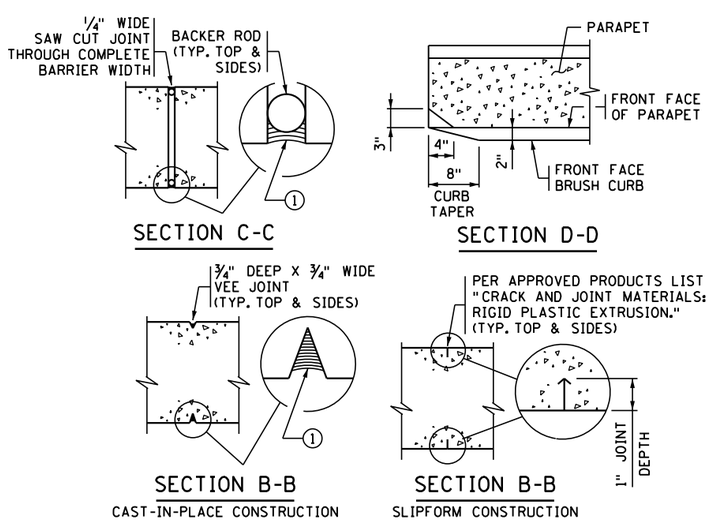

CONTROL JOINT DETAILS

FOR SLIPFORM CONSTRUCTION: IMMEDIATELY AFTER CONCRETE IS PLACED AND WHILE IT IS STILL WET, CREATE A ONE INCH STRAIGHT GROOVE USING A TROWEL. INSERT RIGID PLASTIC EXTRUSION INTO GROOVE TO A DEPTH 1/8" BELOW THE SURFACE; FINISH OVER GROOVE COMPLETELY HIDING THE EXTRUSION.

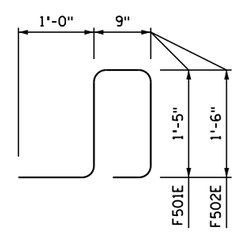

F501E, F502E

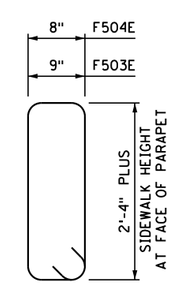

F503E, F504E

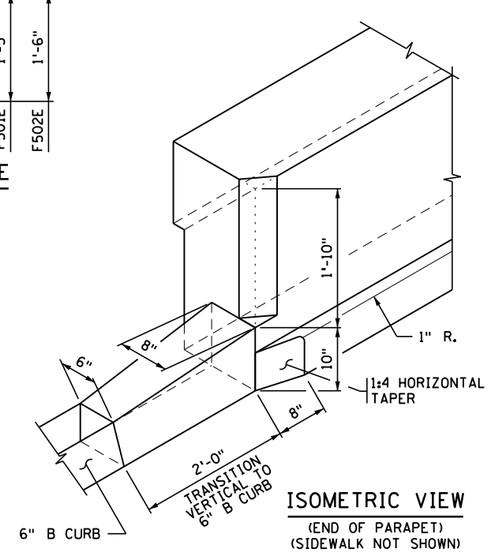

ISOMETRIC VIEW

(END OF PARAPET)
(SIDEWALK NOT SHOWN)

GENERAL NOTES

CONTINUOUSLY GROUND ALL METAL RAILINGS; SEE THE SPECIAL PROVISIONS. REFER TO THE ELECTRICAL PLANS AND ELECTRICAL SPECIAL PROVISIONS FOR DETAILS REGARDING BONDING MULTIPLE ELECTRICAL GROUNDING SYSTEMS.

FOR SLIPFORM CONSTRUCTION, TIE 100% OF THE REINFORCEMENT BAR INTERSECTIONS IN THE PARAPET.

MEASURE PAYMENT LENGTH BETWEEN THE OUTSIDE ENDS OF THE PARAPET.

CONCRETE PARAPET W/ADJACENT SIDEWALK (BASED ON A __" SIDEWALK HEIGHT) = ___ LBS./FT. (____ CU. YDS./FT.)

FINISH ALL EDGES OF PARAPET WITH 1/2" CHAMFER, EXCEPT WHERE OTHERWISE NOTED.

SPACE CONTROL JOINTS AT 10 FT. MAXIMUM. REFER TO SUPERSTRUCTURE SHEET FOR SPECIFIC SPACING INFORMATION.

NAMEPLATE TO BE CONSIDERED INCIDENTAL.

PARAPET QUANTITIES ARE LISTED IN SUMMARY OF QUANTITIES FOR SUPERSTRUCTURE.

(1) JOINT SEALANT PER MnDOT APPROVED/QUALIFIED PRODUCTS LIST - CRACK AND JOINT MATERIALS - SILICONE JOINT SEALERS.

(2) 4 1/2" MIN. FROM FRONT FACE OF PARAPET TO VERTICAL METAL RAILING POST IF NOT PROTECTED BY A TRAFFIC BARRIER.

CODE 69

FIG. 5-397.166(A)

REVISION:

APPROVED: APRIL 09, 2020
Kevin Western
STATE BRIDGE ENGINEER

CERTIFIED BY _____ LICENSED PROFESSIONAL ENGINEER _____ DATE

NAME: LIC. NO.

TITLE: CONCRETE PARAPET (TYPE P-1, TL-2)
INTEGRAL OR SEMI-INTEGRAL ABUTMENT (WITHOUT CONCRETE WEARING COURSE) WITH RAISED SIDEWALK

DES: DR: CHK: CHK:

APPROVED:

SHEET NO. OF SHEETS

BRIDGE NO.

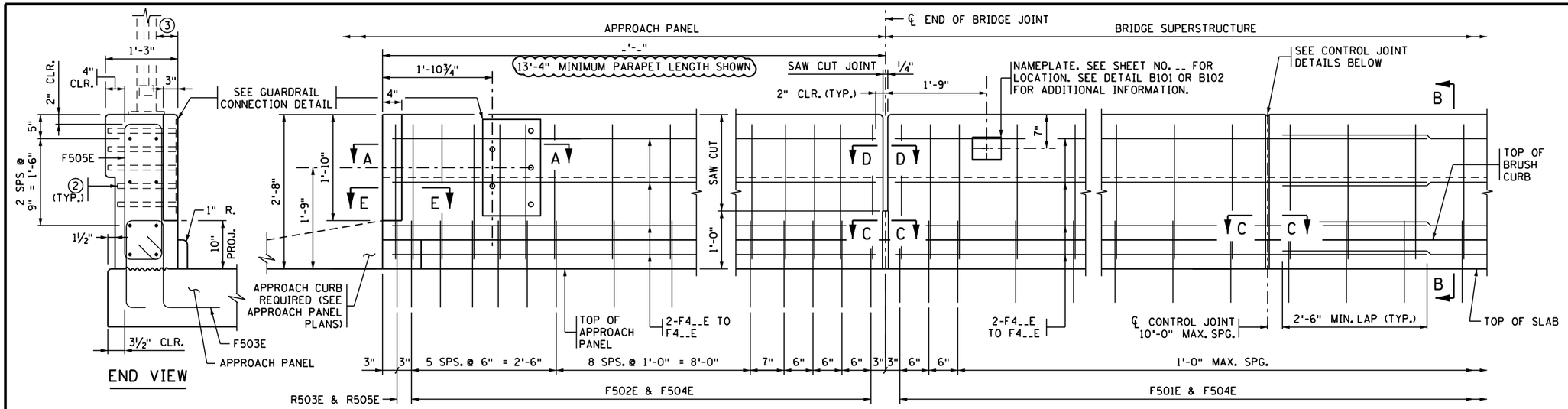

END VIEW

JOINT AT ABUTMENT

INSIDE ELEVATION OF PARAPET

CONTROL JOINT

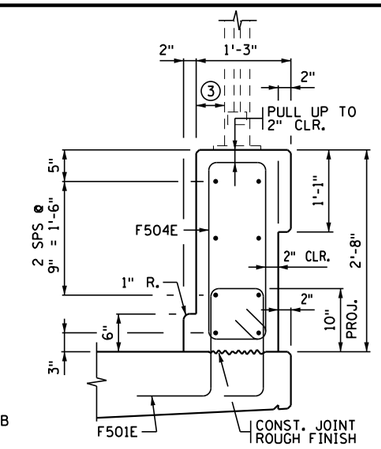

SECTION B-B

PARAPET MEETS MASH TL-2 REQUIREMENTS

DESIGNER NOTES (REMOVE PRIOR TO PRINTING FINAL PLAN):

ONLY USE THIS PARAPET WHEN THE ROADWAY DESIGN SPEED IS 45 MPH OR LESS UNLESS IT IS PROTECTED BY A TRAFFIC BARRIER.

OMIT GUARDRAIL CONNECTION IF THE PARAPET IS PROTECTED BY A TRAFFIC BARRIER THAT INCLUDES THE GUARDRAIL ATTACHMENT.

IF GUARDRAIL CONNECTION IS INCLUDED, METAL RAILING OR FENCE ON TOP OF PARAPET MUST TERMINATE AT LEAST 3'-0" AWAY FROM THE END OF THE PARAPET.

MINIMUM PARAPET LENGTH ON APPROACH PANEL IS 13'-4" WITH MINIMUM OF 19 R502E & R503E DOWELS WITH ACCOMPANYING APPROPRIATE PARAPET VERTICAL BARS, 12" MAX. SPACING.

VERIFY THAT UTILITIES OR CONDUITS PLACED WITHIN THE PARAPET DO NOT INTERFERE WITH ANCHORAGE PLACEMENT.

X-OUT ALL DETAILS NOT BEING USED.

BILL OF REINFORCEMENT FOR PARAPET				
BAR	NO.	LENGTH	SHAPE	LOCATION
F501E		5'-1"		PARAPET DOWEL
F502E		5'-3"		PARAPET DOWEL
F503E		5'-3"		PARAPET DOWEL
F504E		7'-1"		PARAPET VERTICAL
F505E		6'-11"		PARAPET VERTICAL
F4__E				PARAPET LONGIT.
F4__E				PARAPET LONGIT.
F4__E				PARAPET LONGIT.
F4__E				PARAPET LONGIT.
F4__E				PARAPET LONGIT.

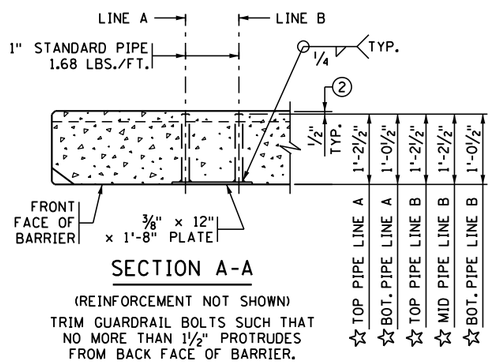

SECTION A-A

(REINFORCEMENT NOT SHOWN)

TRIM GUARDRAIL BOLTS SUCH THAT NO MORE THAN 1½" PROTRUDES FROM BACK FACE OF BARRIER.

☆ DIMENSIONS INCLUDE ⅜" PLATE

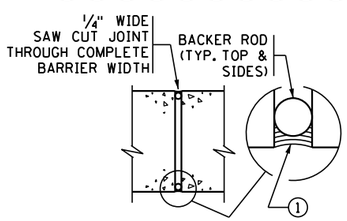

SECTION D-D

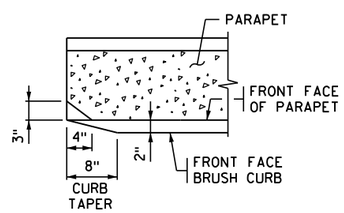

SECTION E-E

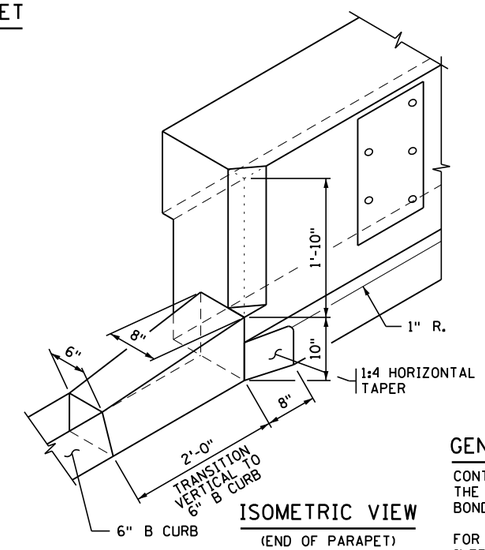

ISOMETRIC VIEW

(END OF PARAPET)

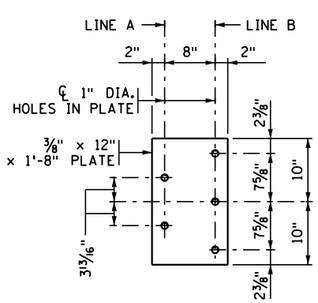

GUARDRAIL CONNECTION DETAIL

GALVANIZE AFTER FABRICATION PER SPEC. 3394
ESTIMATED WEIGHT = 34 LBS.

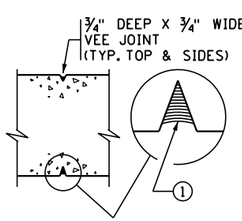

SECTION C-C

CAST-IN-PLACE CONSTRUCTION

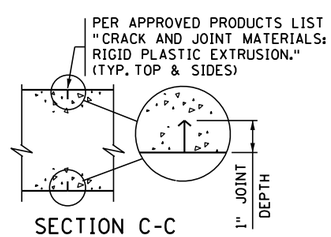

SECTION C-C

SLIPFORM CONSTRUCTION

CONTROL JOINT DETAILS

FOR SLIPFORM CONSTRUCTION: IMMEDIATELY AFTER CONCRETE IS PLACED AND WHILE IT IS STILL WET, CREATE A ONE INCH STRAIGHT GROOVE USING A TROWEL. INSERT RIGID PLASTIC EXTRUSION INTO GROOVE TO A DEPTH ⅛" BELOW THE SURFACE; FINISH OVER GROOVE COMPLETELY HIDING THE EXTRUSION.

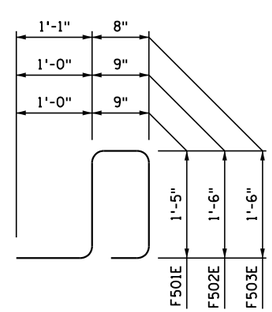

F501E, F502E, F503E

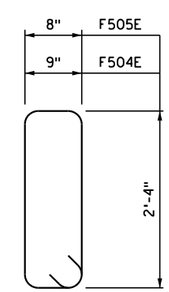

F504E, F505E

GENERAL NOTES

CONTINUOUSLY GROUND ALL METAL RAILINGS; SEE THE SPECIAL PROVISIONS. REFER TO THE ELECTRICAL PLANS AND ELECTRICAL SPECIAL PROVISIONS FOR DETAILS REGARDING BONDING MULTIPLE ELECTRICAL GROUNDING SYSTEMS.

FOR SLIPFORM CONSTRUCTION, TIE 100% OF THE REINFORCEMENT BAR INTERSECTIONS IN THE PARAPET.

MEASURE PAYMENT LENGTH BETWEEN THE OUTSIDE ENDS OF THE PARAPET.

CONCRETE PARAPET = 473 LBS./FT. (0.117 CU. YDS./FT.)

FINISH ALL EDGES OF PARAPET WITH ½" CHAMFER, EXCEPT WHERE OTHERWISE NOTED.

SPACE CONTROL JOINTS AT 10 FT. MAXIMUM. REFER TO SUPERSTRUCTURE SHEET FOR SPECIFIC SPACING INFORMATION.

GUARDRAIL CONNECTION TO BE STRUCTURAL STEEL IN ACCORDANCE WITH SPEC. 3306.

GUARDRAIL CONNECTION AND NAMEPLATE TO BE CONSIDERED INCIDENTAL.

PARAPET QUANTITIES ARE LISTED IN SUMMARY OF QUANTITIES FOR SUPERSTRUCTURE.

① JOINT SEALANT PER MnDOT APPROVED/QUALIFIED PRODUCTS LIST - CRACK AND JOINT MATERIALS - SILICONE JOINT SEALERS.

② REMOVE CONCRETE FROM PIPE ENDS AFTER SLIPFORMING OR FORM REMOVAL.

③ 4½" MIN. FROM FRONT FACE OF PARAPET TO VERTICAL METAL RAILING POST IF NOT PROTECTED BY A TRAFFIC BARRIER.

CODE 69

FIG. 5-397.166(B)

REVISION:

APPROVED: APRIL 09, 2020

Kevin Western

STATE BRIDGE ENGINEER

CERTIFIED BY _____ LICENSED PROFESSIONAL ENGINEER _____ DATE

NAME: LIC. NO.

TITLE: CONCRETE PARAPET (TYPE P-1, TL-2) INTEGRAL OR SEMI-INTEGRAL ABUTMENT (WITHOUT CONCRETE WEARING COURSE)

DES: DR: CHK: CHK:

APPROVED:

SHEET NO. OF SHEETS

BRIDGE NO.

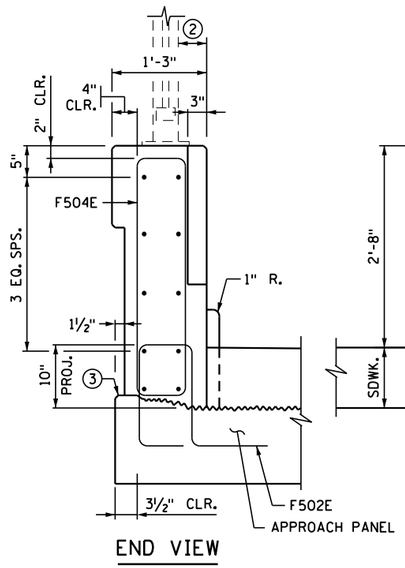

END VIEW

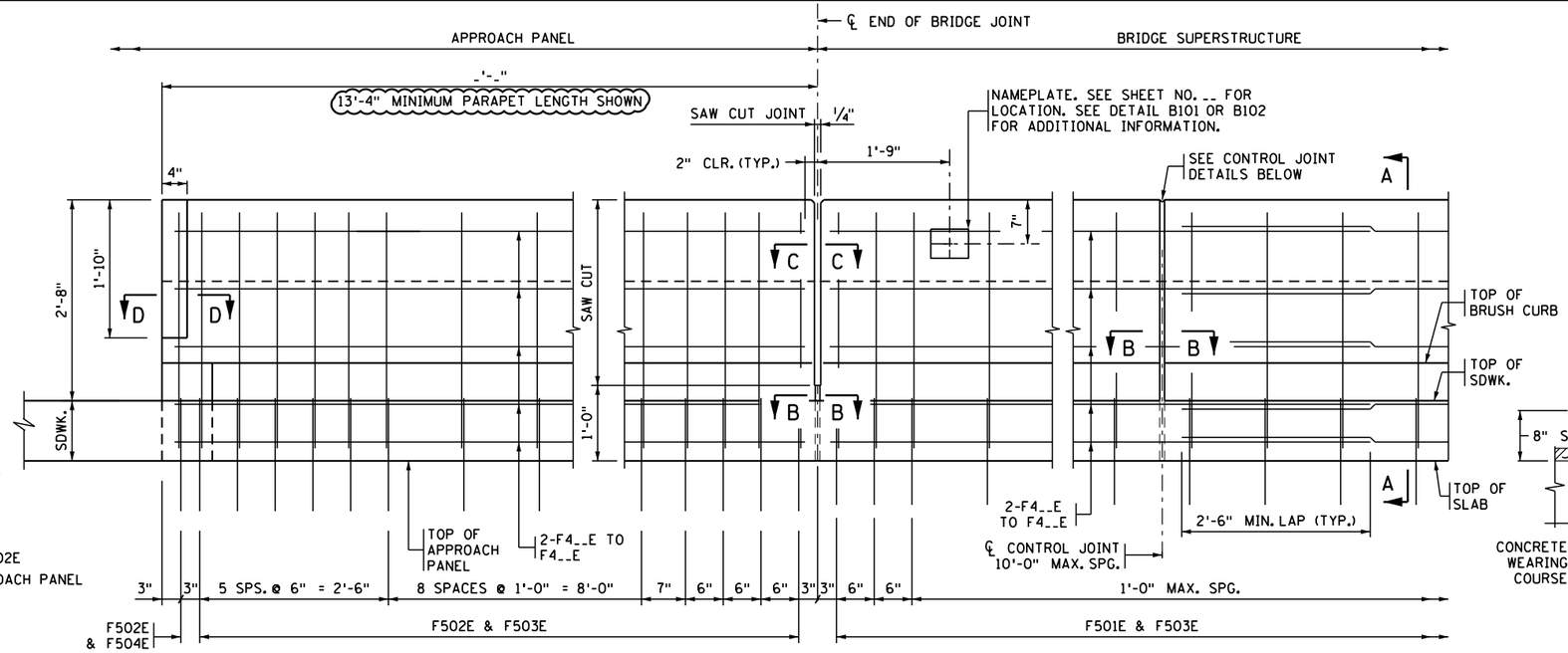

JOINT AT ABUTMENT

CONTROL JOINT

INSIDE ELEVATION OF PARAPET

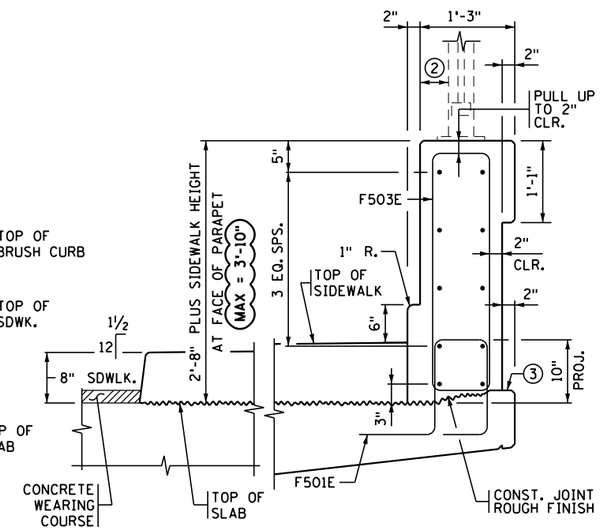

SECTION A-A

DESIGNER NOTES
(REMOVE PRIOR TO PRINTING FINAL PLAN):

MINIMUM PARAPET LENGTH ON APPROACH PANEL IS 13'-4" WITH MINIMUM OF 19 F502E DOWELS WITH ACCOMPANYING APPROPRIATE PARAPET VERTICAL BARS, 12" MAX. SPACING.

COORDINATE WITH ROADWAY DESIGNER TO SEE IF GUARDRAIL CONNECTION IS NEEDED. ADD DETAILS FROM STANDARD FIGURE 5-397.166(D) IF GUARDRAIL CONNECTION IS NEEDED.

IF GUARDRAIL CONNECTION IS INCLUDED, METAL RAILING OR FENCE ON TOP OF PARAPET MUST TERMINATE AT LEAST 3'-0" AWAY FROM THE END OF THE PARAPET.

MINIMUM RAISED SIDEWALK WIDTH IS 6'-0".

VERIFY THAT UTILITIES OR CONDUITS PLACED WITHIN THE PARAPET DO NOT INTERFERE WITH ANCHORAGE PLACEMENT.

X-OUT ALL DETAILS NOT BEING USED.

PARAPET MEETS MASH TL-2 REQUIREMENTS

DESIGNER NOTES
(REMOVE PRIOR TO PRINTING FINAL PLAN):

ONLY USE THIS PARAPET WHEN THE ROADWAY DESIGN SPEED IS 45 MPH OR LESS UNLESS IT IS PROTECTED BY A TRAFFIC BARRIER.

BILL OF REINFORCEMENT FOR PARAPET

BAR	NO.	LENGTH	SHAPE	LOCATION
F501E		4'-9"		PARAPET DOWEL
F502E		4'-11"		PARAPET DOWEL
F503E				PARAPET VERTICAL
F504E				PARAPET VERTICAL
F4__E				PARAPET LONGIT.
F4__E				PARAPET LONGIT.
F4__E				PARAPET LONGIT.
F4__E				PARAPET LONGIT.

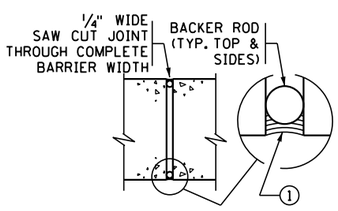

SECTION C-C

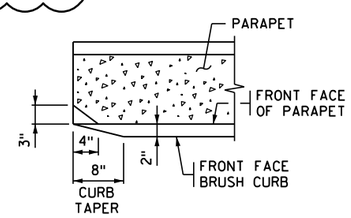

SECTION D-D

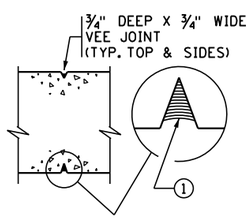

SECTION B-B

CAST-IN-PLACE CONSTRUCTION

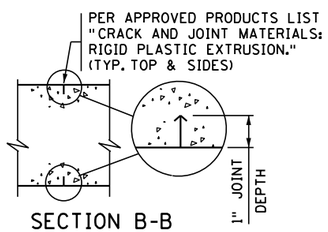

SECTION B-B

SLIPFORM CONSTRUCTION

CONTROL JOINT DETAILS

FOR SLIPFORM CONSTRUCTION: IMMEDIATELY AFTER CONCRETE IS PLACED AND WHILE IT IS STILL WET, CREATE A ONE INCH STRAIGHT GROOVE USING A TROWEL. INSERT RIGID PLASTIC EXTRUSION INTO GROOVE TO A DEPTH ⅛" BELOW THE SURFACE; FINISH OVER GROOVE COMPLETELY HIDING THE EXTRUSION.

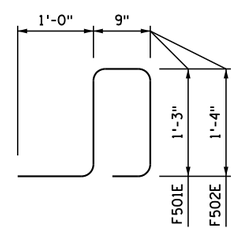

F501E, F502E

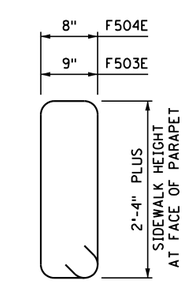

F503E, F504E

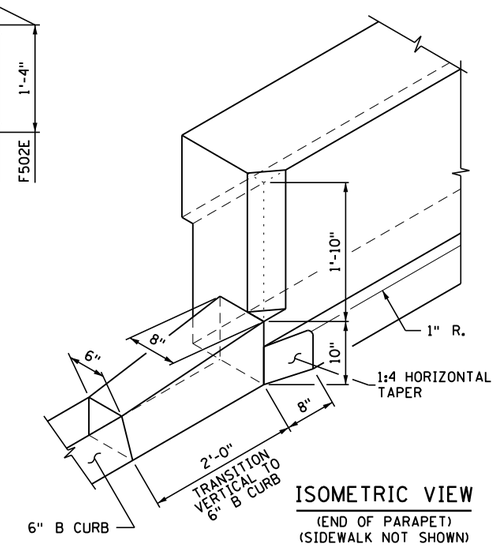

ISOMETRIC VIEW

(END OF PARAPET)
(SIDEWALK NOT SHOWN)

GENERAL NOTES

CONTINUOUSLY GROUND ALL METAL RAILINGS; SEE THE SPECIAL PROVISIONS. REFER TO THE ELECTRICAL PLANS AND ELECTRICAL SPECIAL PROVISIONS FOR DETAILS REGARDING BONDING MULTIPLE ELECTRICAL GROUNDING SYSTEMS.

FOR SLIPFORM CONSTRUCTION, TIE 100% OF THE REINFORCEMENT BAR INTERSECTIONS IN THE PARAPET.

MEASURE PAYMENT LENGTH BETWEEN THE OUTSIDE ENDS OF THE PARAPET.

CONCRETE PARAPET W/ADJACENT SIDEWALK (BASED ON A __" SIDEWALK HEIGHT) = ___ LBS./FT. (_.___ CU. YDS./FT.)

FINISH ALL EDGES OF PARAPET WITH ½" CHAMFER, EXCEPT WHERE OTHERWISE NOTED.

SPACE CONTROL JOINTS AT 10 FT. MAXIMUM. REFER TO SUPERSTRUCTURE SHEET FOR SPECIFIC SPACING INFORMATION.

NAMEPLATE TO BE CONSIDERED INCIDENTAL.

PARAPET QUANTITIES ARE LISTED IN SUMMARY OF QUANTITIES FOR SUPERSTRUCTURE.

1. JOINT SEALANT PER MnDOT APPROVED/QUALIFIED PRODUCTS LIST - CRACK AND JOINT MATERIALS - SILICONE JOINT SEALERS.
2. 4½" MIN. FROM FRONT FACE OF PARAPET TO VERTICAL METAL RAILING POST IF NOT PROTECTED BY A TRAFFIC BARRIER.
3. MATCH GUTTERLINE ELEVATION.

CODE 69

FIG. 5-397.166(C)

REVISION:

APPROVED: APRIL 09, 2020
Kevin Western
STATE BRIDGE ENGINEER

CERTIFIED BY _____ LICENSED PROFESSIONAL ENGINEER _____ DATE
NAME: LIC. NO.

TITLE: CONCRETE PARAPET (TYPE P-1, TL-2)
INTEGRAL OR SEMI-INTEGRAL ABUTMENT
(WITH 2" CONCRETE WEARING COURSE)
WITH RAISED SIDEWALK

DES: DR: CHK: CHK:

APPROVED:

BRIDGE NO.

SHEET NO. OF SHEETS

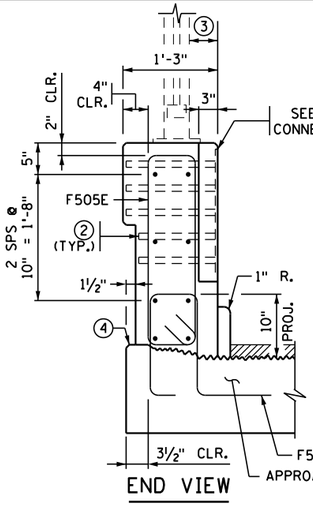

END VIEW

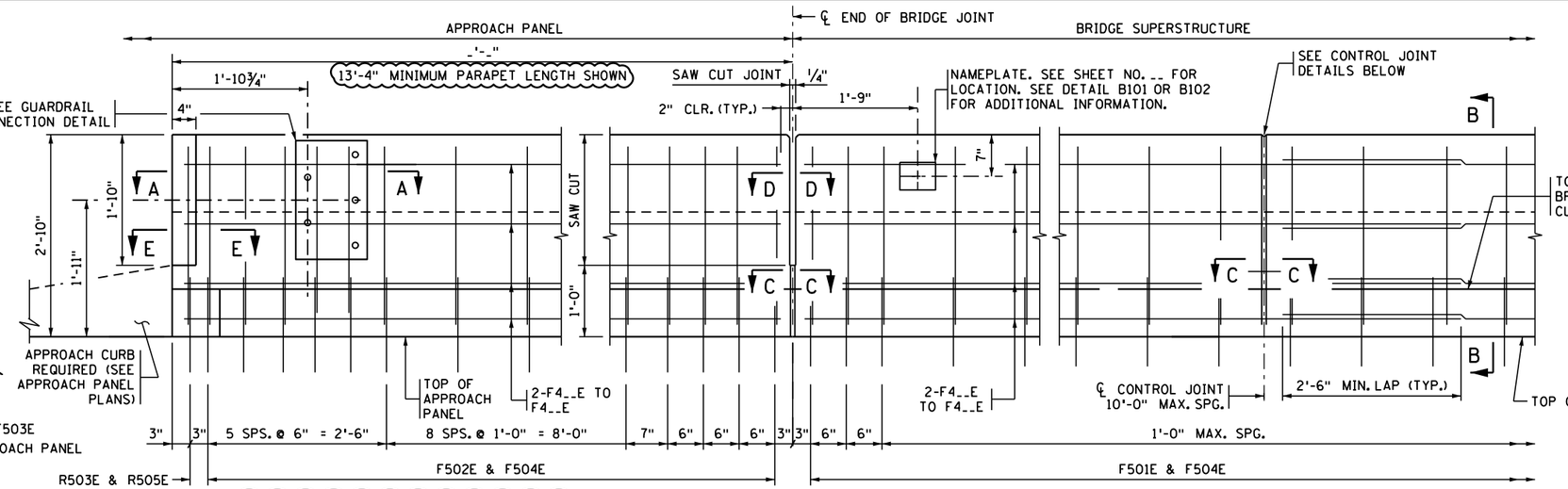

JOINT AT ABUTMENT

INSIDE ELEVATION OF PARAPET

PARAPET MEETS MASH TL-2 REQUIREMENTS

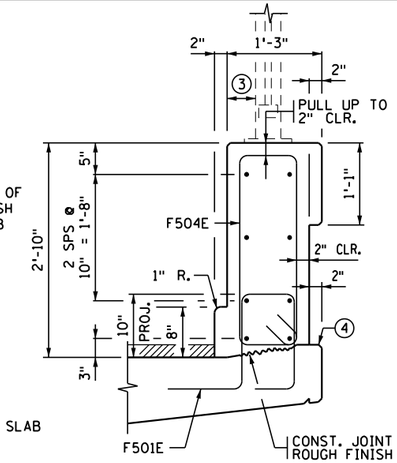

SECTION B-B

CONTROL JOINT

DESIGNER NOTES
(REMOVE PRIOR TO PRINTING FINAL PLAN):

ONLY USE THIS PARAPET WHEN THE ROADWAY DESIGN SPEED IS 45 MPH OR LESS UNLESS IT IS PROTECTED BY A TRAFFIC BARRIER.

OMIT GUARDRAIL CONNECTION IF THE PARAPET IS PROTECTED BY A TRAFFIC BARRIER THAT INCLUDES THE GUARDRAIL ATTACHMENT.

IF GUARDRAIL CONNECTION IS INCLUDED, METAL RAILING OR FENCE ON TOP OF PARAPET MUST TERMINATE AT LEAST 3'-0" AWAY FROM THE END OF THE PARAPET.

MINIMUM PARAPET LENGTH ON APPROACH PANEL IS 13'-4" WITH MINIMUM OF 19 R502E & R503E DOWELS WITH ACCOMPANYING APPROPRIATE PARAPET VERTICAL BARS, 12" MAX. SPACING.

VERIFY THAT UTILITIES OR CONDUITS PLACED WITHIN THE PARAPET DO NOT INTERFERE WITH ANCHORAGE PLACEMENT.

X-OUT ALL DETAILS NOT BEING USED.

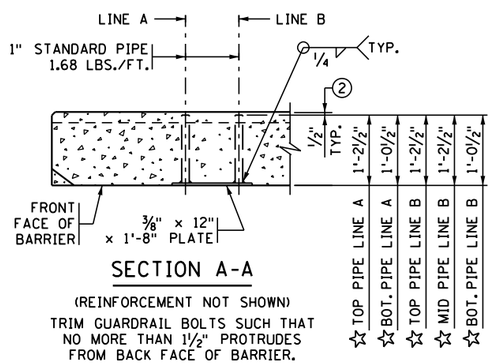

SECTION A-A

(REINFORCEMENT NOT SHOWN)

TRIM GUARDRAIL BOLTS SUCH THAT NO MORE THAN 1½" PROTRUDES FROM BACK FACE OF BARRIER.

☆ DIMENSIONS INCLUDE ⅜" PLATE

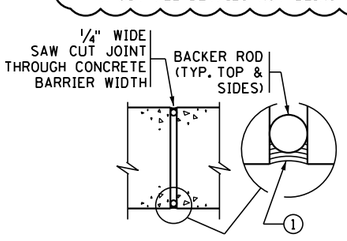

SECTION D-D

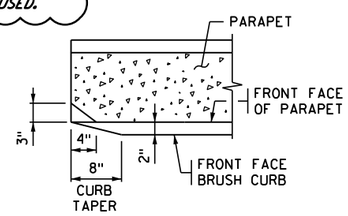

SECTION E-E

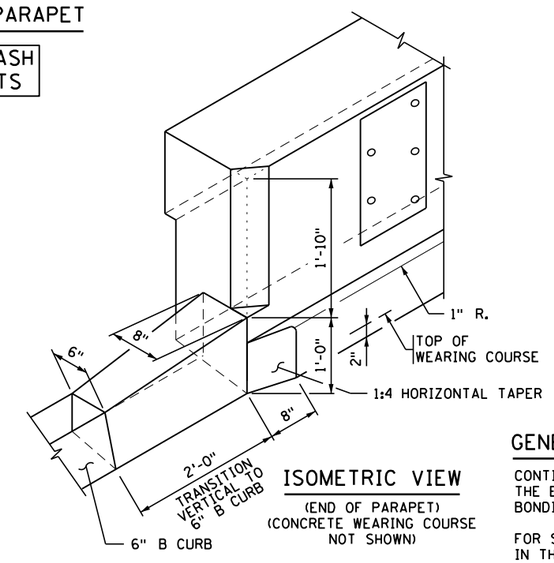

ISOMETRIC VIEW

(END OF PARAPET)
(CONCRETE WEARING COURSE NOT SHOWN)

BILL OF REINFORCEMENT FOR PARAPET				
BAR	NO.	LENGTH	SHAPE	LOCATION
F501E		4'-9"		PARAPET DOWEL
F502E		4'-11"		PARAPET DOWEL
F503E		4'-11"		PARAPET DOWEL
F504E		7'-5"		PARAPET VERTICAL
F505E		7'-3"		PARAPET VERTICAL
F4__E				PARAPET LONGIT.
F4__E				PARAPET LONGIT.
F4__E				PARAPET LONGIT.
F4__E				PARAPET LONGIT.
F4__E				PARAPET LONGIT.
F4__E				PARAPET LONGIT.

GENERAL NOTES

CONTINUOUSLY GROUND ALL METAL RAILINGS; SEE THE SPECIAL PROVISIONS. REFER TO THE ELECTRICAL PLANS AND ELECTRICAL SPECIAL PROVISIONS FOR DETAILS REGARDING BONDING MULTIPLE ELECTRICAL GROUNDING SYSTEMS.

FOR SLIPFORM CONSTRUCTION, TIE 100% OF THE REINFORCEMENT BAR INTERSECTIONS IN THE PARAPET.

MEASURE PAYMENT LENGTH BETWEEN THE OUTSIDE ENDS OF THE PARAPET.

CONCRETE PARAPET = 473 LBS./FT. (0.117 CU. YDS./FT.)

FINISH ALL EDGES OF PARAPET WITH ½" CHAMFER, EXCEPT WHERE OTHERWISE NOTED.

SPACE CONTROL JOINTS AT 10 FT. MAXIMUM. REFER TO SUPERSTRUCTURE SHEET FOR SPECIFIC SPACING INFORMATION.

GUARDRAIL CONNECTION TO BE STRUCTURAL STEEL IN ACCORDANCE WITH SPEC. 3306.

GUARDRAIL CONNECTION AND NAMEPLATE TO BE CONSIDERED INCIDENTAL.

PARAPET QUANTITIES ARE LISTED IN SUMMARY OF QUANTITIES FOR SUPERSTRUCTURE.

(1) JOINT SEALANT PER MnDOT APPROVED/QUALIFIED PRODUCTS LIST - CRACK AND JOINT MATERIALS - SILICONE JOINT SEALERS.

(2) REMOVE CONCRETE FROM PIPE ENDS AFTER SLIPFORMING OR FORM REMOVAL.

(3) 4½" MIN. FROM FRONT FACE OF PARAPET TO VERTICAL METAL RAILING POST IF NOT PROTECTED BY A TRAFFIC BARRIER.

(4) MATCH GUTTERLINE ELEVATION.

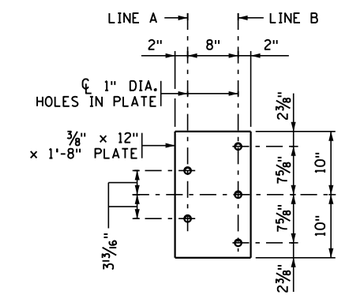

GUARDRAIL CONNECTION DETAIL

GALVANIZE AFTER FABRICATION PER SPEC. 3394
ESTIMATED WEIGHT = 34 LBS.

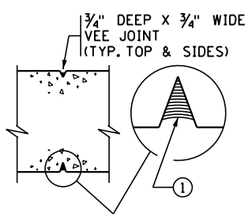

SECTION C-C

CAST-IN-PLACE CONSTRUCTION

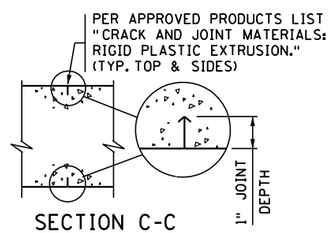

SECTION C-C

SLIPFORM CONSTRUCTION

CONTROL JOINT DETAILS

FOR SLIPFORM CONSTRUCTION: IMMEDIATELY AFTER CONCRETE IS PLACED AND WHILE IT IS STILL WET, CREATE A ONE INCH STRAIGHT GROOVE USING A TROWEL. INSERT RIGID PLASTIC EXTRUSION INTO GROOVE TO A DEPTH ⅛" BELOW THE SURFACE; FINISH OVER GROOVE COMPLETELY HIDING THE EXTRUSION.

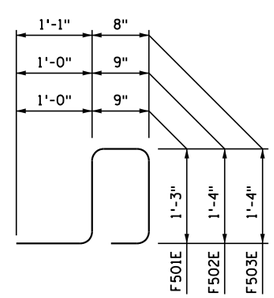

F501E, F502E, F503E

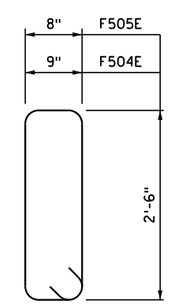

F504E, F505E

REVISION:

APPROVED: APRIL 09, 2020
Kevin Western
STATE BRIDGE ENGINEER

CODE 69

FIG. 5-397.166(D)

CERTIFIED BY _____ LICENSED PROFESSIONAL ENGINEER _____ DATE

NAME: LIC. NO.

TITLE: CONCRETE PARAPET (TYPE P-1, TL-2)
INTEGRAL OR SEMI-INTEGRAL ABUTMENT
(WITH 2" CONCRETE WEARING COURSE)

DES: DR:
CHK: CHK:

APPROVED:

BRIDGE NO.

SHEET NO. OF SHEETS

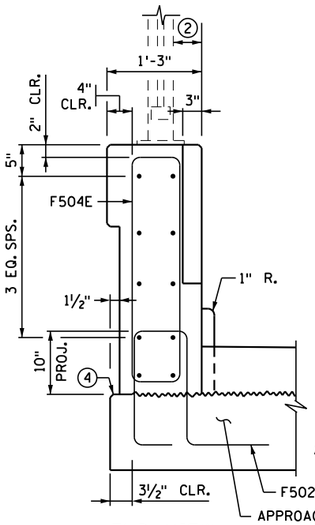

END VIEW

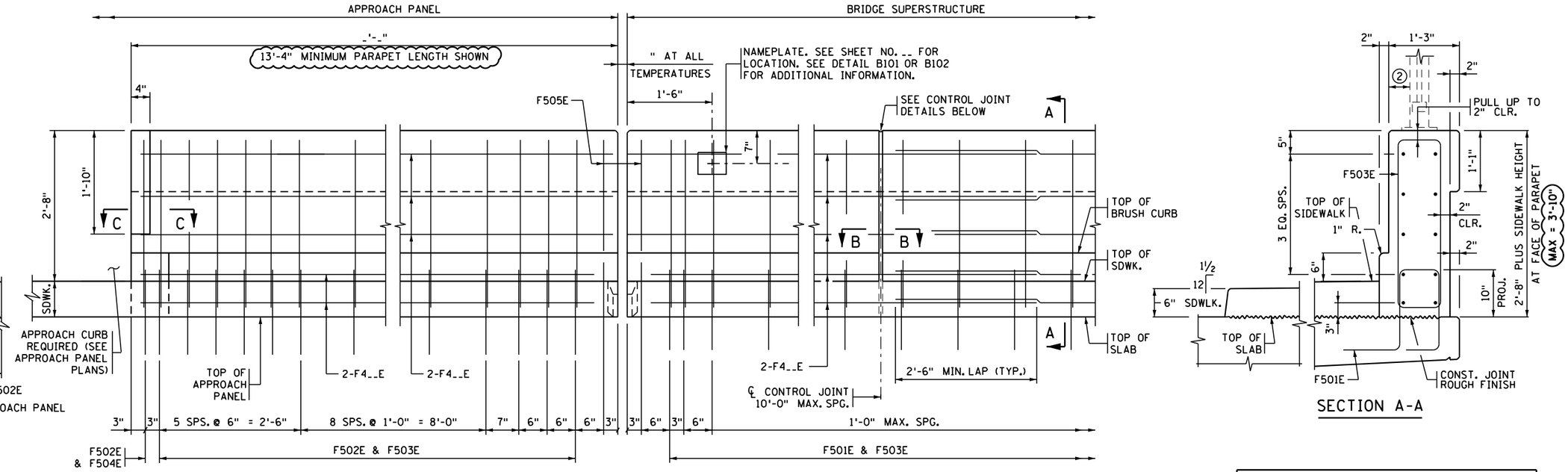

JOINT AT ABUTMENT

CONTROL JOINT

INSIDE ELEVATION OF PARAPET

PARAPET MEETS MASH TL-2 REQUIREMENTS

SECTION A-A

DESIGNER NOTES
(REMOVE PRIOR TO PRINTING FINAL PLAN):

MINIMUM PARAPET LENGTH ON APPROACH PANEL IS 13'-4" WITH MINIMUM OF 18 F502E DOWELS WITH ACCOMPANYING APPROPRIATE PARAPET VERTICAL BARS, 12" MAX. SPACING.

COORDINATE WITH ROADWAY DESIGNER TO SEE IF GUARDRAIL CONNECTION IS NEEDED. ADD DETAILS FROM STANDARD FIGURE 5-397.166(F) IF GUARDRAIL CONNECTION IS NEEDED.

IF GUARDRAIL CONNECTION IS INCLUDED, METAL RAILING OR FENCE ON TOP OF PARAPET MUST TERMINATE AT LEAST 3'-0" AWAY FROM THE END OF THE PARAPET.

MINIMUM RAISED SIDEWALK WIDTH IS 6'-0".

VERIFY THAT UTILITIES OR CONDUITS PLACED WITHIN THE PARAPET DO NOT INTERFERE WITH ANCHORAGE PLACEMENT.

X-OUT ALL DETAILS NOT BEING USED.

DESIGNER NOTES
(REMOVE PRIOR TO PRINTING FINAL PLAN):

ONLY USE THIS PARAPET WHEN THE ROADWAY DESIGN SPEED IS 45 MPH OR LESS UNLESS IT IS PROTECTED BY A TRAFFIC BARRIER

BILL OF REINFORCEMENT FOR PARAPET

BAR	NO.	LENGTH	SHAPE	LOCATION
F501E		5'-1"		PARAPET DOWEL
F502E		5'-3"		PARAPET DOWEL
F503E				PARAPET VERTICAL
F504E				PARAPET VERTICAL
F505E				PARAPET VERTICAL
F4__E				PARAPET LONGIT.
F4__E				PARAPET LONGIT.
F4__E				PARAPET LONGIT.

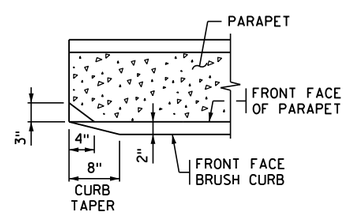

SECTION C-C

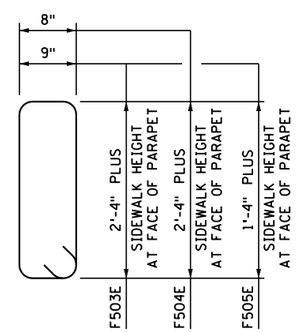

F503E, F504E, F505E

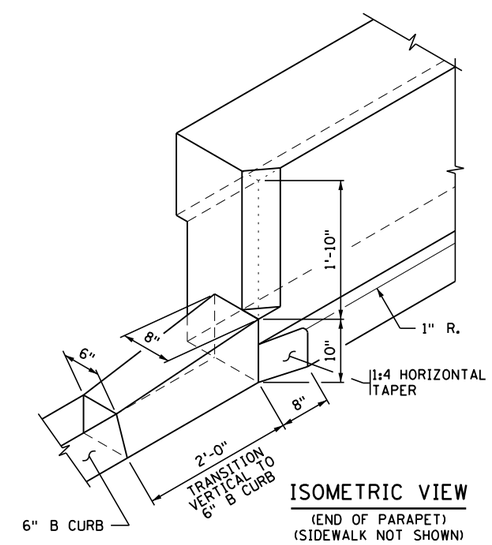

ISOMETRIC VIEW
(END OF PARAPET)
(SIDEWALK NOT SHOWN)

GENERAL NOTES

CONTINUOUSLY GROUND ALL METAL RAILINGS; SEE THE SPECIAL PROVISIONS. REFER TO THE ELECTRICAL PLANS AND ELECTRICAL SPECIAL PROVISIONS FOR DETAILS REGARDING BONDING MULTIPLE ELECTRICAL GROUNDING SYSTEMS.

FOR SLIPFORM CONSTRUCTION, TIE 100% OF THE REINFORCEMENT BAR INTERSECTIONS IN THE PARAPET.

MEASURE PAYMENT LENGTH BETWEEN THE OUTSIDE ENDS OF THE PARAPET.

CONCRETE PARAPET W/ADJACENT SIDEWALK (BASED ON A __" SIDEWALK HEIGHT) = ___ LBS./FT. (____ CU. YDS./FT.)

FINISH ALL EDGES OF PARAPET WITH ½" CHAMFER, EXCEPT WHERE OTHERWISE NOTED.

SPACE CONTROL JOINTS AT 10 FT. MAXIMUM. REFER TO SUPERSTRUCTURE SHEET FOR SPECIFIC SPACING INFORMATION.

NAMEPLATE TO BE CONSIDERED INCIDENTAL.

PARAPET QUANTITIES ARE LISTED IN SUMMARY OF QUANTITIES FOR SUPERSTRUCTURE.

(1) JOINT SEALANT PER MnDOT APPROVED/QUALIFIED PRODUCTS LIST - CRACK AND JOINT MATERIALS - SILICONE JOINT SEALERS.

(2) 4½" MIN. FROM FRONT FACE OF PARAPET TO VERTICAL METAL RAILING POST IF NOT PROTECTED BY A TRAFFIC BARRIER.

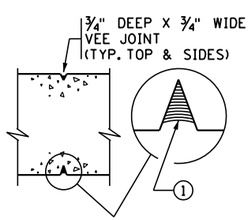

SECTION B-B
CAST-IN-PLACE CONSTRUCTION

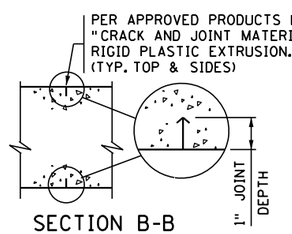

SECTION B-B
SLIPFORM CONSTRUCTION

CONTROL JOINT DETAILS

FOR SLIPFORM CONSTRUCTION: IMMEDIATELY AFTER CONCRETE IS PLACED AND WHILE IT IS STILL WET, CREATE A ONE INCH STRAIGHT GROOVE USING A TROWEL. INSERT RIGID PLASTIC EXTRUSION INTO GROOVE TO A DEPTH ⅛" BELOW THE SURFACE; FINISH OVER GROOVE COMPLETELY HIDING THE EXTRUSION.

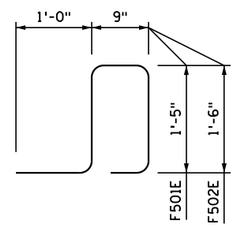

F501E, F502E

CODE 69

FIG. 5-397.166(E)

REVISION:

APPROVED: APRIL 09, 2020
Kevin Western
STATE BRIDGE ENGINEER

CERTIFIED BY _____ LICENSED PROFESSIONAL ENGINEER _____ DATE
NAME: LIC. NO.

TITLE: CONCRETE PARAPET (TYPE P-1, TL-2)
PARAPET ABUTMENT
(WITHOUT CONCRETE WEARING COURSE)
WITH RAISED SIDEWALK

DES: DR:
CHK: CHK:
APPROVED:
SHEET NO. OF SHEETS
BRIDGE NO.

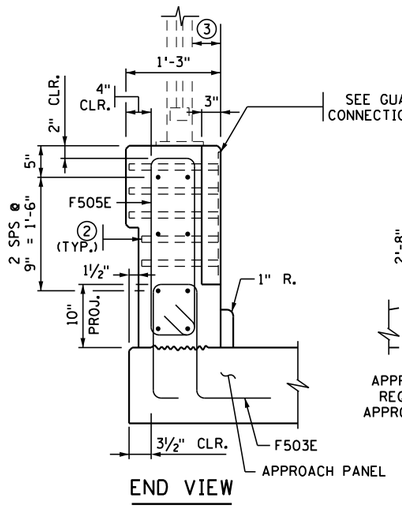

END VIEW

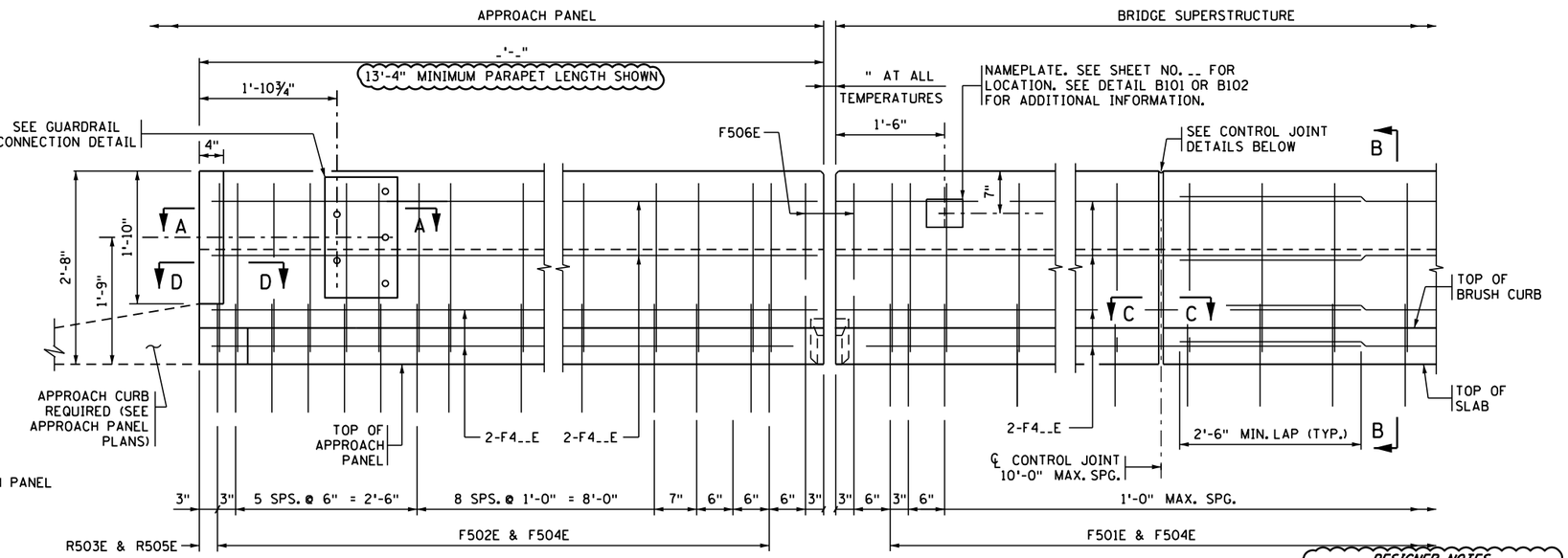

JOINT AT ABUTMENT

INSIDE ELEVATION OF PARAPET

CONTROL JOINT

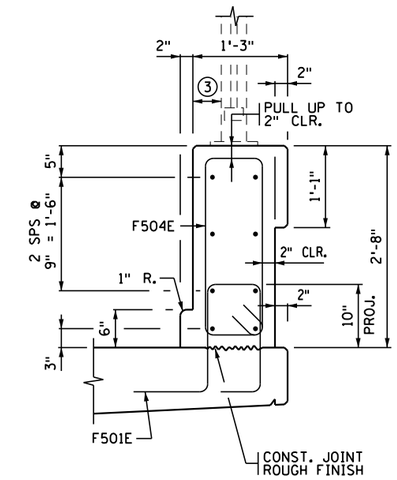

SECTION B-B

DESIGNER NOTES
(REMOVE PRIOR TO PRINTING FINAL PLAN):

OMIT GUARDRAIL CONNECTION IF THE PARAPET IS PROTECTED BY A TRAFFIC BARRIER THAT INCLUDES THE GUARDRAIL ATTACHMENT.

IF GUARDRAIL CONNECTION IS INCLUDED, METAL RAILING OR FENCE ON TOP OF PARAPET MUST TERMINATE AT LEAST 3'-0" AWAY FROM THE END OF THE PARAPET.

MINIMUM PARAPET LENGTH ON APPROACH PANEL IS 13'-4" WITH MINIMUM OF 18 R502E & R503E DOWELS WITH ACCOMPANYING APPROPRIATE PARAPET VERTICAL BARS, 12" MAX. SPACING.

VERIFY THAT UTILITIES OR CONDUITS PLACED WITHIN THE PARAPET DO NOT INTERFERE WITH ANCHORAGE PLACEMENT.

X-OUT ALL DETAILS NOT BEING USED.

PARAPET MEETS MASH TL-2 REQUIREMENTS

DESIGNER NOTES
(REMOVE PRIOR TO PRINTING FINAL PLAN):

ONLY USE THIS PARAPET WHEN THE ROADWAY DESIGN SPEED IS 45 MPH OR LESS UNLESS IT IS PROTECTED BY TRAFFIC BARRIER.

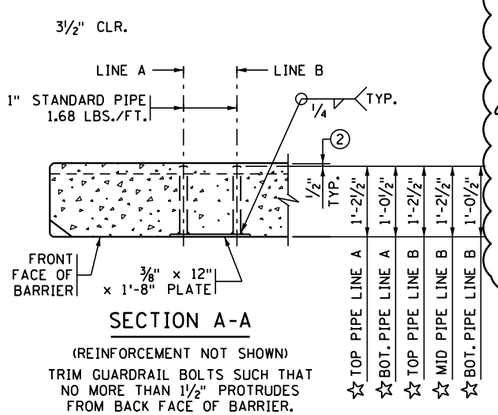

SECTION A-A

(REINFORCEMENT NOT SHOWN)

TRIM GUARDRAIL BOLTS SUCH THAT NO MORE THAN 1½" PROTRUDES FROM BACK FACE OF BARRIER.

☆ DIMENSIONS INCLUDE ⅜" PLATE

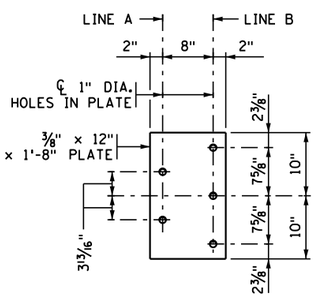

GUARDRAIL CONNECTION DETAIL

GALVANIZE AFTER FABRICATION PER SPEC. 3394
ESTIMATED WEIGHT = 34 LBS.

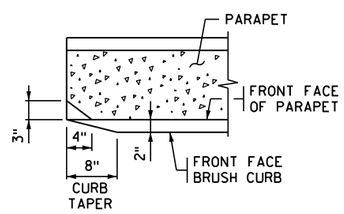

SECTION D-D

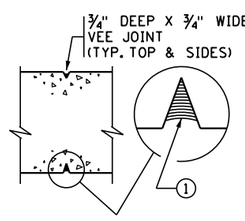

SECTION C-C

CAST-IN-PLACE CONSTRUCTION

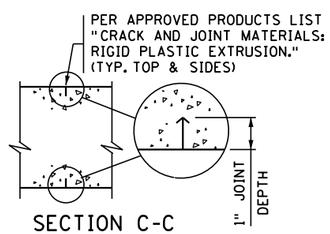

SECTION C-C

SLIPFORM CONSTRUCTION

CONTROL JOINT DETAILS

FOR SLIPFORM CONSTRUCTION: IMMEDIATELY AFTER CONCRETE IS PLACED AND WHILE IT IS STILL WET, CREATE A ONE INCH STRAIGHT GROOVE USING A TROWEL. INSERT RIGID PLASTIC EXTRUSION INTO GROOVE TO A DEPTH ⅛" BELOW THE SURFACE; FINISH OVER GROOVE COMPLETELY HIDING THE EXTRUSION.

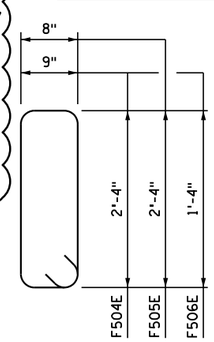

F504E, F505E, F506E

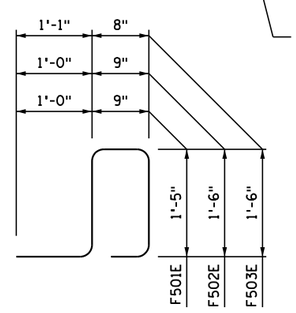

F501E, F502E, F503E

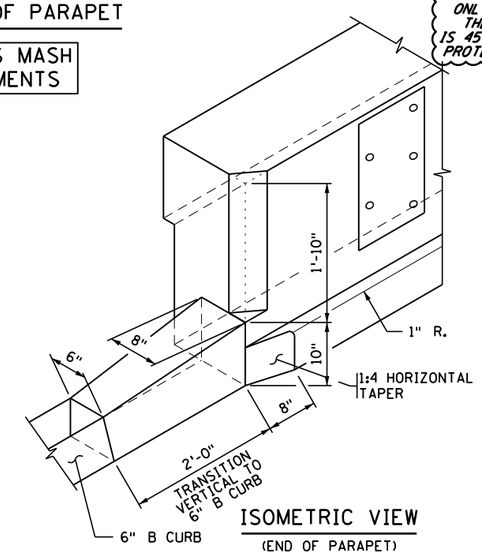

ISOMETRIC VIEW

(END OF PARAPET)

BILL OF REINFORCEMENT FOR PARAPET

BAR	NO.	LENGTH	SHAPE	LOCATION
F501E		5'-1"		PARAPET DOWEL
F502E		5'-3"		PARAPET DOWEL
F503E		5'-3"		PARAPET DOWEL
F504E		7'-1"		PARAPET VERTICAL
F505E		6'-11"		PARAPET VERTICAL
F506E		5'-1"		PARAPET VERTICAL
F4__E				PARAPET LONGIT.
F4__E				PARAPET LONGIT.
F4__E				PARAPET LONGIT.

GENERAL NOTES

CONTINUOUSLY GROUND ALL METAL RAILINGS; SEE THE SPECIAL PROVISIONS. REFER TO THE ELECTRICAL PLANS AND ELECTRICAL SPECIAL PROVISIONS FOR DETAILS REGARDING BONDING MULTIPLE ELECTRICAL GROUNDING SYSTEMS.

FOR SLIPFORM CONSTRUCTION, TIE 100% OF THE REINFORCEMENT BAR INTERSECTIONS IN THE PARAPET.

MEASURE PAYMENT LENGTH BETWEEN THE OUTSIDE ENDS OF THE PARAPET.

CONCRETE PARAPET = 473 LBS./FT. (0.117 CU. YDS./FT.)

FINISH ALL EDGES OF PARAPET WITH ½" CHAMFER, EXCEPT WHERE OTHERWISE NOTED.

SPACE CONTROL JOINTS AT 10 FT. MAXIMUM. REFER TO SUPERSTRUCTURE SHEET FOR SPECIFIC SPACING INFORMATION.

GUARDRAIL CONNECTION TO BE STRUCTURAL STEEL IN ACCORDANCE WITH SPEC. 3306.

GUARDRAIL CONNECTION AND NAMEPLATE TO BE CONSIDERED INCIDENTAL.

PARAPET QUANTITIES ARE LISTED IN SUMMARY OF QUANTITIES FOR SUPERSTRUCTURE.

1. JOINT SEALANT PER MnDOT APPROVED/QUALIFIED PRODUCTS LIST - CRACK AND JOINT MATERIALS - SILICONE JOINT SEALERS.
2. REMOVE CONCRETE FROM PIPE ENDS AFTER SLIPFORMING OR FORM REMOVAL.
3. 4½" MIN. FROM FRONT FACE OF PARAPET TO VERTICAL METAL RAILING POST IF NOT PROTECTED BY A TRAFFIC BARRIER.
4. MATCH GUTTERLINE ELEVATION.

CODE 69

FIG. 5-397.166(F)

REVISION:

APPROVED: APRIL 09, 2020

Kevin Western

STATE BRIDGE ENGINEER

CERTIFIED BY _____ LICENSED PROFESSIONAL ENGINEER _____ DATE

NAME: LIC. NO.

TITLE: CONCRETE PARAPET (TYPE P-1, TL-2)
PARAPET ABUTMENT
(WITHOUT CONCRETE WEARING COURSE)

DES: DR:
CHK: CHK:

APPROVED:

BRIDGE NO.

SHEET NO. OF SHEETS

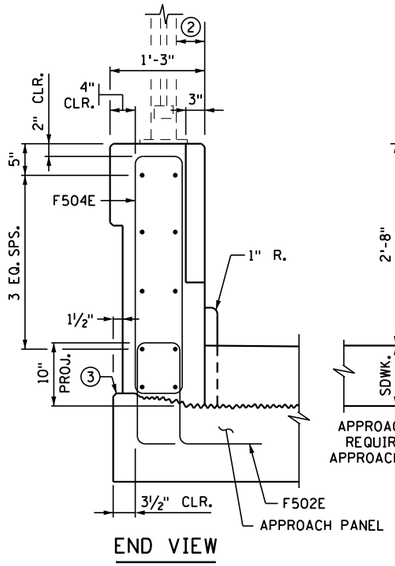

END VIEW

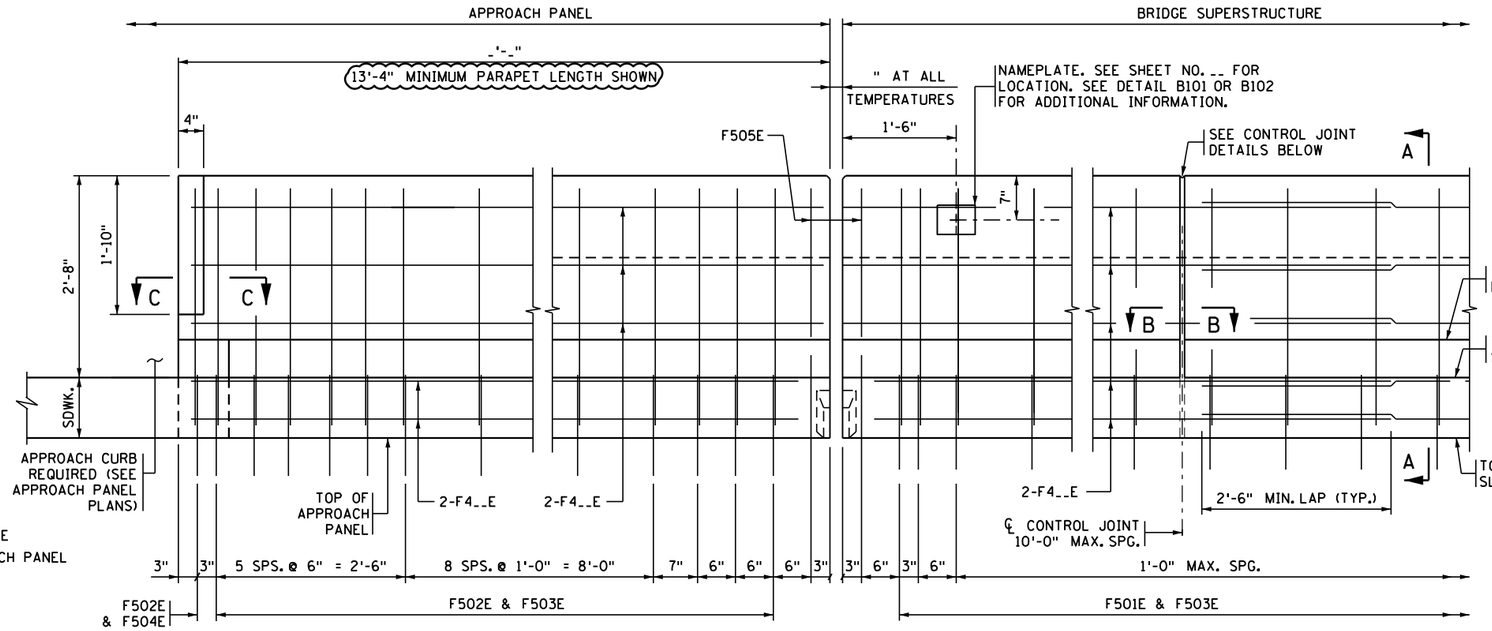

JOINT AT ABUTMENT

CONTROL JOINT

INSIDE ELEVATION OF PARAPET

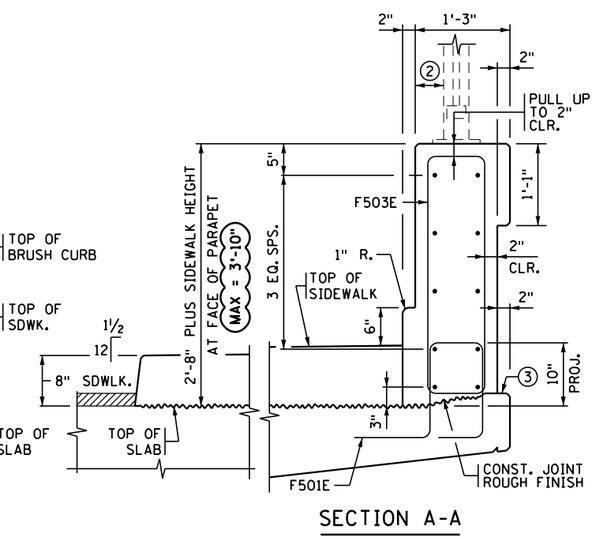

SECTION A-A

DESIGNER NOTES
(REMOVE PRIOR TO PRINTING FINAL PLAN):

MINIMUM PARAPET LENGTH ON APPROACH PANEL IS 13'-4" WITH MINIMUM OF 18 F502E DOWELS WITH ACCOMPANYING APPROPRIATE PARAPET VERTICAL BARS, 12" MAX. SPACING.

COORDINATE WITH ROADWAY DESIGNER TO SEE IF GUARDRAIL CONNECTION IS NEEDED. ADD DETAILS FROM STANDARD FIGURE 5-397.166(H) IF GUARDRAIL CONNECTION IS NEEDED.

IF GUARDRAIL CONNECTION IS INCLUDED, METAL RAILING OR FENCE ON TOP OF PARAPET MUST TERMINATE AT LEAST 3'-0" AWAY FROM THE END OF THE PARAPET.

MINIMUM RAISED SIDEWALK WIDTH IS 6'-0".

VERIFY THAT UTILITIES OR CONDUITS PLACED WITHIN THE PARAPET DO NOT INTERFERE WITH ANCHORAGE PLACEMENT.

X-OUT ALL DETAILS NOT BEING USED.

PARAPET MEETS MASH TL-2 REQUIREMENTS

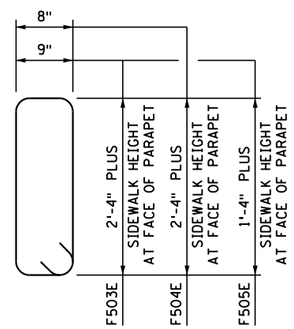

F503E, F504E, F505E

DESIGNER NOTES
(REMOVE PRIOR TO PRINTING FINAL PLAN):

ONLY USE THIS PARAPET WHEN THE ROADWAY DESIGN SPEED IS 45 MPH OR LESS UNLESS IT IS PROTECTED BY A TRAFFIC BARRIER

BILL OF REINFORCEMENT FOR PARAPET

BAR	NO.	LENGTH	SHAPE	LOCATION
F501E		4'-9"		PARAPET DOWEL
F502E		4'-11"		PARAPET DOWEL
F503E				PARAPET VERTICAL
F504E				PARAPET VERTICAL
F505E				PARAPET VERTICAL
F4__E				PARAPET LONGIT.
F4__E				PARAPET LONGIT.
F4__E				PARAPET LONGIT.

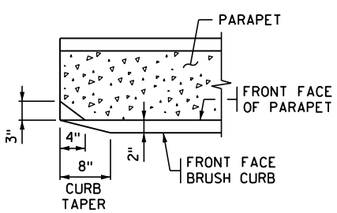

SECTION D-D

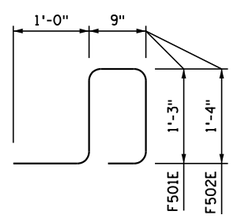

F501E, F502E

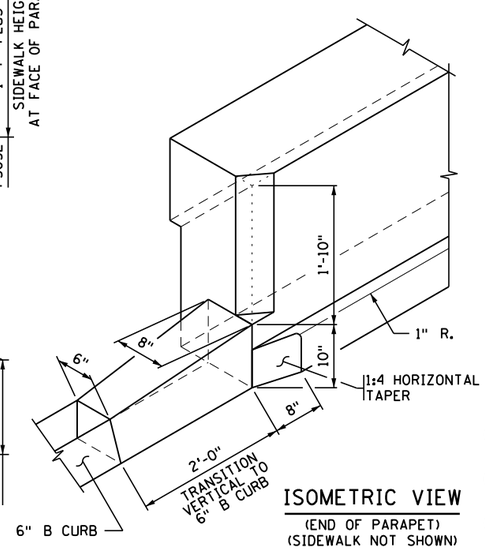

ISOMETRIC VIEW

(END OF PARAPET)
(SIDEWALK NOT SHOWN)

GENERAL NOTES

CONTINUOUSLY GROUND ALL METAL RAILINGS; SEE THE SPECIAL PROVISIONS. REFER TO THE ELECTRICAL PLANS AND ELECTRICAL SPECIAL PROVISIONS FOR DETAILS REGARDING BONDING MULTIPLE ELECTRICAL GROUNDING SYSTEMS.

FOR SLIPFORM CONSTRUCTION, TIE 100% OF THE REINFORCEMENT BAR INTERSECTIONS IN THE PARAPET.

MEASURE PAYMENT LENGTH BETWEEN THE OUTSIDE ENDS OF THE PARAPET.

CONCRETE PARAPET W/ADJACENT SIDEWALK (BASED ON A __" SIDEWALK HEIGHT) = ___ LBS./FT. (_.___ CU. YDS./FT.)

FINISH ALL EDGES OF PARAPET WITH ½" CHAMFER, EXCEPT WHERE OTHERWISE NOTED.

SPACE CONTROL JOINTS AT 10 FT. MAXIMUM. REFER TO SUPERSTRUCTURE SHEET FOR SPECIFIC SPACING INFORMATION.

NAMEPLATE TO BE CONSIDERED INCIDENTAL.

PARAPET QUANTITIES ARE LISTED IN SUMMARY OF QUANTITIES FOR SUPERSTRUCTURE.

(1) JOINT SEALANT PER MnDOT APPROVED/QUALIFIED PRODUCTS LIST - CRACK AND JOINT MATERIALS - SILICONE JOINT SEALERS.

(2) 4½" MIN. FROM FRONT FACE OF PARAPET TO VERTICAL METAL RAILING POST IF NOT PROTECTED BY A TRAFFIC BARRIER.

(3) MATCH GUTTERLINE ELEVATION.

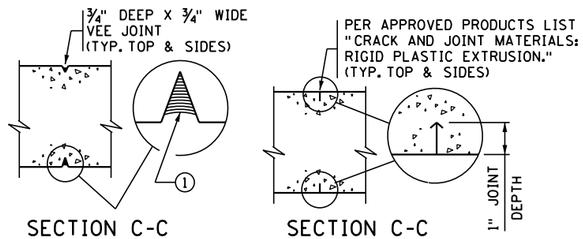

SECTION C-C
CAST-IN-PLACE CONSTRUCTION

SECTION C-C
SLIPFORM CONSTRUCTION

CONTROL JOINT DETAILS

FOR SLIPFORM CONSTRUCTION: IMMEDIATELY AFTER CONCRETE IS PLACED AND WHILE IT IS STILL WET, CREATE A ONE INCH STRAIGHT GROOVE USING A TROWEL. INSERT RIGID PLASTIC EXTRUSION INTO GROOVE TO A DEPTH ⅛" BELOW THE SURFACE; FINISH OVER GROOVE COMPLETELY HIDING THE EXTRUSION.

REVISION:

APPROVED: APRIL 09, 2020
Kevin Western
STATE BRIDGE ENGINEER

CODE 69

FIG. 5-397.166(G)

CERTIFIED BY _____ LICENSED PROFESSIONAL ENGINEER _____ DATE
NAME: LIC. NO.

TITLE: CONCRETE PARAPET (TYPE P-1, TL-2)
PARAPET ABUTMENT
(WITH 2" CONCRETE WEARING COURSE)
WITH RAISED SIDEWALK

DES: DR:
CHK: CHK:
SHEET NO. OF SHEETS

APPROVED:

BRIDGE NO.

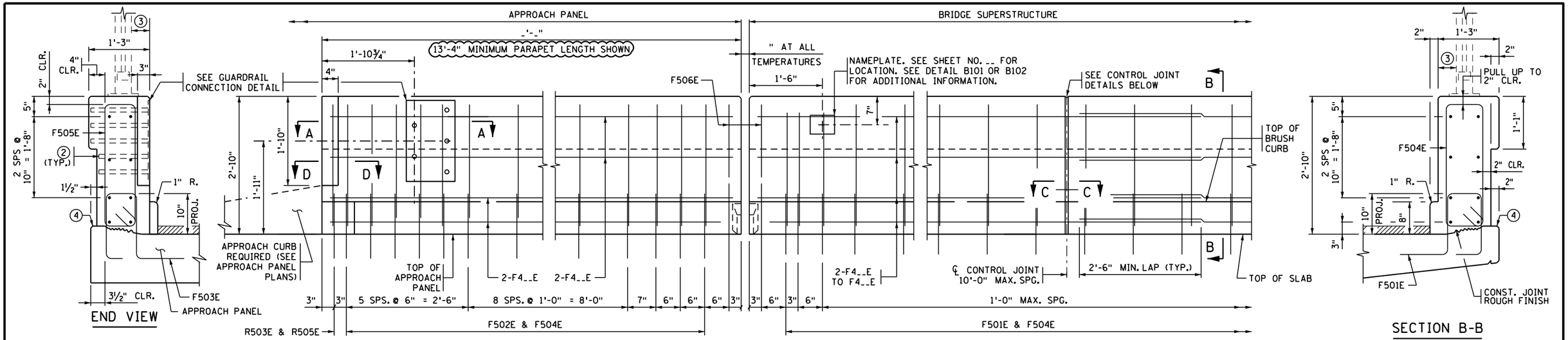

JOINT AT ABUTMENT

INSIDE ELEVATION OF PARAPET

PARAPET MEETS MASH TL-2 REQUIREMENTS

CONTROL JOINT

DESIGNER NOTES
(REMOVE PRIOR TO PRINTING FINAL PLAN):

ONLY USE THIS PARAPET WHEN THE ROADWAY DESIGN SPEED IS 45 MPH OR LESS UNLESS IT IS PROTECTED BY A TRAFFIC BARRIER.

OMIT GUARDRAIL CONNECTION IF THE PARAPET IS PROTECTED BY A TRAFFIC BARRIER THAT INCLUDES THE GUARDRAIL ATTACHMENT.

IF GUARDRAIL CONNECTION IS INCLUDED, METAL RAILING OR FENCE ON TOP OF PARAPET MUST TERMINATE AT LEAST 3'-0" AWAY FROM THE END OF THE PARAPET.

MINIMUM PARAPET LENGTH ON APPROACH PANEL IS 13'-4" WITH MINIMUM OF 18 R502E & R503E DOWELS WITH ACCOMPANYING APPROPRIATE PARAPET VERTICAL BARS, 12" MAX. SPACING.

VERIFY THAT UTILITIES OR CONDUITS PLACED WITHIN THE PARAPET DO NOT INTERFERE WITH ANCHORAGE PLACEMENT.

X-OUT ALL DETAILS NOT BEING USED.

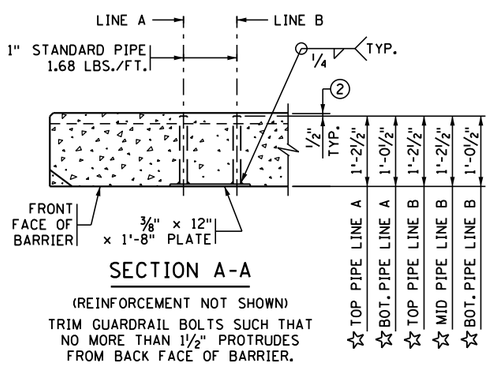

SECTION A-A

(REINFORCEMENT NOT SHOWN)

TRIM GUARDRAIL BOLTS SUCH THAT NO MORE THAN 1½" PROTRUDES FROM BACK FACE OF BARRIER.

☆ DIMENSIONS INCLUDE ⅜" PLATE

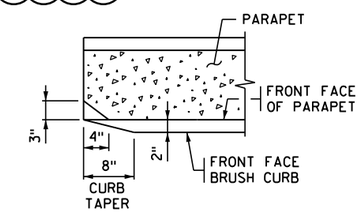

SECTION D-D

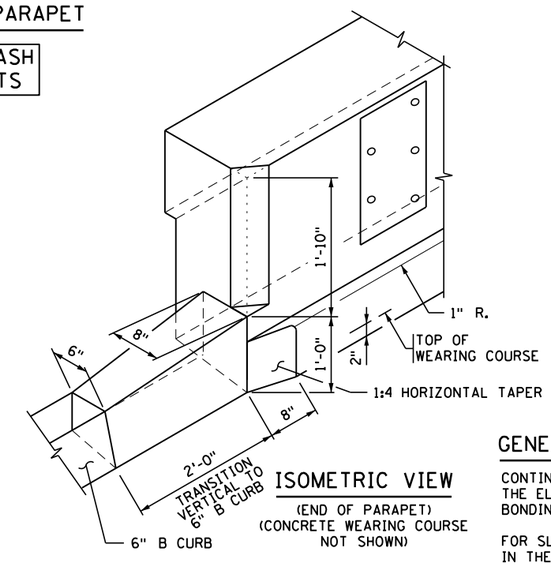

ISOMETRIC VIEW

(END OF PARAPET)
(CONCRETE WEARING COURSE NOT SHOWN)

BILL OF REINFORCEMENT FOR PARAPET				
BAR	NO.	LENGTH	SHAPE	LOCATION
F501E		4'-9"		PARAPET DOWEL
F502E		4'-11"		PARAPET DOWEL
F503E		4'-11"		PARAPET DOWEL
F504E		7'-5"		PARAPET VERTICAL
F505E		7'-3"		PARAPET VERTICAL
F4__E				PARAPET LONGIT.
F4__E				PARAPET LONGIT.
F4__E				PARAPET LONGIT.
F4__E				PARAPET LONGIT.
F4__E				PARAPET LONGIT.
F4__E				PARAPET LONGIT.

GENERAL NOTES

CONTINUOUSLY GROUND ALL METAL RAILINGS; SEE THE SPECIAL PROVISIONS. REFER TO THE ELECTRICAL PLANS AND ELECTRICAL SPECIAL PROVISIONS FOR DETAILS REGARDING BONDING MULTIPLE ELECTRICAL GROUNDING SYSTEMS.

FOR SLIPFORM CONSTRUCTION, TIE 100% OF THE REINFORCEMENT BAR INTERSECTIONS IN THE PARAPET.

MEASURE PAYMENT LENGTH BETWEEN THE OUTSIDE ENDS OF THE PARAPET.

CONCRETE PARAPET = 473 LBS./FT. (0.117 CU. YDS./FT.)

FINISH ALL EDGES OF PARAPET WITH ½" CHAMFER, EXCEPT WHERE OTHERWISE NOTED.

SPACE CONTROL JOINTS AT 10 FT. MAXIMUM. REFER TO SUPERSTRUCTURE SHEET FOR SPECIFIC SPACING INFORMATION.

GUARDRAIL CONNECTION TO BE STRUCTURAL STEEL IN ACCORDANCE WITH SPEC. 3306.

GUARDRAIL CONNECTION AND NAMEPLATE TO BE CONSIDERED INCIDENTAL.

PARAPET QUANTITIES ARE LISTED IN SUMMARY OF QUANTITIES FOR SUPERSTRUCTURE.

① JOINT SEALANT PER MnDOT APPROVED/QUALIFIED PRODUCTS LIST - CRACK AND JOINT MATERIALS - SILICONE JOINT SEALERS.

② REMOVE CONCRETE FROM PIPE ENDS AFTER SLIPFORMING OR FORM REMOVAL.

③ 4½" MIN. FROM FRONT FACE OF PARAPET TO VERTICAL METAL RAILING POST IF NOT PROTECTED BY A TRAFFIC BARRIER.

④ MATCH GUTTERLINE ELEVATION.

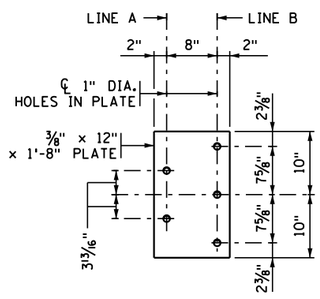

GUARDRAIL CONNECTION DETAIL

GALVANIZE AFTER FABRICATION PER SPEC. 3394
ESTIMATED WEIGHT = 34 LBS.

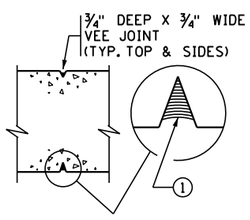

SECTION C-C

CAST-IN-PLACE CONSTRUCTION

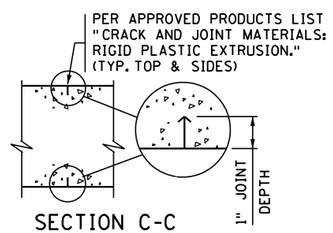

SECTION C-C

SLIPFORM CONSTRUCTION

CONTROL JOINT DETAILS

FOR SLIPFORM CONSTRUCTION: IMMEDIATELY AFTER CONCRETE IS PLACED AND WHILE IT IS STILL WET, CREATE A ONE INCH STRAIGHT GROOVE USING A TROWEL. INSERT RIGID PLASTIC EXTRUSION INTO GROOVE TO A DEPTH ⅛" BELOW THE SURFACE; FINISH OVER GROOVE COMPLETELY HIDING THE EXTRUSION.

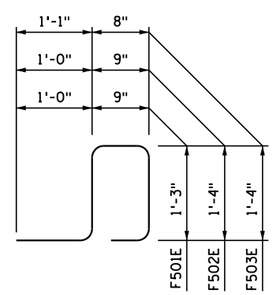

F501E, F502E, F503E

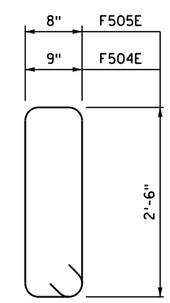

F504E, F505E

CODE 69

FIG. 5-397.166(H)

REVISION:

APPROVED: APRIL 09, 2020

Kevin Western
STATE BRIDGE ENGINEER

CERTIFIED BY _____ LICENSED PROFESSIONAL ENGINEER _____ DATE

NAME: LIC. NO.

TITLE: CONCRETE PARAPET (TYPE P-1, TL-2)
PARAPET ABUTMENT
(WITH 2" CONCRETE WEARING COURSE)

DES: DR:
CHK: CHK:

APPROVED:

BRIDGE NO.

SHEET NO. OF SHEETS

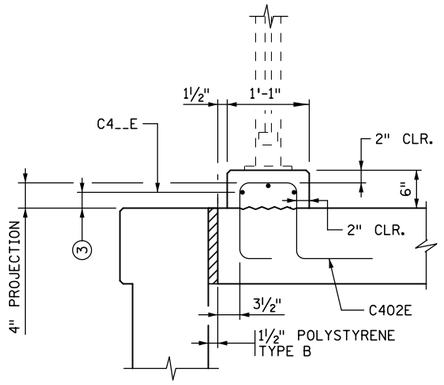

SECTION A-A

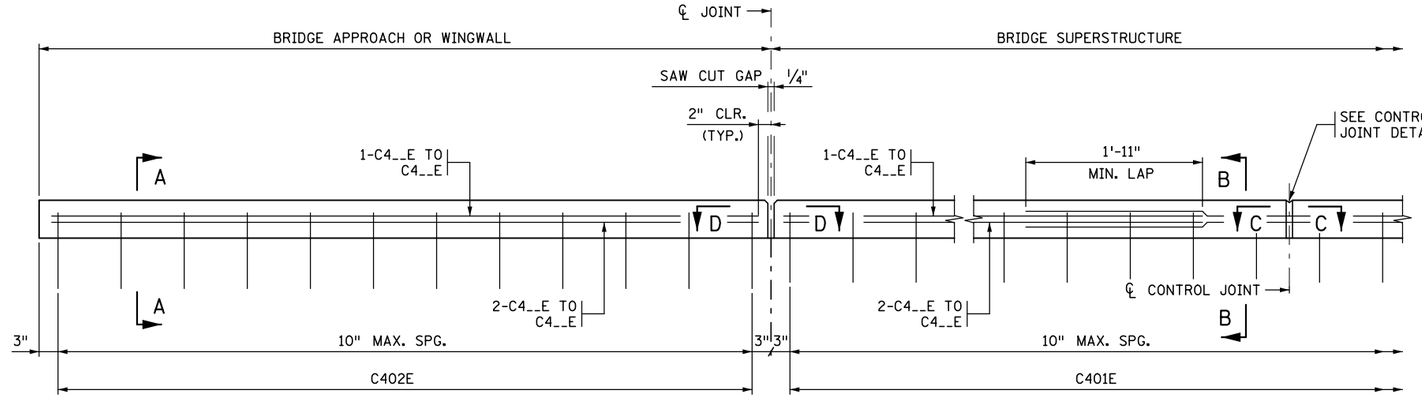

JOINT AT ABUTMENT

INTEGRAL OR SEMI-INTEGRAL ABUTMENT
(SEE ABUTMENT TYPE TABLE BELOW)

INSIDE ELEVATION OF CONCRETE CURB

CONTROL JOINT

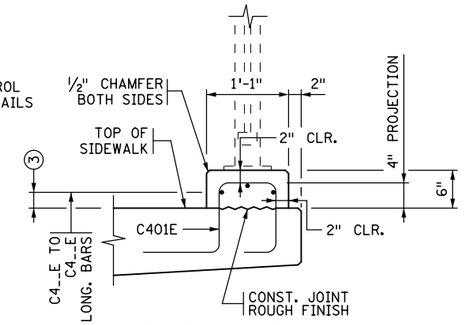

SECTION B-B

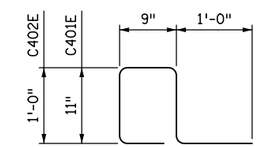

C401E, C402E

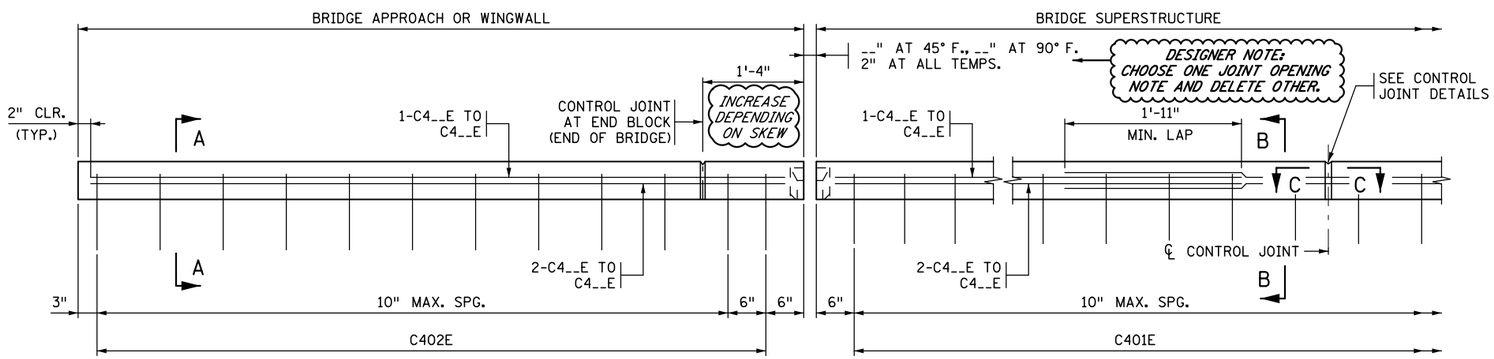

JOINT AT ABUTMENT

PARAPET ABUTMENT (SEE ABUTMENT TYPE TABLE BELOW)
(USE ONLY WITH STRIP SEAL EXPANSION DEVICE)
(EXPANSION DEVICE NOT SHOWN)

INSIDE ELEVATION OF CONCRETE CURB

CONTROL JOINT

CURB DOES NOT MEET CRASH TEST REQUIREMENTS OF NCHRP REPORT 350 OR MASH

BILL OF REINFORCEMENT FOR CURB				
BAR	NO.	LENGTH	SHAPE	LOCATION
C401E		4'-2"		CURB BASE VERTICAL
C402E		4'-4"		CURB BASE VERTICAL
C4__E				CURB BASE LONGIT.
C4__E				CURB BASE LONGIT.
C4__E				CURB BASE LONGIT.

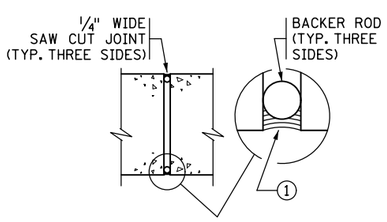

SECTION D-D

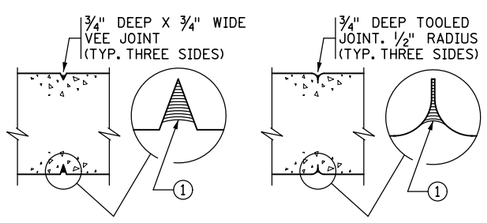

SECTION C-C
CONTRACTOR OPTION 1

SECTION C-C
CONTRACTOR OPTION 2

CONTROL JOINT DETAILS

WHEN USING SLIP FORM METHOD TO PLACE THE CONCRETE, CUT JOINT 3 INCHES DEEP USING MARGIN TROWEL OR SIMILAR MEANS IMMEDIATELY AFTER CONCRETE PLACEMENT (TYP. THREE SIDES)

DESIGNER NOTES
REMOVE PRIOR TO PLOTTING FINAL PLAN.

T-3 AND T-4 ORNAMENTAL METAL RAILINGS MOUNTED ON A CURB MUST BE PROTECTED BY A TRAFFIC BARRIER.

A SPECIAL CURB DESIGN IS REQUIRED IF SUPPORTING LIGHTING OR OTHER FIXTURES/ATTACHMENTS.

IF THE CURB CONTAINS A CONDUIT, USE CAST-IN-PLACE ANCHORAGES FOR THE RAILING ATTACHMENT.

BLOCK OUT AND CROSS HATCH ALL DETAILS NOT BEING USED.

ABUTMENT TYPE	
INTEGRAL OR SEMI-INTEGRAL ABUTMENT	☐
PARAPET ABUTMENT	☐

DESIGNER NOTE: PLACE AN "X" IN THE APPROPRIATE BOX TO INDICATE ABUTMENT TYPE

GENERAL NOTES

CONTINUOUSLY GROUND ALL METAL RAILINGS; SEE THE SPECIAL PROVISIONS. REFER TO THE ELECTRICAL PLANS AND ELECTRICAL SPECIAL PROVISIONS FOR DETAILS REGARDING BONDING MULTIPLE ELECTRICAL GROUNDING SYSTEMS.

MEASURE PAYMENT LENGTH BETWEEN THE OUTSIDE ENDS OF THE CONCRETE CURB.

CONCRETE CURB = 81 LBS./FT. (0.020 CU. YDS./FT.)

FINISH ALL EDGES OF CURB WITH ½" CHAMFER, EXCEPT WHERE OTHERWISE NOTED.

MAXIMUM SPACING OF CONTROL JOINTS ON SUPERSTRUCTURE, APPROACH AND WINGWALL IS 10 FT. SEE SUPERSTRUCTURE SHEET FOR JOINT SPACING.

CONCRETE CURB QUANTITIES ARE LISTED IN SUMMARY OF QUANTITIES FOR SUPERSTRUCTURE.

1. JOINT SEALANT PER MnDOT APPROVED/QUALIFIED PRODUCTS LIST - CRACK AND JOINT MATERIALS - SILICONE JOINT SEALERS.
2. REFER TO STANDARD FIGURE 5-397.632 FOR COVER PLATE DETAILS.
3. TO MAXIMIZE CLEARANCES FOR ANCHORAGES, PLACE TOP OF OUTSIDE LONGITUDINAL BARS 2" FROM DECK SURFACE (TYP.).

REVISION: 08-24-2016
APPROVED: NOVEMBER 6, 2013
Nancy Daubenberger
STATE BRIDGE ENGINEER

CERTIFIED BY _____ LICENSED PROFESSIONAL ENGINEER _____ DATE
NAME: LIC. NO.

TITLE: CONCRETE CURB FOR USE WITH ORNAMENTAL RAILING

DES: DR: CHK: CHK: APPROVED:

SHEET NO. OF SHEETS

FIG. 5-397.167

BRIDGE NO.

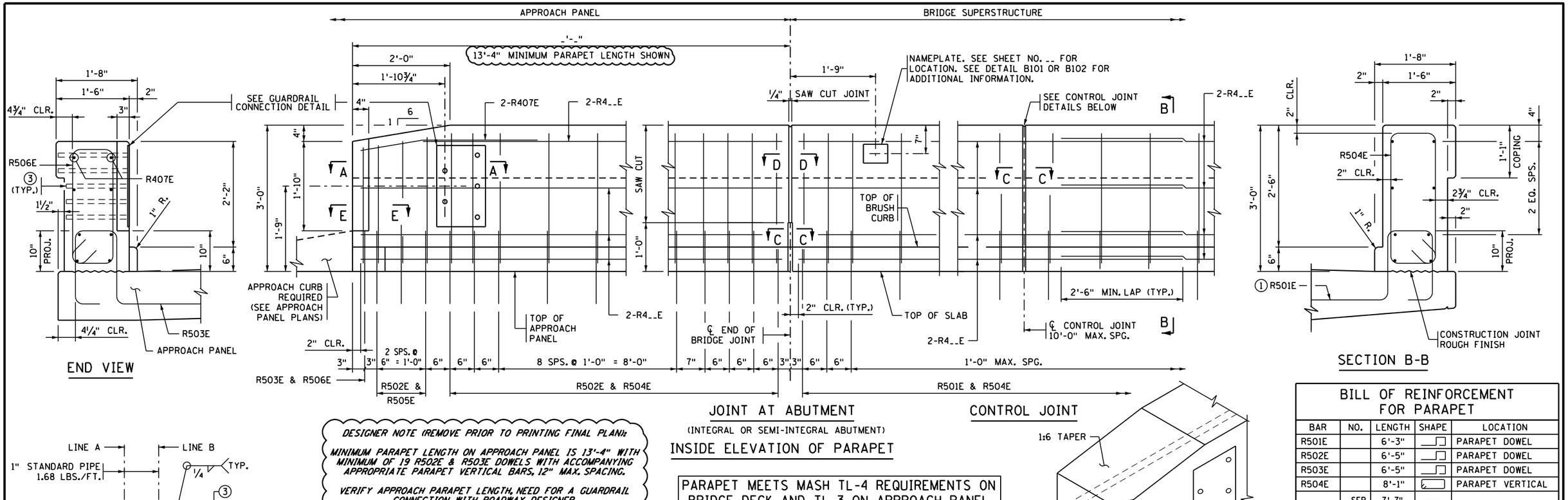

END VIEW

JOINT AT ABUTMENT

(INTEGRAL OR SEMI-INTEGRAL ABUTMENT)

INSIDE ELEVATION OF PARAPET

CONTROL JOINT

SECTION B-B

DESIGNER NOTE (REMOVE PRIOR TO PRINTING FINAL PLAN):

MINIMUM PARAPET LENGTH ON APPROACH PANEL IS 13'-4" WITH MINIMUM OF 19 R502E & R503E DOWELS WITH ACCOMPANYING APPROPRIATE PARAPET VERTICAL BARS, 12" MAX. SPACING.

VERIFY APPROACH PARAPET LENGTH, NEED FOR A GUARDRAIL CONNECTION, WITH ROADWAY DESIGNER.

REFER TO MEMO TO DESIGNERS #2020-01 FOR ADDITIONAL REQUIREMENTS REGARDING PARAPET PLACEMENT.

PARAPET MEETS MASH TL-4 REQUIREMENTS ON BRIDGE DECK AND TL-3 ON APPROACH PANEL

DESIGNER NOTE (REMOVE PRIOR TO PRINTING FINAL PLAN):

FOR BRIDGES WITH SUPERELEVATION EXCEEDING 2%, SHOW THE PARAPET FRONT FACE DIMENSIONS AS INDICATED ON THIS SHEET, AND ALSO CALCULATE AND SHOW THE PARAPET BACK FACE DIMENSIONS. ALSO VERIFY THAT BAR R501E, R502E & R503E HAS 10" MIN. PROJECTION WHEN CROSS SLOPE VARIES FROM NORMAL 0.02 FT/FT

BILL OF REINFORCEMENT FOR PARAPET

BAR	NO.	LENGTH	SHAPE	LOCATION
R501E		6'-3"		PARAPET DOWEL
R502E		6'-5"		PARAPET DOWEL
R503E		6'-5"		PARAPET DOWEL
R504E		8'-1"		PARAPET VERTICAL
R505E	__SER. OF 3	7'-7" TO 7'-11"		PARAPET VERTICAL
R506E		7'-3"		PARAPET VERTICAL
R407E		4'-4"		PARAPET LONGIT.
R4__E				PARAPET LONGIT.
R4__E				PARAPET LONGIT.
R4__E				PARAPET LONGIT.
R4__E				PARAPET LONGIT.
R4__E				PARAPET LONGIT.
R4__E				PARAPET LONGIT.

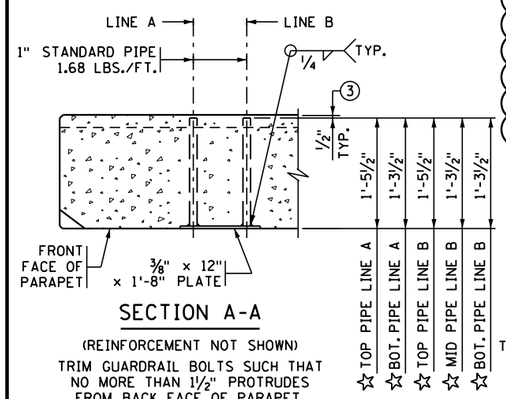

SECTION A-A

(REINFORCEMENT NOT SHOWN)

TRIM GUARDRAIL BOLTS SUCH THAT NO MORE THAN 1½" PROTRUDES FROM BACK FACE OF PARAPET.

☆ DIMENSIONS INCLUDE ⅜" PLATE

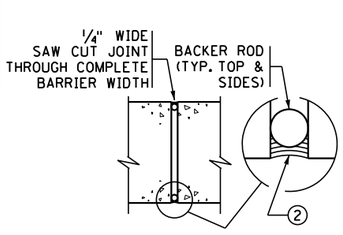

SECTION D-D

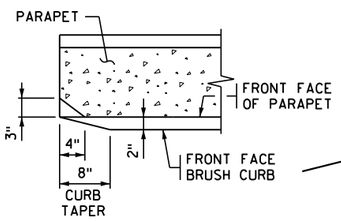

SECTION E-E

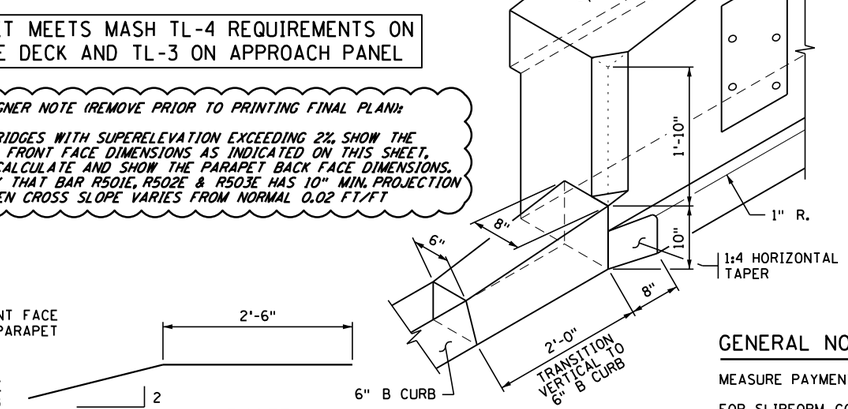

ISOMETRIC VIEW

(END OF PARAPET)

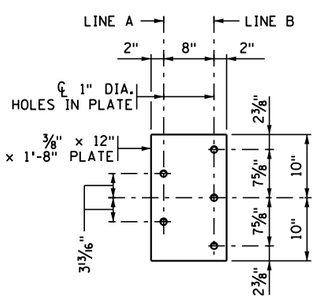

GUARDRAIL CONNECTION DETAIL

GALVANIZE AFTER FABRICATION PER SPEC. 3394
ESTIMATED WEIGHT = 37 LBS.

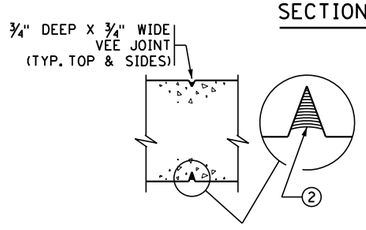

SECTION C-C

CAST-IN-PLACE CONSTRUCTION

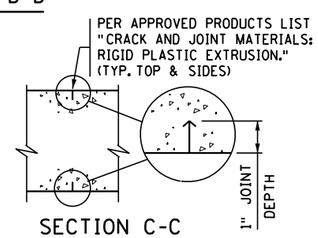

SECTION C-C

SLIPFORM CONSTRUCTION

CONTROL JOINT DETAILS

FOR SLIPFORM CONSTRUCTION: IMMEDIATELY AFTER CONCRETE IS PLACED AND WHILE IT IS STILL WET, CREATE A ONE INCH STRAIGHT GROOVE USING A TROWEL. INSERT RIGID PLASTIC EXTRUSION INTO GROOVE TO A DEPTH ⅛" BELOW THE SURFACE; FINISH OVER GROOVE COMPLETELY HIDING THE EXTRUSION.

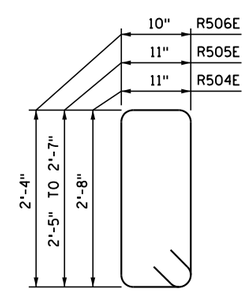

R504E, R505E, R506E

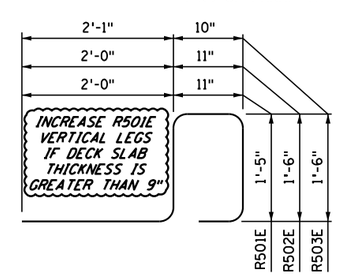

R501E, R502E, R503E

GENERAL NOTES

MEASURE PAYMENT LENGTH BETWEEN THE OUTSIDE ENDS OF THE PARAPET.

FOR SLIPFORM CONSTRUCTION, TIE 100% OF THE REINFORCEMENT BAR INTERSECTIONS IN THE PARAPET.

CONCRETE PARAPET = 639 LBS./FT. (0.158 CU. YDS./FT.)

FINISH ALL EDGES OF PARAPET WITH ½" CHAMFER, EXCEPT WHERE OTHERWISE NOTED.

SPACE CONTROL JOINTS AT 10 FT. MAXIMUM. REFER TO SUPERSTRUCTURE SHEET FOR SPECIFIC SPACING INFORMATION.

GUARDRAIL CONNECTION TO BE STRUCTURAL STEEL IN ACCORDANCE WITH SPEC. 3306.

GUARDRAIL CONNECTION AND NAMEPLATE TO BE CONSIDERED INCIDENTAL.

PARAPET QUANTITIES ARE LISTED IN SUMMARY OF QUANTITIES FOR SUPERSTRUCTURE.

(1) PLACE BAR ON TOP OF BOTTOM REINFORCEMENT MAT IN DECK.

(2) JOINT SEALANT PER MnDOT APPROVED/QUALIFIED PRODUCTS LIST - CRACK AND JOINT MATERIALS - SILICONE JOINT SEALERS.

(3) REMOVE CONCRETE FROM PIPE ENDS AFTER SLIPFORMING OR FORM REMOVAL.

REVISED:

APPROVED: APRIL 09, 2020

Kevin Western

STATE BRIDGE ENGINEER

CERTIFIED BY _____ LICENSED PROFESSIONAL ENGINEER _____ DATE

NAME: LIC. NO.

TITLE: CONCRETE PARAPET (TYPE P-4, TL-4)

INTEGRAL OR SEMI-INTEGRAL ABUTMENT (WITHOUT CONCRETE WEARING COURSE)

DES: DR: CHK: CHK:

SHEET NO. OF SHEETS

APPROVED:

CODE 70

FIG. 5-397.173(A)

BRIDGE NO.

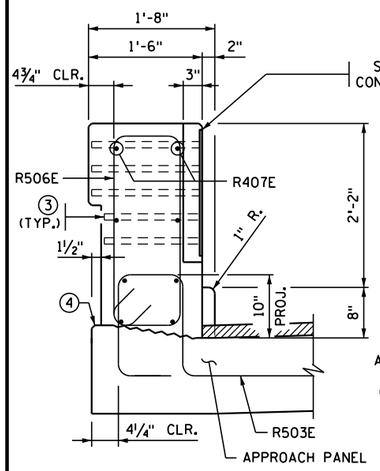

END VIEW

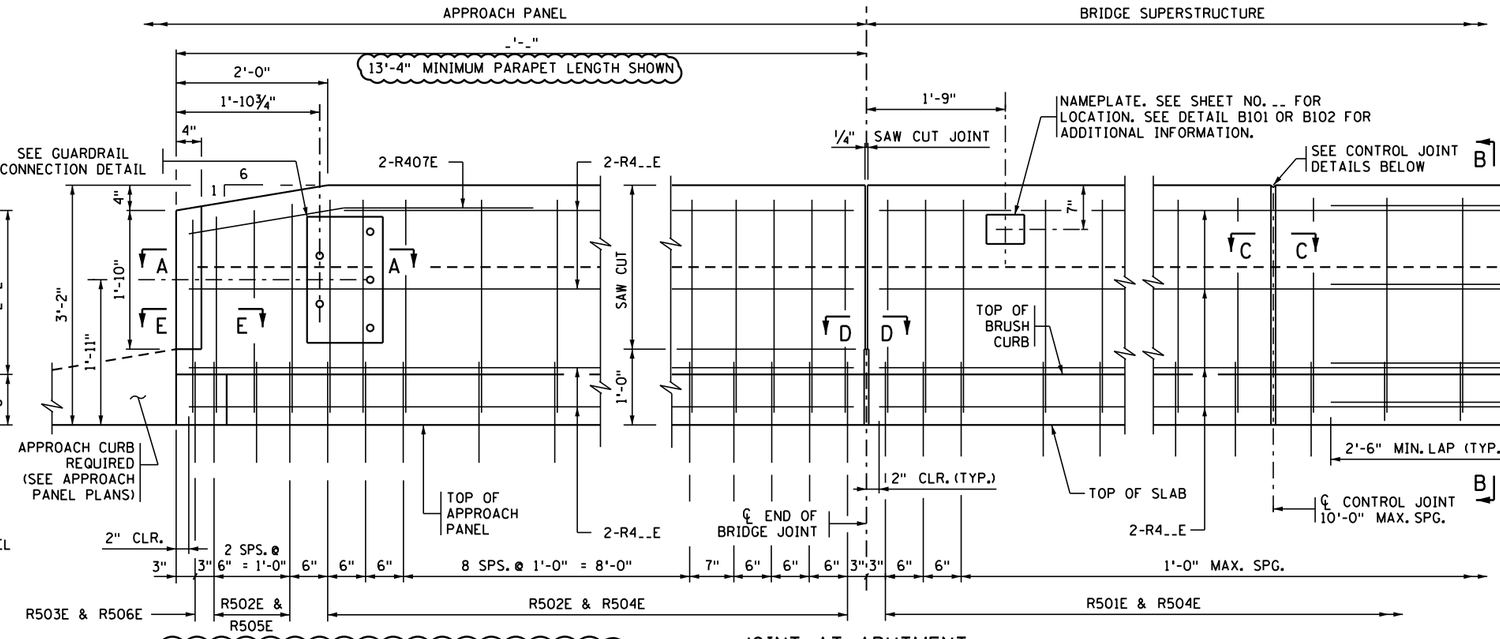

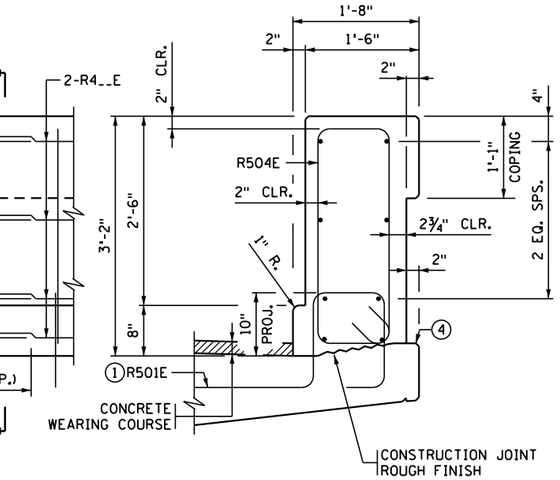

SECTION B-B

DESIGNER NOTE (REMOVE PRIOR TO PRINTING FINAL PLAN):

MINIMUM PARAPET LENGTH ON APPROACH PANEL IS 13'-4" WITH MINIMUM OF 19 R502E AND R503E DOWELS WITH ACCOMPANYING APPROPRIATE PARAPET VERTICAL BARS, 12" MAX. SPACING. VERIFY APPROACH PARAPET LENGTH, NEED FOR A GUARDRAIL CONNECTION, WITH ROADWAY DESIGNER. REFER TO MEMO TO DESIGNERS #2020-01 FOR ADDITIONAL REQUIREMENTS REGARDING PARAPET PLACEMENT.

DESIGNER NOTE (REMOVE PRIOR TO PRINTING FINAL PLAN):

FOR BRIDGES WITH SUPERELEVATION EXCEEDING 2%, SHOW THE PARAPET FRONT FACE DIMENSIONS AS INDICATED ON THIS SHEET, AND ALSO CALCULATE AND SHOW THE PARAPET BACK FACE DIMENSIONS. ALSO VERIFY THAT BAR R501E, R502E & R503E HAS 10" MIN. PROJECTION WHEN CROSS SLOPE VARIES FROM NORMAL 0.02 FT/FT.

JOINT AT ABUTMENT

(INTEGRAL OR SEMI-INTEGRAL ABUTMENT)

INSIDE ELEVATION OF PARAPET

(CONCRETE WEARING COURSE NOT SHOWN)

PARAPET MEETS MASH TL-4 REQUIREMENTS ON BRIDGE DECK AND TL-3 ON APPROACH PANEL

CONTROL JOINT

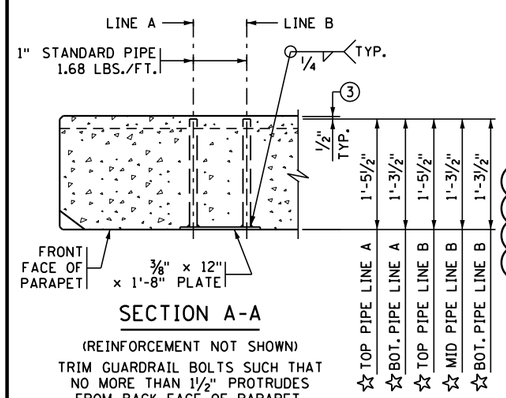

SECTION A-A

(REINFORCEMENT NOT SHOWN)

TRIM GUARDRAIL BOLTS SUCH THAT NO MORE THAN 1½" PROTRUDES FROM BACK FACE OF PARAPET.

☆ DIMENSIONS INCLUDE ⅜" PLATE

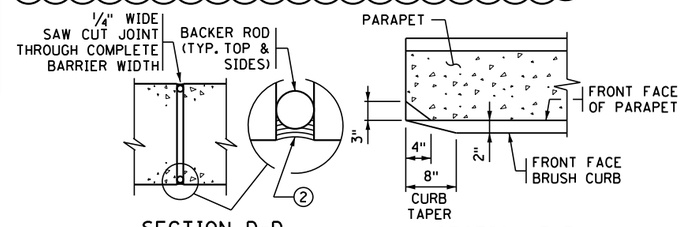

SECTION D-D

SECTION E-E

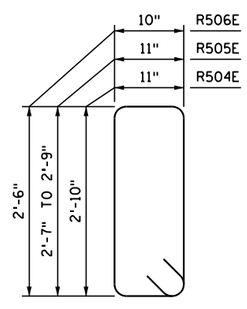

R504E, R505E, R506E

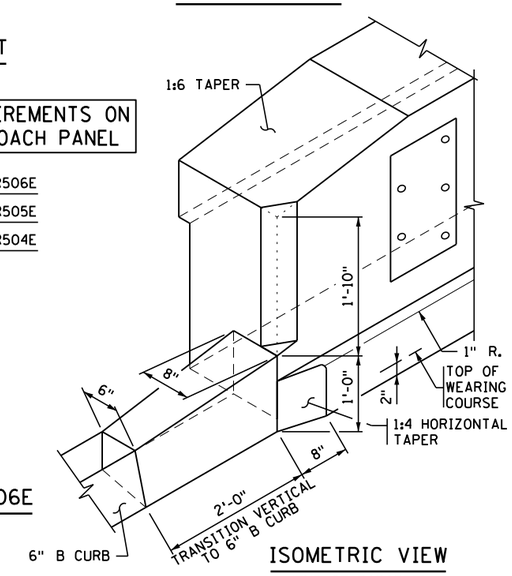

ISOMETRIC VIEW

(END OF PARAPET)
(CONCRETE WEARING COURSE NOT SHOWN)

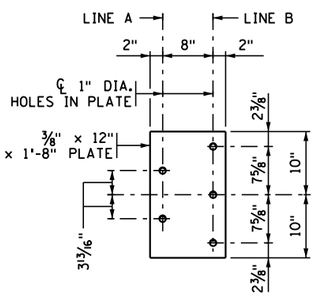

GUARDRAIL CONNECTION DETAIL

GALVANIZE AFTER FABRICATION PER SPEC. 3394
ESTIMATED WEIGHT = 37 LBS.

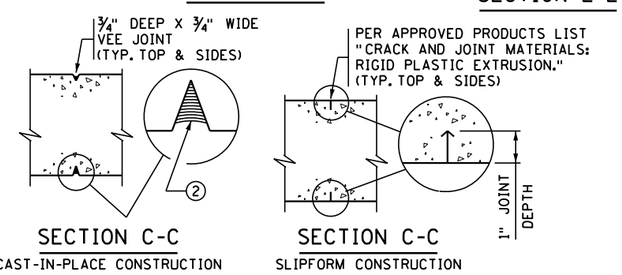

SECTION C-C
CAST-IN-PLACE CONSTRUCTION

SECTION C-C
SLIPFORM CONSTRUCTION

CONTROL JOINT DETAILS

FOR SLIPFORM CONSTRUCTION: IMMEDIATELY AFTER CONCRETE IS PLACED AND WHILE IT IS STILL WET, CREATE A ONE INCH STRAIGHT GROOVE USING A TROWEL. INSERT RIGID PLASTIC EXTRUSION INTO GROOVE TO A DEPTH ⅛" BELOW THE SURFACE; FINISH OVER GROOVE COMPLETELY HIDING THE EXTRUSION.

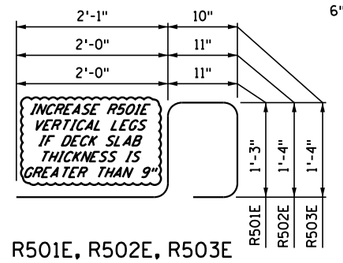

R501E, R502E, R503E

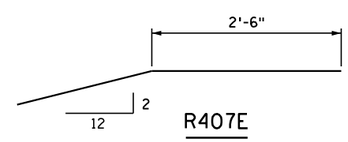

R407E

BILL OF REINFORCEMENT FOR PARAPET

BAR	NO.	LENGTH	SHAPE	LOCATION
R501E		5'-11"		PARAPET DOWEL
R502E		6'-1"		PARAPET DOWEL
R503E		6'-1"		PARAPET DOWEL
R504E		8'-5"		PARAPET VERTICAL
R505E	__SER. OF 3	7'-11" TO 8'-3"		PARAPET VERTICAL
R506E		7'-7"		PARAPET VERTICAL
R407E		4'-4"		PARAPET LONGIT.
R4__E				PARAPET LONGIT.
R4__E				PARAPET LONGIT.
R4__E				PARAPET LONGIT.
R4__E				PARAPET LONGIT.

GENERAL NOTES

MEASURE PAYMENT LENGTH BETWEEN THE OUTSIDE ENDS OF THE PARAPET.

FOR SLIPFORM CONSTRUCTION, TIE 100% OF THE REINFORCEMENT BAR INTERSECTIONS IN THE PARAPET.

CONCRETE PARAPET = 658 LBS./FT. (0.162 CU. YDS./FT.)

FINISH ALL EDGES OF PARAPET WITH ½" CHAMFER, EXCEPT WHERE OTHERWISE NOTED.

SPACE CONTROL JOINTS AT 10 FT. MAXIMUM. REFER TO SUPERSTRUCTURE SHEET FOR SPECIFIC SPACING INFORMATION.

GUARDRAIL CONNECTION TO BE STRUCTURAL STEEL IN ACCORDANCE WITH SPEC. 3306.

GUARDRAIL CONNECTION AND NAMEPLATE TO BE CONSIDERED INCIDENTAL.

PARAPET QUANTITIES ARE LISTED IN SUMMARY OF QUANTITIES FOR SUPERSTRUCTURE.

① PLACE BAR ON TOP OF BOTTOM REINFORCEMENT MAT IN DECK.

② JOINT SEALANT PER MnDOT APPROVED/QUALIFIED PRODUCTS LIST - CRACK AND JOINT MATERIALS - SILICONE JOINT SEALERS.

③ REMOVE CONCRETE FROM PIPE ENDS AFTER SLIPFORMING OR FORM REMOVAL.

④ MATCH GUTTERLINE ELEVATION.

CODE 70

FIG. 5-397.173(B)

REVISED:

APPROVED: APRIL 09, 2020
Kevin Western
STATE BRIDGE ENGINEER

CERTIFIED BY _____ LICENSED PROFESSIONAL ENGINEER _____ DATE
NAME: LIC. NO.

TITLE: CONCRETE PARAPET (TYPE P-4, TL-4)
INTEGRAL OR SEMI-INTEGRAL ABUTMENT (WITH 2" CONCRETE WEARING COURSE)

DES: DR: APPROVED:
CHK: CHK:
SHEET NO. OF SHEETS

BRIDGE NO.

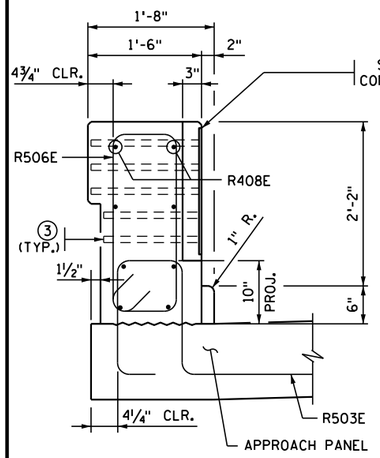

END VIEW

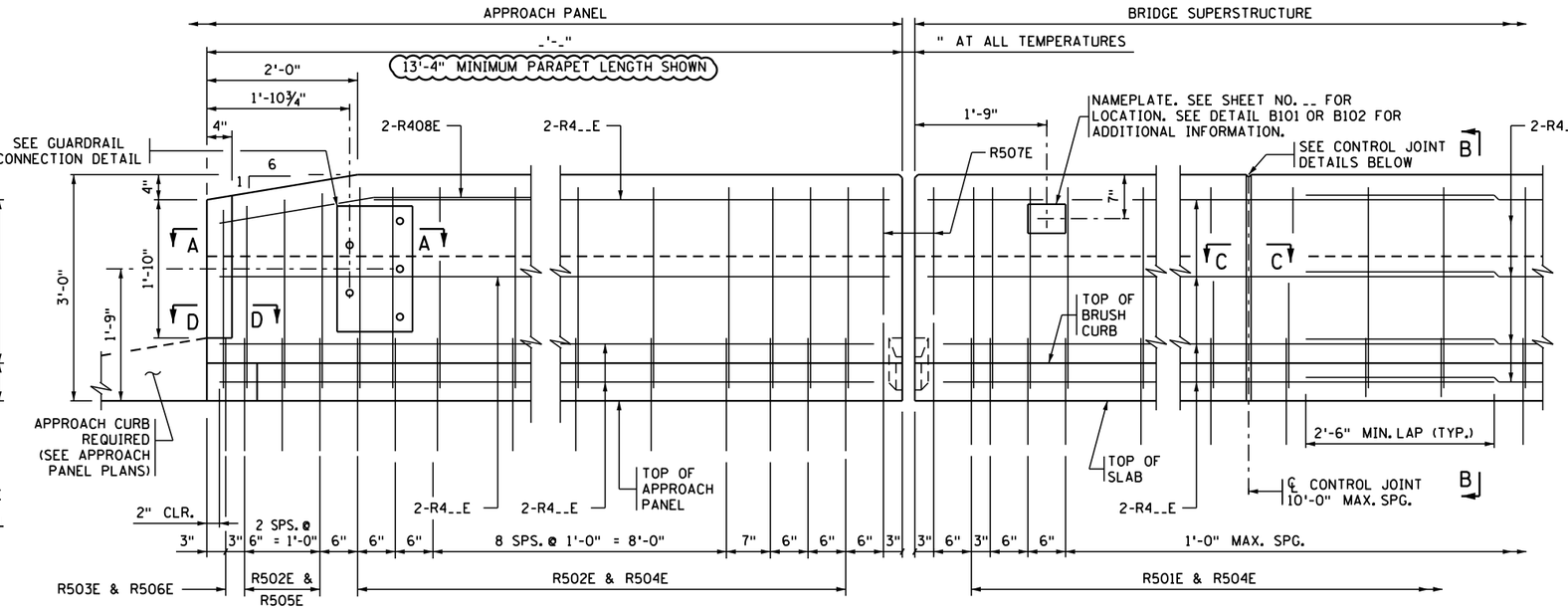

EXPANSION JOINT

EXPANSION DEVICE NOT SHOWN

INSIDE ELEVATION OF PARAPET

CONTROL JOINT

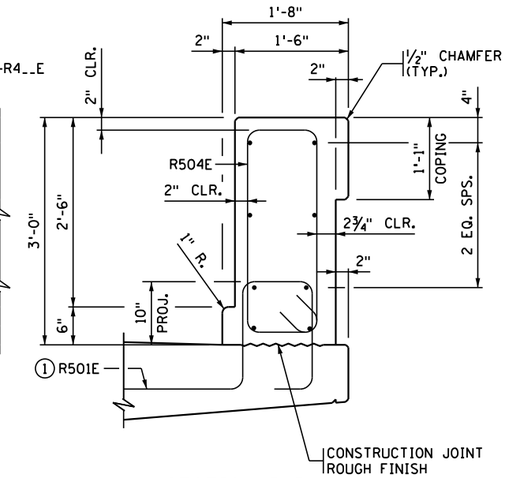

SECTION B-B

DESIGNER NOTE (REMOVE PRIOR TO PRINTING FINAL PLAN):

MINIMUM PARAPET LENGTH ON APPROACH PANEL IS 13'-4" WITH MINIMUM OF 18 R502E AND R503E DOWELS WITH ACCOMPANYING APPROPRIATE PARAPET VERTICAL BARS, 12" MAX. SPACING. VERIFY APPROACH PARAPET LENGTH, NEED FOR A GUARDRAIL CONNECTION, WITH ROADWAY DESIGNER. REFER TO MEMO TO DESIGNERS #2020-01 FOR ADDITIONAL REQUIREMENTS REGARDING PARAPET PLACEMENT.

PARAPET MEETS MASH TL-4 REQUIREMENTS ON BRIDGE DECK AND TL-3 ON APPROACH PANEL

DESIGNER NOTE (REMOVE PRIOR TO PRINTING FINAL PLAN):

FOR BRIDGES WITH SUPERELEVATION EXCEEDING 2%, SHOW THE PARAPET FRONT FACE DIMENSIONS AS INDICATED ON THIS SHEET, AND ALSO CALCULATE AND SHOW THE PARAPET BACK FACE DIMENSIONS. ALSO VERIFY THAT BAR R501E, R502E & R503E HAS 10" MIN. PROJECTION WHEN CROSS SLOPE VARIES FROM NORMAL 0.02 FT/FT

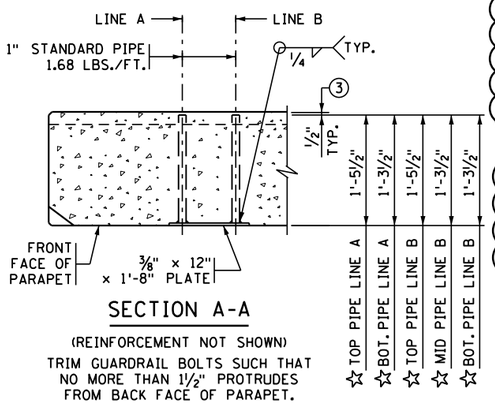

SECTION A-A

(REINFORCEMENT NOT SHOWN)

TRIM GUARDRAIL BOLTS SUCH THAT NO MORE THAN 1½" PROTRUDES FROM BACK FACE OF PARAPET.

☆ DIMENSIONS INCLUDE ⅜" PLATE

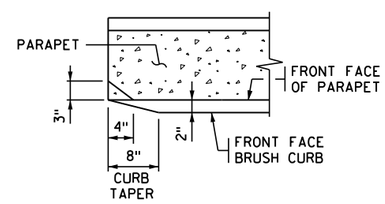

SECTION D-D

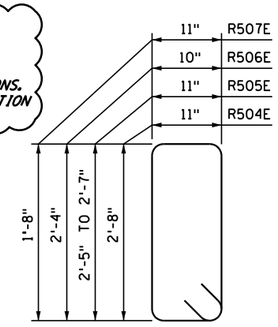

R504E, R505E, R506E, R507E

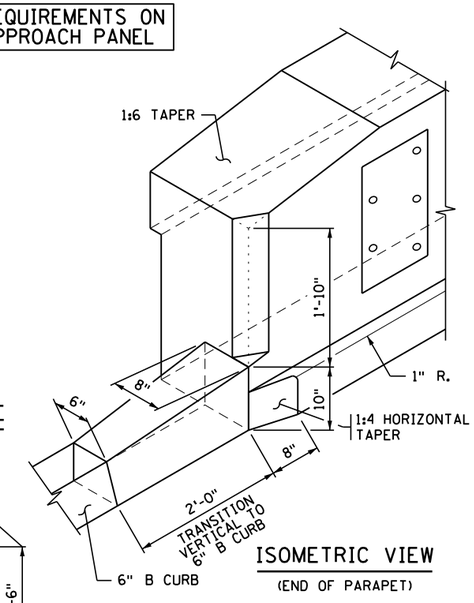

ISOMETRIC VIEW

(END OF PARAPET)

BILL OF REINFORCEMENT FOR PARAPET				
BAR	NO.	LENGTH	SHAPE	LOCATION
R501E		6'-3"		PARAPET DOWEL
R502E		6'-5"		PARAPET DOWEL
R503E		6'-5"		PARAPET DOWEL
R504E		8'-1"		PARAPET VERTICAL
R505E	__SER. OF 3	7'-7" TO 7'-11"		PARAPET VERTICAL
R506E		7'-3"		PARAPET VERTICAL
R507E		6'-1"		PARAPET VERTICAL
R408E		4'-4"		PARAPET LONGIT.
R4__E				PARAPET LONGIT.
R4__E				PARAPET LONGIT.
R4__E				PARAPET LONGIT.
R4__E				PARAPET LONGIT.
R4__E				PARAPET LONGIT.
R4__E				PARAPET LONGIT.

GENERAL NOTES

MEASURE PAYMENT LENGTH BETWEEN THE OUTSIDE ENDS OF THE PARAPET.

FOR SLIPFORM CONSTRUCTION, TIE 100% OF THE REINFORCEMENT BAR INTERSECTIONS IN THE PARAPET.

CONCRETE PARAPET = 639 LBS./FT. (0.158 CU. YDS./FT.)

FINISH ALL EDGES OF PARAPET WITH ½" CHAMFER, EXCEPT WHERE OTHERWISE NOTED.

SPACE CONTROL JOINTS AT 10 FT. MAXIMUM. REFER TO SUPERSTRUCTURE SHEET FOR SPECIFIC SPACING INFORMATION.

GUARDRAIL CONNECTION TO BE STRUCTURAL STEEL IN ACCORDANCE WITH SPEC. 3306.

GUARDRAIL CONNECTION AND NAMEPLATE TO BE CONSIDERED INCIDENTAL.

PARAPET QUANTITIES ARE LISTED IN SUMMARY OF QUANTITIES FOR SUPERSTRUCTURE.

① PLACE BAR ON TOP OF BOTTOM REINFORCEMENT MAT IN DECK.

② JOINT SEALANT PER MnDOT APPROVED/QUALIFIED PRODUCTS LIST - CRACK AND JOINT MATERIALS - SILICONE JOINT SEALERS.

③ REMOVE CONCRETE FROM PIPE ENDS AFTER SLIPFORMING OR FORM REMOVAL.

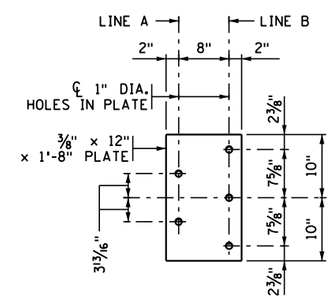

GUARDRAIL CONNECTION DETAIL

GALVANIZE AFTER FABRICATION PER SPEC. 3394

ESTIMATED WEIGHT = 37 LBS.

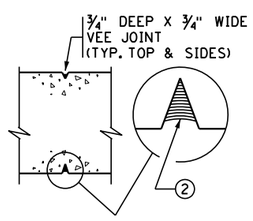

SECTION C-C

CAST-IN-PLACE CONSTRUCTION

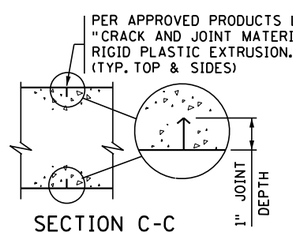

SECTION C-C

SLIPFORM CONSTRUCTION

CONTROL JOINT DETAILS

FOR SLIPFORM CONSTRUCTION: IMMEDIATELY AFTER CONCRETE IS PLACED AND WHILE IT IS STILL WET, CREATE A ONE INCH STRAIGHT GROOVE USING A TROWEL. INSERT RIGID PLASTIC EXTRUSION INTO GROOVE TO A DEPTH ⅛" BELOW THE SURFACE; FINISH OVER GROOVE COMPLETELY HIDING THE EXTRUSION.

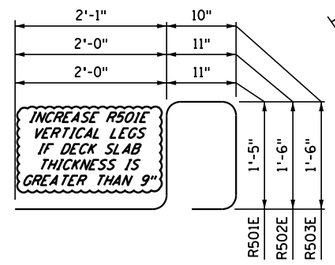

R501E, R502E, R503E

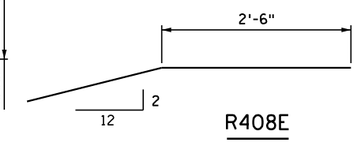

R408E

CODE 70

FIG. 5-397.173(C)

REVISED:

APPROVED: APRIL 09, 2020

Kevin Western

STATE BRIDGE ENGINEER

CERTIFIED BY _____ LICENSED PROFESSIONAL ENGINEER _____ DATE

NAME: LIC. NO.

TITLE: CONCRETE PARAPET (TYPE P-4, TL-4)

PARAPET ABUTMENT (WITHOUT CONCRETE WEARING COURSE)

DES: DR:

CHK: CHK:

APPROVED:

SHEET NO. OF SHEETS

BRIDGE NO.

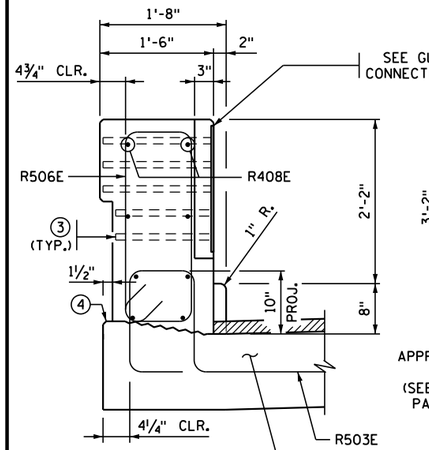

END VIEW

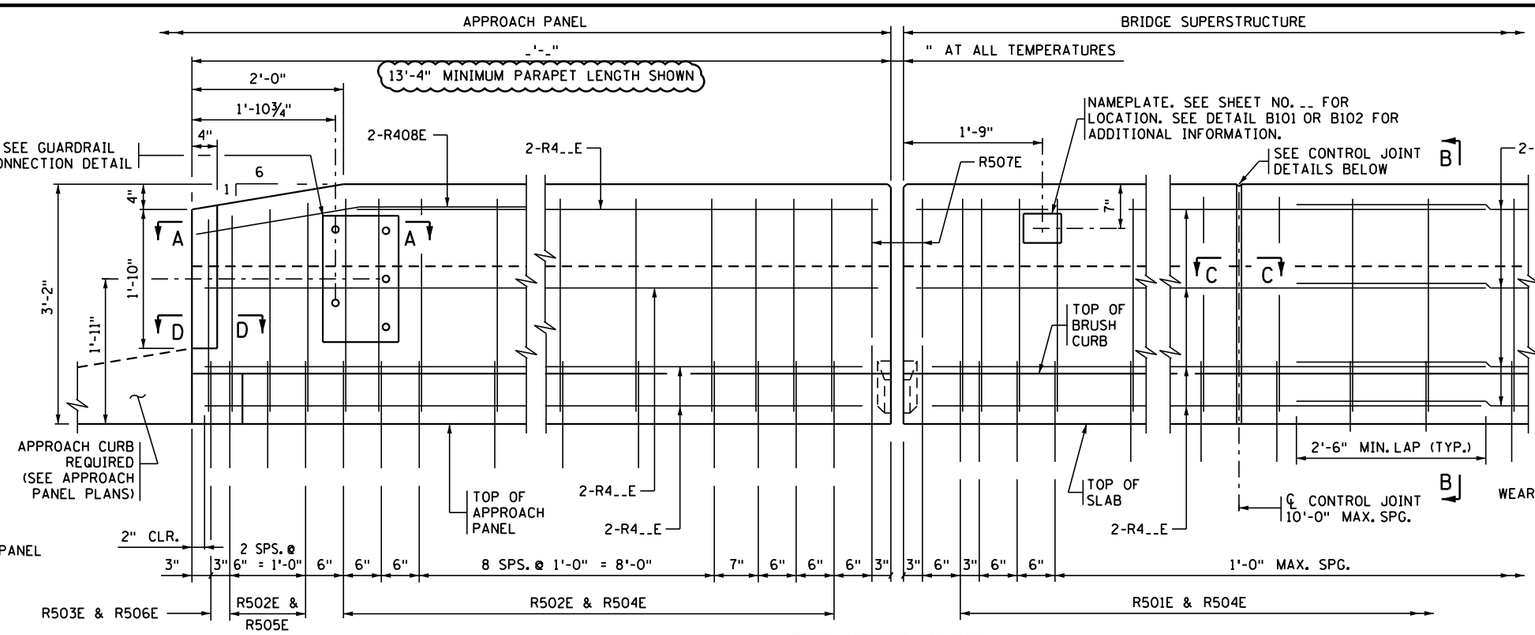

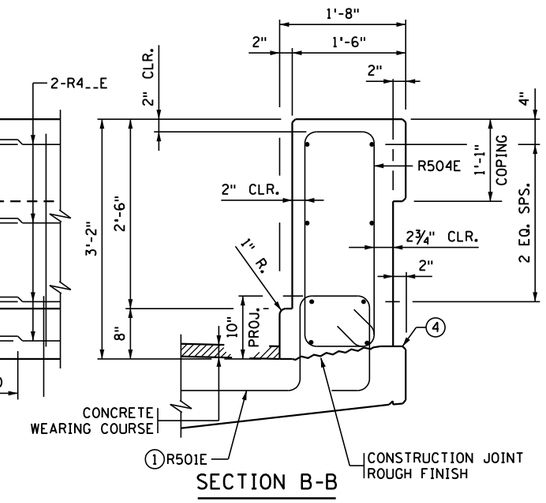

SECTION B-B

EXPANSION JOINT

EXPANSION DEVICE NOT SHOWN

INSIDE ELEVATION OF PARAPET

CONCRETE WEARING COURSE NOT SHOWN

PARAPET MEETS MASH TL-4 REQUIREMENTS ON BRIDGE DECK AND TL-3 ON APPROACH PANEL

CONTROL JOINT

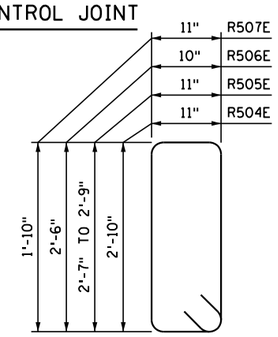

R504E, R505E, R506E, R507E

BILL OF REINFORCEMENT FOR PARAPET				
BAR	NO.	LENGTH	SHAPE	LOCATION
R501E		5'-11"		PARAPET DOWEL
R502E		6'-1"		PARAPET DOWEL
R503E		6'-1"		PARAPET DOWEL
R504E		8'-5"		PARAPET VERTICAL
R505E	--SER. OF 3	7'-11" TO 8'-3"		PARAPET VERTICAL
R506E		7'-5"		PARAPET VERTICAL
R507E		6'-5"		PARAPET VERTICAL
R408E		4'-4"		PARAPET LONGIT.
R4__E				PARAPET LONGIT.
R4__E				PARAPET LONGIT.
R4__E				PARAPET LONGIT.
R4__E				PARAPET LONGIT.

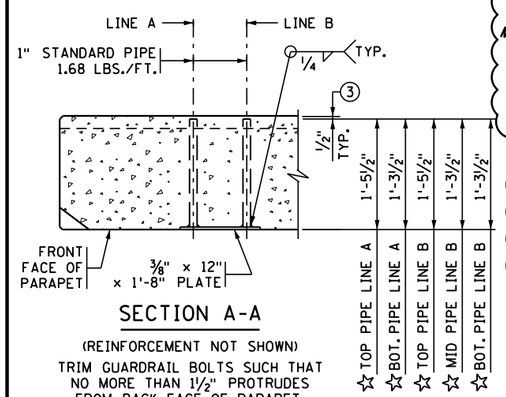

SECTION A-A

(REINFORCEMENT NOT SHOWN)

TRIM GUARDRAIL BOLTS SUCH THAT NO MORE THAN 1½" PROTRUDES FROM BACK FACE OF PARAPET.

☆ DIMENSIONS INCLUDE ⅜" PLATE

DESIGNER NOTE (REMOVE PRIOR TO PRINTING FINAL PLAN):

MINIMUM PARAPET LENGTH ON APPROACH PANEL IS 13'-4" WITH MINIMUM OF 18 R502E & R503E DOWELS WITH ACCOMPANYING APPROPRIATE PARAPET VERTICAL BARS, 12" MAX. SPACING. VERIFY APPROACH PARAPET LENGTH, NEED FOR A GUARDRAIL CONNECTION, WITH ROADWAY DESIGNER. REFER TO MEMO TO DESIGNERS #2020-01 FOR ADDITIONAL REQUIREMENTS REGARDING PARAPET PLACEMENT.

DESIGNER NOTE (REMOVE PRIOR TO PRINTING FINAL PLAN):

FOR BRIDGES WITH SUPERELEVATION EXCEEDING 2%, SHOW THE PARAPET FRONT FACE DIMENSIONS AS INDICATED ON THIS SHEET, AND ALSO CALCULATE AND SHOW THE PARAPET BACK FACE DIMENSIONS. ALSO VERIFY THAT BAR R501E, R502E & R503E HAS 10" MIN. PROJECTION WHEN CROSS SLOPE VARIES FROM NORMAL 0.02 FT/FT

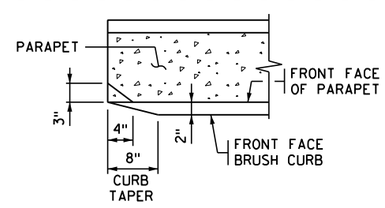

SECTION D-D

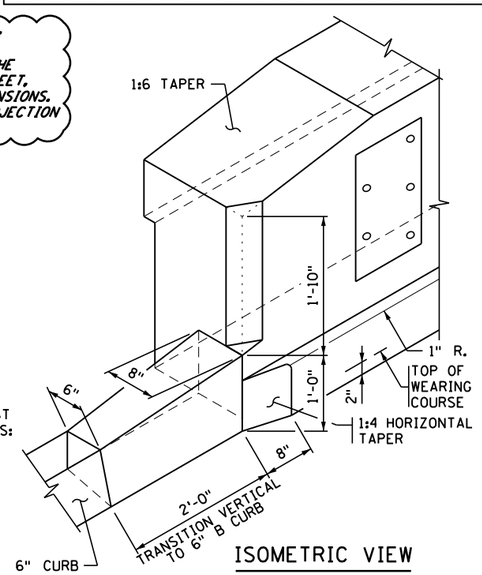

ISOMETRIC VIEW

(END OF PARAPET)
(CONCRETE WEARING COURSE NOT SHOWN)

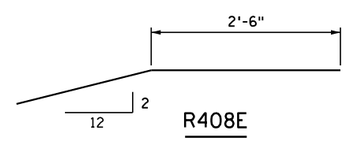

R408E

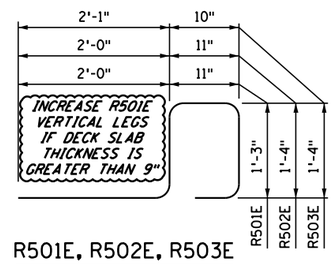

R501E, R502E, R503E

GENERAL NOTES

MEASURE PAYMENT LENGTH BETWEEN THE OUTSIDE ENDS OF THE PARAPET.

FOR SLIPFORM CONSTRUCTION, TIE 100% OF THE REINFORCEMENT BAR INTERSECTIONS IN THE PARAPET.

CONCRETE PARAPET = 658 LBS./FT. (0.162 CU. YDS./FT.)

FINISH ALL EDGES OF PARAPET WITH ½" CHAMFER, EXCEPT WHERE OTHERWISE NOTED.

SPACE CONTROL JOINTS AT 10 FT. MAXIMUM. REFER TO SUPERSTRUCTURE SHEET FOR SPECIFIC SPACING INFORMATION.

GUARDRAIL CONNECTION TO BE STRUCTURAL STEEL IN ACCORDANCE WITH SPEC. 3306.

GUARDRAIL CONNECTION AND NAMEPLATE TO BE CONSIDERED INCIDENTAL.

PARAPET QUANTITIES ARE LISTED IN SUMMARY OF QUANTITIES FOR SUPERSTRUCTURE.

① PLACE BAR ON TOP OF BOTTOM REINFORCEMENT MAT IN DECK.

② JOINT SEALANT PER MnDOT APPROVED/QUALIFIED PRODUCTS LIST - CRACK AND JOINT MATERIALS - SILICONE JOINT SEALERS.

③ REMOVE CONCRETE FROM PIPE ENDS AFTER SLIPFORMING OR FORM REMOVAL.

④ MATCH GUTTERLINE ELEVATION.

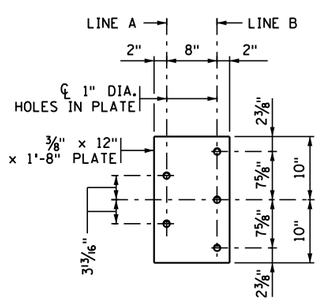

GUARDRAIL CONNECTION DETAIL

GALVANIZE AFTER FABRICATION PER SPEC. 3394
ESTIMATED WEIGHT = 37 LBS.

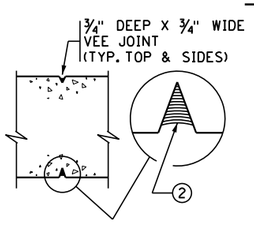

SECTION C-C

CAST-IN-PLACE CONSTRUCTION

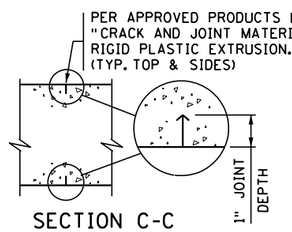

SECTION C-C

SLIPFORM CONSTRUCTION

CONTROL JOINT DETAILS

FOR SLIPFORM CONSTRUCTION: IMMEDIATELY AFTER CONCRETE IS PLACED AND WHILE IT IS STILL WET, CREATE A ONE INCH STRAIGHT GROOVE USING A TROWEL. INSERT RIGID PLASTIC EXTRUSION INTO GROOVE TO A DEPTH ⅛" BELOW THE SURFACE; FINISH OVER GROOVE COMPLETELY HIDING THE EXTRUSION.

REVISED:

APPROVED: APRIL 09, 2020
Kevin Western
STATE BRIDGE ENGINEER

CERTIFIED BY _____ LICENSED PROFESSIONAL ENGINEER _____ DATE

NAME: LIC. NO.

TITLE: CONCRETE PARAPET (TYPE P-4, TL-4)
PARAPET ABUTMENT
(WITH 2" CONCRETE WEARING COURSE)

DES: DR: CHK: CHK:

APPROVED:

SHEET NO. OF SHEETS

CODE 70

FIG. 5-397.173(D)

BRIDGE NO.

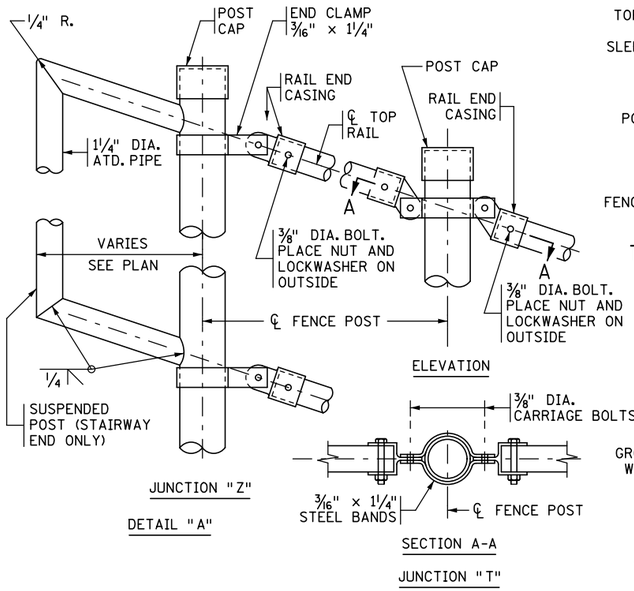

POST CONNECTIONS ON STAIRWAY

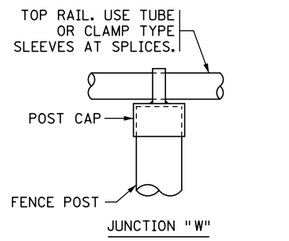

TOP OF INTERMEDIATE POST ON RAMP

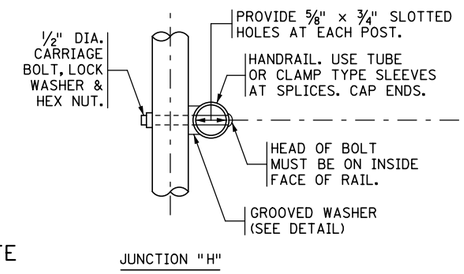

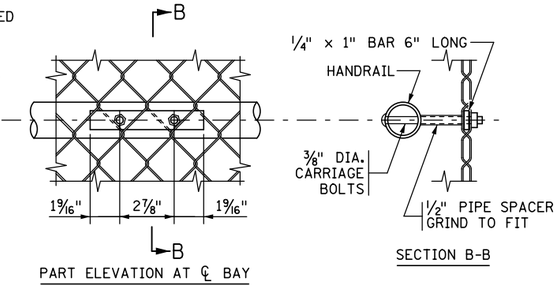

HANDRAIL

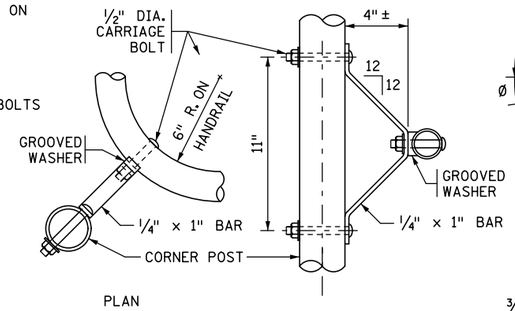

HANDRAIL CORNER DETAIL

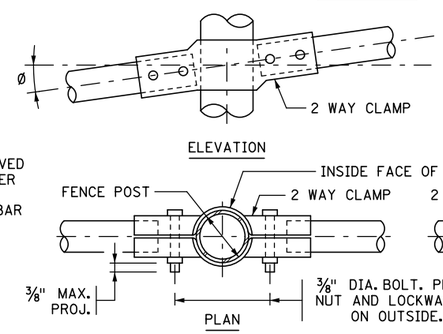

JUNCTION "Y"

2 WAY CLAMP BENDING TABLE	
GRADE OF FENCE	Ø
0° TO 2°	0°
2° TO 6°	4°
6° TO 10°	8°

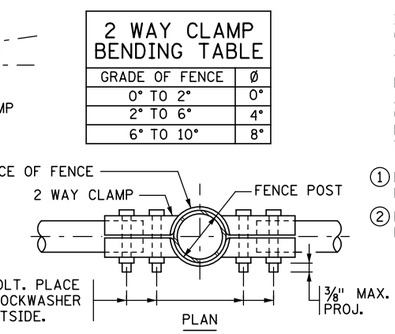

JUNCTION "X"

GENERAL NOTES

REFER TO SPEC. 2557 AND SPECIAL PROVISIONS FOR ADDITIONAL REQUIREMENTS AND BASIS OF PAYMENT.

REFER TO CONCRETE CURB PLAN SHEET FOR CURB DETAILS AND REINFORCEMENT.

MEASURE THE LENGTH OF "WIRE FENCE, DESIGN W-1" FOR PAYMENT BETWEEN THE CENTERS OF END RAILPOSTS (INCLUDING SUSPENDED END POSTS).

CONTINUOUSLY GROUND ALL METAL FENCE; SEE THE SPECIAL PROVISIONS. REFER TO THE ELECTRICAL PLANS AND ELECTRICAL SPECIAL PROVISIONS FOR DETAILS REGARDING BONDING MULTIPLE ELECTRICAL GROUNDING SYSTEMS.

ALL PIPE DIAMETERS ARE NOMINAL.

MAX. SPACING FOR 3" STANDARD PIPE POSTS IS 8 FT.

INSTALL FENCE POSTS AND ANCHORAGES VERTICAL UNLESS OTHERWISE NOTED. FOR POST SPACING, LOCATION, ANCHORAGE TYPE AND OTHER DETAILS SEE PLAN SHEET NO. ___.

PROVIDE WIRE TIES WITH 9 GA. (0.148" CORE) ALUMINUM PER ASTM B 211, ALLOY 1100 H18 WITH VINYL COATING (6 GA. AFTER COATING) OR 10 GA. (0.135" CORE) STEEL CL. 3 GALV. WIRE WITH FUSION BONDED VINYL COATING (9 GA. AFTER COATING). USE SAME VINYL THICKNESS COATING REQUIREMENTS AS VINYL COATED FABRIC.

1. FURNISH AND INSTALL TYPE C FENCE POST ANCHORAGES PER B906 FENCE POST ANCHORAGE PLAN SHEET.
2. FURNISH AND INSTALL TYPE B FENCE POST ANCHORAGES PER B906 FENCE POST ANCHORAGE PLAN SHEET.

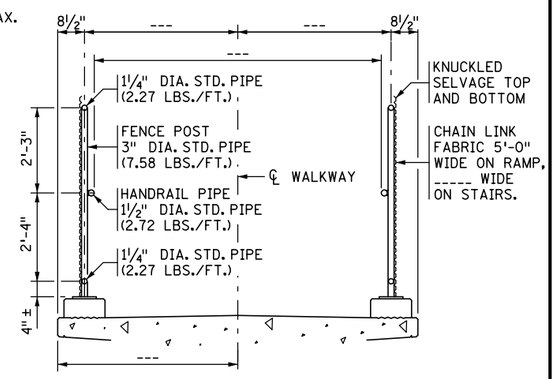

TYPICAL SECTION THROUGH WALKWAY

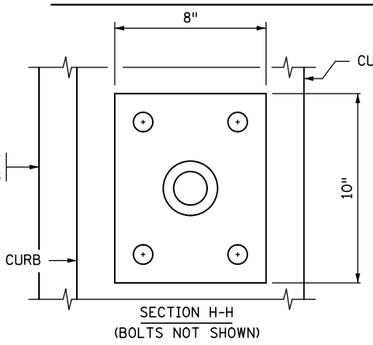

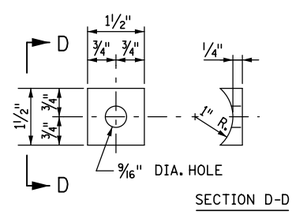

GROOVED WASHER

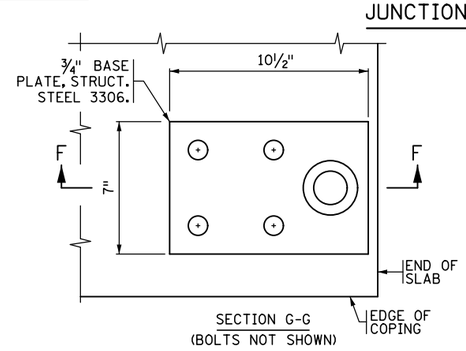

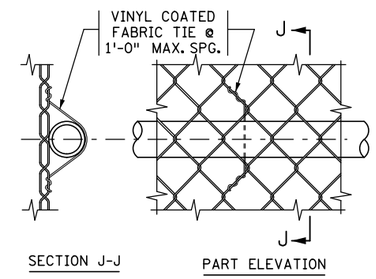

FABRIC TIE

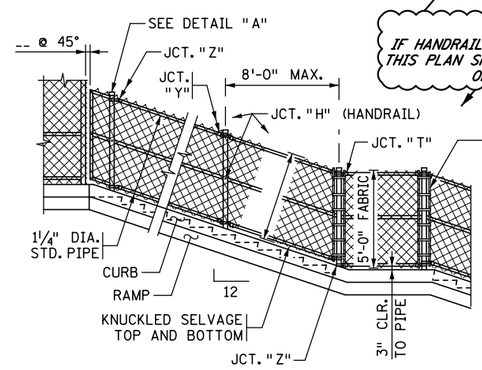

DESIGNER NOTE:
IF HANDRAIL PIPE IS NOT REQUIRED, UPDATE THIS PLAN SHEET TO SHOW CHAIN LINK FENCE ON INSIDE OF WALKWAY

PARTIAL ELEVATION ON STAIRWAY

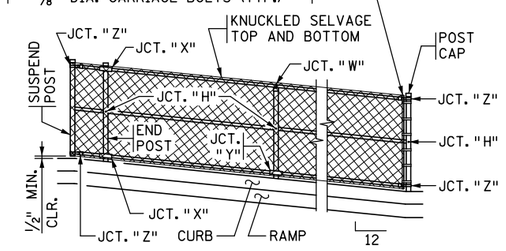

PARTIAL ELEVATION ON RAMP

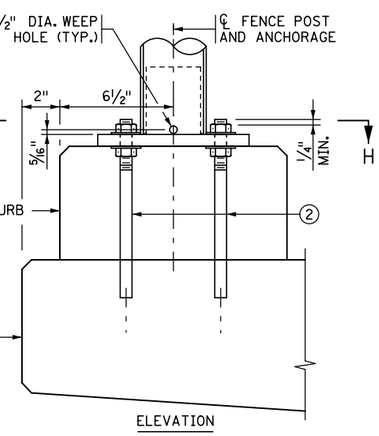

BOLT ANCHORAGE FOR INTERMEDIATE FENCE POSTS 2

FOR SLAB THICKNESS OF 7" (MIN.)

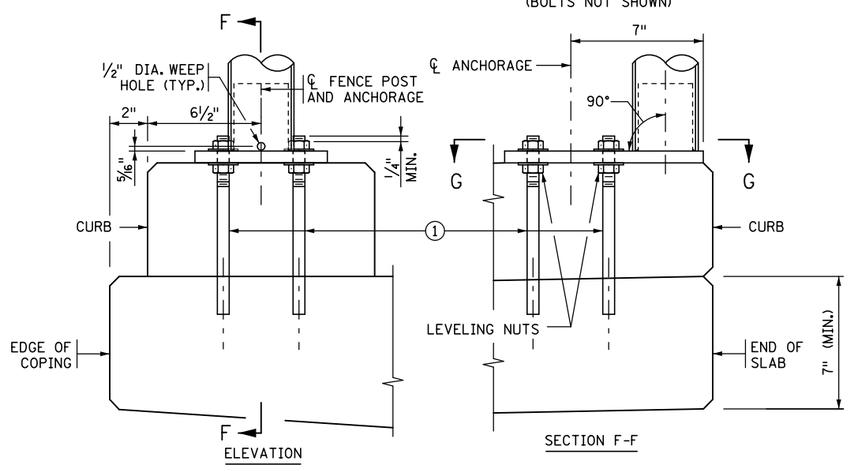

BOLT ANCHORAGE FOR FENCE POSTS AT END OF SLAB 1

FOR SLAB THICKNESS OF 7" (MIN.)

REVISION:	CERTIFIED BY ____ LICENSED PROFESSIONAL ENGINEER ____ DATE	TITLE: 5 FT. WIRE FENCE (DESIGN W-1) FOR PEDESTRIAN BRIDGES	DES:	DR:	FIG. 5-397.202
APPROVED: JANUARY 05, 2017 Kevin Westhoff STATE BRIDGE ENGINEER	NAME: LIC. NO.		CHK:	CHK:	APPROVED:
			SHEET NO. OF SHEETS		BRIDGE NO.

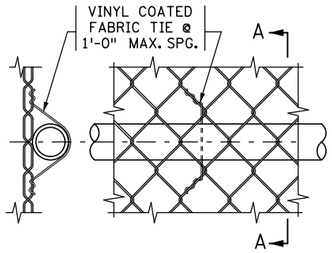

SECTION A-A PARTIAL ELEVATION

FABRIC TIE

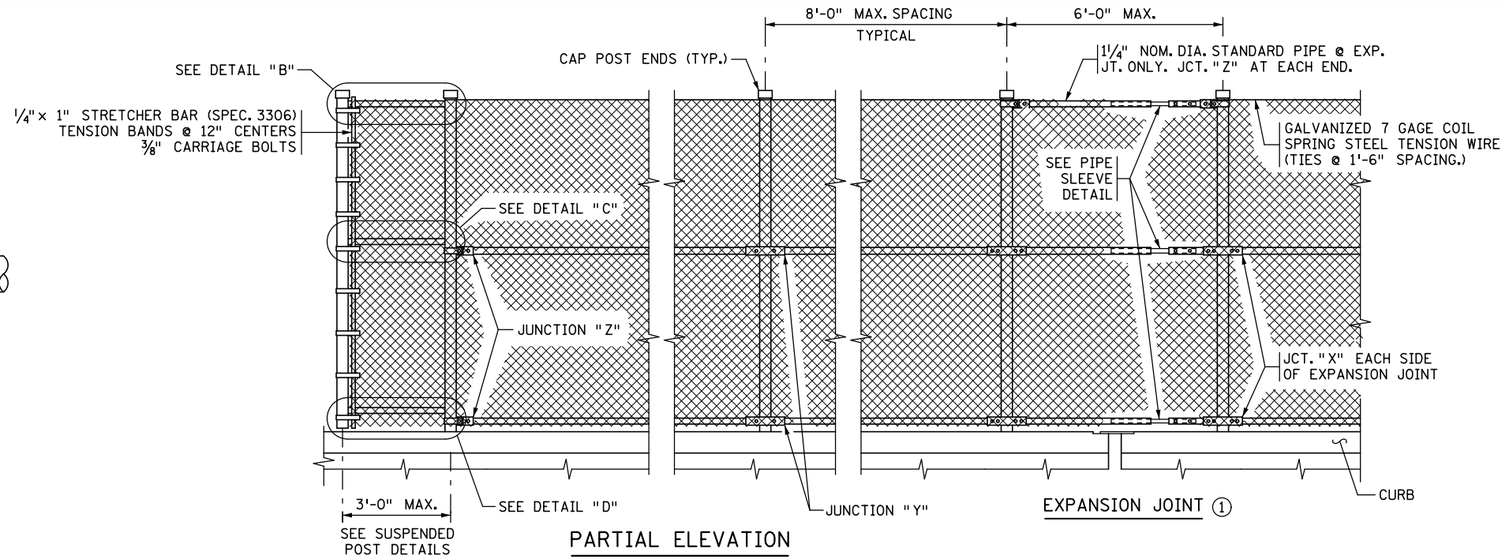

EXPANSION JOINT ①

PARTIAL ELEVATION

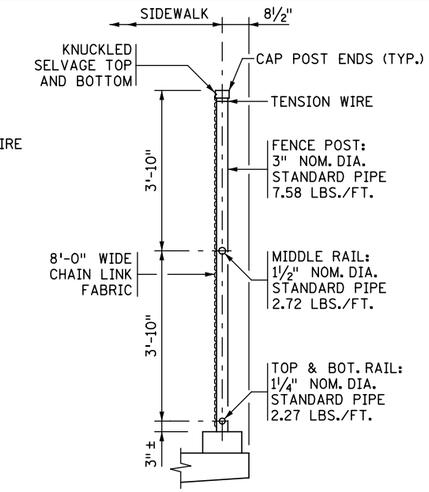

TYPICAL SECTION THRU FENCE

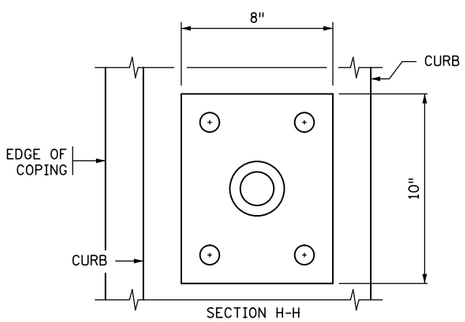

SECTION H-H
(BOLTS NOT SHOWN)

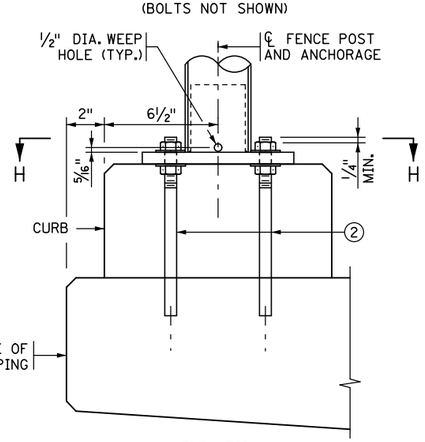

ELEVATION

BOLT ANCHORAGE FOR FENCE POSTS

FOR SLAB THICKNESS OF 7" (MIN.)

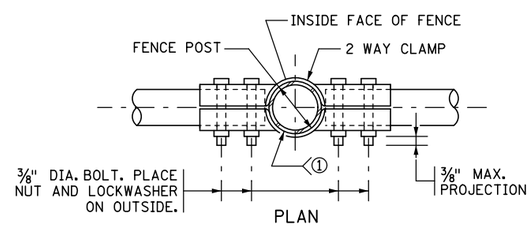

PLAN

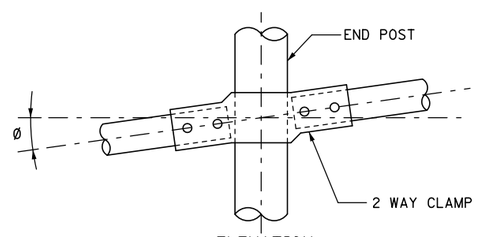

ELEVATION

JUNCTION "X"

2 WAY CLAMP BENDING TABLE	
GRADE OF FENCE	Ø
0° TO 2°	0°
2° TO 6°	4°
6° TO 10°	8°

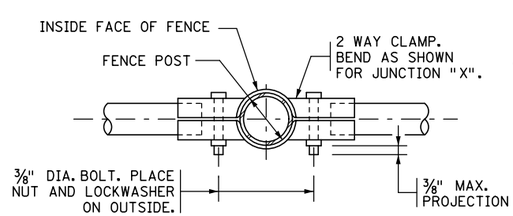

JUNCTION "Y"

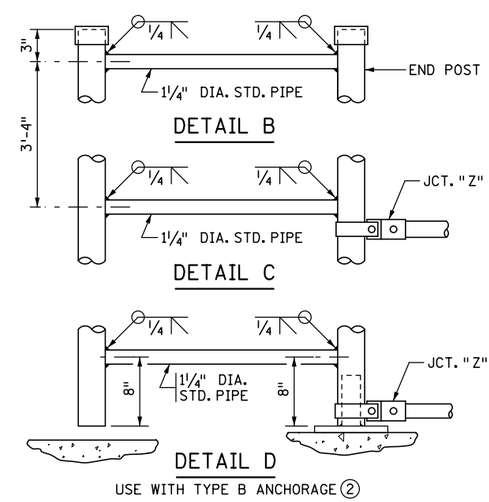

DETAIL B

DETAIL C

DETAIL D

USE WITH TYPE B ANCHORAGE ②

SUSPENDED POST DETAILS

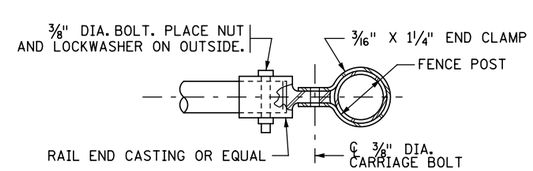

JUNCTION "Z"

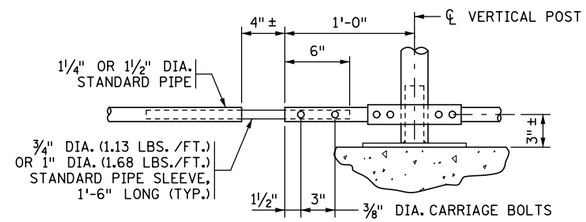

PIPE SLEEVE DETAIL ①

FOR 4" MAXIMUM BRIDGE EXPANSION

GENERAL NOTES

REFER TO SPEC. 2557 AND SPECIAL PROVISIONS FOR ADDITIONAL REQUIREMENTS AND BASIS OF PAYMENT.

REFER TO CONCRETE CURB PLAN SHEET FOR CURB DETAILS AND REINFORCEMENT.

MEASURE THE LENGTH OF WIRE FENCE FOR PAYMENT BETWEEN THE CENTERS OF END RAILPOSTS.

CONTINUOUSLY GROUND ALL METAL FENCE; SEE THE SPECIAL PROVISIONS. REFER TO THE ELECTRICAL PLANS AND ELECTRICAL SPECIAL PROVISIONS FOR DETAILS REGARDING BONDING MULTIPLE ELECTRICAL GROUNDING SYSTEMS.

ALL PIPE DIAMETERS ARE NOMINAL.

MAX. SPACING FOR 3" STANDARD PIPE POSTS IS 8 FT.

INSTALL FENCE POSTS AND ANCHORAGES VERTICAL UNLESS OTHERWISE NOTED. FOR POST SPACING, LOCATION, ANCHORAGE TYPE AND OTHER DETAILS SEE PLAN SHEET NO. ____.

INSTALL ALL POSTS WITH A MEANS TO SECURELY HOLD THE TOP TENSION WIRE IN POSITION AND ALLOW FOR THE REMOVAL AND REPLACEMENT OF A POST WITHOUT DAMAGING THE TOP TENSION WIRE.

PROVIDE WIRE TIES WITH 9 GA. (0.148" CORE) ALUMINUM PER ASTM B 211, ALLOY 1100 H18 WITH VINYL COATING (6 GA. AFTER COATING) OR 10 GA. (0.135" CORE) STEEL CL. 3 GALV. WIRE WITH FUSION BONDED VINYL COATING (9 GA. AFTER COATING). USE SAME VINYL THICKNESS COATING REQUIREMENTS AS VINYL COATED FABRIC.

USE 12 GA. GALVANIZED STEEL OR 9 GA. ALUMINUM ALLOY 1350-H19 HOG RINGS FOR TENSION WIRE TIES.

① PROVIDE PIPE SLEEVE IN SPAN BETWEEN THE VERTICAL FENCE POSTS AT EXPANSION JOINT. SEE SUPERSTRUCTURE SHEETS FOR EXP. JOINT LOCATION.

② FURNISH AND INSTALL TYPE B FENCE POST ANCHORAGES PER B906 FENCE POST ANCHORAGE PLAN SHEET.

REVISION:

APPROVED: JANUARY 05, 2017
Kevin Western
STATE BRIDGE ENGINEER

CERTIFIED BY _____ LICENSED PROFESSIONAL ENGINEER _____ DATE
NAME: LIC. NO.

TITLE: 8 FT. WIRE FENCE FOR PEDESTRIAN WALKS

DES: DR: CHK: CHK:

SHEET NO. OF SHEETS

FIG. 5-397.205

APPROVED:

BRIDGE NO.

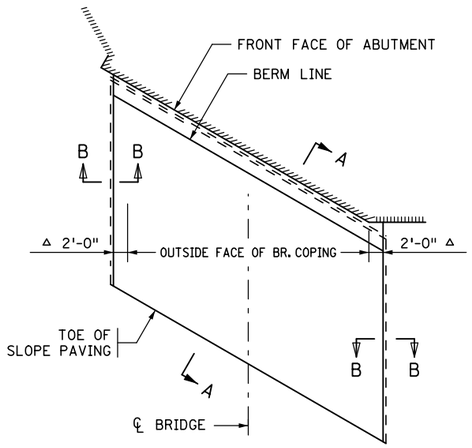

LAYOUT FOR SLOPES 1:2 OR FLATTER

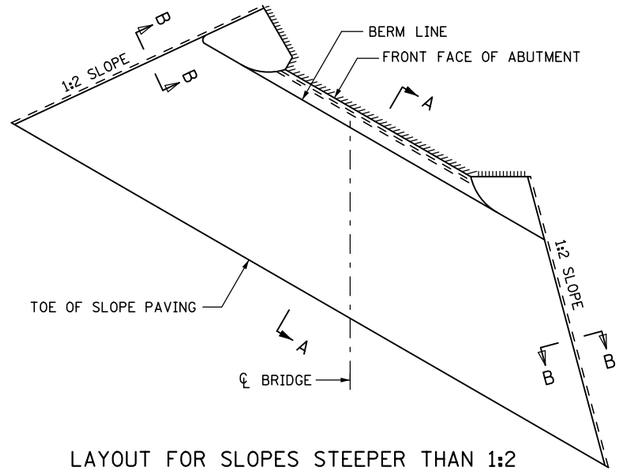

LAYOUT FOR SLOPES STEEPER THAN 1:2

△ 2'-0" FOR TANGENT BRIDGE SUPERSTRUCTURES. VARIES 2'-0" MINIMUM FOR CURVED BRIDGE SUPERSTRUCTURES.

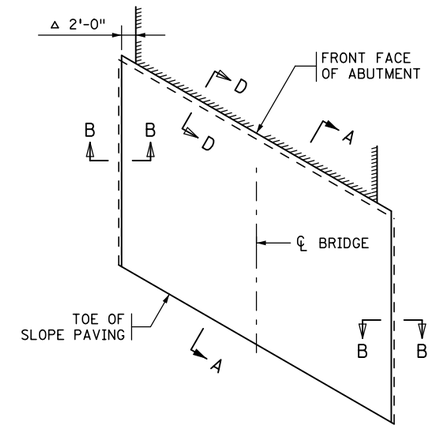

LAYOUT FOR SLOPES AT HIGH ABUTMENTS

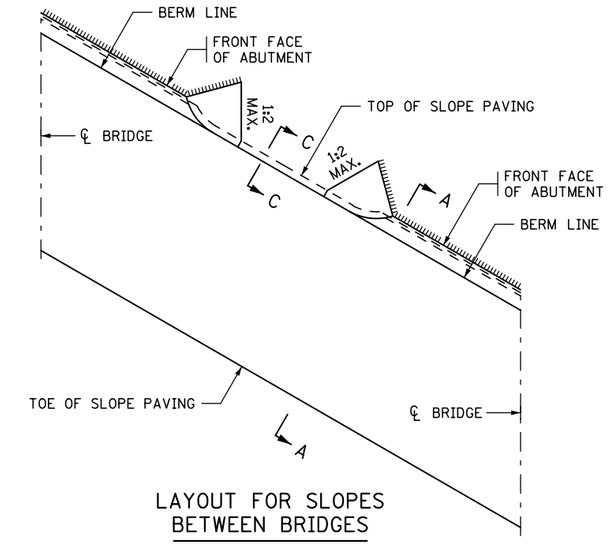

LAYOUT FOR SLOPES BETWEEN BRIDGES

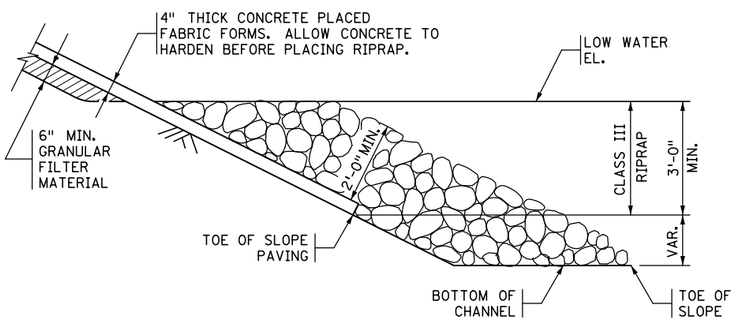

DETAIL "F"

(TOE OF SLOPE PAVING FOR WET CONDITIONS)

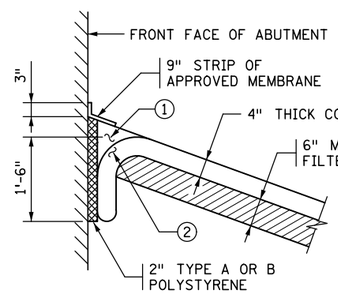

SECTION D-D

(HIGH ABUTMENT)

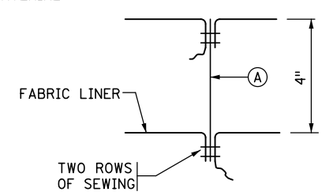

GROUT STOP DETAIL

(A) GROUT STOP TO BE PLACED BETWEEN EVERY THIRD SEAM, 17 FT. ± SPG

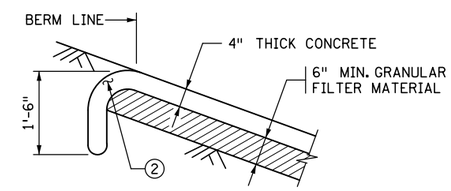

SECTION C-C

GENERAL NOTES

LIMITS OF FABRIC-FORMED SLOPE PAVING SHOWN ARE APPROXIMATE. EXACT LIMITS TO BE DETERMINED BY THE ENGINEER IN THE FIELD.

SEE SPECIAL PROVISIONS FOR MATERIALS, PREPARATION, PLACEMENT, AND PAYMENT.

GRANULAR FILTER MATERIAL PER SPEC. 3601.

SEAMS OF THE FABRIC LINER TO BE PLACED UP THE SLOPE IN A VERTICAL DIRECTION.

SLOPES ARE EXPRESSED AS A RATIO OF VERTICAL DISTANCE : HORIZONTAL DISTANCE.

(1) FILL RECESS WITH CONCRETE PER SPEC. 2514. SLOPE AND COMPACT TO FORM A SMOOTH SURFACE.

(2) PLACE CONCRETE IN CURVED PORTION OF FABRIC PRIOR TO PLACING CONCRETE IN OTHER AREAS.

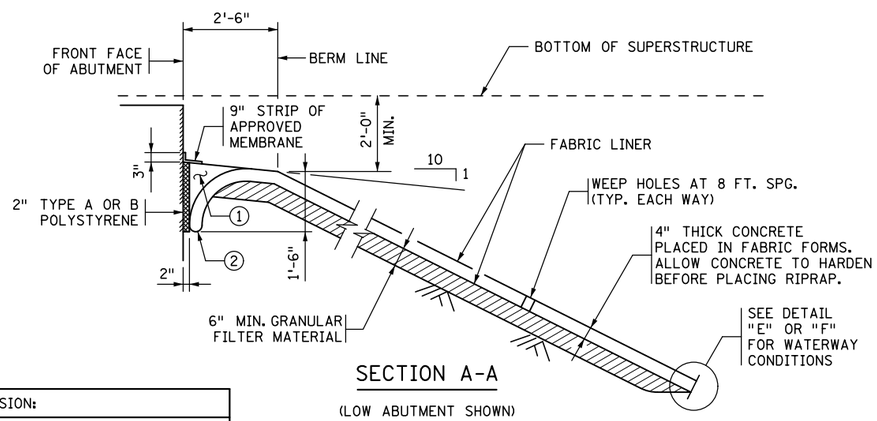

SECTION A-A

(LOW ABUTMENT SHOWN)

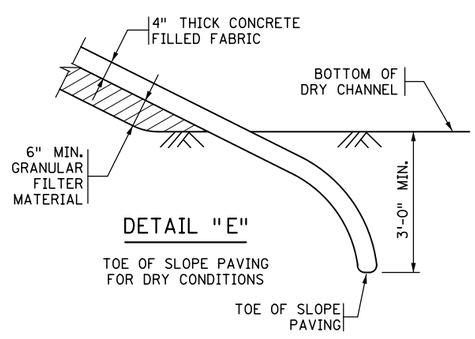

DETAIL "E"

TOE OF SLOPE PAVING FOR DRY CONDITIONS

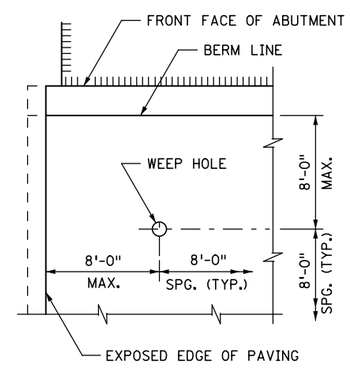

WEEP HOLE DETAIL
PLAN VIEW

(ALL SLOPES AND ABUTMENTS)

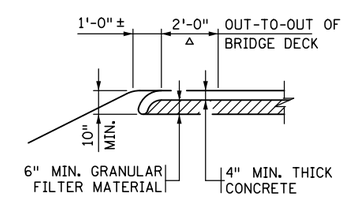

SECTION B-B

REVISION:			FIG. 5-397.300
APPROVED: JANUARY 05, 2017 STATE BRIDGE ENGINEER	CERTIFIED BY ____ LICENSED PROFESSIONAL ENGINEER ____ DATE NAME: LIC. NO.	TITLE: GROUTED INJECTED FABRIC FORMED SLOPE PAVING	DES: DR: CHK: CHK: APPROVED: MODIFIED SHEET NO. OF SHEETS	BRIDGE NO.

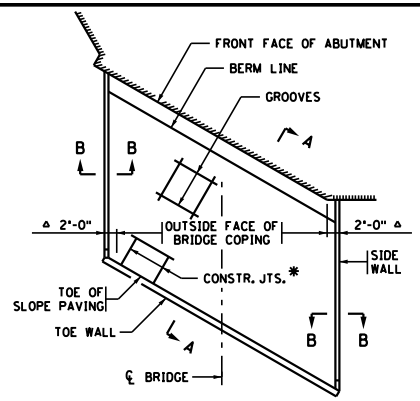

LAYOUT FOR SLOPES 1:2 OR FLATTER

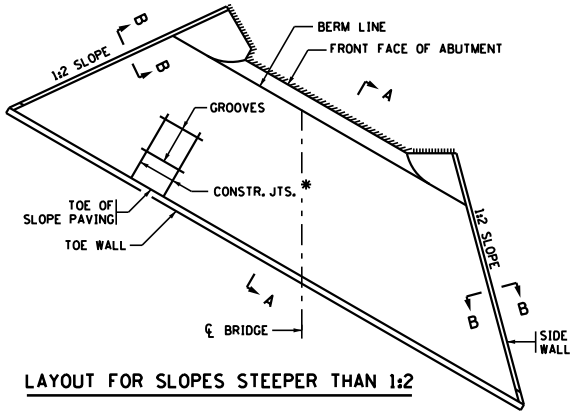

LAYOUT FOR SLOPES STEEPER THAN 1:2

△ 2'-0" FOR TANGENT BRIDGE SUPERSTRUCTURES. VARIES 2'-0" MINIMUM FOR CURVED BRIDGE SUPERSTRUCTURE.

* VERTICAL CONSTRUCTION JOINTS MAY BE CONSTRUCTED PARALLEL TO ℄ OF BRIDGE FOR SKEWS TO 10° ONLY.

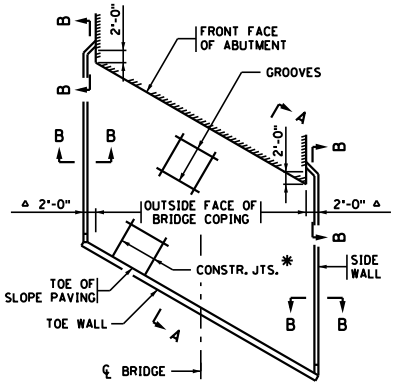

LAYOUT FOR SLOPES AT ABUTMENTS WITH 8' OR GREATER EXPOSURE

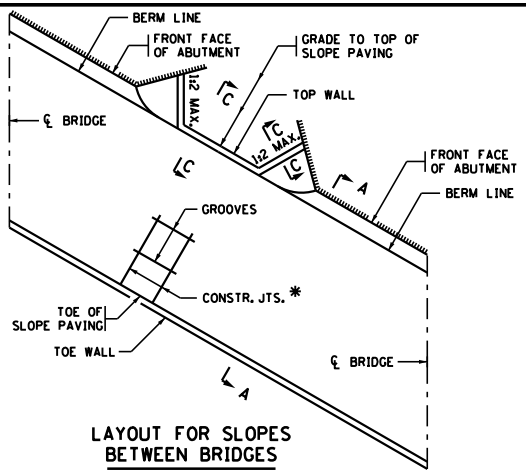

LAYOUT FOR SLOPES BETWEEN BRIDGES

TEXT IN ITALICS ARE DESIGNER NOTES. REMOVE PRIOR TO PLOTTING FINAL PLAN.

FOR INTEGRAL OR SEMI-INTEGRAL ABUTMENTS WITH RUSTICATION, MODIFY THE POLYSTYRENE THICKNESS IN DETAIL "A" TO 2".

FOR SLOPES OF 1:6 OR FLATTER THE TOE WALL AND SIDE WALLS SHOULD BE FLUSH WITH THE TOP OF THE SLOPE PAVING IMMEDIATELY ADJACENT TO ROADWAY SHOULDER TO PREVENT DAMAGE FROM SNOW PLOWS. VERIFY WITH MAINTENANCE PERSONNEL.

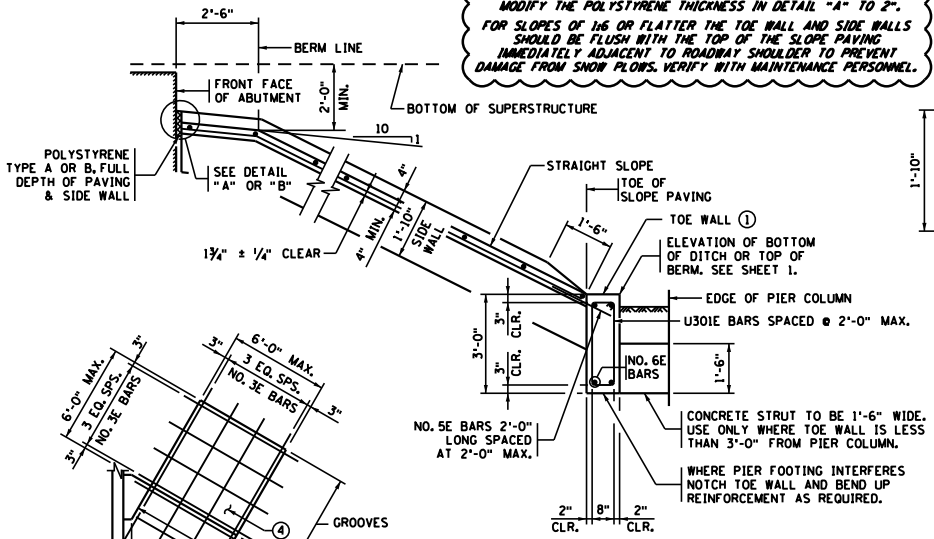

SECTION A-A

1:2 SLOPE SHOWN

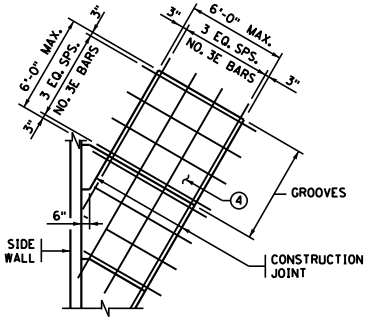

PAVING DETAIL

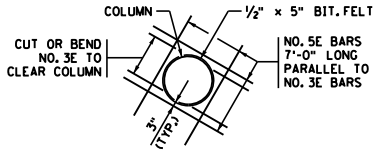

DETAIL WHERE PIER COLUMN EXTENDS THROUGH SLOPE PAVING

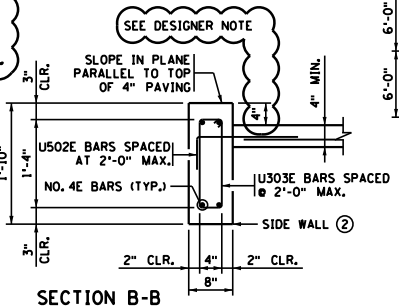

SECTION B-B

NORMAL TO SLOPE

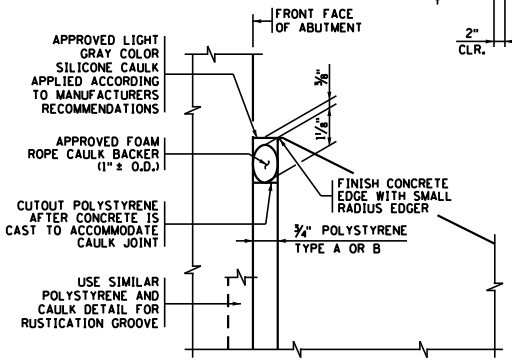

DETAIL "A"

ABUTMENTS WITH RUSTICATION

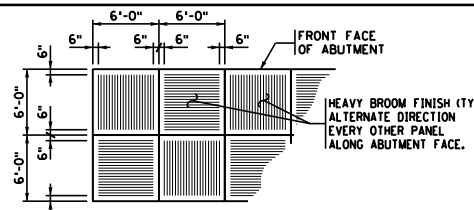

BROOMED SURFACE TREATMENT

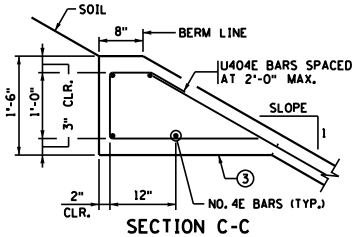

SECTION C-C

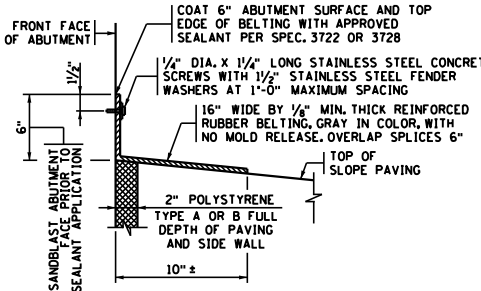

DETAIL "B"

ABUTMENTS WITHOUT RUSTICATION

CONCRETE & REINFORCEMENT UNIT QUANTITIES

① 0.111 CU. YD. OF CONCRETE/LIN. FT.
8.55 LBS. OF REINFORCEMENT/LIN FT.

② 0.046 CU. YD. OF CONCRETE/LIN. FT.
4.08 LBS. OF REINFORCEMENT/LIN FT.

③ 0.116 CU. YD. OF CONCRETE/LIN. FT.
5.62 LBS. OF REINFORCEMENT/LIN FT.
BASED ON A SLOPE OF 1:2.

④ 0.111 CU. YD. OF CONCRETE/SQ. YD.
4.512 LBS. OF REINFORCEMENT/SQ. YD.

GENERAL NOTE

SLOPES ARE EXPRESSED AS A RATIO OF VERTICAL DISTANCE: HORIZONTAL DISTANCE.

SLOPE PAVING PER SPEC. 2514.

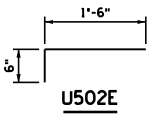

U502E

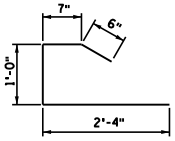

U404E

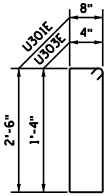

U301E & U303E

REVISION: 11-08-2018	CERTIFIED BY _____ LICENSED PROFESSIONAL ENGINEER _____ DATE	TITLE: CONCRETE SLOPE PAVING UNDER BRIDGES	FIG. 5-397.301
APPROVED: SEPTEMBER 26, 2003	NAME: LIC. NO.	DES: DR: CHK: CHK:	APPROVED: BRIDGE NO.
Daniel S. Hoerman STATE BRIDGE ENGINEER		SHEET NO. OF SHEETS	

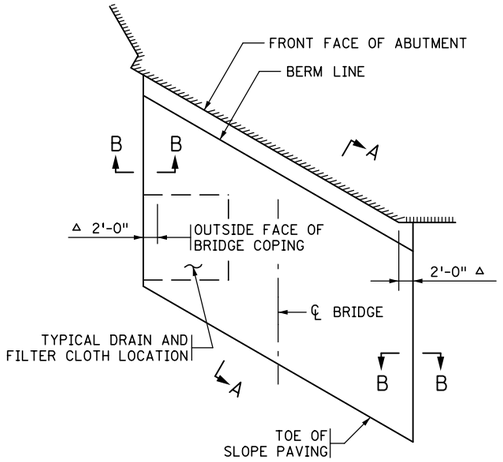

LAYOUT FOR SLOPES 1:2 OR FLATTER

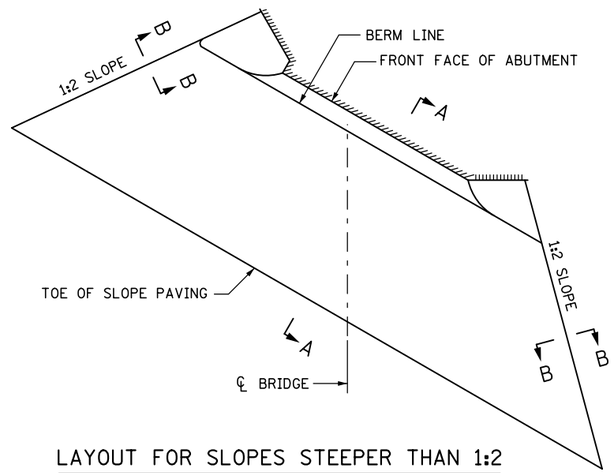

LAYOUT FOR SLOPES STEEPER THAN 1:2

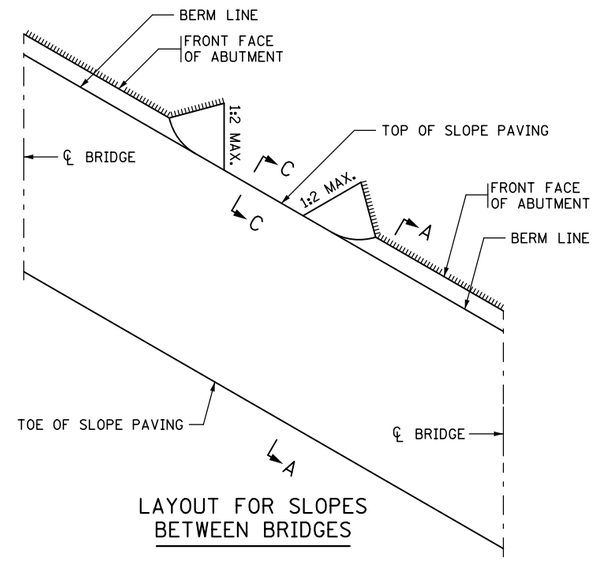

LAYOUT FOR SLOPES BETWEEN BRIDGES

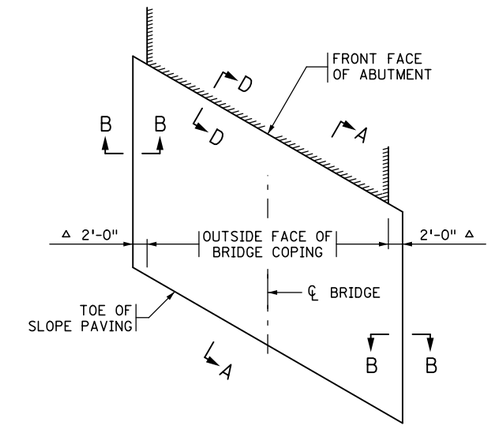

LAYOUT FOR SLOPES AT HIGH ABUTMENTS

△ 2'-0" FOR TANGENT BRIDGE SUPERSTRUCTURES. VARIES 2'-0" MINIMUM FOR CURVED BRIDGE SUPERSTRUCTURES.

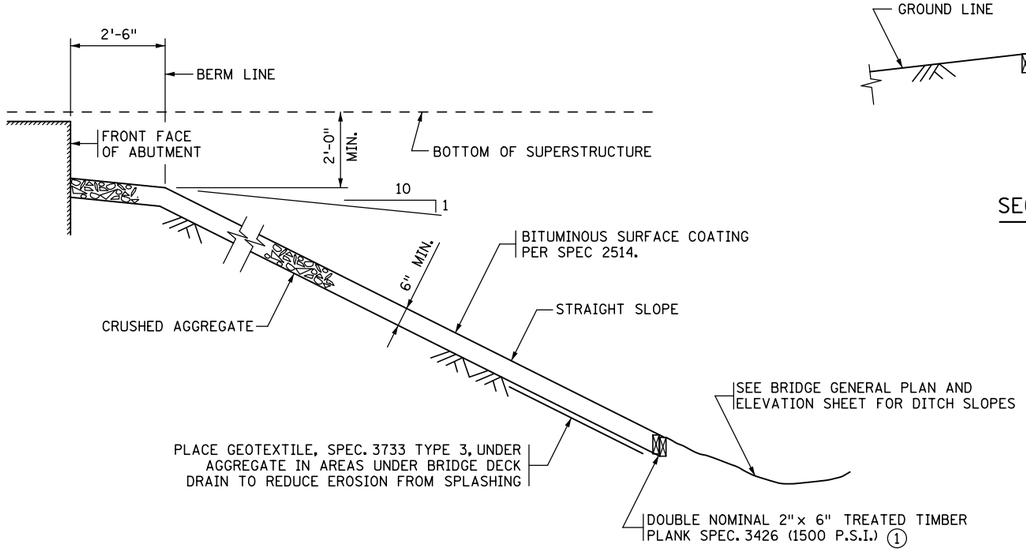

SECTION A-A

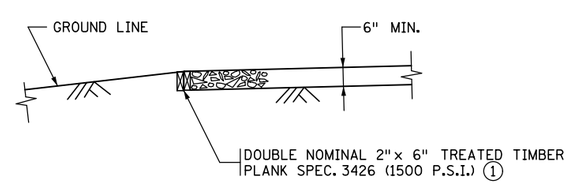

SECTION B-B

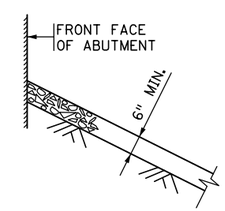

SECTION D-D

HIGH ABUTMENTS

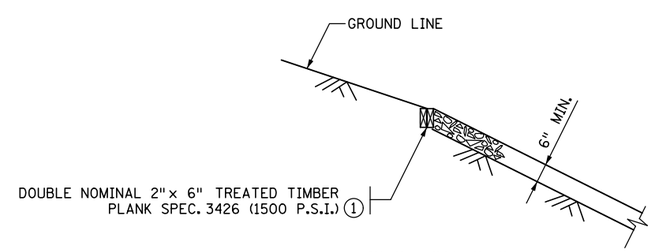

SECTION C-C

GENERAL NOTES

SLOPES ARE EXPRESSED AS A RATIO OF VERTICAL DISTANCE: HORIZONTAL DISTANCE.

REFER TO SPECIFICATION 2514 FOR ADDITIONAL INFORMATION.

1 PRESERVATIVE TREATMENT PER SPEC. 3491, TABLE 3491-1, PRODUCT AND USAGE CATEGORY E2, AWPA USE CATEGORY UC4B. REFER TO MNDOT APPROVED PRODUCTS LIST.

REVISION: 09-11-2014

APPROVED: SEPTEMBER 26, 2003

STATE BRIDGE ENGINEER

CERTIFIED BY _____ LICENSED PROFESSIONAL ENGINEER _____ DATE

NAME: LIC. NO.

TITLE: STABILIZED AGGREGATE SLOPE PAVING UNDER BRIDGES

DES: DR: CHK: CHK:

SHEET NO. OF SHEETS

APPROVED:

FIG. 5-397.302

BRIDGE NO.

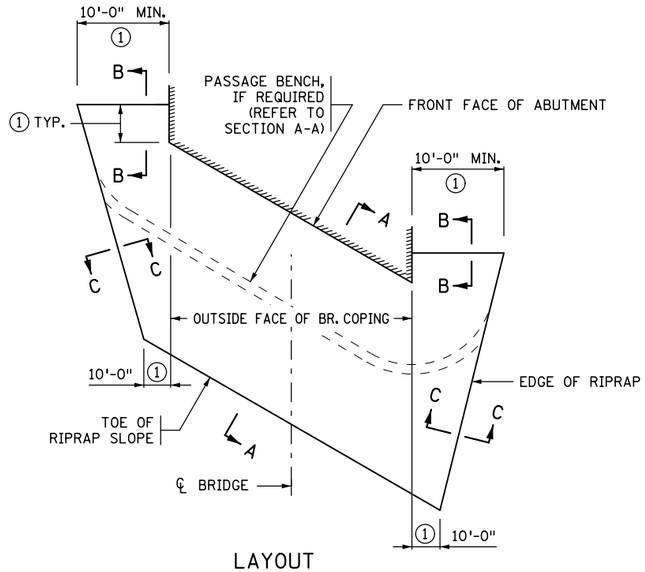

LAYOUT

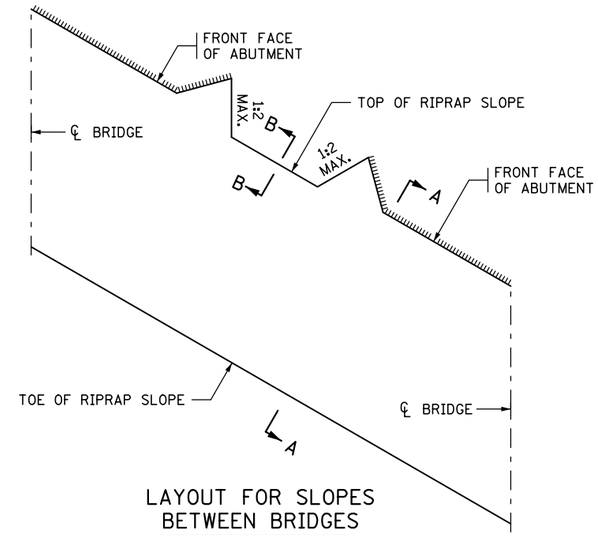

LAYOUT FOR SLOPES BETWEEN BRIDGES

GENERAL NOTES

GEOTEXTILE FILTER TYPE 7 PER SPEC. 3733, BY THE SQ. YD.

RIPRAP PER SPEC. 2511, RANDOM RIPRAP CLASS ___ BY THE CU. YD.

SLOPES ARE EXPRESSED AS A RATIO OF VERTICAL DISTANCE : HORIZONTAL DISTANCE.

SLOPE BOTTOM OF TRENCHES 1:20 PARALLEL TO ABUTMENT FACE TO PROVIDE POSITIVE DRAINAGE.

1. SEE PLAN SHEET NO.__ FOR DIMENSIONS, AND FOR ELEVATIONS OF RIPRAP TOE AND PASSAGE BENCHES.
2. PLACE RIPRAP STARTING FROM THE BOTTOM OF THE SLOPE. DO NOT PLACE RIP RAP IN TRENCH UNTIL RIPRAP HAS BEEN PLACED ON ENTIRE SLOPE BENEATH THE TRENCH.
3. OVERLAP GEOTEXTILE FILTER 2'-0" MINIMUM.
4. WRAP GEOTEXTILE FILTER AROUND TOE, OVERHANG BETWEEN 1ST AND 2ND LAYER OF RIPRAP. USE HAND PLACEMENT OR SIMILAR METHODS TO ESTABLISH PROFILE AND PLACE FABRIC IF UNDER WATER.
5. BURY EDGES OF GEOTEXTILE FILTER TO DIRECT WATER FLOW OVER THE FABRIC WITHOUT UNDERMINING.
6. OMIT THE TRENCH SHOWN IN DETAIL "D" AND THE 15'-0" MAXIMUM SPACING BETWEEN TRENCHES FOR SLOPES 1:3 OR FLATTER.
7. SURFACE BENCHES WITH AGGREGATE CLASS 5 (INCIDENTAL TO RIPRAP). TIE BENCHES TO NATURAL GROUNDLINES OUTSIDE OF BRIDGE.

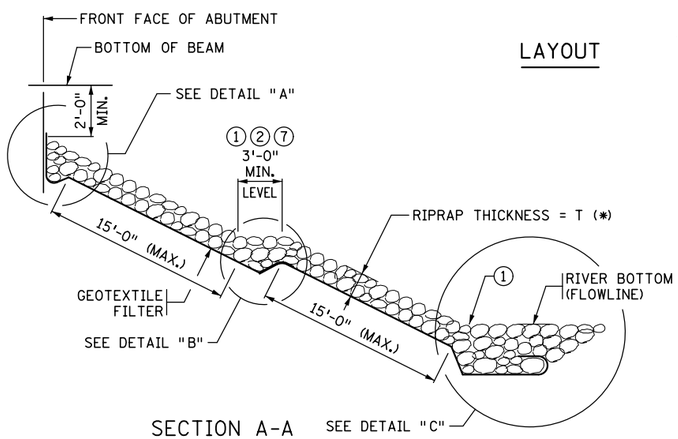

SECTION A-A
(WITH PASSAGE BENCH)

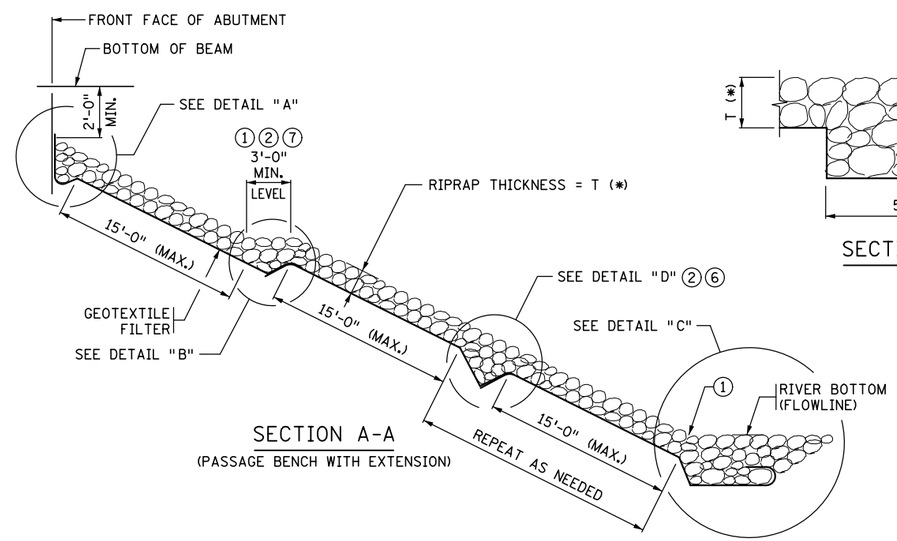

SECTION A-A
(PASSAGE BENCH WITH EXTENSION)

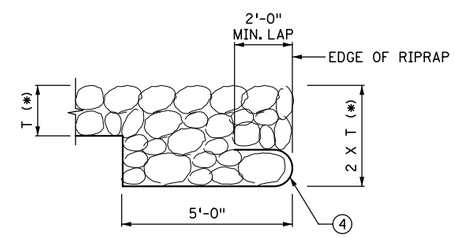

SECTION C-C

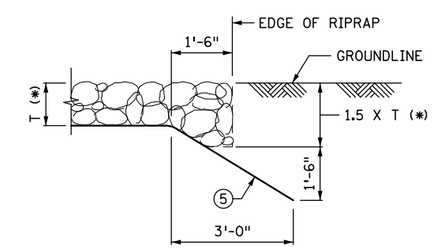

SECTION B-B

* DIMENSION T
CLASS III = 1'-6"
CLASS IV = 2'-0"
CLASS V = 2'-6"

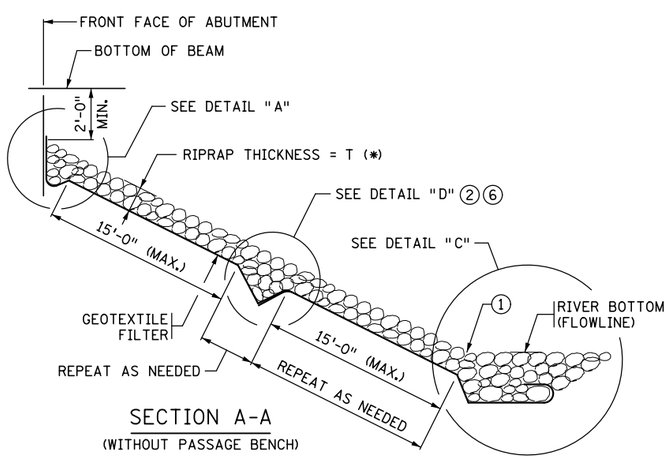

SECTION A-A
(WITHOUT PASSAGE BENCH)

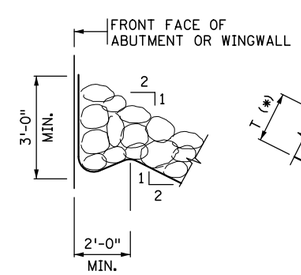

DETAIL "A"

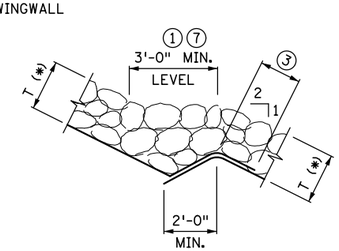

DETAIL "B"

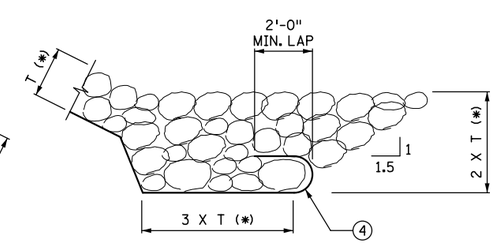

DETAIL "C"

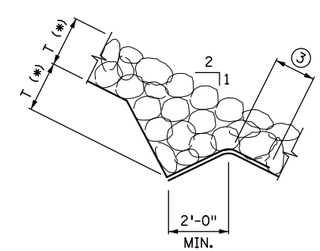

DETAIL "D"

REVISED: 01-05-2017

APPROVED: MAY 24, 2011
Nancy Daubenberger
STATE BRIDGE ENGINEER

CERTIFIED BY _____ LICENSED PROFESSIONAL ENGINEER _____ DATE
NAME: LIC. NO.

TITLE: RIPRAP SLOPE WITH GEOTEXTILE FILTER (SLOPES 1:2 AND FLATTER)

DES:	DR:
CHK:	CHK:

SHEET NO. OF SHEETS

FIG. 5-397.309

APPROVED:

BRIDGE NO.

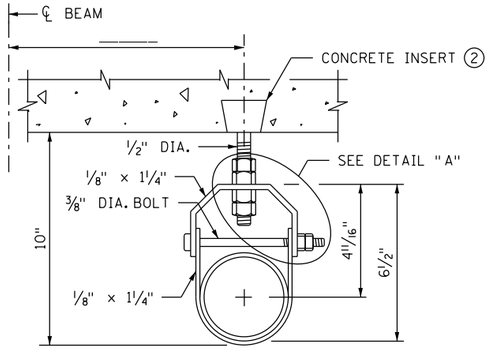

CONDUIT HANGER DETAIL

(FOR ____ CONDUIT SYSTEM)

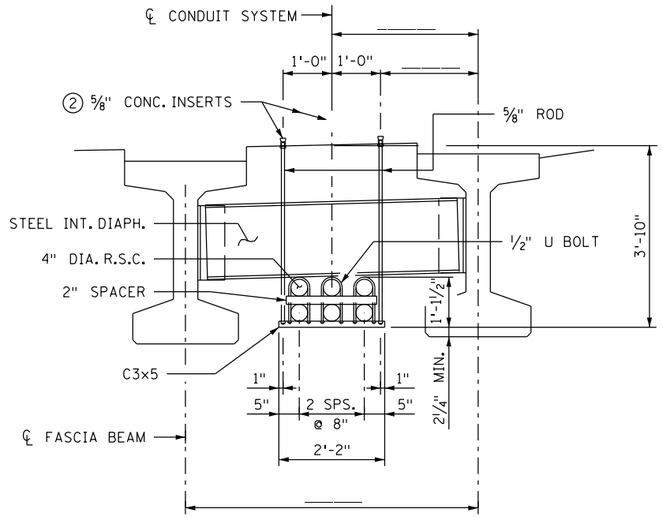

TRANSVERSE SECTION

(FOR ____ CONDUIT SYSTEM)

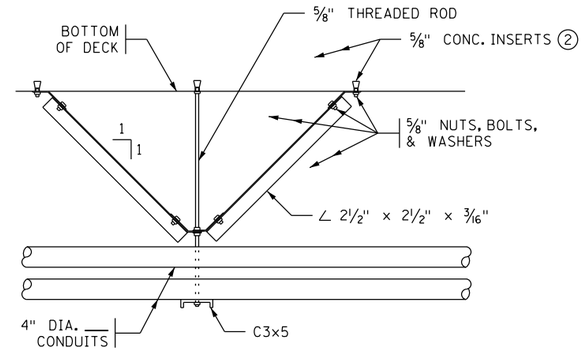

CENTERING DEVICE DETAIL - SIDE VIEW

(LOCATED ONLY ON A HANGER ADJACENT TO PIER)

SUMMARY OF QUANTITIES FOR CONDUIT SYSTEM (_____)

PRECAST HAND HOLES (STD. PLATE 8117)	____	UNITS
HANGER ASSEMBLY	____	UNITS
_" X _" CAST IRON JCT. BOX & SUPPORTS	____	UNITS
CONDUIT CAP	____	UNITS
DRAINAGE TEE	____	UNITS
COMBINATION EXPANSION/DEFLECTION FITTING	____	UNITS
_" RIGID STEEL CONDUIT	____	LIN. FT.
① _" PIPE SLEEVE	____	UNITS

ALL MATERIAL LISTED ABOVE IS INCLUDED IN PRICE BID FOR "CONDUIT SYSTEM (____)".

① SEE ABUTMENT SHEETS FOR LOCATION AND DETAILS.

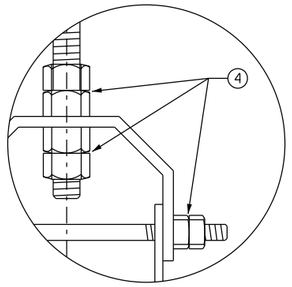

DETAIL "A"

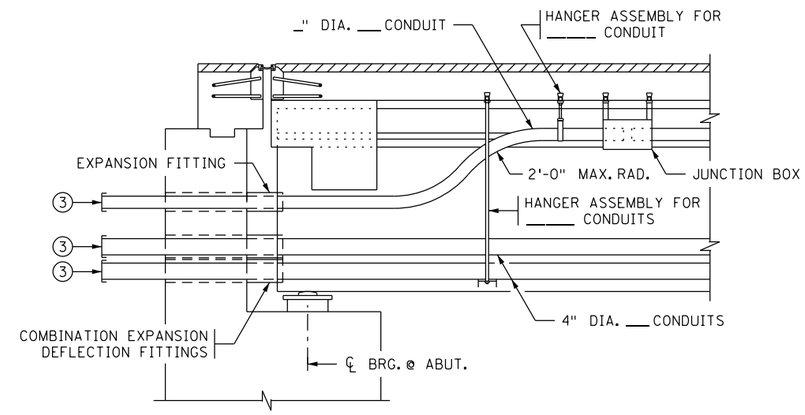

LONGITUDINAL SECTION

(FOR ____ CONDUIT SYSTEM)

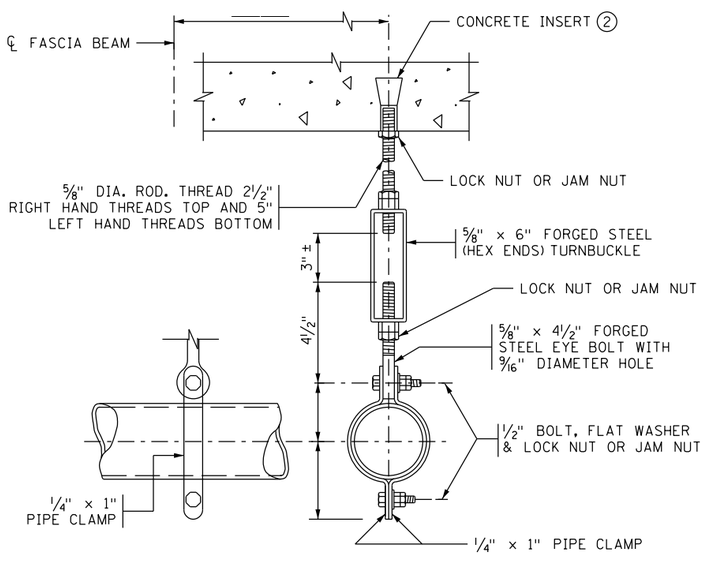

HANGER ASSEMBLY

EACH HANGER ASSEMBLY SHALL CONSIST OF CONCRETE INSERT, ⅝" DIA. ROD, PIPE CLAMPS, NUTS, BOLTS, WASHERS, TURNBUCKLE AND EYE BOLT

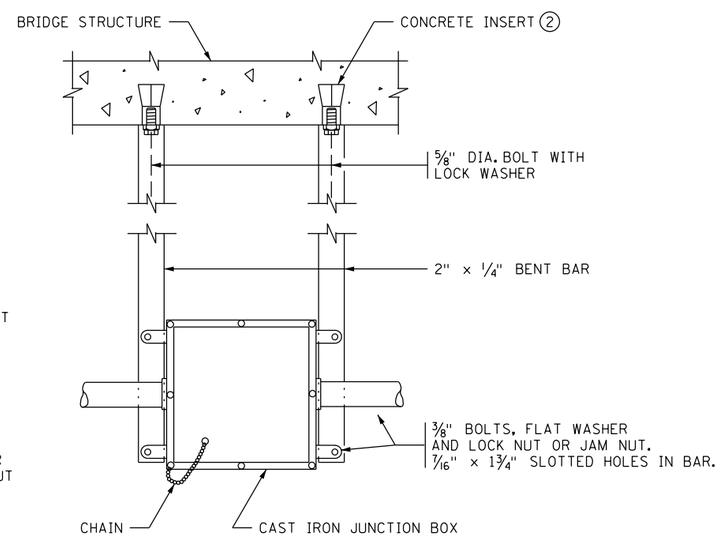

JUNCTION BOX DETAILS

GENERAL NOTES

RODS, EYE BOLTS AND PIPE CLAMPS SHALL COMPLY WITH SPEC. 3313, TYPE I.

TURNBUCKLES AND EYE BOLTS SHALL COMPLY WITH A.S.T.M. A235 CLASS A MINIMUM REQUIREMENTS.

FLAT BARS AND ANCHORAGES SHALL COMPLY WITH SPEC. 3306.

CONCRETE INSERTS SHALL BE APPROVED TYPE MALLEABLE IRON. MATERIAL AS PER SPEC. 3324, GRADE 35018. TAP AFTER GALVANIZING.

GALVANIZE BOLTS, NUTS, WASHERS, TURNBUCKLES, RODS, EYE BOLTS, AND INSERTS AS PER SPEC. 3392. GALVANIZE OTHER MATERIAL AS PER SPEC. 3394 AFTER FABRICATION.

PIPE SLEEVES SHALL COMPLY WITH SPEC. 3362.

② SPACE INSERTS AT 10'-0" MAXIMUM CENTERS.

③ CAP ENDS.

④ DOUBLE NUTS OR JAM NUTS OR LOCK NUT.

REVISION: 05-24-2012

APPROVED: SEPTEMBER 26, 2003

STATE BRIDGE ENGINEER

CERTIFIED BY _____ LICENSED PROFESSIONAL ENGINEER _____ DATE

NAME: _____ LIC. NO. _____

TITLE: CONDUIT SYSTEM FOR _____

DES: _____ DR: _____ CHK: _____ CHK: _____

SHEET NO. __ OF __ SHEETS

FIG. 5-397.402

APPROVED:

BRIDGE NO. _____

FILENAME: $$$$@FILENAME@$$$$
TIME : $@TIME@$
PLOTTED : $$$$@DATE@$$$$
PATH & FILENAME: $$$$@PATH\FILENAME@$$$$

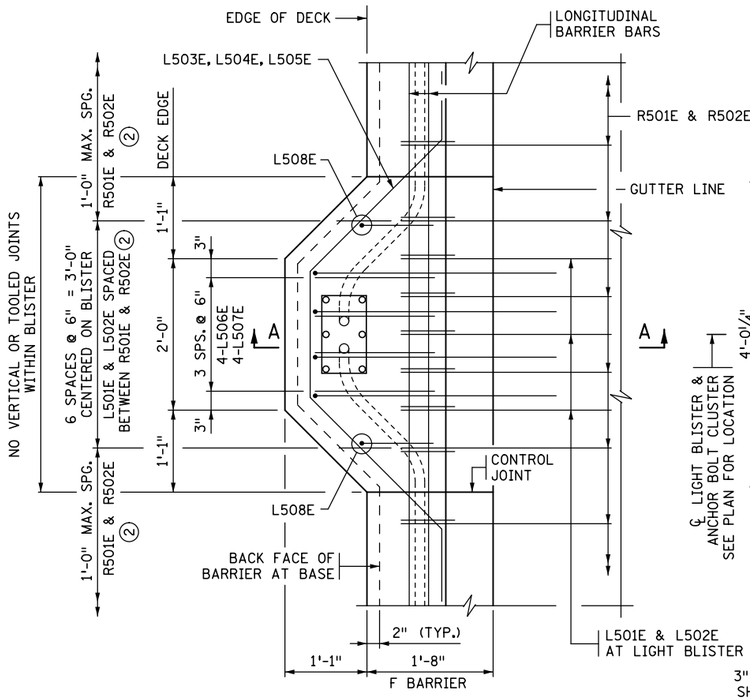

PLAN

LIGHT POLE ANCHORAGE ON TYPE F BARRIER ②

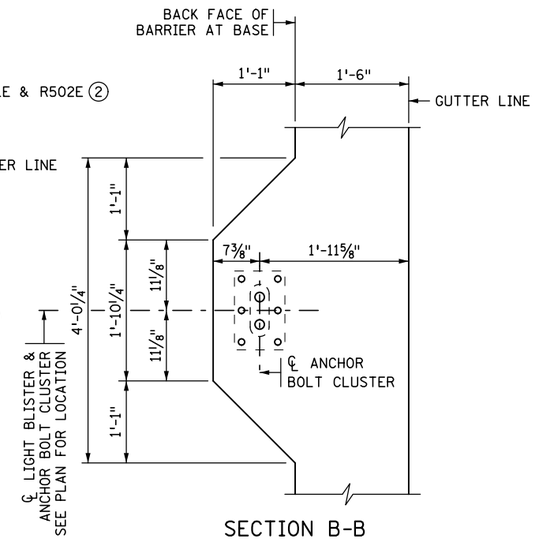

SECTION B-B

DECK NOT SHOWN FOR CLARITY

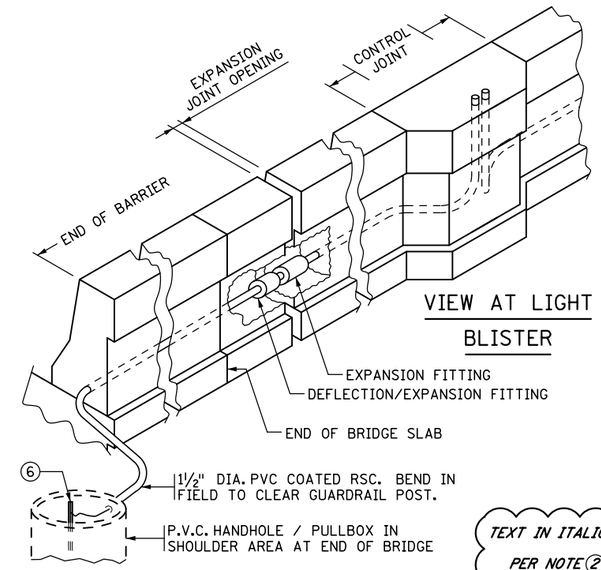

VIEW AT LIGHT BLISTER

VIEW AT END OF BRIDGE

APPROACH SLAB NOT SHOWN.
EXPANSION JOINT SHOWN.

GENERAL NOTES

BOND AND GROUND THE CONDUIT SYSTEM (LIGHTING) IN ACCORDANCE WITH THE APPLICABLE PORTIONS OF SPEC. 2545.3.R.

ADDITIONAL BARRIER AND DECK CONCRETE REQUIRED TO CONSTRUCT THE LIGHT POLE ANCHORAGE IS INCIDENTAL TO THE CONCRETE BARRIER AND DECK CONCRETE PAY ITEMS, RESPECTIVELY.

ANCHOR BOLT CLUSTER IS INCLUDED IN PRICE BID FOR "CONDUIT SYSTEM"

① EXTEND THE 1½" DIA. PVC COATED RIGID STEEL CONDUIT 3" ABOVE THE BARRIER AND INSTALL CAP.

② SEE CONCRETE BARRIER SHEETS FOR TYPICAL BARRIER REINFORCEMENT. WEIGHT OF REINFORCEMENT IS INCLUDED IN PRICE BID FOR "REINFORCEMENT BARS (EPOXY COATED)."

③ BARS SHOWN ARE FOR ONE LIGHT BLISTER.

④ WRAP PER SPEC. 2565.3.D.7.

⑤ PROVIDE COMBINATION DEFLECTION/EXPANSION FITTING PER SPEC. 3839.

⑥ PLACE GROUND ROD IN EACH HANDHOLE WITH EXOTHERMIC WELD FROM ROD TO WIRE.

TEXT IN ITALICS ARE DESIGNER NOTES. REMOVE PRIOR TO PLOTTING FINAL PLAN.

PER NOTE ②, BE SURE TO ADD THE WEIGHT OF ADDITIONAL REBAR TO THE REINFORCEMENT QUANTITY.

DON'T SHOW COMBINATION DEFLECTION/EXPANSION FITTING OR EXPANSION JOINT OPENING IN BARRIER FOR INTEGRAL OR SEMI-INTEGRAL ABUTMENT BRIDGES.

ADD THE FOLLOWING NOTE TO EACH OF THE CONCRETE BARRIER SHEETS IN THE PLAN.....REFER TO THE "CONDUIT SYSTEM SHEET" FOR DETAILS AND ADDITIONAL REINFORCING FOR LIGHT BLISTERS.

TEXT IN ITALICS ARE DESIGNER NOTES. REMOVE PRIOR TO PLOTTING FINAL PLAN.

INSERT THE REQUIRED LENGTH IN THE BILL OF REINFORCENENT FOR L501E AND L502E.
L501E WITH WEARING COURSE = 5'-3"
L501E WITHOUT WEARING COURSE = 5'-7"
L502E WITH WEARING COURSE = 6'-6"
L502E WITHOUT WEARING COURSE = 6'-2"

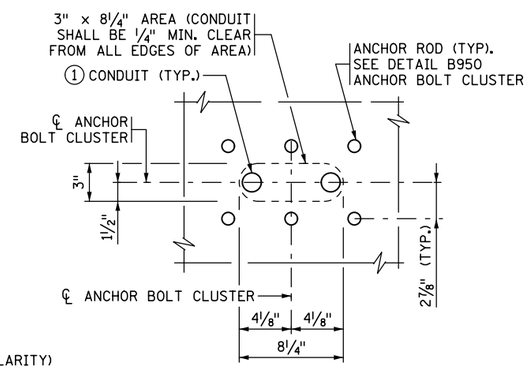

CONDUIT PLACEMENT DETAIL

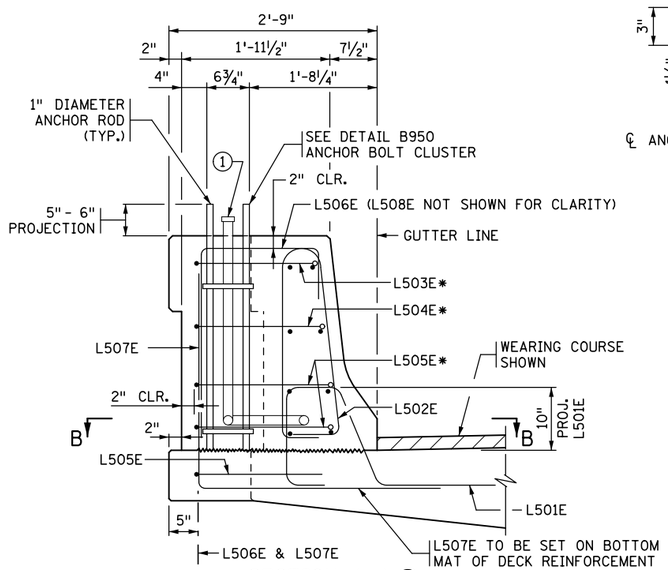

SECTION A-A ②

* L503E, L504E, L505E ARE SPACED WITH BARRIER LONGITUDINAL REINFORCEMENT. SEE CONCRETE BARRIER SHEET FOR SPACING.

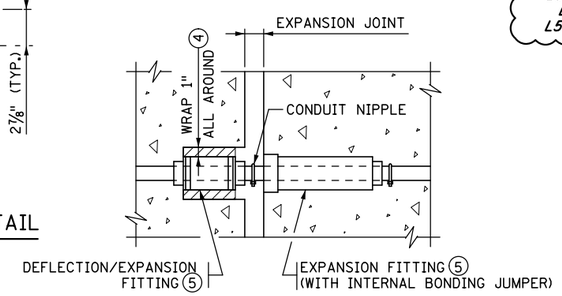

COMBINATION DEFLECTION/EXPANSION FITTING

IN BARRIER / SIDEWALK / CAST IN DECK

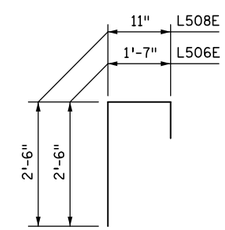

L506E, L508E

BILL OF REINFORCEMENT FOR BARRIER AT ONE LIGHT POLE ③

BAR	NO.	LENGTH	SHAPE	LOCATION
L501E	3			BARRIER DOWEL
L502E	3			BARRIER VERTICAL
L503E	1	9'-2"		LONGITUDINAL TIE
L504E	1	9'-4"		LONGITUDINAL TIE
L505E	3	9'-6"		LONGITUDINAL TIE
L506E	4	4'-11"		VERTICAL TIE
L507E	4	6'-0"		VERTICAL DOWEL
L508E	2	4'-3"		VERTICAL TIE

TOTAL REINFORCEMENT PER LIGHT POLE LOCATION IS 143 LBS.

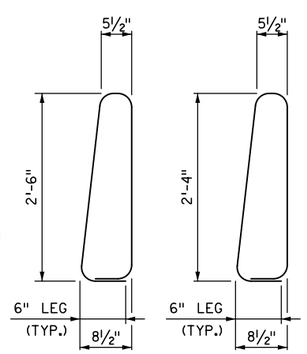

L502E WITH WEARING COURSE

L502E WITHOUT WEARING COURSE

TEXT IN ITALICS ARE DESIGNER NOTES. REMOVE PRIOR TO PLOTTING FINAL PLAN.

STRIKE OUT THE OPTION NOT USED ON L501E & L502E SHAPE.

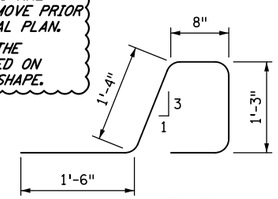

L501E WITH WEARING COURSE

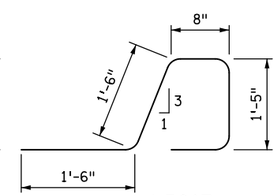

L501E WITHOUT WEARING COURSE

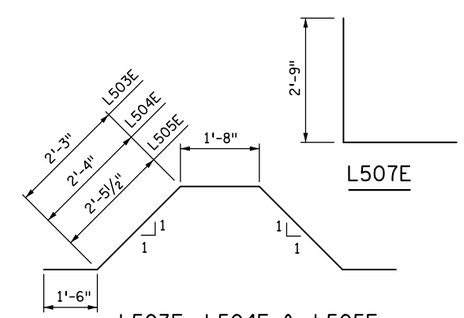

L503E, L504E & L505E

REVISED:

APPROVED: AUGUST 24, 2016
Kevin Western
STATE BRIDGE ENGINEER

CERTIFIED BY _____ LICENSED PROFESSIONAL ENGINEER _____ DATE

NAME: LIC. NO.

TITLE: CONDUIT SYSTEM (LIGHTING)
TYPE F CONCRETE BARRIER BLISTER, WITH OR WITHOUT WEARING COURSE

DES: DR: CHK: CHK:

SHEET NO. OF SHEETS

FIG. 5-397.406(A)

APPROVED:

BRIDGE NO.

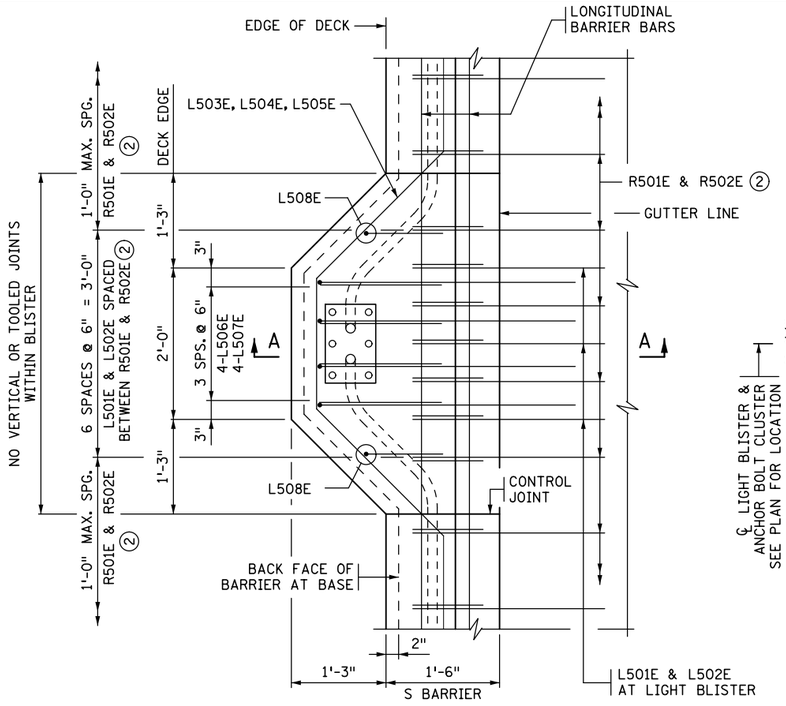

PLAN

LIGHT POLE ANCHORAGE ON TYPE S BARRIER ②

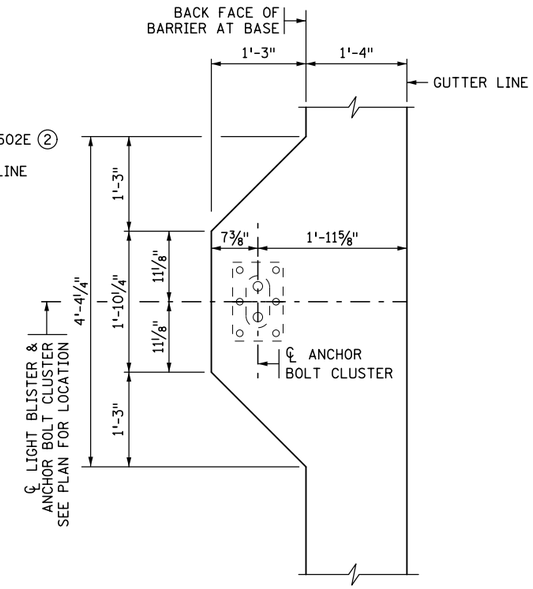

SECTION B-B

DECK NOT SHOWN FOR CLARITY

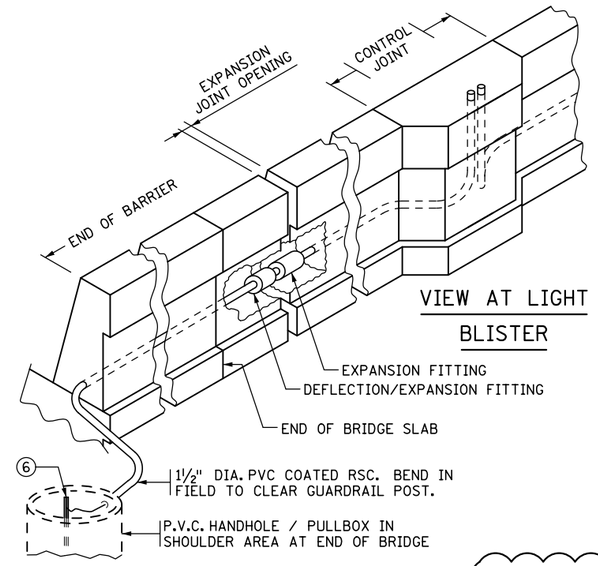

VIEW AT LIGHT BLISTER

VIEW AT END OF BRIDGE

APPROACH SLAB NOT SHOWN.
EXPANSION JOINT SHOWN.

GENERAL NOTES

BOND AND GROUND THE CONDUIT SYSTEM (LIGHTING) IN ACCORDANCE WITH THE APPLICABLE PORTIONS OF SPEC. 2545.3.R.

ADDITIONAL BARRIER AND DECK CONCRETE REQUIRED TO CONSTRUCT THE LIGHT POLE ANCHORAGE IS INCIDENTAL TO THE CONCRETE BARRIER AND DECK CONCRETE PAY ITEMS, RESPECTIVELY.

ANCHOR BOLT CLUSTER IS INCLUDED IN PRICE BID FOR "CONDUIT SYSTEM"

① EXTEND THE 1½" DIA. PVC COATED RIGID STEEL CONDUIT 3" ABOVE THE BARRIER AND INSTALL CAP.

② SEE CONCRETE BARRIER SHEETS FOR TYPICAL BARRIER REINFORCEMENT. WEIGHT OF REINFORCEMENT IS INCLUDED IN PRICE BID FOR "REINFORCEMENT BARS (EPOXY COATED)."

③ BARS SHOWN ARE FOR ONE LIGHT BLISTER.

④ WRAP PER SPEC. 2565.3.D.7.

⑤ PROVIDE COMBINATION DEFLECTION/EXPANSION FITTING PER SPEC. 3839.

⑥ PLACE GROUND ROD IN EACH HANDHOLE WITH EXOTHERMIC WELD FROM ROD TO WIRE.

TEXT IN ITALICS ARE DESIGNER NOTES. REMOVE PRIOR TO PLOTTING FINAL PLAN.

PER NOTE ②, BE SURE TO ADD THE WEIGHT OF ADDITIONAL REBAR TO THE REINFORCEMENT QUANTITY.

DON'T SHOW COMBINATION DEFLECTION/EXPANSION FITTING OR EXPANSION JOINT OPENING IN BARRIER FOR INTEGRAL OR SEMI-INTEGRAL ABUTMENT BRIDGES.

ADD THE FOLLOWING NOTE TO EACH OF THE CONCRETE BARRIER SHEETS IN THE PLAN.....REFER TO THE "CONDUIT SYSTEM SHEET" FOR DETAILS AND ADDITIONAL REINFORCING FOR LIGHT BLISTERS.

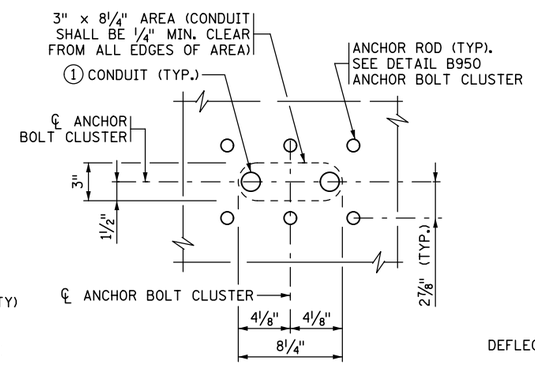

CONDUIT PLACEMENT DETAIL

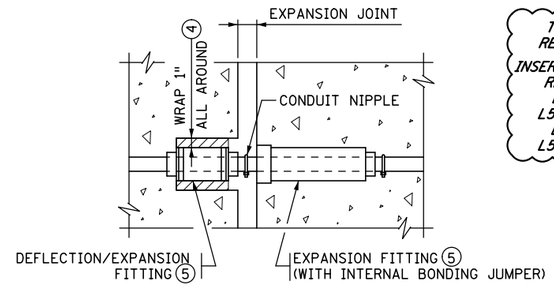

COMBINATION DEFLECTION/EXPANSION FITTING

IN BARRIER / SIDEWALK / CAST IN DECK

TEXT IN ITALICS ARE DESIGNER NOTES. REMOVE PRIOR TO PLOTTING FINAL PLAN.

INSERT THE REQUIRED LENGTH IN THE BILL OF REINFORCENENT FOR L501E AND L502E.
L501E WITH WEARING COURSE = 5'-4"
L501E WITH WEARING COURSE = 5'-7"
L502E WITH WEARING COURSE = 7'-5"
L502E WITH WEARING COURSE = 7'-1"

BILL OF REINFORCEMENT FOR BARRIER AT ONE LIGHT POLE ③

BAR	NO.	LENGTH	SHAPE	LOCATION
L501E	3			BARRIER DOWEL
L502E	3			BARRIER VERTICAL
L503E	1	9'-2"		LONGITUDINAL TIE
L504E	1	9'-8"		LONGITUDINAL TIE
L505E	3	10'-2"		LONGITUDINAL TIE
L506E	4	5'-2"		VERTICAL TIE
L507E	4	6'-8"		VERTICAL DOWEL
L508E	2	4'-4"		VERTICAL TIE

TOTAL REINFORCEMENT PER LIGHT POLE LOCATION IS 150 LBS.

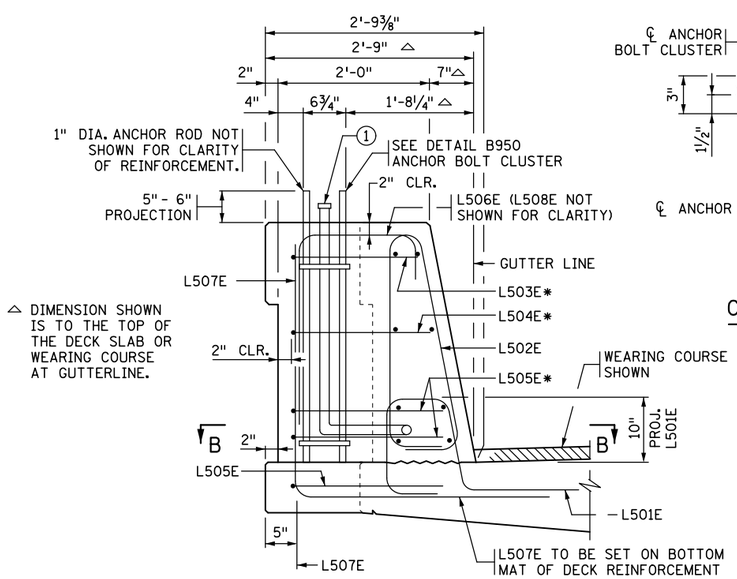

SECTION A-A ②

* L503E, L504E, L505E ARE SPACED WITH BARRIER LONGITUDINAL REINFORCEMENT. SEE CONCRETE BARRIER SHEET FOR SPACING.

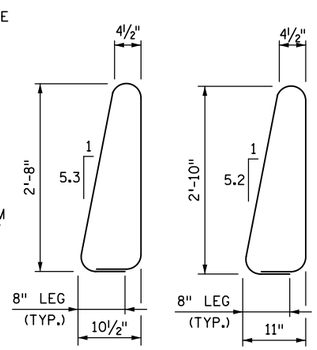

L502E
WITHOUT WEARING COURSE

L502E
WITH WEARING COURSE

TEXT IN ITALICS ARE DESIGNER NOTES. REMOVE PRIOR TO PLOTTING FINAL PLAN.

STRIKE OUT THE OPTION NOT USED ON L501E & L502E SHAPE.

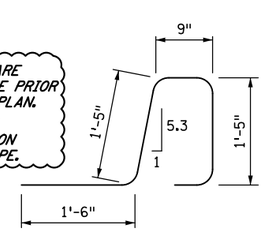

L501E
WITHOUT WEARING COURSE

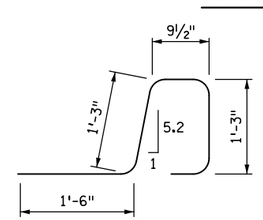

L501E
WITH WEARING COURSE

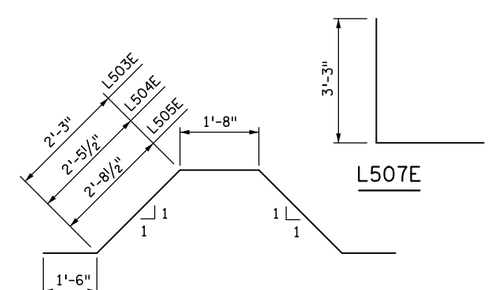

L503E, L504E & L505E

L507E

REVISION:

APPROVED: AUGUST 24, 2016
Kevin Western
STATE BRIDGE ENGINEER

CERTIFIED BY _____ LICENSED PROFESSIONAL ENGINEER _____ DATE
NAME: LICENSE NO.

TITLE: CONDUIT SYSTEM (LIGHTING)
36" TYPE S CONCRETE BARRIER BLISTER, WITH OR WITHOUT WEARING COURSE

DES: DR: CHK: CHK:

SHEET NO. OF SHEETS

APPROVED:

FIG. 5-397.406(B)

BRIDGE NO.

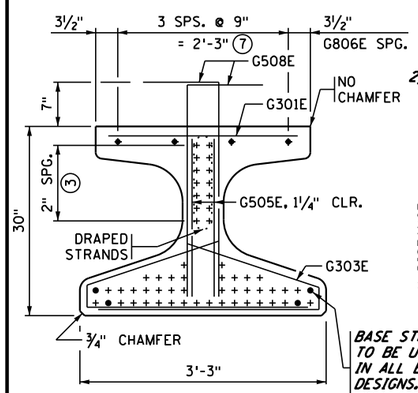

END VIEW

CUT STRANDS FLUSH WITH CONCRETE. COVER ENDS WITH SEALANT PER APPROVED PRODUCTS LIST "BRIDGE-PRESTRESSED BEAMS-CUT STRAND SEALANT."

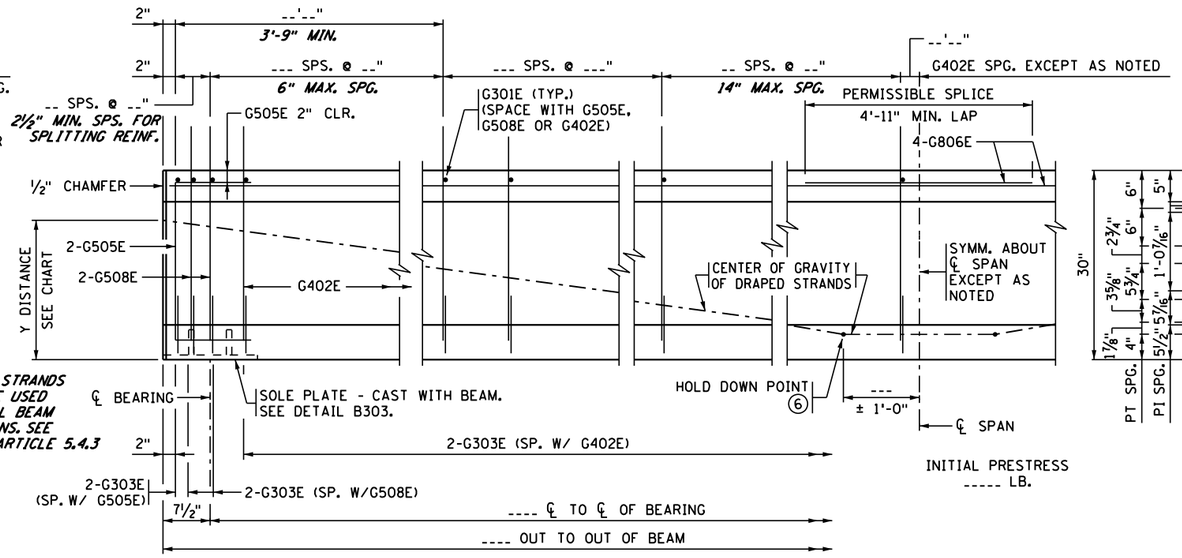

BEAM ELEVATION

TEXT IN ITALICS ARE DESIGNER NOTES. REMOVE PRIOR TO PLOTTING FINAL PLAN.

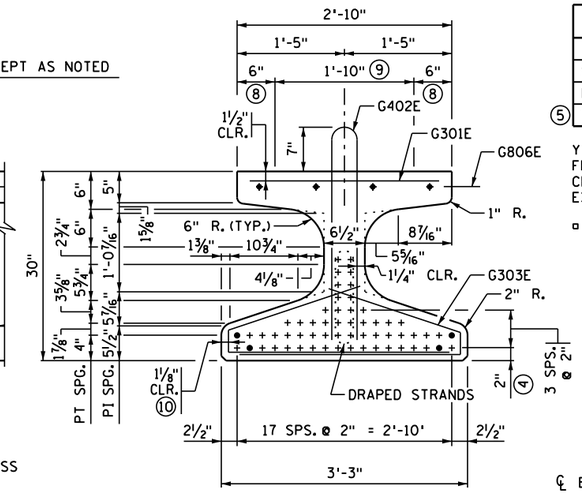

SECTION AT ℄ SPAN

Y DISTANCES (INCHES)	NO.	℄ SPAN	END
STRAIGHT STRANDS	----	----	
DRAPED STRANDS	----	----	---- ▫
⑤ TOTAL STRANDS	----	----	

Y = DISTANCE TO CENTER OF GRAVITY OF STRANDS FROM BOTTOM OF BEAM. ALL STRANDS SPACED 2" CENTER TO CENTER, HORIZONTALLY AND VERTICALLY, EXCEPT AS NOTED.

▫ A TOLERANCE OF ± 1" WILL BE PERMITTED IN THIS DIMENSION.

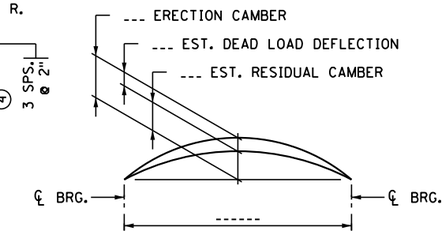

CAMBER DIAGRAM

DEAD LOAD DEFLECTION SHOWN IS FOR WEIGHT OF SLAB, WEARING COURSE, BARRIER, SIDEWALK AND MEDIAN WHERE APPLICABLE.

CONTRACTOR WILL TAKE ELEVATIONS AT TOP OF BEAMS AFTER ERECTION AND WILL ALLOW FOR DEFLECTION SHOWN TO ENABLE BUILDING FORMS TO CORRECT GRADE AND SPECIFIED SLAB THICKNESS. PROVIDE COPY OF ELEVATIONS TO THE ENGINEER.

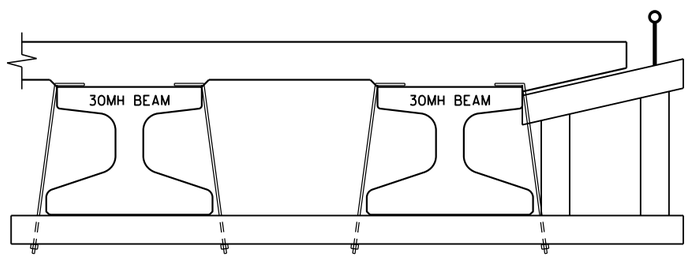

OVERHANG SUPPORT CONCEPT SKETCH

SEE THE "CONSTRUCTION NOTES" ON FRONT PORTION OF THE BRIDGE PLANS. THIS CONCEPT HAS BEEN USED SUCCESSFULLY ON PREVIOUS PROJECTS. CONTRACTORS MAY CONSIDER THIS OR ANOTHER SYSTEM AT THEIR DISCRETION.

CONTRACTOR SHALL VERIFY STABILITY OF FASCIA BEAMS FROM OVERTURNING (NO PERMANENT BEAM DIAPHRAGMS ARE PRESENT). CONTRACTOR SHALL PROVIDE TEMPORARY BRACING.

DESIGNER NOTE: ADD STANDARD TEMPORARY BRACING NOTE FOR 30MH PCB TO THE "CONSTRUCTION NOTES" ON THE FRONT PORTION OF THE PLANS.

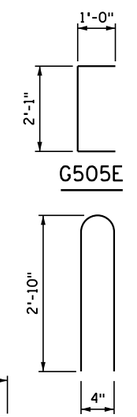

G505E G301E G402E

GENERAL NOTES

PROVIDE HANDLING HOOKS OR DEVICES AS REQUIRED BY CONTRACTOR.

MARK EACH BEAM SHOWING BRIDGE NUMBER, CASTING DATE, AND INDIVIDUAL IDENTIFICATION LETTERS AND NUMBERS ON THE FACE OF THE BEAM, NEAR THE END, SO LOCATED THAT THEY WILL BE EXPOSED AFTER THE END DIAPHRAGMS HAVE BEEN CAST. MARK FASCIA BEAMS ON THE INSIDE FACE. ENSURE ALL MARKINGS ARE STENCILLED AND CLEARLY LEGIBLE. FOR LOCATION OF BEAMS, SEE FRAMING PLAN.

ALL MATERIAL AND WORK SHOWN OR NOTED ON THIS SHEET IS INCLUDED IN UNIT PRICE BID FOR PRESTRESSED CONCRETE BEAMS. SEE SPEC. 2405.

SEE FRAMING PLAN FOR BEAM END MARKED "X".

AS AN ALTERNATE TO THE END DIAPHRAGM ANCHORAGES SHOWN, THE CONTRACTOR MAY SUBMIT DETAILS OF A CAST-IN-PLACE ANCHORAGE TO THE ENGINEER FOR APPROVAL. ANCHORAGE MUST PROVIDE AN ULTIMATE PULL OUT STRENGTH OF 15 KIPS PER ANCHORAGE.

APPLY AN APPROVED SEALER TO THE SIDES OF THE BEAM NEAR EACH END PER THE SPECIAL PROVISIONS.

① MINIMUM CONCRETE STRENGTH AT TIME OF PRESTRESS TRANSFER.

② MINIMUM CONCRETE STRENGTH WHEN BEAM CAN BE TRANSPORTED AND INSTALLED.

③ DRAPED STRANDS.

④ STRAIGHT STRANDS.

⑤ USE 0.6" DIA. 7-WIRE LOW RELAXATION PRESTRESSING STRAND, CONFORMING TO ASTM A416, GRADE 270.

⑥ CENTER OF GRAVITY OF HOLD DOWNS WHEN MULTIPLE HOLD DOWNS ARE USED.

⑦ TWO INSIDE BARS MAY BE PLACED ADJACENT TO VERTICAL STIRRUP FOR TYING CONVENIENCE.

⑧ STEEL TROWEL TO SMOOTH FINISH AND APPLY BOND BREAKER PER APPROVED PRODUCTS LIST.

⑨ ROUGH FLOAT AND BROOM TRANSVERSELY FOR BOND PER SPEC. 2405.3.D.

⑩ TYP. CLR. DISTANCE FOR ENTIRE BOTTOM FLANGE.

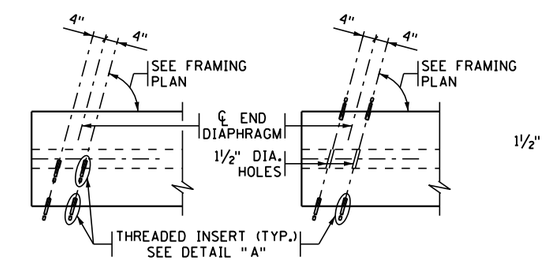

PLAN AT FASCIA BEAMS PLAN AT INTERIOR BEAMS

DESIGNER NOTE: MIN. DISTANCE BETWEEN THREADED INSERT AND END OF BEAM IS 3".

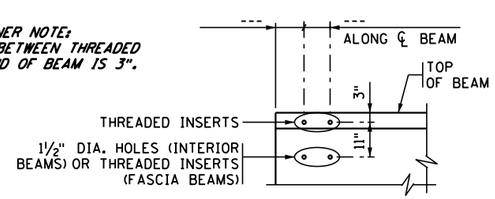

ELEVATION

CONCRETE END DIAPHRAGM

PARAPET ABUTMENT
(SEE DETAIL B814 FOR DIAPHRAGM DETAILS)

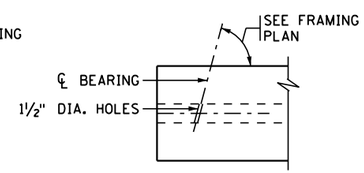

PLAN

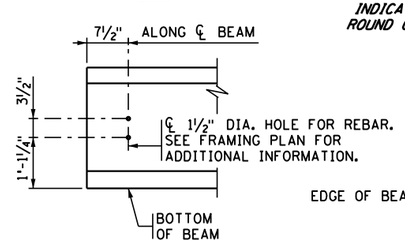

ELEVATION

CONCRETE END DIAPHRAGM

INTEGRAL & SEMI-INTEGRAL ABUTMENT. SEE SUPERSTRUCTURE DETAILS AND REINFORCEMENT FOR DIAPHRAGM DETAILS.

CALCULATED PRESTRESS LOSSES	
ELASTIC SHORTENING LOSS	--- KSI
LONG TERM LOSSES	--- KSI
TOTAL LOSSES	--- KSI

MINIMUM CONCRETE STRENGTH - KSI	
① f'ci	② f'c
--- KSI	--- KSI

DESIGNER NOTE: INDICATE MIN. REQUIRED CONCRETE STRENGTH, ROUND CONCRETE STRENGTH TO ONE TENTH KSI.

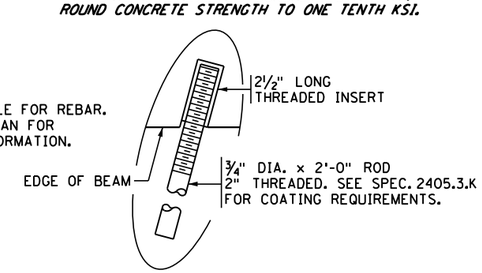

DETAIL "A"

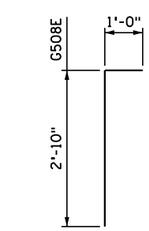

G508E

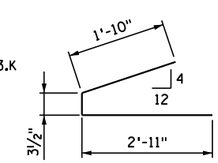

G303E

REVISED: OCTOBER 22, 2019

APPROVED: DECEMBER 20, 2018

Kevin Western
STATE BRIDGE ENGINEER

CERTIFIED BY _____ LICENSED PROFESSIONAL ENGINEER _____ DATE

NAME: LIC. NO.

TITLE: 30MH PRESTRESSED CONCRETE BEAM (PRETENSIONED) 30MH-BEAMS

DES:	DR:	APPROVED:	FIG. 5-397.501
CHK:	CHK:		BRIDGE NO.
SHEET NO. OF		SHEETS	

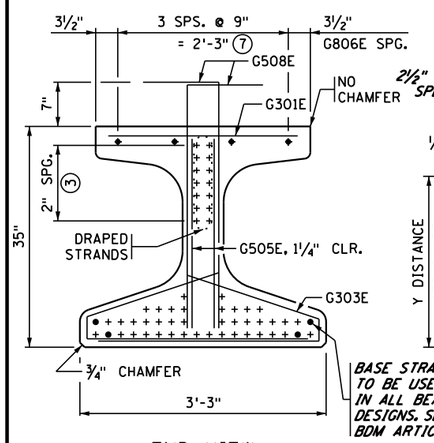

END VIEW

CUT STRANDS FLUSH WITH CONCRETE. COVER ENDS WITH SEALANT PER APPROVED PRODUCTS LIST "BRIDGE-PRESTRESSED BEAMS-CUT STRAND SEALANT."

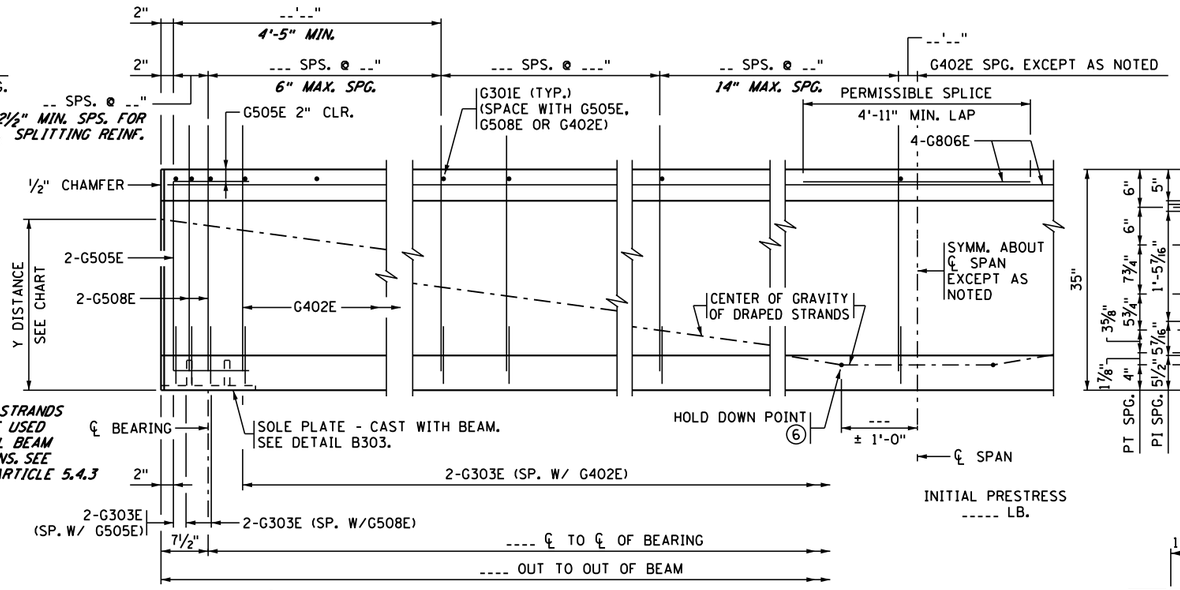

BEAM ELEVATION

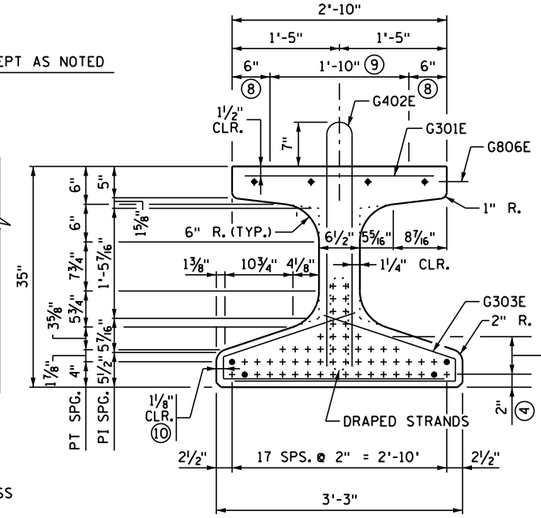

SECTION AT ℄ SPAN

Y DISTANCES (INCHES)	NO.	℄ SPAN	END
STRAIGHT STRANDS	----	----	
DRAPED STRANDS	----	----	---- ▫
⑤ TOTAL STRANDS	----	----	

Y = DISTANCE TO CENTER OF GRAVITY OF STRANDS FROM BOTTOM OF BEAM. ALL STRANDS SPACED 2" CENTER TO CENTER, HORIZONTALLY AND VERTICALLY, EXCEPT AS NOTED.

▫ A TOLERANCE OF ± 1" WILL BE PERMITTED IN THIS DIMENSION.

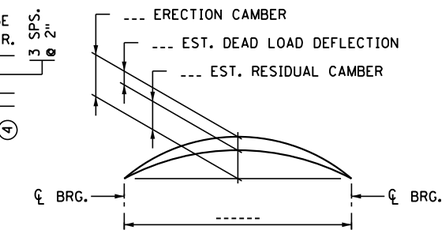

CAMBER DIAGRAM

DEAD LOAD DEFLECTION SHOWN IS FOR WEIGHT OF SLAB, WEARING COURSE, BARRIER, SIDEWALK AND MEDIAN WHERE APPLICABLE.

CONTRACTOR WILL TAKE ELEVATIONS AT TOP OF BEAMS AFTER ERECTION AND WILL ALLOW FOR DEFLECTION SHOWN TO ENABLE BUILDING FORMS TO CORRECT GRADE AND SPECIFIED SLAB THICKNESS. PROVIDE COPY OF ELEVATIONS TO THE ENGINEER.

TEXT IN ITALICS ARE DESIGNER NOTES. REMOVE PRIOR TO PLOTTING FINAL PLAN.

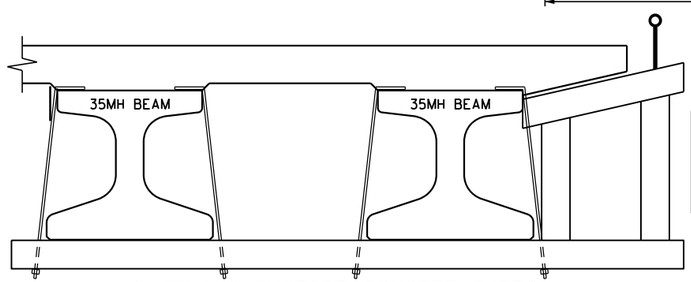

OVERHANG SUPPORT CONCEPT SKETCH

SEE THE "CONSTRUCTION NOTES" ON FRONT PORTION OF THE BRIDGE PLANS. THIS CONCEPT HAS BEEN USED SUCCESSFULLY ON PREVIOUS PROJECTS. CONTRACTORS MAY CONSIDER THIS OR ANOTHER SYSTEM AT THEIR DISCRETION.

CONTRACTOR SHALL VERIFY STABILITY OF FASCIA BEAMS FROM OVERTURNING (NO PERMANENT BEAM DIAPHRAGMS ARE PRESENT). CONTRACTOR SHALL PROVIDE TEMPORARY BRACING.

DESIGNER NOTE: ADD STANDARD TEMPORARY BRACING NOTE FOR 35MH PCB TO THE "CONSTRUCTION NOTES" ON THE FRONT PORTION OF THE PLANS.

CALCULATED PRESTRESS LOSSES	
ELASTIC SHORTENING LOSS	--- KSI
LONG TERM LOSSES	--- KSI
TOTAL LOSSES	--- KSI

MINIMUM CONCRETE STRENGTH - KSI	
① f'ci	② f'c
--- KSI	--- KSI

DESIGNER NOTE: INDICATE MIN. REQUIRED CONCRETE STRENGTH, ROUND CONCRETE STRENGTH TO ONE TENTH KSI.

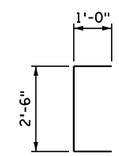

G505E

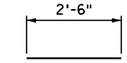

G301E

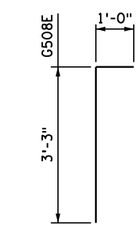

G508E

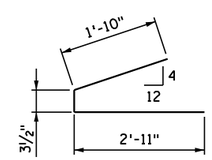

G303E

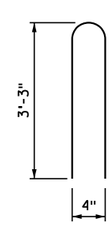

G402E

GENERAL NOTES

PROVIDE HANDLING HOOKS OR DEVICES AS REQUIRED BY CONTRACTOR.

MARK EACH BEAM SHOWING BRIDGE NUMBER, CASTING DATE, AND INDIVIDUAL IDENTIFICATION LETTERS AND NUMBERS ON THE FACE OF THE BEAM, NEAR THE END, SO LOCATED THAT THEY WILL BE EXPOSED AFTER THE END DIAPHRAGMS HAVE BEEN CAST. MARK FASCIA BEAMS ON THE INSIDE FACE. ENSURE ALL MARKINGS ARE STENCILLED AND CLEARLY LEGIBLE. FOR LOCATION OF BEAMS, SEE FRAMING PLAN.

ALL MATERIAL AND WORK SHOWN OR NOTED ON THIS SHEET IS INCLUDED IN UNIT PRICE BID FOR PRESTRESSED CONCRETE BEAMS. SEE SPEC. 2405.

SEE FRAMING PLAN FOR BEAM END MARKED "X".

AS AN ALTERNATE TO THE END DIAPHRAGM ANCHORAGES SHOWN, THE CONTRACTOR MAY SUBMIT DETAILS OF A CAST-IN-PLACE ANCHORAGE TO THE ENGINEER FOR APPROVAL. ANCHORAGE MUST PROVIDE AN ULTIMATE PULL OUT STRENGTH OF 15 KIPS PER ANCHORAGE.

APPLY AN APPROVED SEALER TO THE SIDES OF THE BEAM NEAR EACH END PER THE SPECIAL PROVISIONS.

① MINIMUM CONCRETE STRENGTH AT TIME OF PRESTRESS TRANSFER.

② MINIMUM CONCRETE STRENGTH WHEN BEAM CAN BE TRANSPORTED AND INSTALLED.

③ DRAPED STRANDS.

④ STRAIGHT STRANDS.

⑤ USE 0.6" DIA. 7-WIRE LOW RELAXATION PRESTRESSING STRAND, CONFORMING TO ASTM A416, GRADE 270.

⑥ CENTER OF GRAVITY OF HOLD DOWNS WHEN MULTIPLE HOLD DOWNS ARE USED.

⑦ TWO INSIDE BARS MAY BE PLACED ADJACENT TO VERTICAL STIRRUP FOR TYING CONVENIENCE.

⑧ STEEL TROWEL TO SMOOTH FINISH AND APPLY BOND BREAKER PER APPROVED PRODUCTS LIST.

⑨ ROUGH FLOAT AND BROOM TRANSVERSELY FOR BOND PER SPEC. 2405.3.D.

⑩ TYP. CLR. DISTANCE FOR ENTIRE BOTTOM FLANGE.

DESIGNER NOTE: MIN. DISTANCE BETWEEN THREADED INSERT AND END OF BEAM IS 3".

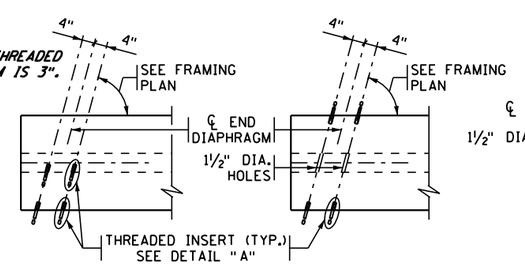

PLAN AT FASCIA BEAMS

PLAN AT INTERIOR BEAMS

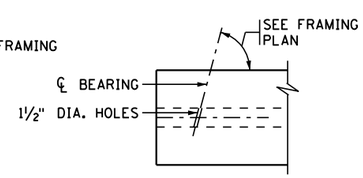

PLAN

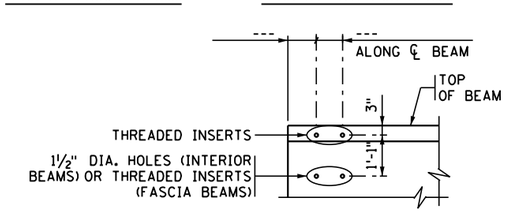

ELEVATION

CONCRETE END DIAPHRAGM

PARAPET ABUTMENT
(SEE DETAIL B814 FOR DIAPHRAGM DETAILS)

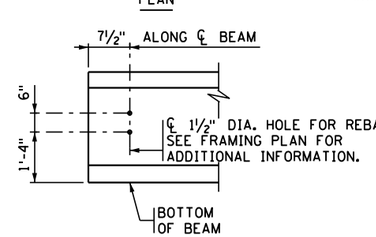

ELEVATION

CONCRETE END DIAPHRAGM

INTEGRAL & SEMI-INTEGRAL ABUTMENT.
SEE SUPERSTRUCTURE DETAILS AND REINFORCEMENT FOR DIAPHRAGM DETAILS.

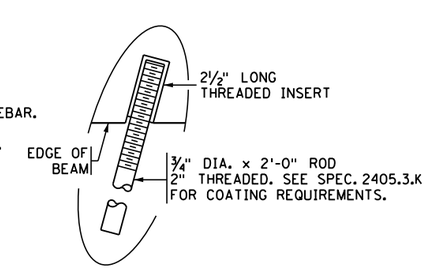

DETAIL "A"

REVISED: OCTOBER 22, 2019

APPROVED: DECEMBER 20, 2018

Kevin Western
STATE BRIDGE ENGINEER

CERTIFIED BY _____ LICENSED PROFESSIONAL ENGINEER _____ DATE

NAME: LIC. NO.

TITLE: 35MH PRESTRESSED CONCRETE BEAM (PRETENSIONED) 35MH-

BEAMS

DES: DR: CHK: CHK:

SHEET NO. OF SHEETS

APPROVED:

FIG. 5-397.502

BRIDGE NO.

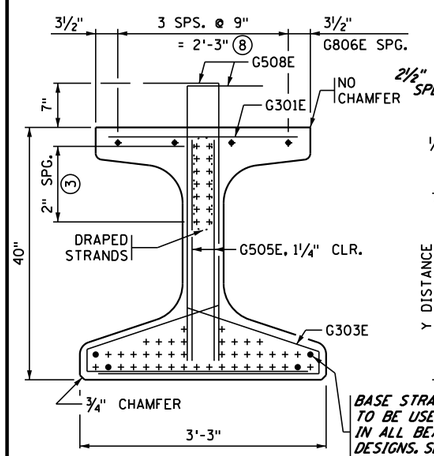

BASE STRANDS TO BE USED IN ALL BEAM DESIGNS. SEE BDM ARTICLE 5.4.3

END VIEW

CUT STRANDS FLUSH WITH CONCRETE. COVER ENDS WITH SEALANT PER APPROVED PRODUCTS LIST "BRIDGE-PRESTRESSED BEAMS-CUT STRAND SEALANT."

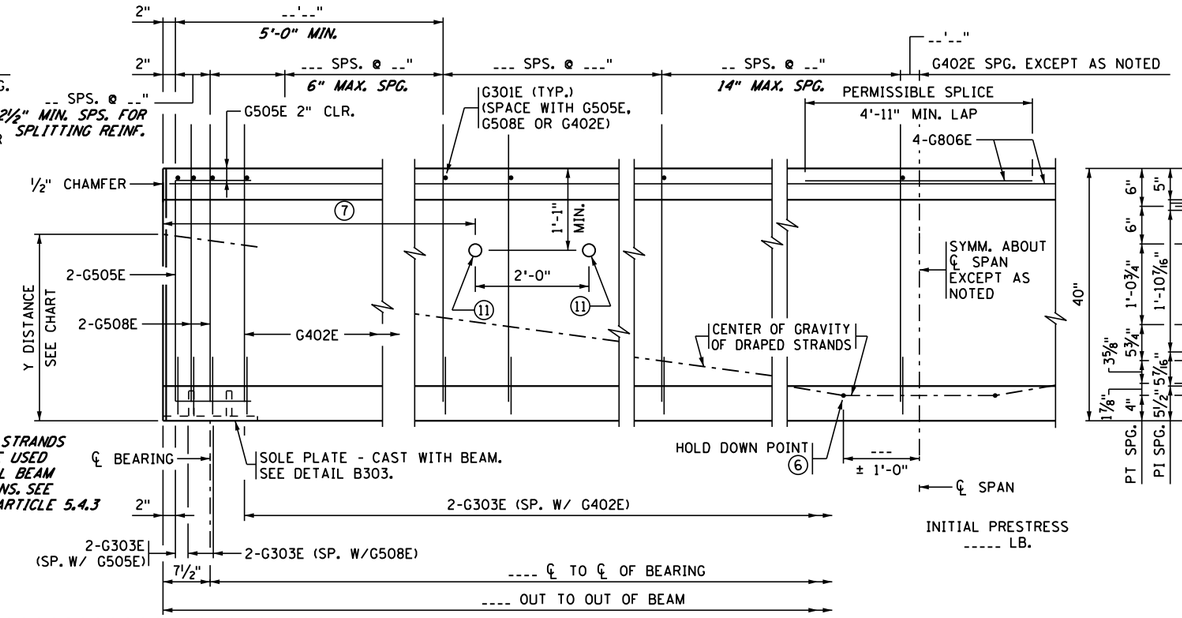

TEXT IN ITALICS ARE DESIGNER NOTES. REMOVE PRIOR TO PLOTTING FINAL PLAN.

BEAM ELEVATION

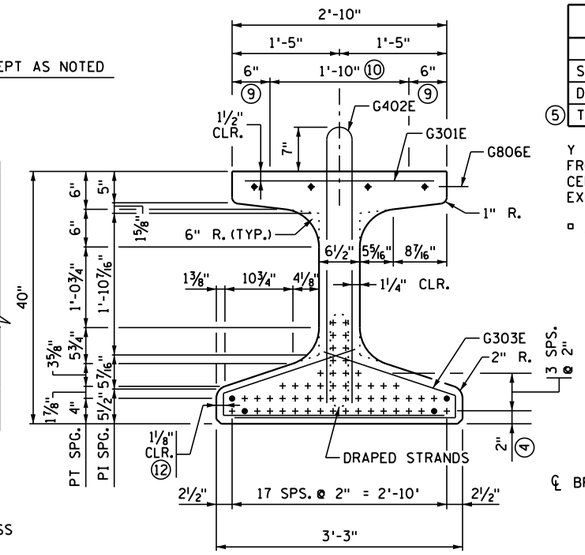

SECTION AT ℄ SPAN

Y DISTANCES (INCHES)	NO.	℄ SPAN	END
STRAIGHT STRANDS	----	----	
DRAPED STRANDS	----	----	---- ▫
(5) TOTAL STRANDS	----	----	

Y = DISTANCE TO CENTER OF GRAVITY OF STRANDS FROM BOTTOM OF BEAM. ALL STRANDS SPACED 2" CENTER TO CENTER, HORIZONTALLY AND VERTICALLY, EXCEPT AS NOTED.

▫ A TOLERANCE OF ± 1" WILL BE PERMITTED IN THIS DIMENSION.

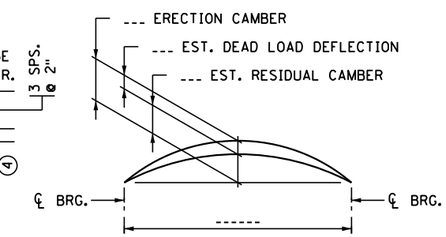

CAMBER DIAGRAM

ERECTION CAMBER SHOWN IS AFTER DIAPHRAGMS ARE IN PLACE.

DEAD LOAD DEFLECTION SHOWN IS FOR WEIGHT OF SLAB, WEARING COURSE, BARRIER, SIDEWALK AND MEDIAN WHERE APPLICABLE.

CONTRACTOR WILL TAKE ELEVATIONS AT TOP OF BEAMS AFTER ERECTION AND WILL ALLOW FOR DEFLECTION SHOWN TO ENABLE BUILDING FORMS TO CORRECT GRADE AND SPECIFIED SLAB THICKNESS. PROVIDE COPY OF ELEVATIONS TO THE ENGINEER.

CALCULATED PRESTRESS LOSSES	
ELASTIC SHORTENING LOSS	--- KSI
LONG TERM LOSSES	--- KSI
TOTAL LOSSES	--- KSI

MINIMUM CONCRETE STRENGTH - KSI	
(1) f'ci	(2) f'c
--- KSI	--- KSI

DESIGNER NOTE:
INDICATE MIN. REQUIRED CONCRETE STRENGTH, ROUND CONCRETE STRENGTH TO ONE TENTH KSI.

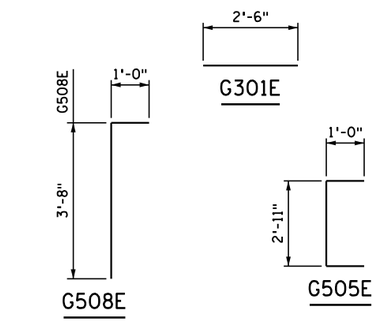

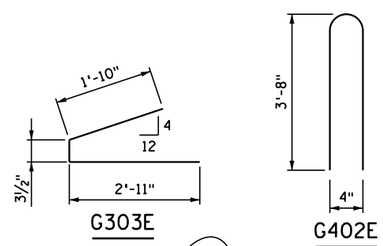

DESIGNER NOTE:
MIN. DISTANCE BETWEEN THREADED INSERT AND END OF BEAM IS 3".

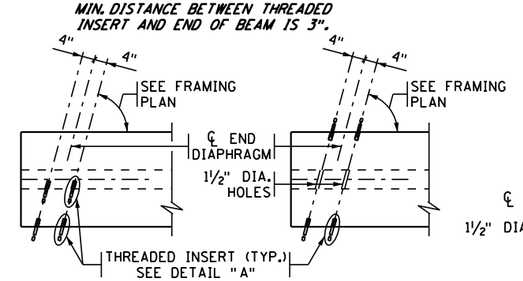

PLAN AT FASCIA BEAMS

PLAN AT INTERIOR BEAMS

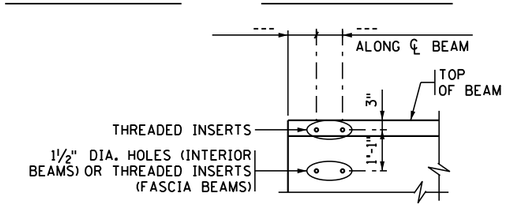

ELEVATION

CONCRETE END DIAPHRAGM

PARAPET ABUTMENT
(SEE DETAIL B814 FOR DIAPHRAGM DETAILS)

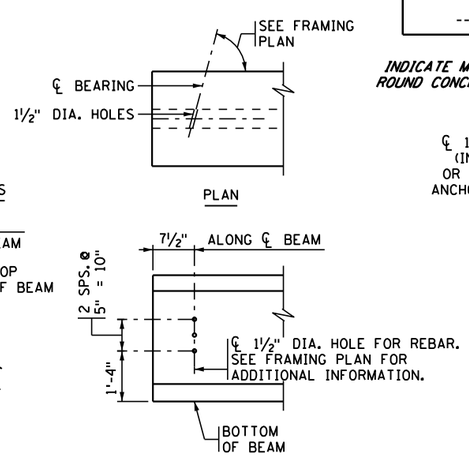

PLAN

ELEVATION

CONCRETE END DIAPHRAGM

INTEGRAL & SEMI-INTEGRAL ABUTMENT.
SEE SUPERSTRUCTURE DETAILS AND REINFORCEMENT FOR DIAPHRAGM DETAILS.

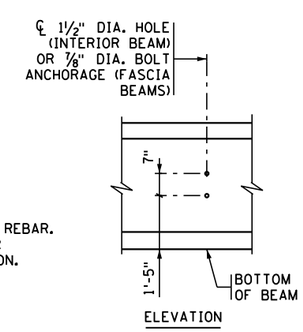

ELEVATION

STEEL INTERMEDIATE DIAPHRAGM

(SEE DETAIL B403 FOR DIAPHRAGM DETAILS)

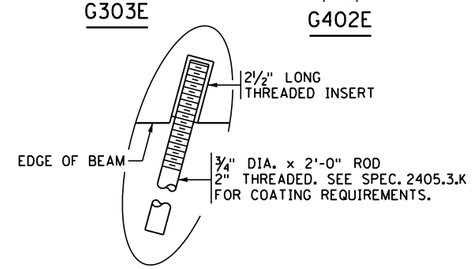

DETAIL "A"

GENERAL NOTES

PROVIDE HANDLING HOOKS OR DEVICES AS REQUIRED BY CONTRACTOR.

MARK EACH BEAM SHOWING BRIDGE NUMBER, CASTING DATE, AND INDIVIDUAL IDENTIFICATION LETTERS AND NUMBERS ON THE FACE OF THE BEAM, NEAR THE END, SO LOCATED THAT THEY WILL BE EXPOSED AFTER THE END DIAPHRAGMS HAVE BEEN CAST. MARK FASCIA BEAMS ON THE INSIDE FACE. ENSURE ALL MARKINGS ARE STENCILLED AND CLEARLY LEGIBLE. FOR LOCATION OF BEAMS, SEE FRAMING PLAN.

ALL MATERIAL AND WORK SHOWN OR NOTED ON THIS SHEET IS INCLUDED IN UNIT PRICE BID FOR PRESTRESSED CONCRETE BEAMS. SEE SPEC. 2405.

SEE FRAMING PLAN FOR BEAM END MARKED "X" AND DIAPHRAGM SPACING.

AS AN ALTERNATE TO THE END DIAPHRAGM ANCHORAGES SHOWN, THE CONTRACTOR MAY SUBMIT DETAILS OF A CAST-IN-PLACE ANCHORAGE TO THE ENGINEER FOR APPROVAL. ANCHORAGE MUST PROVIDE AN ULTIMATE PULL OUT STRENGTH OF 15 KIPS PER ANCHORAGE.

APPLY AN APPROVED SEALER TO THE SIDES OF THE BEAM NEAR EACH END PER THE SPECIAL PROVISIONS.

(1) MINIMUM CONCRETE STRENGTH AT TIME OF PRESTRESS TRANSFER.
(2) MINIMUM CONCRETE STRENGTH WHEN BEAM CAN BE TRANSPORTED AND INSTALLED.
(3) DRAPED STRANDS.
(4) STRAIGHT STRANDS.
(5) USE 0.6" DIA. 7-WIRE LOW RELAXATION PRESTRESSING STRAND, CONFORMING TO ASTM A416, GRADE 270.
(6) CENTER OF GRAVITY OF HOLD DOWNS WHEN MULTIPLE HOLD DOWNS ARE USED.
(7) DIMENSION DETERMINED BY CONTRACTOR. MAINTAIN 2" MINIMUM CLEAR FROM STRANDS.
(8) TWO INSIDE BARS MAY BE PLACED ADJACENT TO VERTICAL STIRRUP FOR TYING CONVENIENCE.
(9) STEEL TROWEL TO SMOOTH FINISH AND APPLY BOND BREAKER PER APPROVED PRODUCTS LIST.
(10) ROUGH FLOAT AND BROOM TRANSVERSELY FOR BOND PER SPEC. 2405.3.D.
(11) OPTIONAL: 2" MAX. DIA. SLEEVE FOR HAULING (AFTER INSTALLATION, COAT WITH APPROVED EPOXY BONDING AGENT & FILL WITH APPROVED NON-SHRINK GROUT).
(12) TYP. CLR. DISTANCE FOR ENTIRE BOTTOM FLANGE.

REVISED: OCTOBER 22, 2019

APPROVED: DECEMBER 20, 2018
Kevin Western
STATE BRIDGE ENGINEER

CERTIFIED BY _____ LICENSED PROFESSIONAL ENGINEER _____ DATE
NAME: LIC. NO.

TITLE: 40MH PRESTRESSED CONCRETE BEAM (PRETENSIONED) 40MH-

BEAMS

DES: DR: CHK: CHK:

SHEET NO. OF SHEETS

FIG. 5-397.503

APPROVED:

BRIDGE NO.

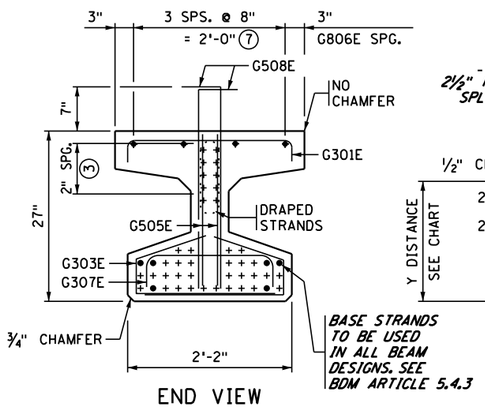

END VIEW

CUT STRANDS FLUSH WITH CONCRETE. COVER ENDS WITH SEALANT PER APPROVED PRODUCTS LIST "BRIDGE-PRESTRESSED BEAMS-CUT STRAND SEALANT."

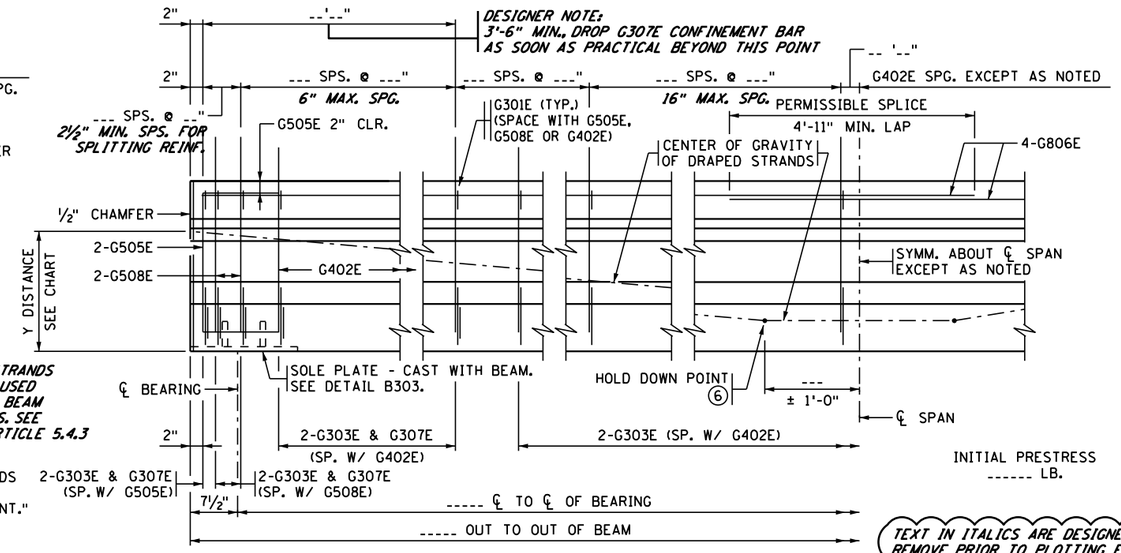

INITIAL PRESTRESS ------ LB.

BEAM ELEVATION

TEXT IN ITALICS ARE DESIGNER NOTES. REMOVE PRIOR TO PLOTTING FINAL PLAN.

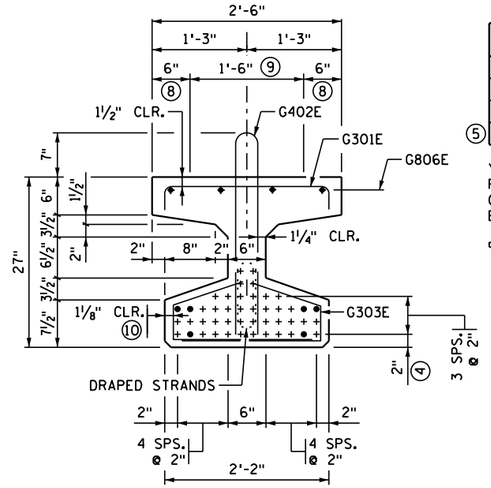

SECTION AT ℄ SPAN

Y DISTANCES (INCHES)			
	NO.	℄ SPAN	END
STRAIGHT STRANDS	----	----	----
DRAPED STRANDS	----	----	---- ▫
⑤ TOTAL STRANDS	----	----	----

Y = DISTANCE TO CENTER OF GRAVITY OF STRANDS FROM BOTTOM OF BEAM. ALL STRANDS SPACED 2" CENTER TO CENTER, HORIZONTALLY AND VERTICALLY, EXCEPT AS NOTED.

▫ A TOLERANCE OF ± 1" WILL BE PERMITTED IN THIS DIMENSION.

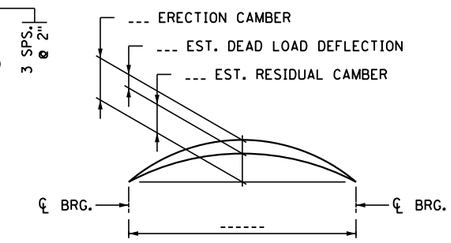

CAMBER DIAGRAM

DEAD LOAD DEFLECTION SHOWN IS FOR WEIGHT OF SLAB, WEARING COURSE, BARRIER, SIDEWALK AND MEDIAN WHERE APPLICABLE.

CONTRACTOR WILL TAKE ELEVATIONS AT TOP OF BEAMS AFTER ERECTION AND WILL ALLOW FOR DEFLECTION SHOWN TO ENABLE BUILDING FORMS TO CORRECT GRADE AND SPECIFIED SLAB THICKNESS. PROVIDE COPY OF ELEVATIONS TO THE ENGINEER.

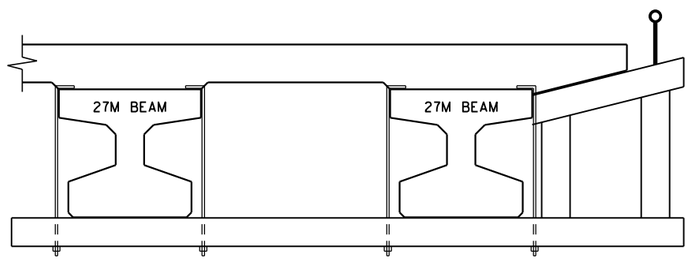

OVERHANG SUPPORT CONCEPT SKETCH

SEE THE "CONSTRUCTION NOTES" ON FRONT PORTION OF THE BRIDGE PLANS. THIS CONCEPT HAS BEEN USED SUCCESSFULLY ON PREVIOUS PROJECTS. CONTRACTORS MAY CONSIDER THIS OR ANOTHER SYSTEM AT THEIR DISCRETION.

CONTRACTOR SHALL VERIFY STABILITY OF FASCIA BEAMS FROM OVERTURNING (NO PERMANENT BEAM DIAPHRAGMS ARE PRESENT). CONTRACTOR SHALL PROVIDE TEMPORARY BRACING.

DESIGNER NOTE: ADD STANDARD TEMPORARY BRACING NOTE FOR 27M PCB TO THE "CONSTRUCTION NOTES" ON THE FRONT PORTION OF THE PLANS.

CALCULATED PRESTRESS LOSSES	
ELASTIC SHORTENING LOSS	---- KSI
LONG TERM LOSSES	---- KSI
TOTAL LOSSES	---- KSI

MINIMUM CONCRETE STRENGTH - KSI	
① f'ci	② f'c
---- KSI	---- KSI

DESIGNER NOTE: INDICATE MIN. REQUIRED CONCRETE STRENGTH, ROUND CONCRETE STRENGTH TO ONE TENTH KSI.

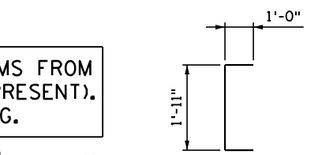

G505E

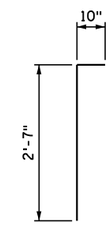

G508E

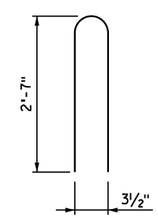

G402E

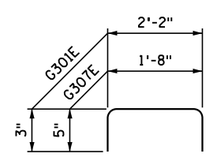

G301E & G307E

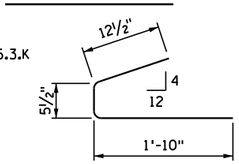

G303E

GENERAL NOTES

PROVIDE HANDLING HOOKS OR DEVICES AS REQUIRED BY CONTRACTOR.

MARK EACH BEAM SHOWING BRIDGE NUMBER, CASTING DATE, AND INDIVIDUAL IDENTIFICATION LETTERS AND NUMBERS ON THE FACE OF THE BEAM, NEAR THE END, SO LOCATED THAT THEY WILL BE EXPOSED AFTER THE END DIAPHRAGMS HAVE BEEN CAST. MARK FASCIA BEAMS ON THE INSIDE FACE. ENSURE ALL MARKINGS ARE STENCILLED AND CLEARLY LEGIBLE. FOR LOCATION OF BEAMS, SEE FRAMING PLAN.

ALL MATERIAL AND WORK SHOWN OR NOTED ON THIS SHEET IS INCLUDED IN UNIT PRICE BID FOR PRESTRESSED CONCRETE BEAMS. SEE SPEC. 2405.

SEE FRAMING PLAN FOR BEAM END MARKED "X".

AS AN ALTERNATE TO THE END DIAPHRAGM ANCHORAGES SHOWN, THE CONTRACTOR MAY SUBMIT DETAILS OF A CAST-IN-PLACE ANCHORAGE TO THE ENGINEER FOR APPROVAL. ANCHORAGE MUST PROVIDE AN ULTIMATE PULL OUT STRENGTH OF 15 KIPS PER ANCHORAGE.

APPLY AN APPROVED SEALER TO THE SIDES OF THE BEAM NEAR EACH END PER THE SPECIAL PROVISIONS.

① MINIMUM CONCRETE STRENGTH AT TIME OF PRESTRESS TRANSFER.

② MINIMUM CONCRETE STRENGTH WHEN BEAM CAN BE TRANSPORTED AND INSTALLED.

③ DRAPED STRANDS.

④ STRAIGHT STRANDS.

⑤ USE 0.6" DIA. 7-WIRE LOW RELAXATION PRESTRESSING STRAND, CONFORMING TO ASTM A416, GRADE 270.

⑥ CENTER OF GRAVITY OF HOLD DOWNS WHEN MULTIPLE HOLD DOWNS ARE USED.

⑦ TWO INSIDE BARS MAY BE PLACED ADJACENT TO VERTICAL STIRRUP FOR TYING CONVENIENCE.

⑧ STEEL TROWEL TO SMOOTH FINISH AND APPLY BOND BREAKER PER APPROVED PRODUCTS LIST.

⑨ ROUGH FLOAT AND BROOM TRANSVERSELY FOR BOND IN ACCORDANCE WITH SPEC. 2405.3.D.

⑩ TYP. CLR. FOR ENTIRE BOTTOM FLANGE.

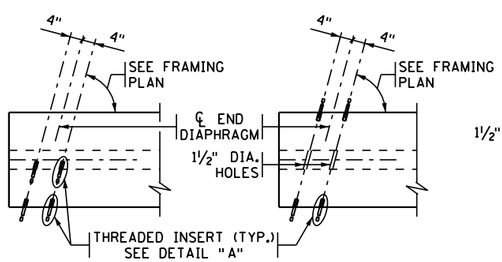

PLAN AT FASCIA BEAMS

PLAN AT INTERIOR BEAMS

DESIGNER NOTE: MIN. DISTANCE BETWEEN THREADED INSERT AND END OF BEAM IS 3".

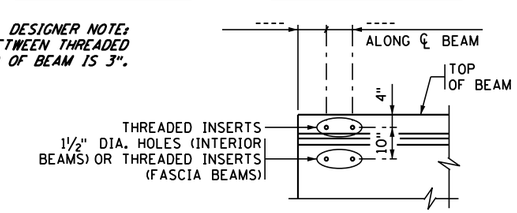

ELEVATION

CONCRETE END DIAPHRAGM

PARAPET ABUTMENT
(SEE DETAIL B814 FOR DIAPHRAGM DETAILS)

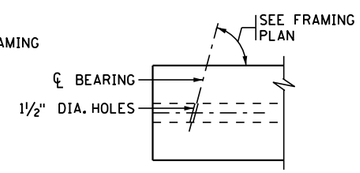

PLAN

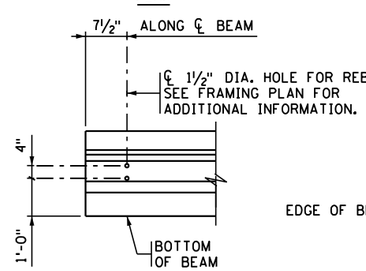

ELEVATION

CONCRETE END DIAPHRAGM

INTEGRAL & SEMI-INTEGRAL ABUTMENT. SEE SUPERSTRUCTURE DETAILS AND REINFORCEMENT FOR DIAPHRAGM DETAILS.

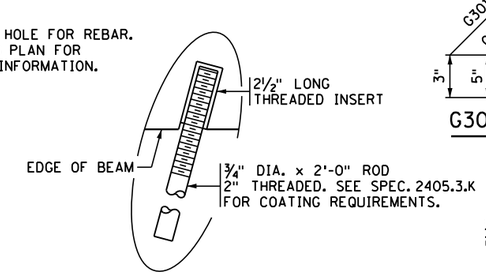

DETAIL "A"

REVISED: OCTOBER 22, 2019

APPROVED: JANUARY 13, 2015

Nancy Daubenberger
STATE BRIDGE ENGINEER

CERTIFIED BY _____ LICENSED PROFESSIONAL ENGINEER _____ DATE

NAME: LIC. NO.

TITLE: 27" PRESTRESSED CONCRETE BEAM (PRETENSIONED) 27M-

BEAMS

DES: DR: CHK: CHK:

APPROVED:

SHEET NO. OF SHEETS

FIG. 5-397.504

BRIDGE NO.

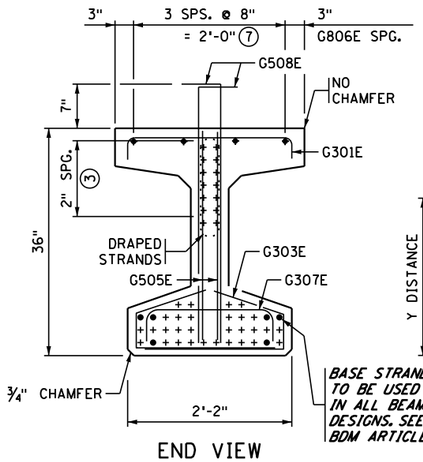

END VIEW

CUT STRANDS FLUSH WITH CONCRETE. COVER ENDS WITH SEALANT PER APPROVED PRODUCTS LIST "BRIDGE-PRESTRESSED BEAMS-CUT STRAND SEALANT."

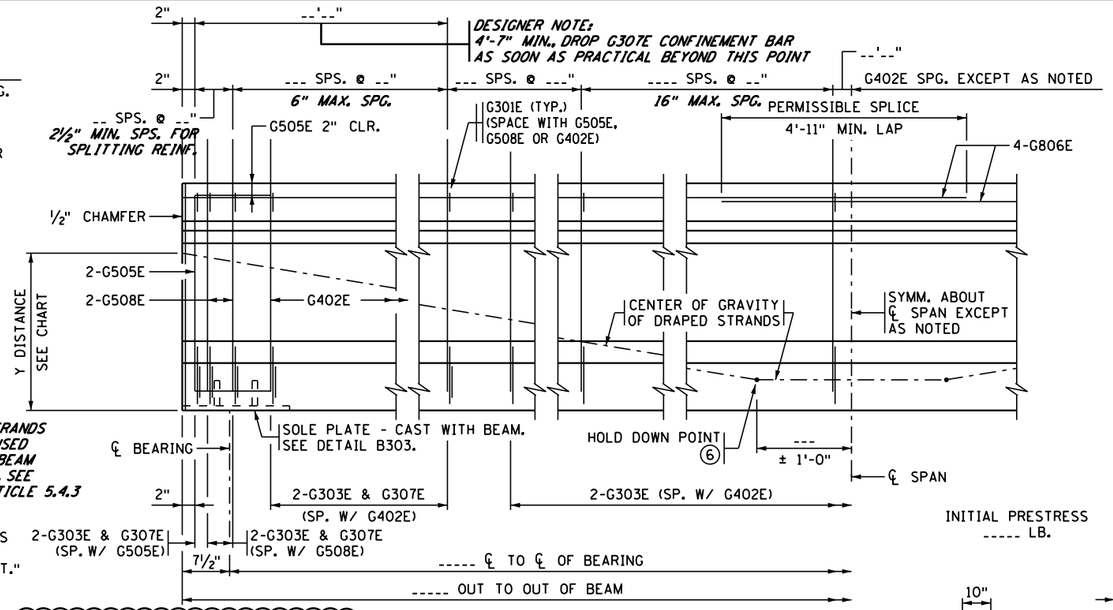

TEXT IN ITALICS ARE DESIGNER NOTES. REMOVE PRIOR TO PLOTTING FINAL PLAN.

BEAM ELEVATION

INITIAL PRESTRESS
----- LB.

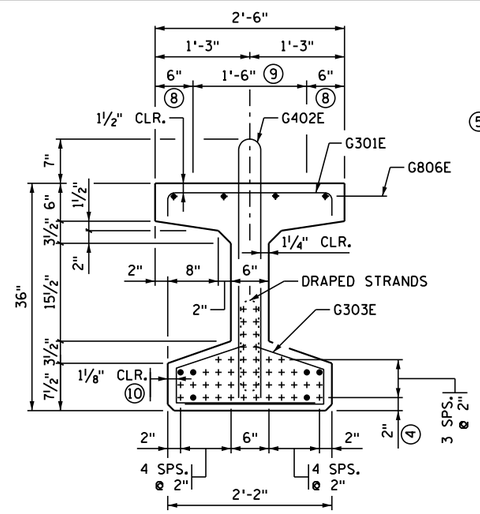

SECTION AT ℄ SPAN

Y DISTANCES (INCHES)	NO.	℄ SPAN	END
STRAIGHT STRANDS	----	----	
DRAPED STRANDS	----	----	---- ▫
(5) TOTAL STRANDS	----	----	

Y = DISTANCE TO CENTER OF GRAVITY OF STRANDS FROM BOTTOM OF BEAM. ALL STRANDS SPACED 2" CENTER TO CENTER, HORIZONTALLY AND VERTICALLY, EXCEPT AS NOTED.

▫ A TOLERANCE OF ± 1" WILL BE PERMITTED IN THIS DIMENSION.

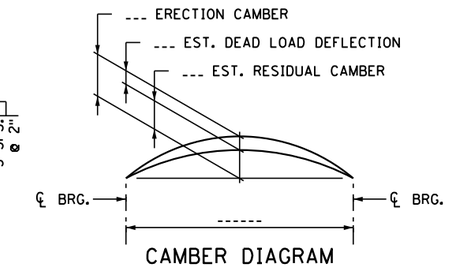

CAMBER DIAGRAM

ERECTION CAMBER SHOWN IS AFTER DIAPHRAGMS ARE IN PLACE.

DEAD LOAD DEFLECTION SHOWN IS FOR WEIGHT OF SLAB, WEARING COURSE, BARRIER, SIDEWALK AND MEDIAN WHERE APPLICABLE.

CONTRACTOR WILL TAKE ELEVATIONS AT TOP OF BEAMS AFTER ERECTION AND WILL ALLOW FOR DEFLECTION SHOWN TO ENABLE BUILDING FORMS TO CORRECT GRADE AND SPECIFIED SLAB THICKNESS. PROVIDE COPY OF ELEVATIONS TO THE ENGINEER.

CALCULATED PRESTRESS LOSSES	
ELASTIC SHORTENING LOSS	---- KSI
LONG TERM LOSSES	---- KSI
TOTAL LOSSES	---- KSI

MINIMUM CONCRETE STRENGTH - KSI	
(1) f'ci	(2) f'c
--- KSI	--- KSI

DESIGNER NOTE: INDICATE MIN. REQUIRED CONCRETE STRENGTH, ROUND CONCRETE STRENGTH TO ONE TENTH KSI.

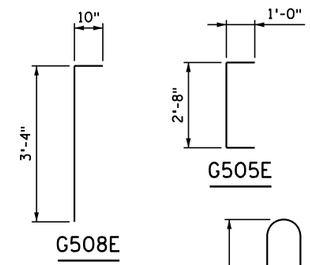

G508E

G505E

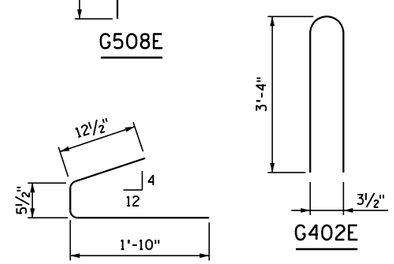

G303E

G402E

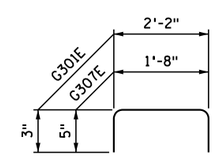

G301E & G307E

GENERAL NOTES

PROVIDE HANDLING HOOKS OR DEVICES AS REQUIRED BY CONTRACTOR.

MARK EACH BEAM SHOWING BRIDGE NUMBER, CASTING DATE, AND INDIVIDUAL IDENTIFICATION LETTERS AND NUMBERS ON THE FACE OF THE BEAM, NEAR THE END, SO LOCATED THAT THEY WILL BE EXPOSED AFTER THE END DIAPHRAGMS HAVE BEEN CAST. MARK FASCIA BEAMS ON THE INSIDE FACE. ENSURE ALL MARKINGS ARE STENCILLED AND CLEARLY LEGIBLE. FOR LOCATION OF BEAMS, SEE FRAMING PLAN.

ALL MATERIAL AND WORK SHOWN OR NOTED ON THIS SHEET IS INCLUDED IN UNIT PRICE BID FOR PRESTRESSED CONCRETE BEAMS. SEE SPEC. 2405.

SEE FRAMING PLAN FOR BEAM END MARKED "X" AND DIAPHRAGM SPACING.

AS AN ALTERNATE TO THE END DIAPHRAGM ANCHORAGES SHOWN, THE CONTRACTOR MAY SUBMIT DETAILS OF A CAST-IN-PLACE ANCHORAGE TO THE ENGINEER FOR APPROVAL. ANCHORAGE MUST PROVIDE AN ULTIMATE PULL OUT STRENGTH OF 15 KIPS PER ANCHORAGE.

APPLY AN APPROVED SEALER TO THE SIDES OF THE BEAM NEAR EACH END PER THE SPECIAL PROVISIONS.

(1) MINIMUM CONCRETE STRENGTH AT TIME OF PRESTRESS TRANSFER.

(2) MINIMUM CONCRETE STRENGTH WHEN BEAM CAN BE TRANSPORTED AND INSTALLED.

(3) DRAPED STRANDS.

(4) STRAIGHT STRANDS.

(5) USE 0.6" DIA. 7-WIRE LOW RELAXATION PRESTRESSING STRAND, CONFORMING TO ASTM A416, GRADE 270.

(6) CENTER OF GRAVITY OF HOLD DOWNS WHEN MULTIPLE HOLD DOWNS ARE USED.

(7) TWO INSIDE BARS MAY BE PLACED ADJACENT TO VERTICAL STIRRUP FOR TYING CONVENIENCE.

(8) STEEL TROWEL TO SMOOTH FINISH AND APPLY BOND BREAKER PER APPROVED PRODUCTS LIST.

(9) ROUGH FLOAT AND BROOM TRANSVERSELY FOR BOND IN ACCORDANCE WITH SPEC. 2405.3.D.

(10) TYP. CLR. FOR ENTIRE BOTTOM FLANGE.

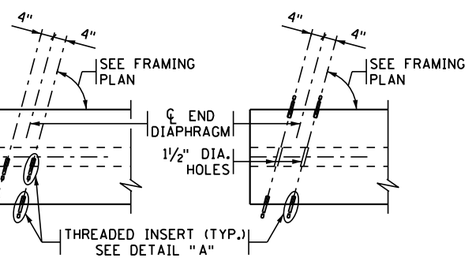

PLAN AT FASCIA BEAMS

PLAN AT INTERIOR BEAMS

DESIGNER NOTE: MIN. DISTANCE BETWEEN THREADED INSERT AND END OF BEAM IS 3".

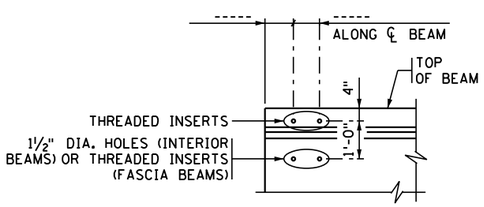

ELEVATION

CONCRETE END DIAPHRAGM

PARAPET ABUTMENT
(SEE DETAIL B814 FOR DIAPHRAGM DETAILS)

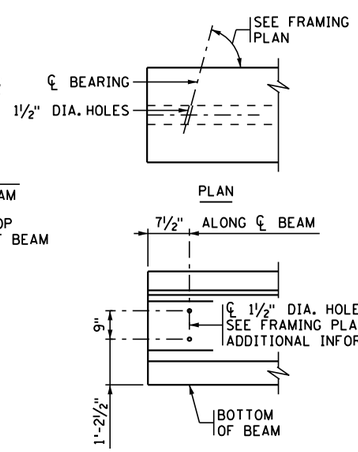

ELEVATION

CONCRETE END DIAPHRAGM

INTEGRAL & SEMI-INTEGRAL ABUTMENT. SEE SUPERSTRUCTURE DETAILS AND REINFORCEMENT FOR DIAPHRAGM DETAILS.

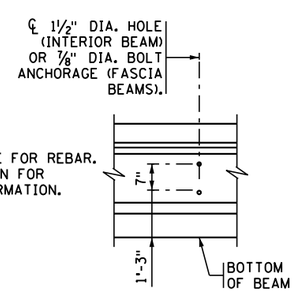

ELEVATION

STEEL INTERMEDIATE DIAPHRAGM

(SEE DETAIL B403 FOR DIAPHRAGM DETAILS)

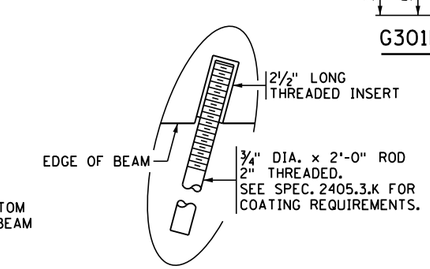

DETAIL "A"

REVISED: OCTOBER 22, 2019

APPROVED: JANUARY 13, 2015

Nancy Daubenberger
STATE BRIDGE ENGINEER

CERTIFIED BY _____ LICENSED PROFESSIONAL ENGINEER _____ DATE

NAME: LIC. NO.

TITLE: 36" PRESTRESSED CONCRETE BEAM (PRETENSIONED) 36M-

BEAMS

DES: DR: CHK: CHK:

APPROVED:

SHEET NO. OF SHEETS

FIG. 5-397.505

BRIDGE NO.

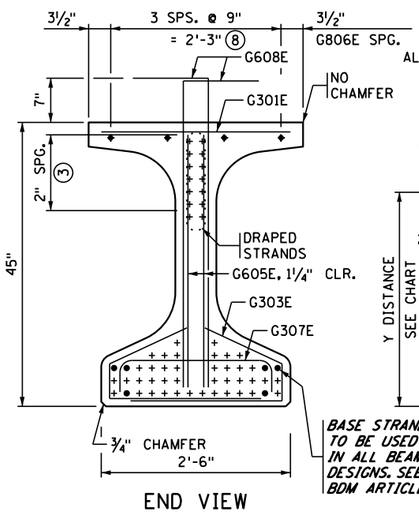

END VIEW

CUT STRANDS FLUSH WITH CONCRETE. COVER ENDS WITH SEALANT PER APPROVED PRODUCTS LIST "BRIDGE-PRESTRESSED BEAMS-CUT STRAND SEALANT."

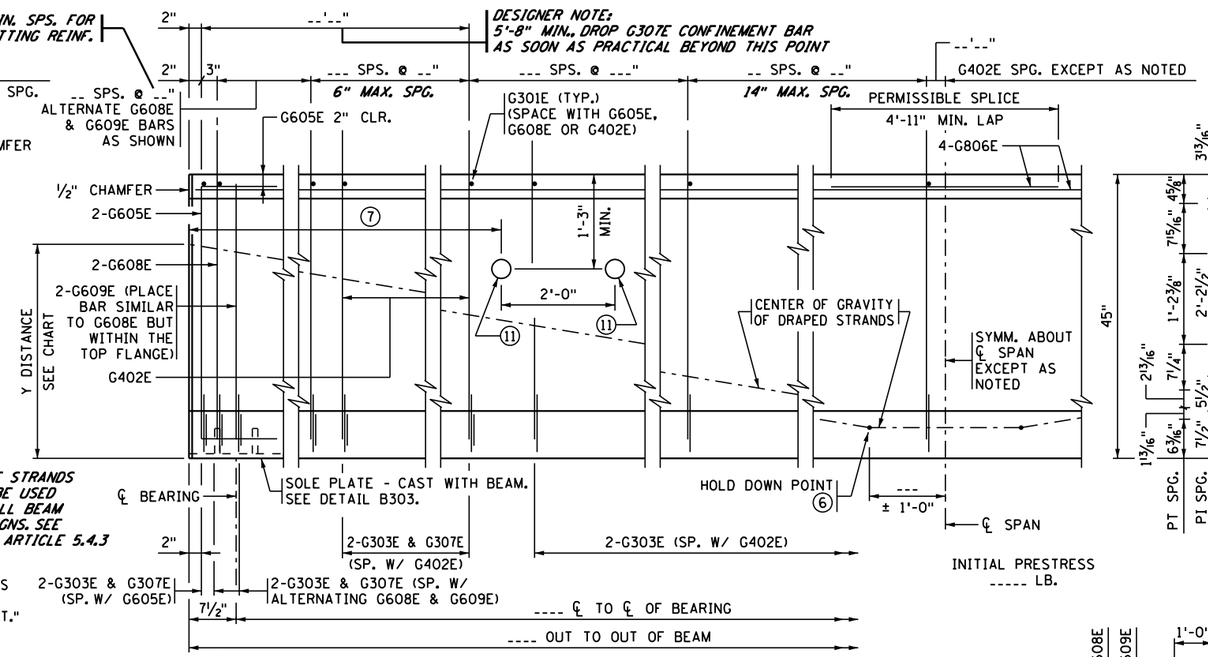

BEAM ELEVATION

TEXT IN ITALICS ARE DESIGNER NOTES. REMOVE PRIOR TO PLOTTING FINAL PLAN.

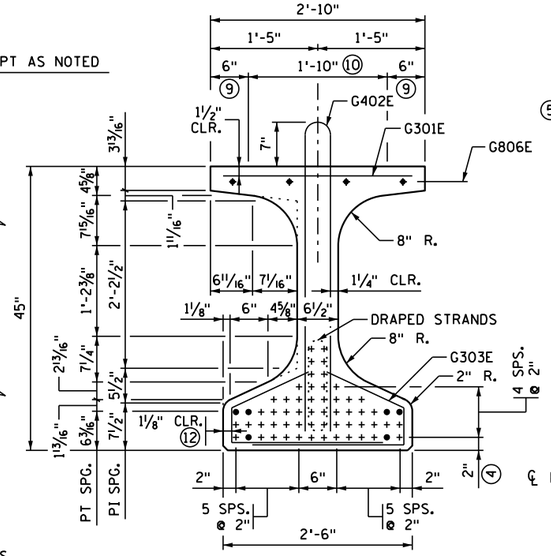

SECTION AT ℄ SPAN

Y DISTANCES (INCHES)			
	NO.	℄ SPAN	END
STRAIGHT STRANDS	----	----	
DRAPED STRANDS	----	----	---- ▫
(5) TOTAL STRANDS	----	----	

Y = DISTANCE TO CENTER OF GRAVITY OF STRANDS FROM BOTTOM OF BEAM. ALL STRANDS SPACED 2" CENTER TO CENTER, HORIZONTALLY AND VERTICALLY, EXCEPT AS NOTED.

▫ A TOLERANCE OF ± 1" WILL BE PERMITTED IN THIS DIMENSION.

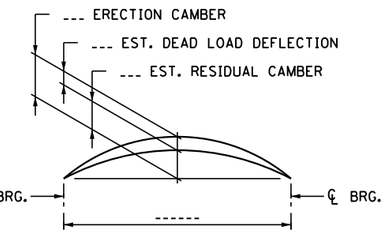

CAMBER DIAGRAM

ERECTION CAMBER SHOWN IS AFTER DIAPHRAGMS ARE IN PLACE.

DEAD LOAD DEFLECTION SHOWN IS FOR WEIGHT OF SLAB, WEARING COURSE, BARRIER, SIDEWALK AND MEDIAN WHERE APPLICABLE.

CONTRACTOR WILL TAKE ELEVATIONS AT TOP OF BEAMS AFTER ERECTION AND WILL ALLOW FOR DEFLECTION SHOWN TO ENABLE BUILDING FORMS TO CORRECT GRADE AND SPECIFIED SLAB THICKNESS. PROVIDE COPY OF ELEVATIONS TO THE ENGINEER.

CALCULATED PRESTRESS LOSSES	
ELASTIC SHORTENING LOSS	--- KSI
LONG TERM LOSSES	--- KSI
TOTAL LOSSES	--- KSI

MINIMUM CONCRETE STRENGTH - KSI	
(1) f'ci	(2) f'c
--- KSI	--- KSI

DESIGNER NOTE: INDICATE MIN. REQUIRED CONCRETE STRENGTH, ROUND CONCRETE STRENGTH TO ONE TENTH KSI.

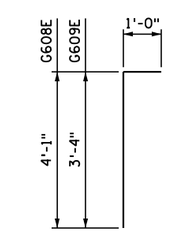

G608E & G609E

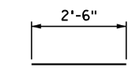

G301E

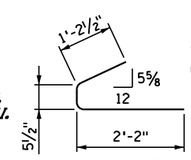

G303E

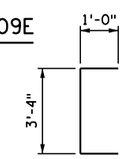

G605E

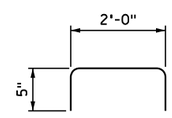

G307E

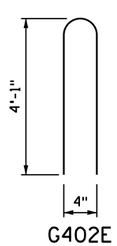

G402E

GENERAL NOTES

PROVIDE HANDLING HOOKS OR DEVICES AS REQUIRED BY CONTRACTOR.

MARK EACH BEAM SHOWING BRIDGE NUMBER, CASTING DATE, AND INDIVIDUAL IDENTIFICATION LETTERS AND NUMBERS ON THE FACE OF THE BEAM, NEAR THE END, SO LOCATED THAT THEY WILL BE EXPOSED AFTER THE END DIAPHRAGMS HAVE BEEN CAST. MARK FASCIA BEAMS ON THE INSIDE FACE. ENSURE ALL MARKINGS ARE STENCILLED AND CLEARLY LEGIBLE. FOR LOCATION OF BEAMS, SEE FRAMING PLAN.

ALL MATERIAL AND WORK SHOWN OR NOTED ON THIS SHEET IS INCLUDED IN UNIT PRICE BID FOR PRESTRESSED CONCRETE BEAMS. SEE SPEC. 2405.

SEE FRAMING PLAN FOR BEAM END MARKED "X" AND DIAPHRAGM SPACING.

AS AN ALTERNATE TO THE END DIAPHRAGM ANCHORAGES SHOWN, THE CONTRACTOR MAY SUBMIT DETAILS OF A CAST-IN-PLACE ANCHORAGE TO THE ENGINEER FOR APPROVAL. ANCHORAGE MUST PROVIDE AN ULTIMATE PULL OUT STRENGTH OF 15 KIPS PER ANCHORAGE.

APPLY AN APPROVED SEALER TO THE SIDES OF THE BEAM NEAR EACH END PER THE SPECIAL PROVISIONS.

(1) MINIMUM CONCRETE STRENGTH AT TIME OF PRESTRESS TRANSFER.

(2) MINIMUM CONCRETE STRENGTH WHEN BEAM CAN BE TRANSPORTED AND INSTALLED.

(3) DRAPED STRANDS.

(4) STRAIGHT STRANDS.

(5) USE 0.6" DIA. 7-WIRE LOW RELAXATION PRESTRESSING STRAND, CONFORMING TO ASTM A416, GRADE 270.

(6) CENTER OF GRAVITY OF HOLD DOWNS WHEN MULTIPLE HOLD DOWNS ARE USED.

(7) DIMENSION DETERMINED BY CONTRACTOR. MAINTAIN 2" MINIMUM CLEAR FROM STRANDS.

(8) TWO INSIDE BARS MAY BE PLACED ADJACENT TO VERTICAL STIRRUP FOR TYING CONVENIENCE.

(9) STEEL TROWEL TO SMOOTH FINISH AND APPLY BOND BREAKER PER APPROVED PRODUCTS LIST.

(10) ROUGH FLOAT AND BROOM TRANSVERSELY FOR BOND IN ACCORDANCE WITH SPEC. 2405.3.D.

(11) OPTIONAL: 3" MAX. DIA. SLEEVE FOR HAULING (AFTER INSTALLATION, COAT WITH APPROVED EPOXY BONDING AGENT & FILL WITH APPROVED NON-SHRINK GROUT).

(12) TYP. CLR. FOR ENTIRE BOTTOM FLANGE.

DESIGNER NOTE: MIN. DISTANCE BETWEEN THREADED INSERT AND END OF BEAM IS 3".

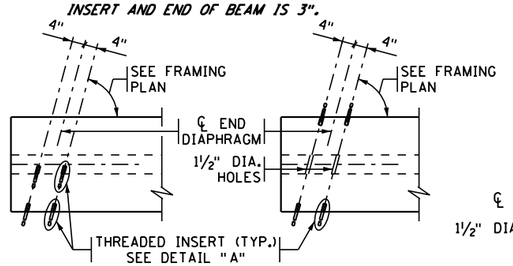

PLAN AT FASCIA BEAMS

PLAN AT INTERIOR BEAMS

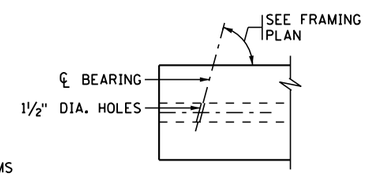

PLAN

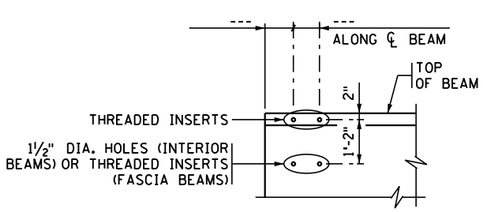

ELEVATION

CONCRETE END DIAPHRAGM

PARAPET ABUTMENT
(SEE DETAIL B814 FOR DIAPHRAGM DETAILS)

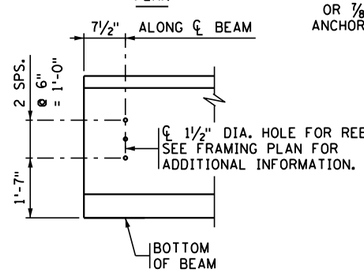

ELEVATION

CONCRETE END DIAPHRAGM

INTEGRAL & SEMI-INTEGRAL ABUTMENT. SEE SUPERSTRUCTURE DETAILS AND REINFORCEMENT FOR DIAPHRAGM DETAILS.

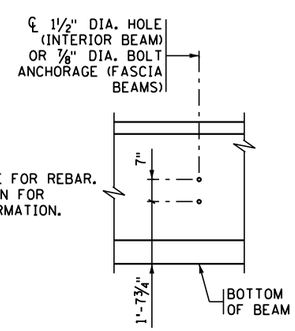

ELEVATION

STEEL INTERMEDIATE DIAPHRAGM

(SEE DETAIL B403 FOR DIAPHRAGM DETAILS)

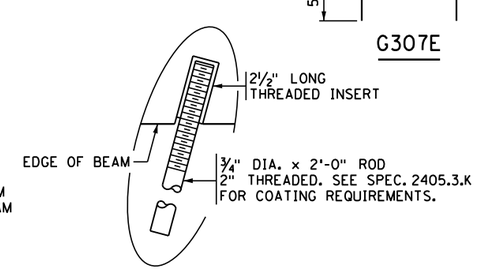

DETAIL "A"

REVISED: OCTOBER 22, 2019

APPROVED: JANUARY 13, 2015

Nancy Daubenberger
STATE BRIDGE ENGINEER

CERTIFIED BY _____ LICENSED PROFESSIONAL ENGINEER _____ DATE

NAME: LIC. NO.

TITLE: MN45" PRESTRESSED CONCRETE BEAM (PRETENSIONED) MN45-

BEAMS

FIG. 5-397.507

DES:	DR:	APPROVED:	BRIDGE NO.
CHK:	CHK:		
SHEET NO.	OF	SHEETS	

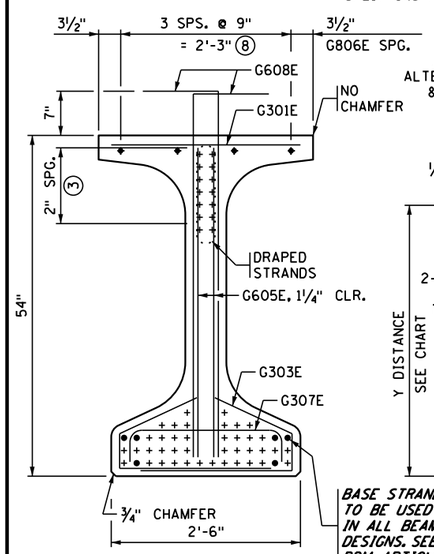

END VIEW

CUT STRANDS FLUSH WITH CONCRETE. COVER ENDS WITH SEALANT PER APPROVED PRODUCTS LIST "BRIDGE-PRESTRESSED BEAMS-CUT STRAND SEALANT."

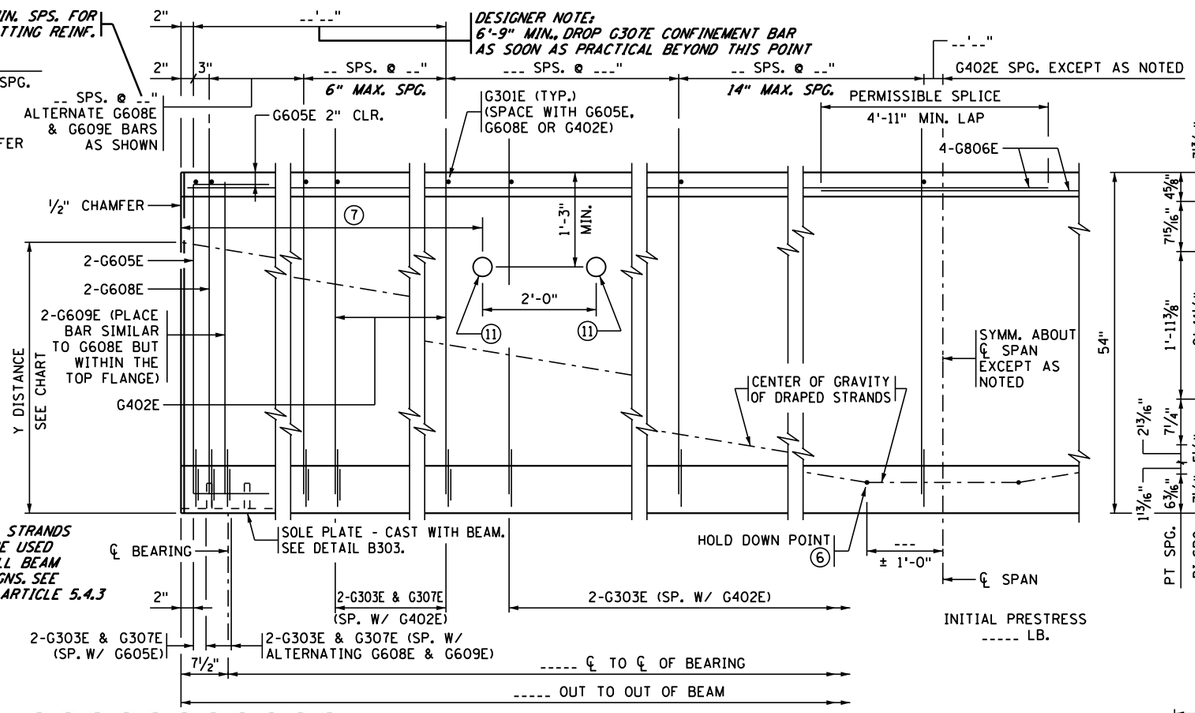

BEAM ELEVATION

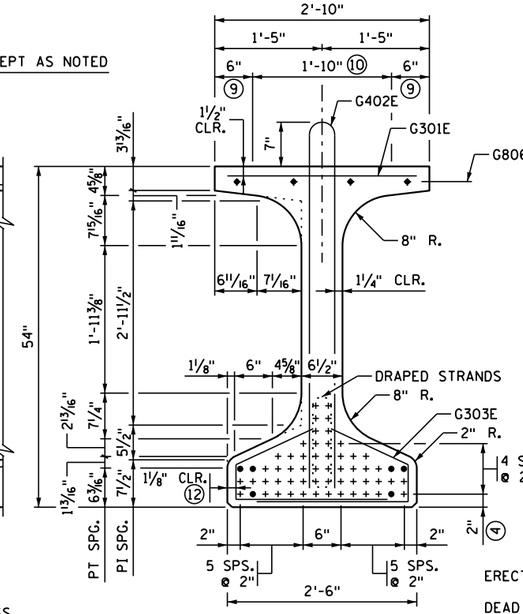

SECTION AT ℄ SPAN

Y DISTANCES (INCHES)			
	NO.	℄ SPAN	END
STRAIGHT STRANDS	---	---	
DRAPED STRANDS	---	---	--- ▫
(5) TOTAL STRANDS	---	---	

Y = DISTANCE TO CENTER OF GRAVITY OF STRANDS FROM BOTTOM OF BEAM. ALL STRANDS SPACED 2" CENTER TO CENTER, HORIZONTALLY AND VERTICALLY, EXCEPT AS NOTED.

▫ A TOLERANCE OF ± 1" WILL BE PERMITTED IN THIS DIMENSION.

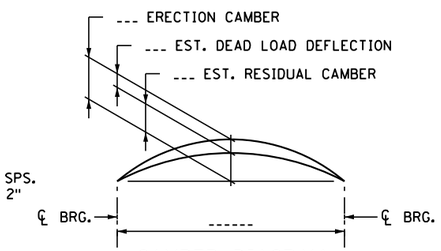

CAMBER DIAGRAM

ERECTION CAMBER SHOWN IS AFTER DIAPHRAGMS ARE IN PLACE.

DEAD LOAD DEFLECTION SHOWN IS FOR WEIGHT OF SLAB, WEARING COURSE, BARRIER, SIDEWALK AND MEDIAN WHERE APPLICABLE.

CONTRACTOR WILL TAKE ELEVATIONS AT TOP OF BEAMS AFTER ERECTION AND WILL ALLOW FOR DEFLECTION SHOWN TO ENABLE BUILDING FORMS TO CORRECT GRADE AND SPECIFIED SLAB THICKNESS. PROVIDE COPY OF ELEVATIONS TO THE ENGINEER.

TEXT IN ITALICS ARE DESIGNER NOTES. REMOVE PRIOR TO PLOTTING FINAL PLAN.

DESIGNER NOTE: MIN. DISTANCE BETWEEN THREADED INSERT AND END OF BEAM IS 3".

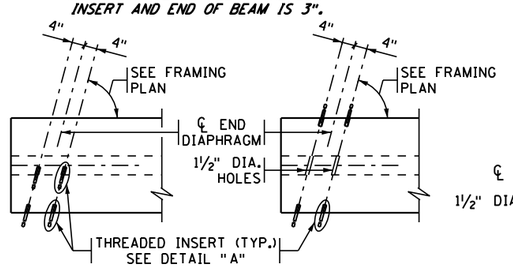

PLAN AT FASCIA BEAMS

PLAN AT INTERIOR BEAMS

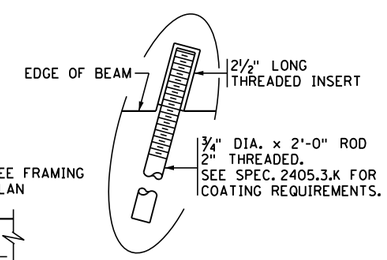

DETAIL "A"

CALCULATED PRESTRESS LOSSES	
ELASTIC SHORTENING LOSS	--- KSI
LONG TERM LOSSES	--- KSI
TOTAL LOSSES	--- KSI

MINIMUM CONCRETE STRENGTH - KSI	
(1) f'ci	(2) f'c
--- KSI	--- KSI

DESIGNER NOTE: INDICATE MIN. REQUIRED CONCRETE STRENGTH, ROUND CONCRETE STRENGTH TO ONE TENTH KSI.

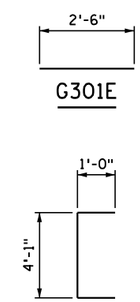

G301E

G605E

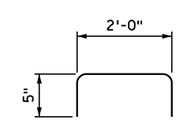

G307E

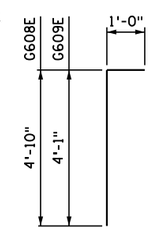

G608E & G609E

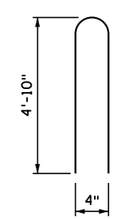

G402E

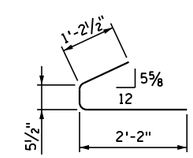

G303E

GENERAL NOTES

PROVIDE HANDLING HOOKS OR DEVICES AS REQUIRED BY CONTRACTOR.

MARK EACH BEAM SHOWING BRIDGE NUMBER, CASTING DATE, AND INDIVIDUAL IDENTIFICATION LETTERS AND NUMBERS ON THE FACE OF THE BEAM, NEAR THE END, SO LOCATED THAT THEY WILL BE EXPOSED AFTER THE END DIAPHRAGMS HAVE BEEN CAST. MARK FASCIA BEAMS ON THE INSIDE FACE. ENSURE ALL MARKINGS ARE STENCILLED AND CLEARLY LEGIBLE. FOR LOCATION OF BEAMS, SEE FRAMING PLAN.

ALL MATERIAL AND WORK SHOWN OR NOTED ON THIS SHEET IS INCLUDED IN UNIT PRICE BID FOR PRESTRESSED CONCRETE BEAMS. SEE SPEC. 2405.

SEE FRAMING PLAN FOR BEAM END MARKED "X" AND DIAPHRAGM SPACING.

AS AN ALTERNATE TO THE END DIAPHRAGM ANCHORAGES SHOWN, THE CONTRACTOR MAY SUBMIT DETAILS OF A CAST-IN-PLACE ANCHORAGE TO THE ENGINEER FOR APPROVAL. ANCHORAGE MUST PROVIDE AN ULTIMATE PULL OUT STRENGTH OF 15 KIPS PER ANCHORAGE.

APPLY AN APPROVED SEALER TO THE SIDES OF THE BEAM NEAR EACH END PER THE SPECIAL PROVISIONS.

(1) MINIMUM CONCRETE STRENGTH AT TIME OF PRESTRESS TRANSFER.
(2) MINIMUM CONCRETE STRENGTH WHEN BEAM CAN BE TRANSPORTED AND INSTALLED.
(3) DRAPED STRANDS.
(4) STRAIGHT STRANDS.
(5) USE 0.6" DIA. 7-WIRE LOW RELAXATION PRESTRESSING STRAND, CONFORMING TO ASTM A416, GRADE 270.
(6) CENTER OF GRAVITY OF HOLD DOWNS WHEN MULTIPLE HOLD DOWNS ARE USED.
(7) DIMENSION DETERMINED BY CONTRACTOR. MAINTAIN 2" MINIMUM CLEAR FROM STRANDS.
(8) TWO INSIDE BARS MAY BE PLACED ADJACENT TO VERTICAL STIRRUP FOR TYING CONVENIENCE.
(9) STEEL TROWEL TO SMOOTH FINISH AND APPLY BOND BREAKER PER APPROVED PRODUCTS LIST.
(10) ROUGH FLOAT AND BROOM TRANSVERSELY FOR BOND IN ACCORDANCE WITH SPEC. 2405.3.D.
(11) OPTIONAL: 3" MAX. DIA. SLEEVE FOR HAULING (AFTER INSTALLATION, COAT WITH APPROVED EPOXY BONDING AGENT & FILL WITH APPROVED NON-SHRINK GROUT).
(12) TYP. CLR. FOR ENTIRE BOTTOM FLANGE.

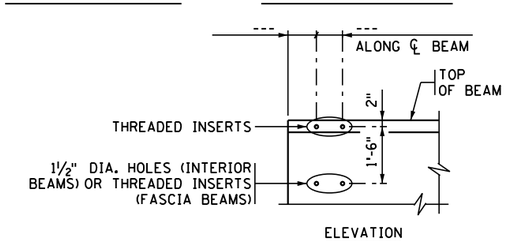

ELEVATION

CONCRETE END DIAPHRAGM

PARAPET ABUTMENT
(SEE DETAIL B814 FOR DIAPHRAGM DETAILS)

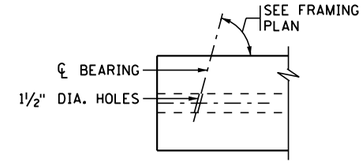

PLAN

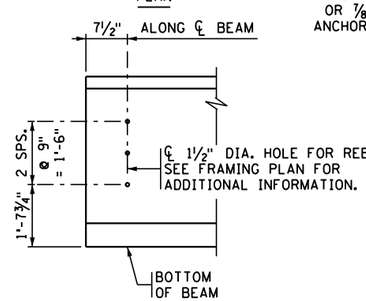

ELEVATION

CONCRETE END DIAPHRAGM

INTEGRAL & SEMI-INTEGRAL ABUTMENT. SEE SUPERSTRUCTURE DETAILS AND REINFORCEMENT FOR DIAPHRAGM DETAILS.

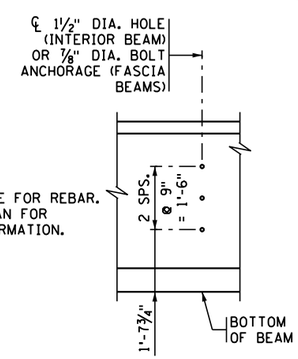

ELEVATION

STEEL INTERMEDIATE DIAPHRAGM

(SEE DETAIL B403 FOR DIAPHRAGM DETAILS)

REVISED: OCTOBER 22, 2019

APPROVED: JANUARY 13, 2015

Nancy Daubenberger
STATE BRIDGE ENGINEER

CERTIFIED BY _____ LICENSED PROFESSIONAL ENGINEER _____ DATE

NAME: LIC. NO.

TITLE: MN54" PRESTRESSED CONCRETE BEAM (PRETENSIONED) MN54-

BEAMS

DES:	DR:	APPROVED:
CHK:	CHK:	

SHEET NO. OF SHEETS

FIG. 5-397.508

BRIDGE NO.

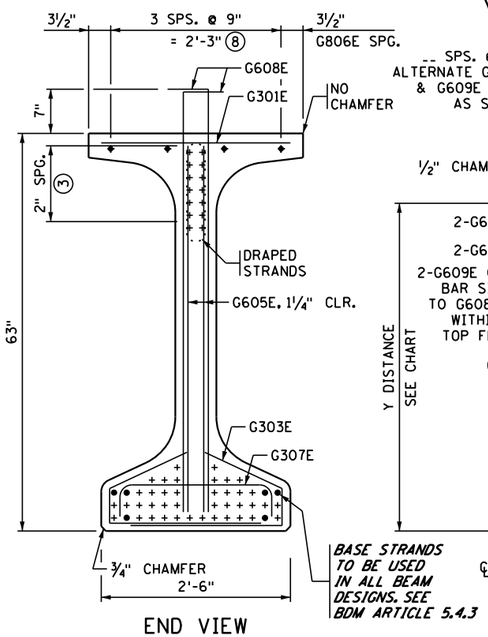

END VIEW

CUT STRANDS FLUSH WITH CONCRETE. COVER ENDS WITH SEALANT PER APPROVED PRODUCTS LIST "BRIDGE-PRESTRESSED BEAMS-CUT STRAND SEALANT."

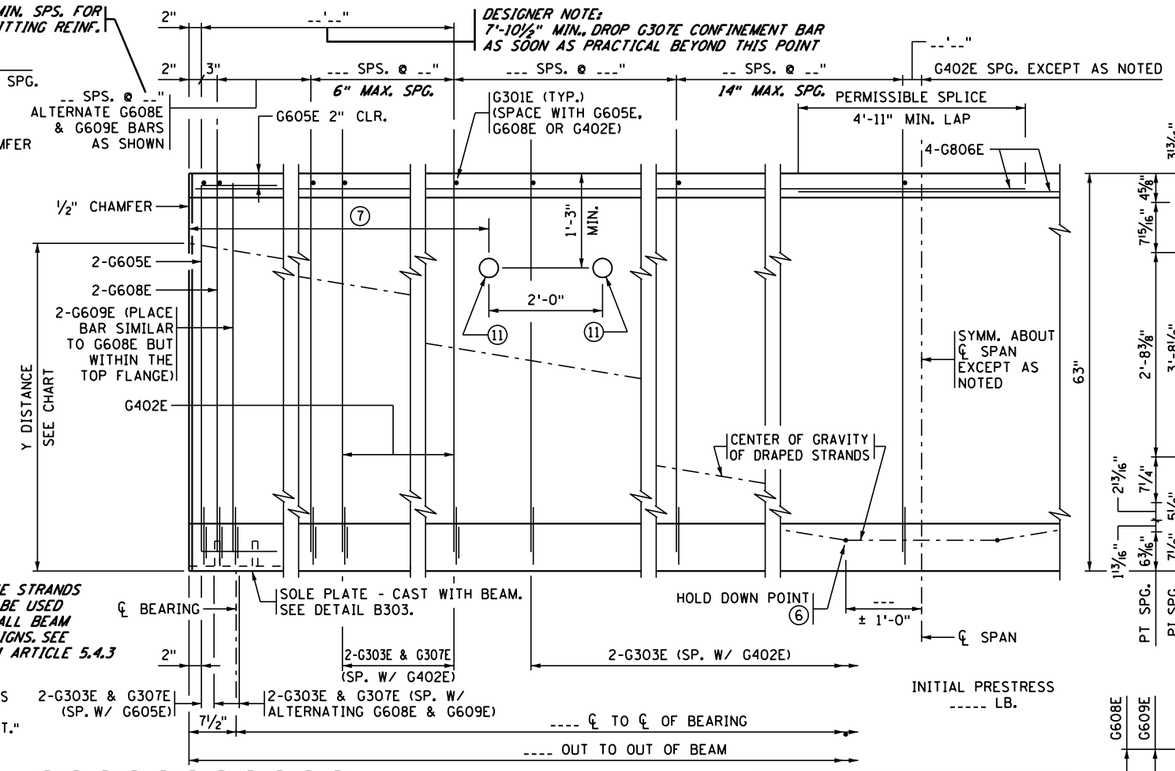

INITIAL PRESTRESS
----- LB.

BEAM ELEVATION

TEXT IN ITALICS ARE DESIGNER NOTES. REMOVE PRIOR TO PLOTTING FINAL PLAN.

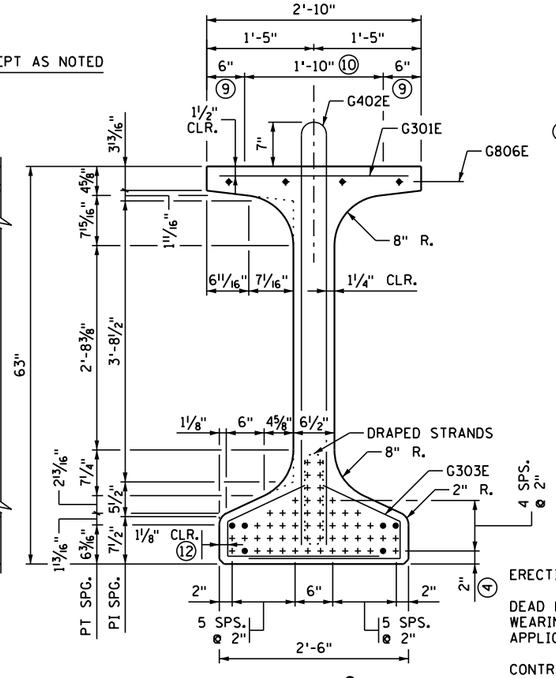

SECTION AT ℄ SPAN

Y DISTANCES (INCHES)			
	NO.	℄ SPAN	END
STRAIGHT STRANDS	---	---	
DRAPED STRANDS	---	---	--- ▫
(5) TOTAL STRANDS	---	---	

Y = DISTANCE TO CENTER OF GRAVITY OF STRANDS FROM BOTTOM OF BEAM. ALL STRANDS SPACED 2" CENTER TO CENTER, HORIZONTALLY AND VERTICALLY, EXCEPT AS NOTED.

▫ A TOLERANCE OF ± 1" WILL BE PERMITTED IN THIS DIMENSION.

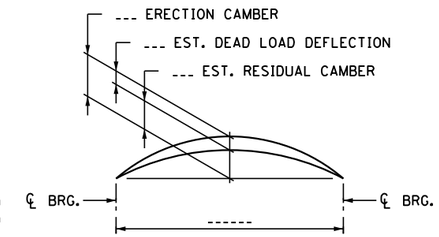

CAMBER DIAGRAM

ERECTION CAMBER SHOWN IS AFTER DIAPHRAGMS ARE IN PLACE.

DEAD LOAD DEFLECTION SHOWN IS FOR WEIGHT OF SLAB, WEARING COURSE, BARRIER, SIDEWALK AND MEDIAN WHERE APPLICABLE.

CONTRACTOR WILL TAKE ELEVATIONS AT TOP OF BEAMS AFTER ERECTION AND WILL ALLOW FOR DEFLECTION SHOWN TO ENABLE BUILDING FORMS TO CORRECT GRADE AND SPECIFIED SLAB THICKNESS. PROVIDE COPY OF ELEVATIONS TO THE ENGINEER.

GENERAL NOTES

PROVIDE HANDLING HOOKS OR DEVICES AS REQUIRED BY CONTRACTOR.

MARK EACH BEAM SHOWING BRIDGE NUMBER, CASTING DATE, AND INDIVIDUAL IDENTIFICATION LETTERS AND NUMBERS ON THE FACE OF THE BEAM, NEAR THE END, SO LOCATED THAT THEY WILL BE EXPOSED AFTER THE END DIAPHRAGMS HAVE BEEN CAST. MARK FASCIA BEAMS ON THE INSIDE FACE. ENSURE ALL MARKINGS ARE STENCILLED AND CLEARLY LEGIBLE. FOR LOCATION OF BEAMS, SEE FRAMING PLAN.

ALL MATERIAL AND WORK SHOWN OR NOTED ON THIS SHEET IS INCLUDED IN UNIT PRICE BID FOR PRESTRESSED CONCRETE BEAMS. SEE SPEC. 2405.

SEE FRAMING PLAN FOR BEAM END MARKED "X" AND DIAPHRAGM SPACING.

AS AN ALTERNATE TO THE END DIAPHRAGM ANCHORAGES SHOWN, THE CONTRACTOR MAY SUBMIT DETAILS OF A CAST-IN-PLACE ANCHORAGE TO THE ENGINEER FOR APPROVAL. ANCHORAGE MUST PROVIDE AN ULTIMATE PULL OUT STRENGTH OF 15 KIPS PER ANCHORAGE.

APPLY AN APPROVED SEALER TO THE SIDES OF THE BEAM NEAR EACH END PER THE SPECIAL PROVISIONS.

(1) MINIMUM CONCRETE STRENGTH AT TIME OF PRESTRESS TRANSFER.

(2) MINIMUM CONCRETE STRENGTH WHEN BEAM CAN BE TRANSPORTED AND INSTALLED.

(3) DRAPED STRANDS.

(4) STRAIGHT STRANDS.

(5) USE 0.6" DIA. 7-WIRE LOW RELAXATION PRESTRESSING STRAND, CONFORMING TO ASTM A416, GRADE 270.

(6) CENTER OF GRAVITY OF HOLD DOWNS WHEN MULTIPLE HOLD DOWNS ARE USED.

(7) DIMENSION DETERMINED BY CONTRACTOR. MAINTAIN 2" MINIMUM CLEAR FROM STRANDS.

(8) TWO INSIDE BARS MAY BE PLACED ADJACENT TO VERTICAL STIRRUP FOR TYING CONVENIENCE.

(9) STEEL TROWEL TO SMOOTH FINISH AND APPLY BOND BREAKER PER APPROVED PRODUCTS LIST.

(10) ROUGH FLOAT AND BROOM TRANSVERSELY FOR BOND IN ACCORDANCE WITH SPEC. 2405.3.D.

(11) OPTIONAL: 3" MAX. DIA. SLEEVE FOR HAULING (AFTER INSTALLATION, COAT WITH APPROVED EPOXY BONDING AGENT & FILL WITH APPROVED NON-SHRINK GROUT).

(12) TYP. CLR. FOR ENTIRE BOTTOM FLANGE.

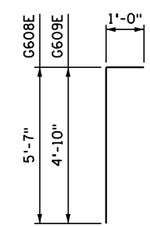

G608E & G609E

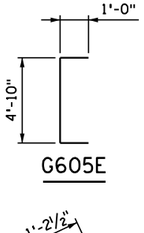

G402E

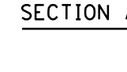

G301E

G605E

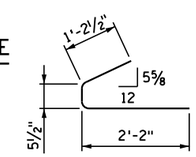

G303E

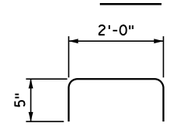

G307E

CALCULATED PRESTRESS LOSSES	
ELASTIC SHORTENING LOSS	--- KSI
LONG TERM LOSSES	--- KSI
TOTAL LOSSES	--- KSI

MINIMUM CONCRETE STRENGTH - KSI	
(1) f'ci	(2) f'c
--- KSI	--- KSI

DESIGNER NOTE: INDICATE MIN. REQUIRED CONCRETE STRENGTH, ROUND CONCRETE STRENGTH TO ONE TENTH KSI.

DESIGNER NOTE: MIN. DISTANCE BETWEEN THREADED INSERT AND END OF BEAM IS 3".

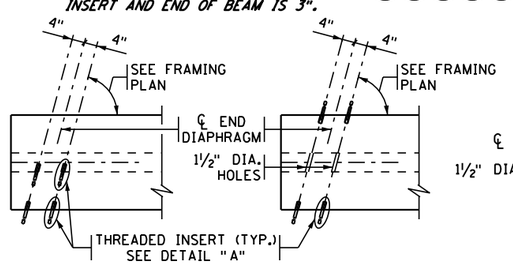

PLAN AT FASCIA BEAMS

PLAN AT INTERIOR BEAMS

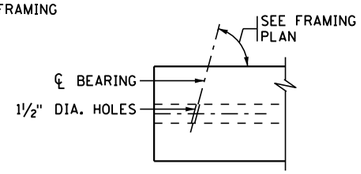

PLAN

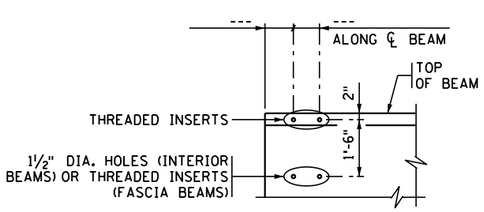

ELEVATION

CONCRETE END DIAPHRAGM

PARAPET ABUTMENT
(SEE DETAIL B814 FOR DIAPHRAGM DETAILS)

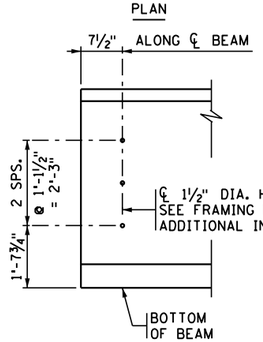

ELEVATION

CONCRETE END DIAPHRAGM

INTEGRAL & SEMI-INTEGRAL ABUTMENT. SEE SUPERSTRUCTURE DETAILS AND REINFORCEMENT FOR DIAPHRAGM DETAILS.

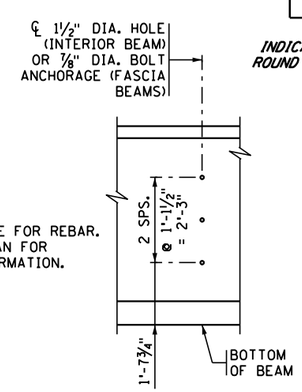

ELEVATION

STEEL INTERMEDIATE DIAPHRAGM

(SEE DETAIL B403 FOR DIAPHRAGM DETAILS)

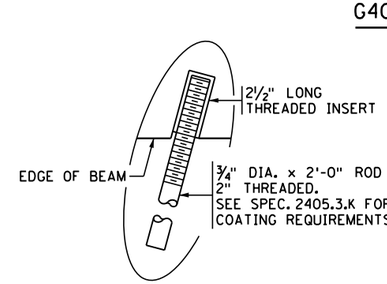

DETAIL "A"

REVISED: OCTOBER 22, 2019

APPROVED: JANUARY 13, 2015

Nancy Daubenberger
STATE BRIDGE ENGINEER

CERTIFIED BY _____ _____
LICENSED PROFESSIONAL ENGINEER

NAME: LIC. NO.

TITLE: MN63" PRESTRESSED CONCRETE BEAM (PRETENSIONED) MN63-

BEAMS

DES:	DR:	APPROVED:
CHK:	CHK:	
SHEET NO. OF SHEETS		

FIG. 5-397.509

BRIDGE NO.

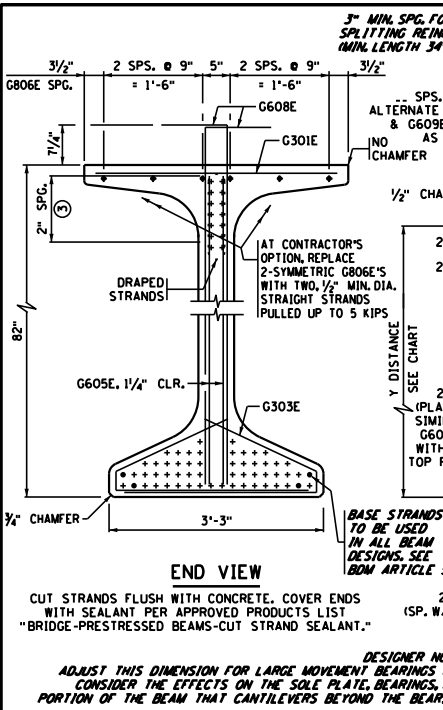

END VIEW

CUT STRANDS FLUSH WITH CONCRETE. COVER ENDS WITH SEALANT PER APPROVED PRODUCTS LIST "BRIDGE-PRESTRESSED BEAMS-CUT STRAND SEALANT."

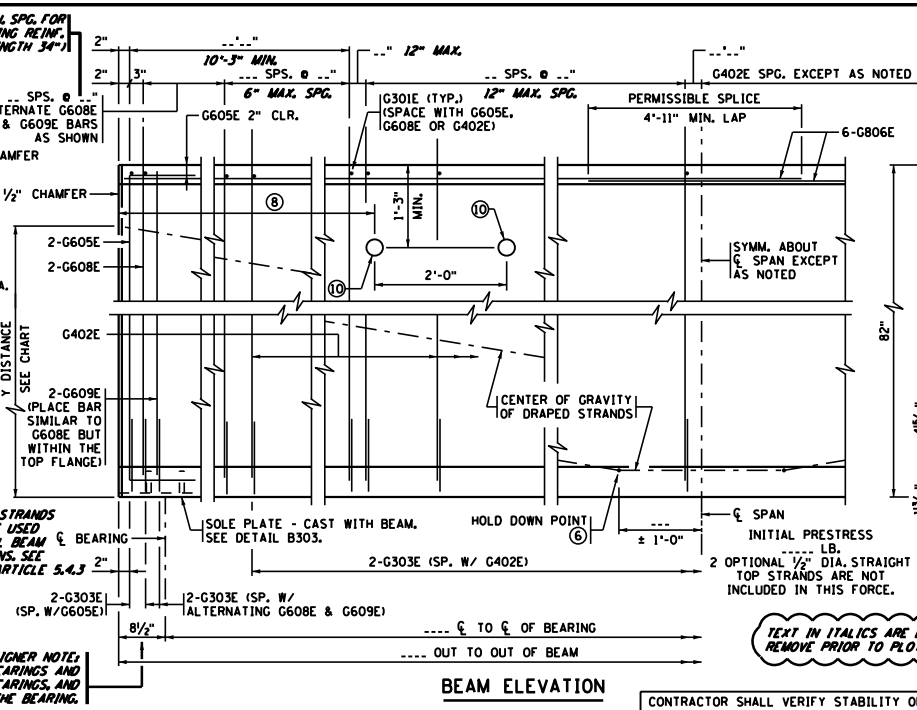

DESIGNER NOTE: ADJUST THIS DIMENSION FOR LARGE MOVEMENT BEARINGS AND CONSIDER THE EFFECTS ON THE SOLE PLATE, BEARINGS, AND PORTION OF THE BEAM THAT CANTILEVERS BEYOND THE BEARING.

BEAM ELEVATION

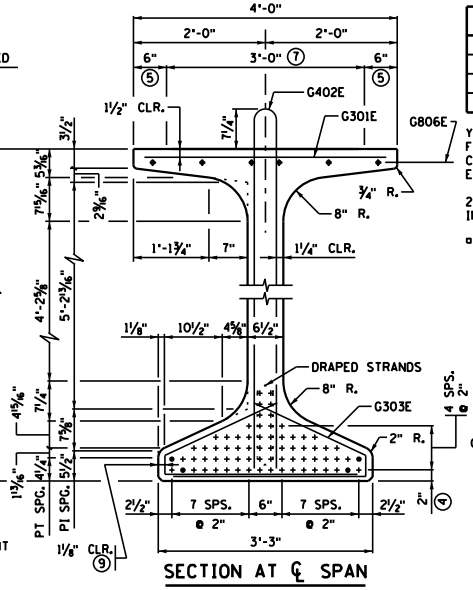

SECTION AT ℄ SPAN

Y DISTANCES (INCHES)	NO.	℄ SPAN	END
STRAIGHT STRANDS	---	---	
DRAPED STRANDS	---	---	--- ▫
TOTAL STRANDS	---	---	

Y = DISTANCE TO CENTER OF GRAVITY OF STRANDS FROM BOTTOM OF BEAM. ALL STRANDS SPACED 2" CENTER TO CENTER, HORIZONTALLY AND VERTICALLY, EXCEPT AS NOTED.

2 OPTIONAL ½" DIA. STRAIGHT STRANDS ARE NOT INCLUDED IN THIS TABLE.

▫ A TOLERANCE OF ± 1" WILL BE PERMITTED IN THIS DIMENSION.

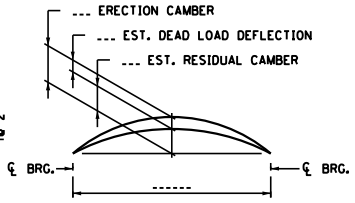

CAMBER DIAGRAM

ERECTION CAMBER SHOWN IS AFTER DIAPHRAGMS ARE IN PLACE.

DEAD LOAD DEFLECTION SHOWN IS FOR WEIGHT OF SLAB, WEARING COURSE, BARRIER, SIDEWALK AND MEDIAN WHERE APPLICABLE.

CONTRACTOR WILL TAKE ELEVATIONS AT TOP OF BEAMS AFTER ERECTION AND WILL ALLOW FOR DEFLECTION SHOWN TO ENABLE BUILDING FORMS TO CORRECT GRADE AND SPECIFIED SLAB THICKNESS. PROVIDE COPY OF ELEVATIONS TO THE ENGINEER.

TEXT IN ITALICS ARE DESIGNER NOTES. REMOVE PRIOR TO PLOTTING FINAL PLAN.

CONTRACTOR SHALL VERIFY STABILITY OF FASCIA BEAMS FROM OVERTURNING DUE TO DECK PLACEMENT OPERATIONS. CONTRACTOR SHALL PROVIDE TEMPORARY BRACING.

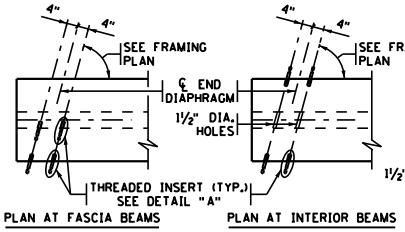

DESIGNER NOTE: MIN. DISTANCE BETWEEN THREADED INSERT AND END OF BEAM IS 3".

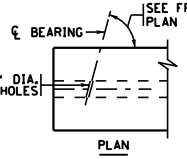

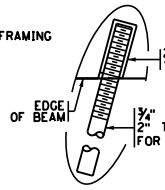

DETAIL "A"

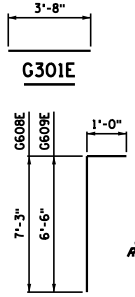

G301E

G608E & G609E

CALCULATED PRESTRESS LOSSES	
ELASTIC SHORTENING LOSS	--- KSI
LONG TERM LOSSES	--- KSI
TOTAL LOSSES	--- KSI

MINIMUM CONCRETE STRENGTH - KSI	
① f'ci	② f'c
--- KSI	--- KSI

DESIGNER NOTE: INDICATE MIN. REQUIRED CONCRETE STRENGTH, ROUND CONCRETE STRENGTH TO ONE TENTH KSI.

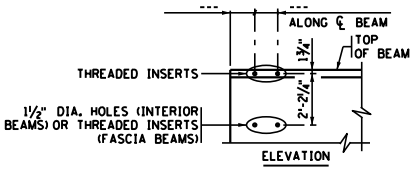

CONCRETE END DIAPHRAGM

PARAPET ABUTMENT
(SEE DETAIL B814 FOR DIAPHRAGM DETAILS)

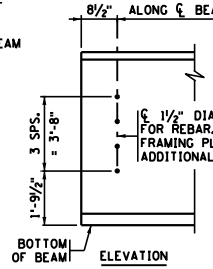

CONCRETE END DIAPHRAGM

SEMI-INTEGRAL ABUTMENT
SEE SUPERSTRUCTURE DETAILS AND REINFORCEMENT FOR DIAPHRAGM DETAILS.

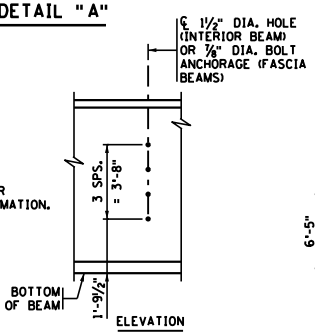

STEEL INTERMEDIATE DIAPHRAGM

(SEE DETAIL B412 FOR DIAPHRAGM DETAILS)

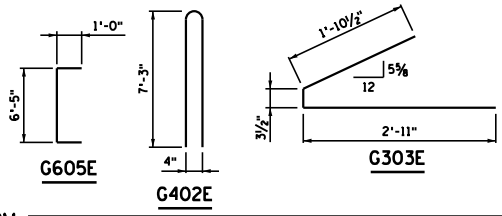

G605E G402E G303E

GENERAL NOTES

PROVIDE HANDLING HOOKS OR DEVICES AS REQUIRED BY CONTRACTOR.

MARK EACH BEAM SHOWING BRIDGE NUMBER, CASTING DATE, AND INDIVIDUAL IDENTIFICATION LETTERS AND NUMBERS ON THE FACE OF THE BEAM, NEAR THE END, SO LOCATED THAT THEY WILL BE EXPOSED AFTER THE END DIAPHRAGMS HAVE BEEN CAST. MARK FASCIA BEAMS ON THE INSIDE FACE. ENSURE ALL MARKINGS ARE STENCILLED AND CLEARLY LEGIBLE. FOR LOCATION OF BEAMS, SEE FRAMING PLAN.

ALL MATERIAL AND WORK SHOWN OR NOTED ON THIS SHEET IS INCLUDED IN UNIT PRICE BID FOR PRESTRESSED CONCRETE BEAMS. SEE SPEC. 2405.

SEE FRAMING PLAN FOR BEAM END MARKED "X" AND DIAPHRAGM SPACING.

AS AN ALTERNATE TO THE END DIAPHRAGM ANCHORAGES SHOWN, THE CONTRACTOR MAY SUBMIT DETAILS OF A CAST-IN-PLACE ANCHORAGE TO THE ENGINEER FOR APPROVAL. ANCHORAGE MUST PROVIDE AN ULTIMATE PULL OUT STRENGTH OF 24 KIPS PER ANCHORAGE.

USE 0.6" DIA. 7-WIRE LOW RELAXATION PRESTRESSING STRAND, CONFORMING TO ASTM A416, GRADE 270.

APPLY AN APPROVED SEALER TO THE SIDES OF THE BEAM NEAR EACH END PER THE SPECIAL PROVISIONS.

① MINIMUM CONCRETE STRENGTH AT TIME OF PRESTRESS TRANSFER.

② MINIMUM CONCRETE STRENGTH WHEN BEAM CAN BE TRANSPORTED AND INSTALLED.

③ DRAPED STRANDS.

④ STRAIGHT STRANDS.

⑤ STEEL TROWEL TO SMOOTH FINISH AND APPLY BOND BREAKER PER APPROVED PRODUCTS LIST.

⑥ CENTER OF GRAVITY OF HOLD DOWNS WHEN MULTIPLE HOLD DOWNS ARE USED.

⑦ ROUGH FLOAT AND BROOM TRANSVERSELY FOR BOND IN ACCORDANCE WITH SPEC. 2405.3D.

⑧ DIMENSION DETERMINED BY CONTRACTOR. MAINTAIN 2" MINIMUM CLEAR FROM STRANDS.

⑨ TYP. CLR. FOR ENTIRE BOTTOM FLANGE.

⑩ OPTIONAL: 3" MAX. DIA. SLEEVE FOR HAULING (AFTER INSTALLATION, COAT WITH APPROVED EPOXY BONDING AGENT & FILL WITH APPROVED NON-SHRINK GROUT).

REVISED: JUNE 12, 2019

APPROVED: JANUARY 13, 2015
Nancy Daubenberger
STATE BRIDGE ENGINEER

BEAMS

FIG. 5-397.531

CERTIFIED BY
LICENSED PROFESSIONAL ENGINEER DATE
NAME: LIC. NO.

TITLE: 82MW PRESTRESSED CONCRETE BEAM (PRETENSIONED) 82MW-

DES: DR: CHK: CHK:

APPROVED:

SHEET NO. OF SHEETS

BRIDGE NO.

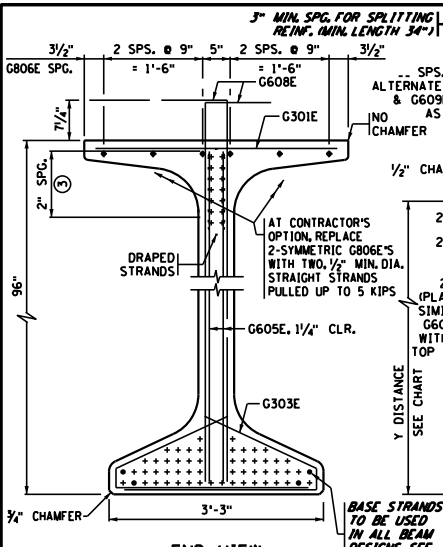

END VIEW

CUT STRANDS FLUSH WITH CONCRETE. COVER ENDS WITH SEALANT PER APPROVED PRODUCTS LIST "BRIDGE-PRESTRESSED BEAMS-CUT STRAND SEALANT."

BASE STRANDS TO BE USED IN ALL BEAM DESIGNS. SEE BDM ARTICLE 5.4.3

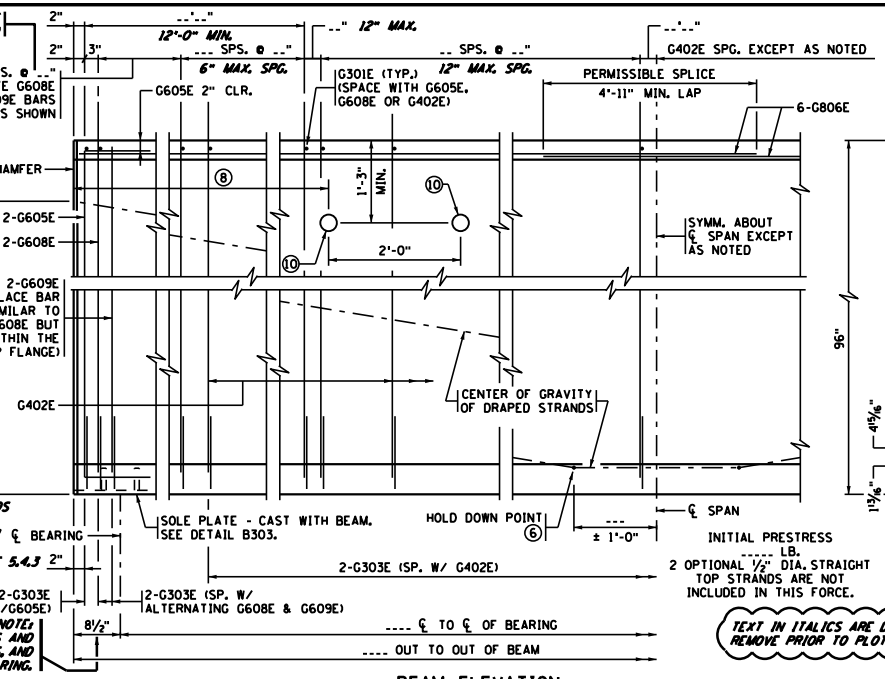

INITIAL PRESTRESS ---- LB.
2 OPTIONAL ½" DIA. STRAIGHT TOP STRANDS ARE NOT INCLUDED IN THIS FORCE.

BEAM ELEVATION

TEXT IN ITALICS ARE DESIGNER NOTES. REMOVE PRIOR TO PLOTTING FINAL PLAN.

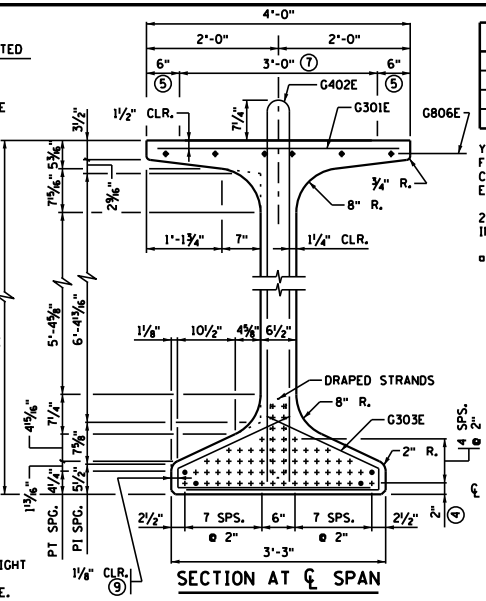

SECTION AT ℄ SPAN

Y DISTANCES (INCHES)	NO.	℄ SPAN	END
STRAIGHT STRANDS	---	---	☒
DRAPED STRANDS	---	---	--- ▫
TOTAL STRANDS	---	---	☒

Y = DISTANCE TO CENTER OF GRAVITY OF STRANDS FROM BOTTOM OF BEAM. ALL STRANDS SPACED 2" CENTER TO CENTER, HORIZONTALLY AND VERTICALLY, EXCEPT AS NOTED.

2 OPTIONAL ½" DIA. STRAIGHT STRANDS ARE NOT INCLUDED IN THIS TABLE.

▫ A TOLERANCE OF ± 1" WILL BE PERMITTED IN THIS DIMENSION.

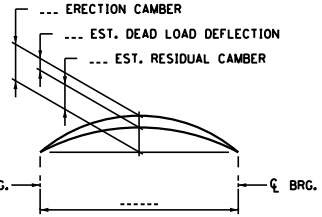

CAMBER DIAGRAM

ERECTION CAMBER SHOWN IS AFTER DIAPHRAGMS ARE IN PLACE.

DEAD LOAD DEFLECTION SHOWN IS FOR WEIGHT OF SLAB, WEARING COURSE, BARRIER, SIDEWALK AND MEDIAN WHERE APPLICABLE.

CONTRACTOR WILL TAKE ELEVATIONS AT TOP OF BEAMS AFTER ERECTION AND WILL ALLOW FOR DEFLECTION SHOWN TO ENABLE BUILDING FORMS TO CORRECT GRADE AND SPECIFIED SLAB THICKNESS. PROVIDE COPY OF ELEVATIONS TO THE ENGINEER.

CONTRACTOR SHALL VERIFY STABILITY OF FASCIA BEAMS FROM OVERTURNING DUE TO DECK PLACEMENT OPERATIONS. CONTRACTOR SHALL PROVIDE TEMPORARY BRACING.

GENERAL NOTES

PROVIDE HANDLING HOOKS OR DEVICES AS REQUIRED BY CONTRACTOR.

MARK EACH BEAM SHOWING BRIDGE NUMBER, CASTING DATE, AND INDIVIDUAL IDENTIFICATION LETTERS AND NUMBERS ON THE FACE OF THE BEAM, NEAR THE END, SO LOCATED THAT THEY WILL BE EXPOSED AFTER THE END DIAPHRAGMS HAVE BEEN CAST. MARK FASCIA BEAMS ON THE INSIDE FACE. INSURE ALL MARKINGS ARE STENCILLED AND CLEARLY LEGIBLE. FOR LOCATION OF BEAMS, SEE FRAMING PLAN.

ALL MATERIAL AND WORK SHOWN OR NOTED ON THIS SHEET IS INCLUDED IN UNIT PRICE BID FOR PRESTRESSED CONCRETE BEAMS. SEE SPEC. 2405.

SEE FRAMING PLAN FOR BEAM END MARKED "X" AND DIAPHRAGM SPACING.

AS AN ALTERNATE TO THE DIAPHRAGM ANCHORAGES SHOWN, THE CONTRACTOR MAY SUBMIT DETAILS OF A CAST-IN-PLACE ANCHORAGE TO THE ENGINEER FOR APPROVAL. ANCHORAGE MUST PROVIDE AN ULTIMATE PULL OUT STRENGTH OF 24 KIPS PER ANCHORAGE.

USE 0.6" DIA. 7-WIRE LOW RELAXATION PRESTRESSING STRAND, CONFORMING TO ASTM A416, GRADE 270.

APPLY AN APPROVED SEALER TO THE SIDES OF THE BEAM NEAR EACH END PER THE SPECIAL PROVISIONS.

(1) MINIMUM CONCRETE STRENGTH AT TIME OF PRESTRESS TRANSFER.

(2) MINIMUM CONCRETE STRENGTH WHEN BEAM CAN BE TRANSPORTED AND INSTALLED.

(3) DRAPED STRANDS.

(4) STRAIGHT STRANDS.

(5) STEEL TROWEL TO SMOOTH FINISH AND APPLY BOND BREAKER PER APPROVED PRODUCTS LIST.

(6) CENTER OF GRAVITY OF HOLD DOWNS WHEN MULTIPLE HOLD DOWNS ARE USED.

(7) ROUGH FLOAT AND BROOM TRANSVERSELY FOR BOND IN ACCORDANCE WITH SPEC. 2405.3D.

(8) DIMENSIONS DETERMINED BY CONTRACTOR. MAINTAIN 2" MINIMUM CLEAR FROM STRANDS.

(9) TYP. CLR. FOR ENTIRE BOTTOM FLANGE.

(10) OPTIONAL: 3" MAX. DIA. SLEEVE FOR HAULING (AFTER INSTALLATION, COAT WITH APPROVED EPOXY BONDING AGENT & FILL WITH APPROVED NON-SHRINK GROUT).

CALCULATED PRESTRESS LOSSES	
ELASTIC SHORTENING LOSS	--- KSI
LONG TERM LOSSES	--- KSI
TOTAL LOSSES	--- KSI

MINIMUM CONCRETE STRENGTH - KSI	
(1) f'ci	(2) f'c
--- KSI	--- KSI

DESIGNER NOTE: INDICATE MIN. REQUIRED CONCRETE STRENGTH, ROUND CONCRETE STRENGTH TO ONE TENTH KSI.

DESIGNER NOTE: MIN. DISTANCE BETWEEN THREADED INSERT AND END OF BEAM IS 3".

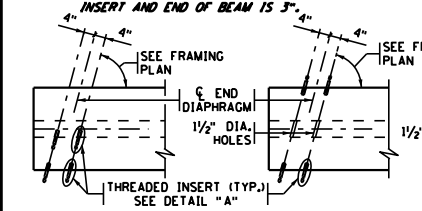

PLAN AT FASCIA BEAMS

PLAN AT INTERIOR BEAMS

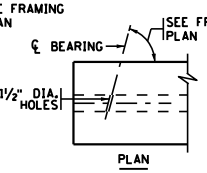

PLAN

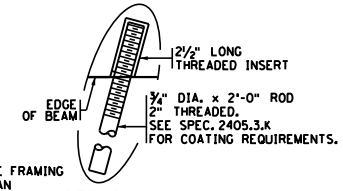

DETAIL "A"

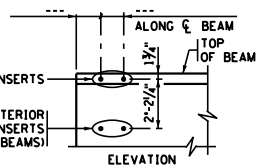

ELEVATION

CONCRETE END DIAPHRAGM

PARAPET ABUTMENT
(SEE DETAIL B814 FOR DIAPHRAGM DETAILS)

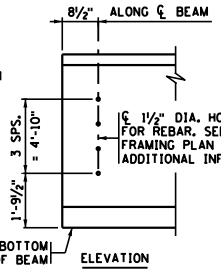

ELEVATION

CONCRETE END DIAPHRAGM

SEMI-INTEGRAL ABUTMENT
SEE SUPERSTRUCTURE DETAILS AND REINFORCEMENT FOR DIAPHRAGM DETAILS.

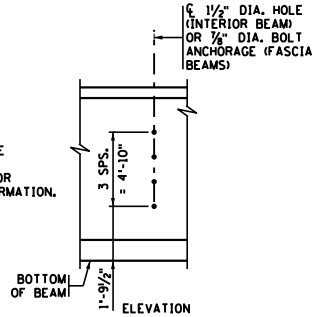

ELEVATION

STEEL INTERMEDIATE DIAPHRAGM

(SEE DETAIL B412 FOR DIAPHRAGM DETAILS)

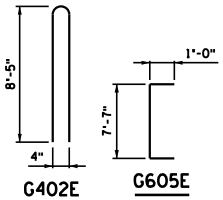

G402E G605E

G301E

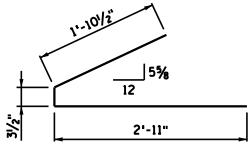

G303E

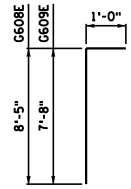

G608E & G609E

REVISED: JUNE 12, 2019

APPROVED: JANUARY 13, 2015

Nancy Daubenberger
STATE BRIDGE ENGINEER

CERTIFIED BY _____ LICENSED PROFESSIONAL ENGINEER _____ DATE

NAME: LIC. NO.

TITLE: 96MW PRESTRESSED CONCRETE BEAM (PRETENSIONED) 96MW-

BEAMS

FIG. 5-397.532

DES: DR: CHK: CHK: APPROVED:

SHEET NO. OF SHEETS

BRIDGE NO.

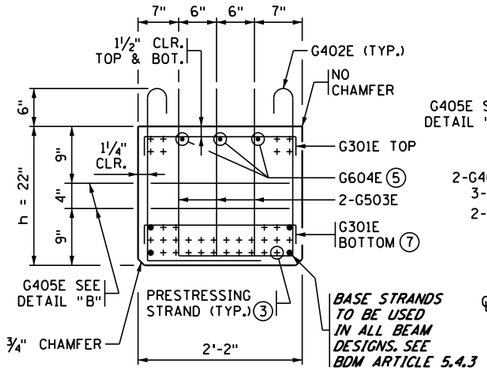

END VIEW - 22" RB

CUT STRANDS FLUSH WITH CONCRETE.
COVER ENDS WITH ONE COMPONENT POLYURETHANE SEALANT PER APPROVED PRODUCT LIST.

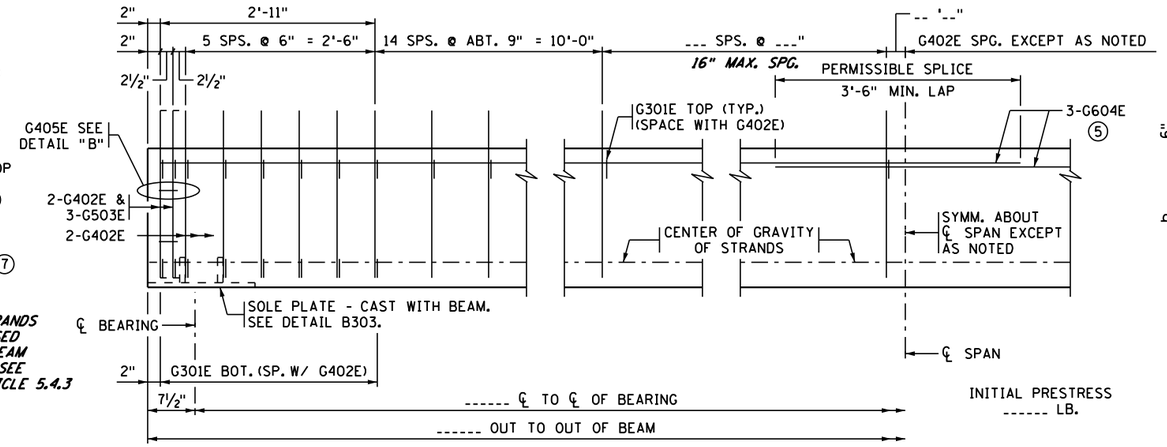

BEAM ELEVATION

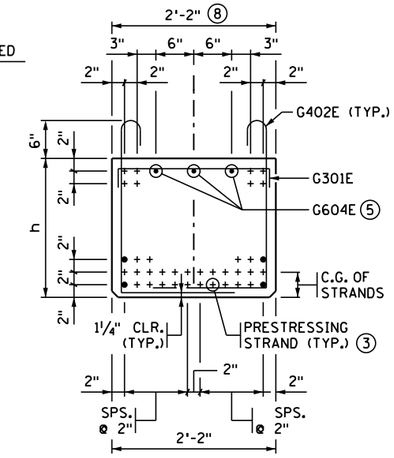

SECTION AT ℄ SPAN

STRAND ARRANGEMENT	
LOCATION	NO. OF STRANDS
TOP ROW	----
2ND ROW FROM TOP	----
3RD ROW FROM BOTTOM	----
2ND ROW FROM BOTTOM	----
BOTTOM ROW	----
TOTAL	----
C.G. OF STRANDS = ---- INCHES	

C.G. = DISTANCE TO CENTER OF GRAVITY OF ALL STRANDS FROM BOTTOM OF BEAM. ALL STRANDS SPACED 2" CENTER TO CENTER, HORIZONTALLY AND VERTICALLY, EXCEPT AS NOTED.

ALL STRAIGHT STRAND.

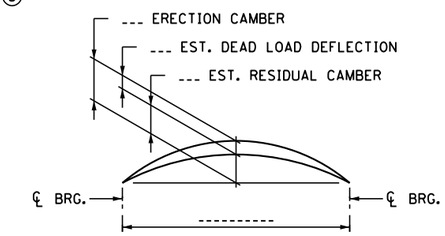

CAMBER DIAGRAM

DEAD LOAD DEFLECTION SHOWN IS FOR WEIGHT OF SLAB, WEARING COURSE, BARRIER, SIDEWALK AND MEDIAN WHERE APPLICABLE.

CONTRACTOR WILL TAKE ELEVATIONS AT TOP OF BEAMS AFTER ERECTION AND WILL ALLOW FOR DEFLECTION SHOWN TO ENABLE BUILDING FORMS TO CORRECT GRADE AND SPECIFIED SLAB THICKNESS. PROVIDE COPY OF ELEVATIONS TO THE ENGINEER.

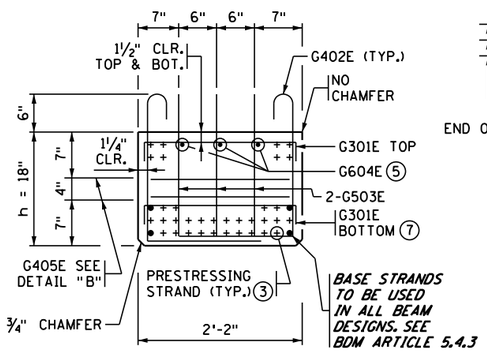

END VIEW - 18" RB

CUT STRANDS FLUSH WITH CONCRETE.
COVER ENDS WITH ONE COMPONENT POLYURETHANE SEALANT PER APPROVED PRODUCT LIST.

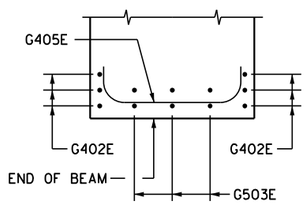

DETAIL "B"

PLAN VIEW SHOWING PLACEMENT OF G405E BAR

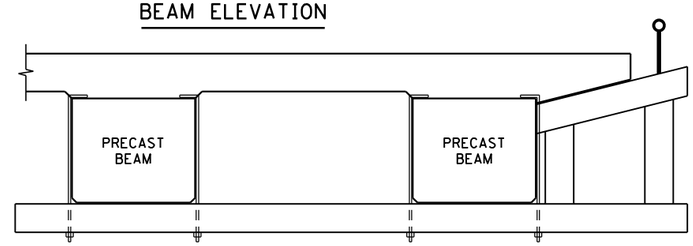

OVERHANG SUPPORT CONCEPT SKETCH

SEE THE "CONSTRUCTION NOTES" ON FRONT PORTION OF THE BRIDGE PLANS. THIS CONCEPT HAS BEEN USED SUCCESSFULLY ON PREVIOUS PROJECTS. CONTRACTORS MAY CONSIDER THIS OR ANOTHER SYSTEM AT THEIR DISCRETION.

TEXT IN ITALICS ARE DESIGNER NOTES. REMOVE PRIOR TO PLOTTING FINAL PLAN.

DESIGNER NOTE: ADD STANDARD TEMPORARY BRACING NOTE FOR RECTANGULAR PCB TO THE "CONSTRUCTION NOTES" ON THE FRONT PORTION OF THE PLANS.

CONTRACTOR SHALL VERIFY STABILITY OF FASCIA BEAMS FROM OVERTURNING (NO PERMANENT BEAM DIAPHRAGMS ARE PRESENT). CONTRACTOR SHALL PROVIDE TEMPORARY BRACING.

GENERAL NOTES

PROVIDE HANDLING HOOKS OR DEVICES AS REQUIRED BY CONTRACTOR.

MARK EACH BEAM SHOWING BRIDGE NUMBER, CASTING DATE, AND INDIVIDUAL IDENTIFICATION LETTERS AND NUMBERS ON THE FACE OF THE BEAM, NEAR THE END, SO LOCATED THAT THEY WILL BE EXPOSED AFTER THE END DIAPHRAGMS HAVE BEEN CAST. MARK FASCIA BEAMS ON THE INSIDE FACE. ENSURE ALL MARKINGS ARE STENCILLED AND CLEARLY LEGIBLE. FOR LOCATION OF BEAMS, SEE FRAMING PLAN.

ALL MATERIAL AND WORK SHOWN OR NOTED ON THIS SHEET IS INCLUDED IN UNIT PRICE BID FOR PRESTRESSED CONCRETE BEAMS. SEE SPEC. 2405.

SEE FRAMING PLAN FOR BEAM END MARKED "X".

AS AN ALTERNATE TO THE END DIAPHRAGM ANCHORAGES SHOWN, THE CONTRACTOR MAY SUBMIT DETAILS OF A CAST-IN-PLACE ANCHORAGE TO THE ENGINEER FOR APPROVAL. ANCHORAGE MUST PROVIDE AN ULTIMATE PULL OUT STRENGTH OF 15 KIPS PER ANCHORAGE.

① MINIMUM CONCRETE STRENGTH AT TIME OF PRESTRESS TRANSFER.

② MINIMUM CONCRETE STRENGTH WHEN BEAM CAN BE TRANSPORTED AND INSTALLED.

③ USE 7-WIRE LOW RELAXATION PRESTRESSING STRAND, CONFORMING TO ASTM A416, GRADE 270.

④ MAY STAGGER BARS TO AVOID INTERFERENCE.

⑤ PROVIDE 2" CLEARANCE AT ENDS OF BEAM.

⑥ FOR INSERTS IN THE OUTSIDE OF FASCIA BEAM, ADJUST THE ROD LENGTH ACCORDING TO THE OVERHANG DIMENSION.

⑦ PLACE G301E BAR ON TOP OF THE TOP ROW OF PRESTRESSING STRANDS IN THE BOTTOM OF THE BEAM.

⑧ ROUGH FLOAT AND BROOM TRANSVERSELY FOR BOND IN ACCORDANCE WITH SPEC. 2405.3.D.

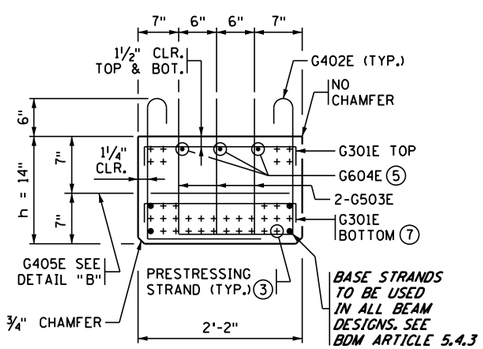

END VIEW - 14" RB

CUT STRANDS FLUSH WITH CONCRETE.
COVER ENDS WITH ONE COMPONENT POLYURETHANE SEALANT PER APPROVED PRODUCT LIST.

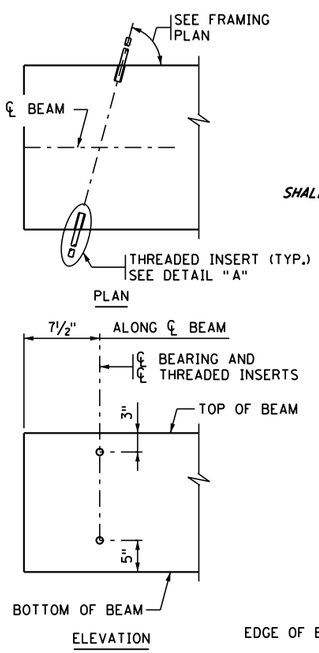

CONCRETE END DIAPHRAGM ANCHORAGES

INTEGRAL ABUTMENT
(SEE DETAIL B816 FOR CONCRETE END DIAPHRAGM DETAILS)

DESIGNER NOTE:
FOR BRIDGES WITH SEMI-INTEGRAL OR PARAPET ABUTMENTS, DESIGN THE CONCRETE END DIAPHRAGM TO ACCOMMODATE THE SHALLOW BEAM DEPTH, AS NO STANDARD END DIAPHRAGM DETAILS EXIST.

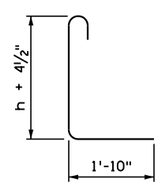

G402E

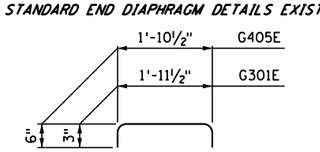

G301E, G405E

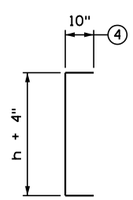

G503E

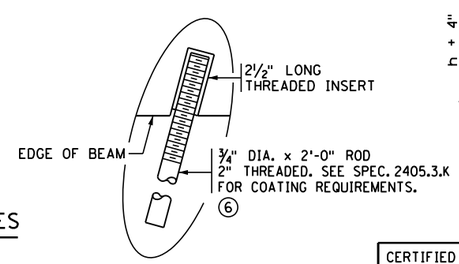

DETAIL "A"

SECTION HEIGHT "h"		
14" ☐	18" ☐	22" ☐

AN "X" IN THE BOX INDICATES THE SECTION HEIGHT.

CALCULATED PRESTRESS LOSSES	
ELASTIC SHORTENING LOSS	--- KSI
LONG TERM LOSSES	--- KSI
TOTAL LOSSES	--- KSI

MINIMUM CONCRETE STRENGTH - KSI	
① f'ci	② f'c
----- KSI	----- KSI

	PRESTRESSING STRAND DIAMETER
③	½" ☐
③	0.60" ☐

DESIGNER NOTE: PLACE AN "X" IN THE APPROPRIATE BOX TO INDICATE THE STRAND DIAMETER USED FOR THE DESIGN. ROUND CONCRETE STRENGTH TO ONE TENTH KSI.

REVISED: OCTOBER 22, 2019

APPROVED: JANUARY 13, 2015
Nancy Daubenberger
STATE BRIDGE ENGINEER

CERTIFIED BY _____ LICENSED PROFESSIONAL ENGINEER _____ DATE
NAME: LIC. NO.

TITLE: 14", 18" & 22" RECTANGULAR PRESTRESSED CONCRETE BEAM (PRETENSIONED) RB-

BEAMS -----

FIG. 5-397.550

DES:	DR:	APPROVED:	BRIDGE NO.
CHK:	CHK:		
SHEET NO. OF SHEETS			

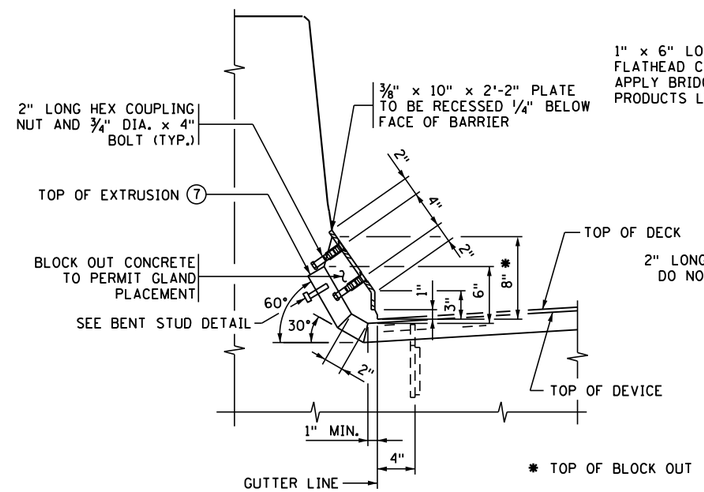

SECTION THROUGH BARRIER

TYPE F BARRIER

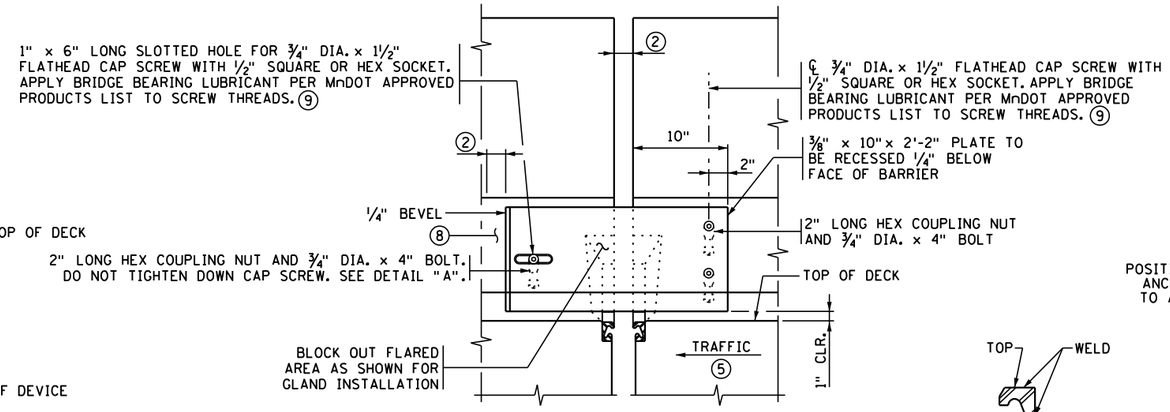

BARRIER ELEVATION

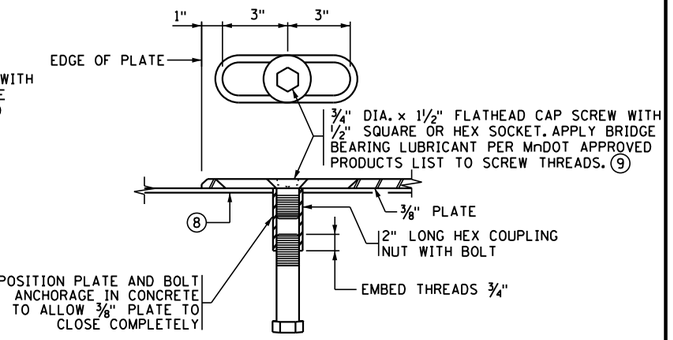

DETAIL "A"

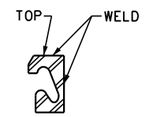

SECTION C-C

GENERAL NOTES

GALVANIZE STRUCTURAL STEEL AFTER FABRICATION PER SPEC. 3394. GALVANIZE FASTENERS PER SPEC. 3392.

LOCATE JOINTS IN EXTRUSION AT BREAKS IN TRANSVERSE PROFILE AND AS OTHERWISE REQUIRED, WITH CLOSE FIT, WELDED JOINTS. REPAIR AFTER WELDING PER SPEC. 2471.3.L.

PROVIDE STRUCTURAL STEEL PER SPEC. 3306 OR SPEC. 3309.

STRAIGHTEN EXPANSION DEVICE TO A TOLERANCE OF ⅛" IN 10 FT.

¾" DIA. X 1½" FLATHEAD CAP SCREW WITH ½" SQUARE OR HEX SOCKET PER SPEC 3391. COUNTERSINK CAP SCREWS 1/16" BELOW TOP OF PLATE. APPLY BRIDGE BEARING LUBRICANT PER MnDOT APPROVED PRODUCTS LIST TO SCREW THREADS. ⑨

PAYMENT LENGTH IS BASED ON THE HORIZONTAL DISTANCE BETWEEN THE OUTSIDE EDGES OF THE DECK MEASURED ALONG THE CENTERLINE OF JOINT.

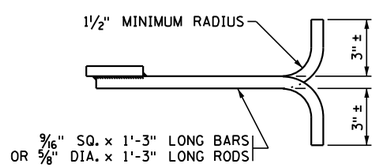

BAR-ROD DETAIL

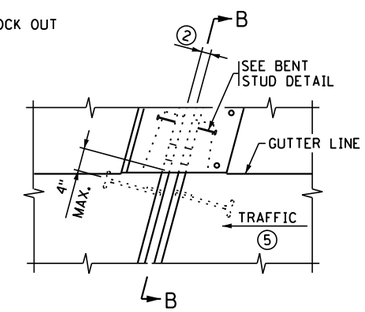

PLAN VIEW @ EXPANSION DEVICE

MEDIAN OR SIDEWALK ALTERNATE

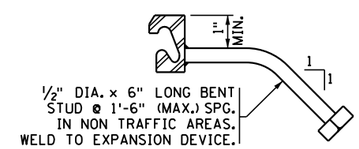

BENT STUD DETAIL

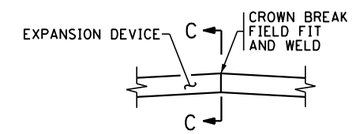

DETAIL "B"

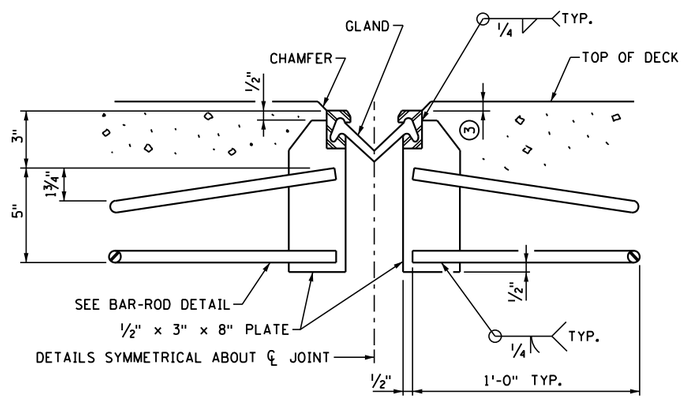

SECTION A-A

DESIGNER NOTE: CHOOSE ONE JOINT OPENING NOTE AND DELETE OTHER.

① DIMENSIONS ARE ALONG CENTERLINE OF JOINT.

② __AT 45° F; __ AT 90° F. 2" AT ALL TEMPS.

③ ⅛" (¼" MAX.). ½" (⅝" MAX.) WHEN SNOWPLOW FINGERS ARE USED. SNOWPLOW FINGERS ARE REQUIRED FOR SKEWS OVER 15° AND LESS THAN 50°.

④ SEE SUPERSTRUCTURE DETAILS FOR RADIUS.

⑤ SEE SHEET NO. __ FOR DIRECTION OF TRAFFIC.

⑥ PLACE BAR-ROD NORMAL TO JOINT ON NEW BRIDGES AND JOINT REPLACEMENTS. ON JOINT REPLACEMENTS WHEN SKEW IS OVER 15° AND LESS THAN 50° BEND RODS PARALLEL TO ℄ ROADWAY.

⑦ EXTEND GLAND 1" MIN. BEYOND THE TOP OF THE EXTRUSION.

⑧ PROVIDE SMOOTH CONCRETE FINISH BENEATH PLATE WITH 0" MIN. TO ⅛" MAX. GAP BETWEEN CONCRETE AND UNDERSIDE OF PLATE. PROVIDE BOND BREAKER (DUCT TAPE, ETC.) TO UNDERSIDE OF COVER PLATE.

⑨ LUBRICANT PER MnDOT APPROVED/QUALIFIED PRODUCTS LIST: BRIDGE GREASE.

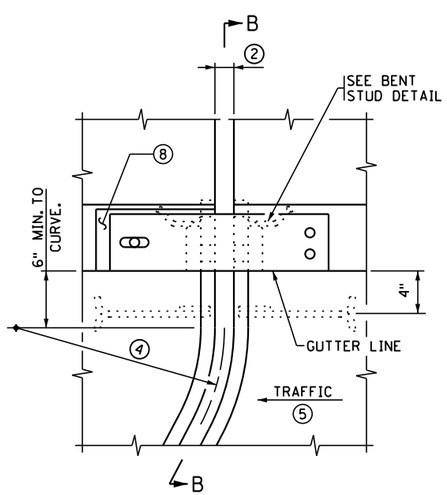

PLAN VIEW @ EXPANSION DEVICE

WITH CURVED DEVICE ALTERNATE

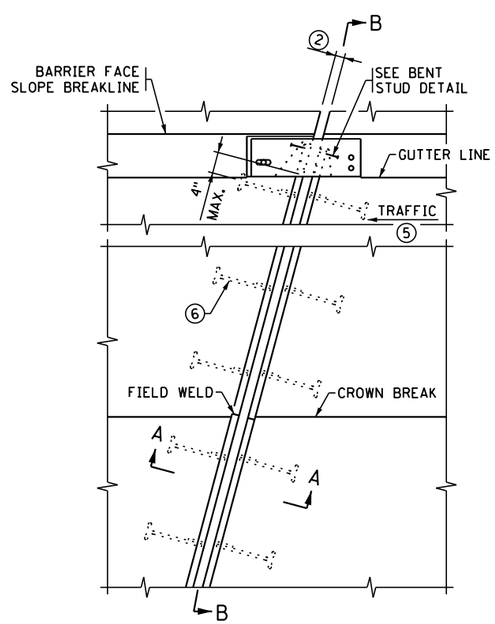

PLAN VIEW @ EXPANSION DEVICE

WITH STRAIGHT DEVICE

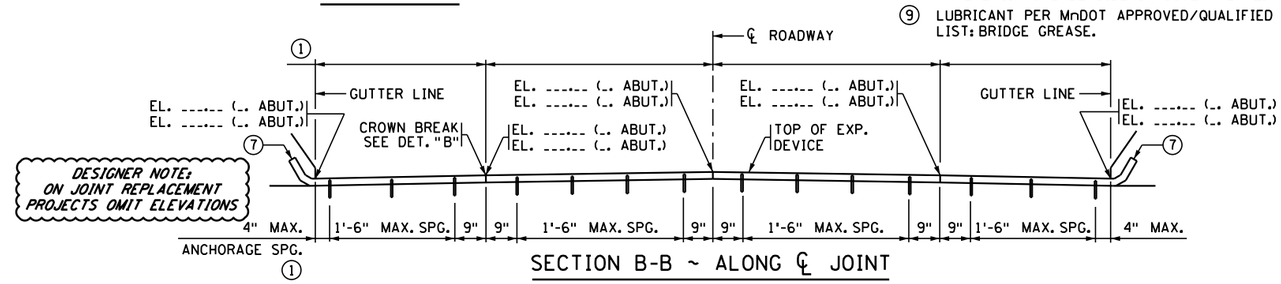

DESIGNER NOTE: ON JOINT REPLACEMENT PROJECTS OMIT ELEVATIONS

SECTION B-B ~ ALONG ℄ JOINT

ELEVATIONS SHOWN ARE ⅛" BELOW TOP OF SLAB @ ℄ JOINT
ELEVATIONS SHOWN ARE ½" BELOW TOP OF SLAB @ ℄ JOINT

REVISION: FEBRUARY 22, 2018	CERTIFIED BY _____ LICENSED PROFESSIONAL ENGINEER DATE	TITLE: WATERPROOF EXPANSION DEVICE (WITH TYPE F BARRIER)	FIG. 5-397.627(A)
APPROVED: AUGUST 24, 2016 Kevin Western STATE BRIDGE ENGINEER	NAME: LIC. NO.	DES: DR: CHK: CHK: SHEET NO. OF SHEETS	APPROVED: BRIDGE NO.

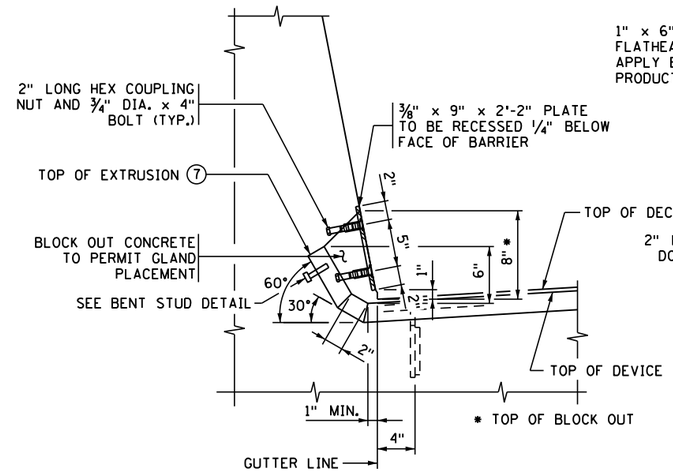

SECTION THROUGH BARRIER

TYPE S BARRIER

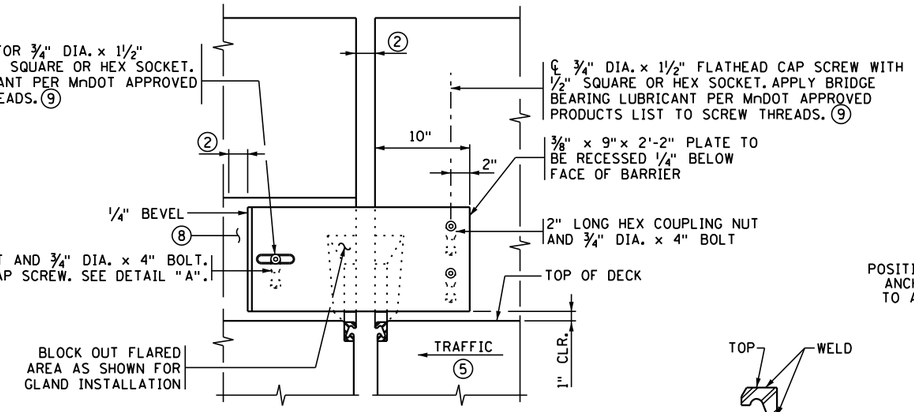

BARRIER ELEVATION

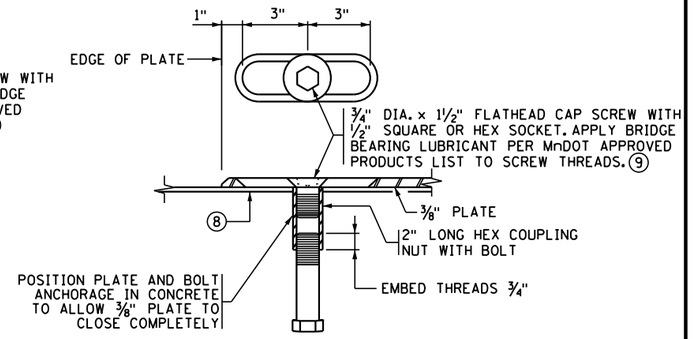

DETAIL "A"

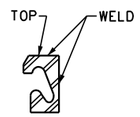

SECTION C-C

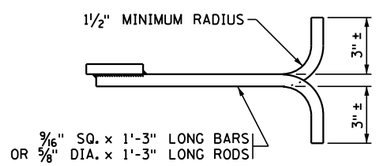

BAR-ROD DETAIL

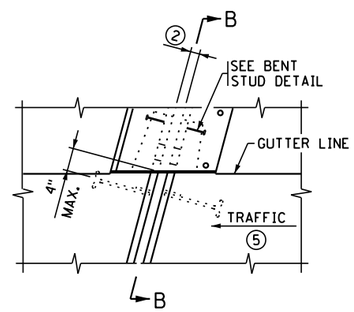

PLAN VIEW @ EXPANSION DEVICE

MEDIAN OR SIDEWALK ALTERNATE

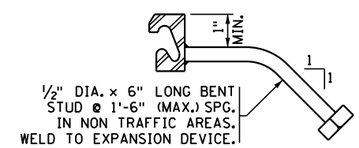

BENT STUD DETAIL

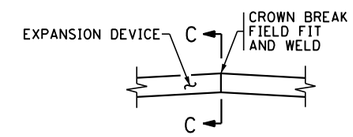

DETAIL "B"

GENERAL NOTES

GALVANIZE STRUCTURAL STEEL AFTER FABRICATION PER SPEC. 3394. GALVANIZE FASTENERS PER SPEC. 3392.

LOCATE JOINTS IN EXTRUSION AT BREAKS IN TRANSVERSE PROFILE AND AS OTHERWISE REQUIRED, WITH CLOSE FIT, WELDED JOINTS. REPAIR AFTER WELDING PER SPEC. 2471.3.L.

PROVIDE STRUCTURAL STEEL PER SPEC. 3306 OR SPEC. 3309.

STRAIGHTEN EXPANSION DEVICE TO A TOLERANCE OF ⅛" IN 10 FT.

¾" DIA. X 1½" FLATHEAD CAP SCREW WITH ½" SQUARE OR HEX SOCKET PER SPEC 3391. COUNTERSINK CAP SCREWS 1/16" BELOW TOP OF PLATE. APPLY BRIDGE BEARING LUBRICANT PER MnDOT APPROVED PRODUCTS LIST TO SCREW THREADS. ⑨

PAYMENT LENGTH IS BASED ON THE HORIZONTAL DISTANCE BETWEEN THE OUTSIDE EDGES OF THE DECK MEASURED ALONG THE CENTERLINE OF JOINT.

DESIGNER NOTE: CHOOSE ONE JOINT OPENING NOTE AND DELETE OTHER.

① DIMENSIONS ARE ALONG CENTERLINE OF JOINT.

② __AT 45° F; __ AT 90° F. 2" AT ALL TEMPS.

③ ⅛" (¼" MAX.). ½" (⅝" MAX.) WHEN SNOWPLOW FINGERS ARE USED. SNOWPLOW FINGERS ARE REQUIRED FOR SKEWS OVER 15° AND LESS THAN 50°.

④ SEE SUPERSTRUCTURE DETAILS FOR RADIUS.

⑤ SEE SHEET NO. __ FOR DIRECTION OF TRAFFIC.

⑥ PLACE BAR-ROD NORMAL TO JOINT ON NEW BRIDGES AND JOINT REPLACEMENTS. ON JOINT REPLACEMENTS WHEN SKEW IS OVER 15° AND LESS THAN 50° BEND RODS PARALLEL TO ℄ ROADWAY.

⑦ EXTEND GLAND 1" MIN. BEYOND THE TOP OF THE EXTRUSION.

⑧ PROVIDE SMOOTH CONCRETE FINISH BENEATH PLATE WITH 0" MIN. TO ⅛" MAX. GAP BETWEEN CONCRETE AND UNDERSIDE OF PLATE. PROVIDE BOND BREAKER (DUCT TAPE, ETC.) TO UNDERSIDE OF COVER PLATE.

⑨ LUBRICANT PER MnDOT APPROVED/QUALIFIED PRODUCTS LIST: BRIDGE GREASE.

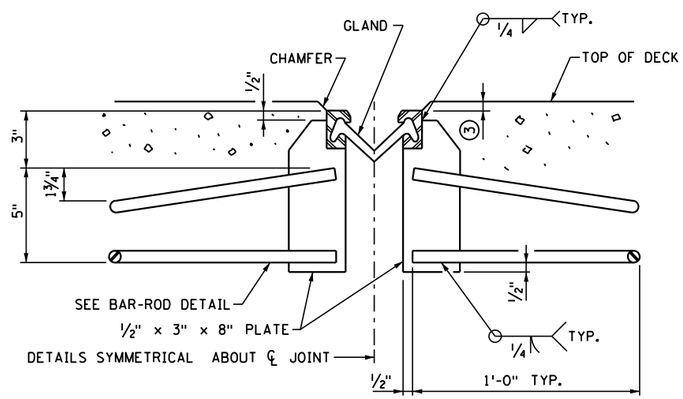

SECTION A-A

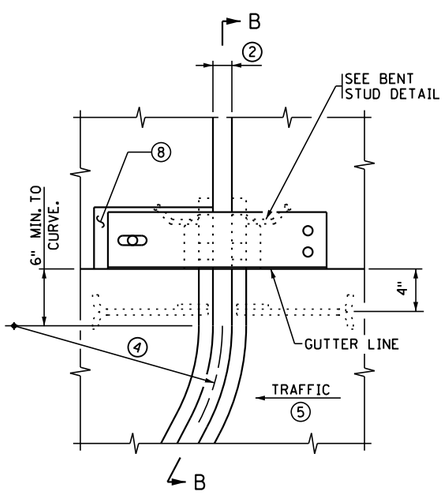

PLAN VIEW @ EXPANSION DEVICE

WITH CURVED DEVICE ALTERNATE

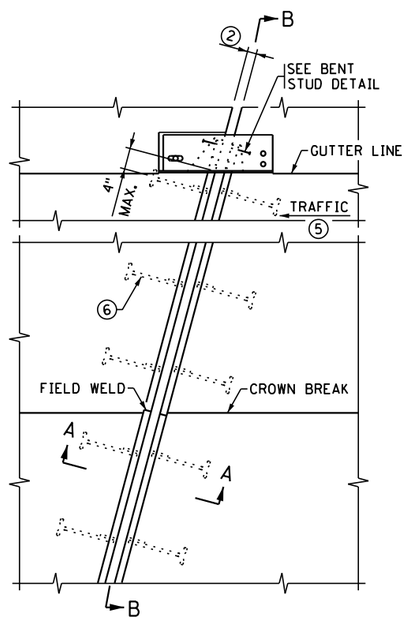

PLAN VIEW @ EXPANSION DEVICE

WITH STRAIGHT DEVICE

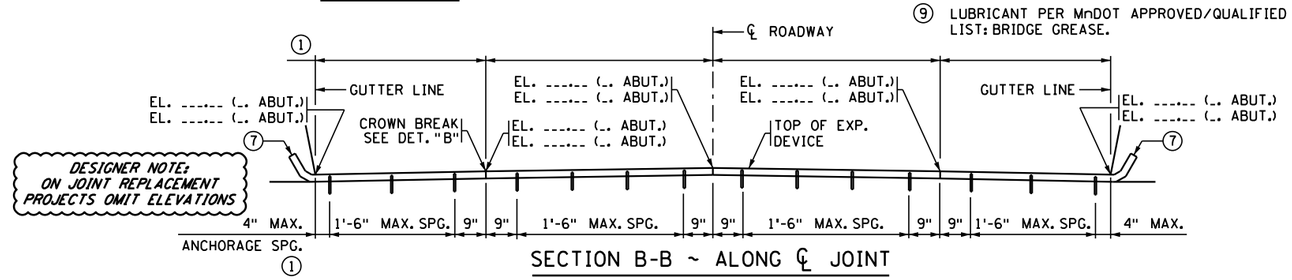

SECTION B-B ~ ALONG ℄ JOINT

ELEVATIONS SHOWN ARE ⅛" BELOW TOP OF SLAB @ ℄ JOINT

ELEVATIONS SHOWN ARE ½" BELOW TOP OF SLAB @ ℄ JOINT

REVISION: FEBRUARY 22, 2018

APPROVED: AUGUST 24, 2016

Kevin Western

STATE BRIDGE ENGINEER

CERTIFIED BY _____ LICENSED PROFESSIONAL ENGINEER _____ DATE

NAME: LIC. NO.

TITLE: WATERPROOF EXPANSION DEVICE (WITH TYPE S BARRIER)

DES:	DR:	APPROVED:
CHK:	CHK:	
SHEET NO. OF SHEETS		

FIG. 5-397.627(B)

BRIDGE NO.

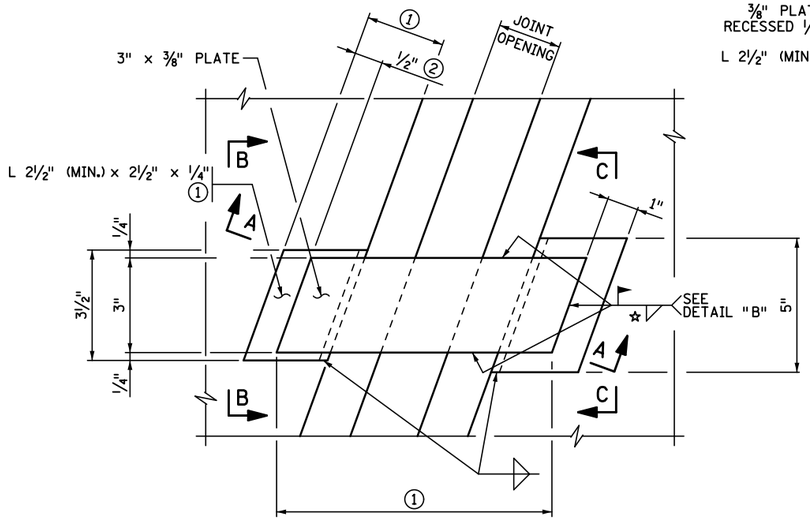

DETAIL "A"

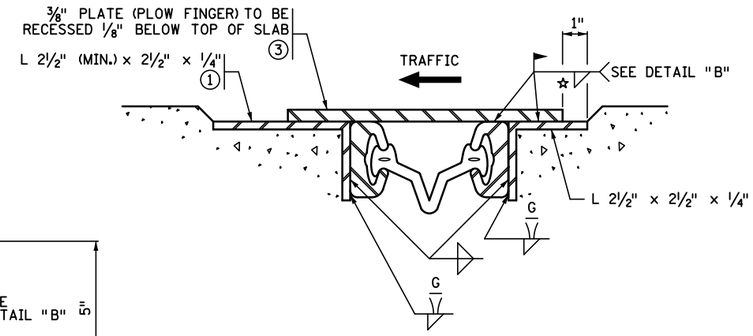

SECTION A-A

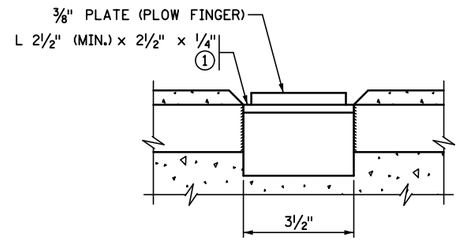

VIEW B-B

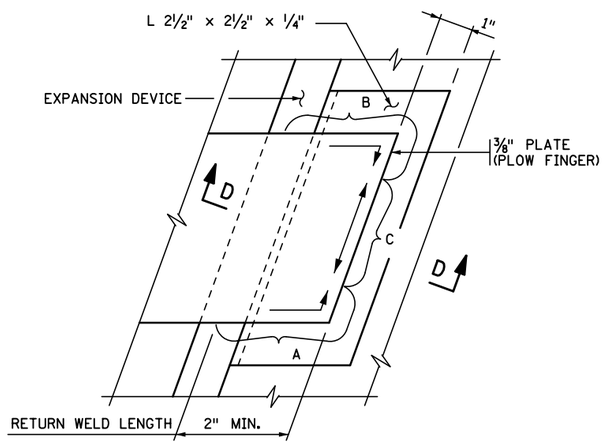

DETAIL "B"

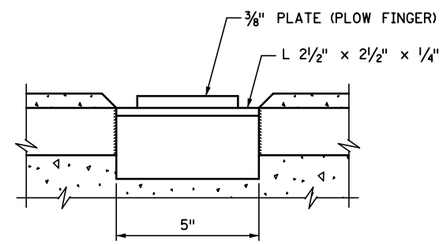

VIEW C-C

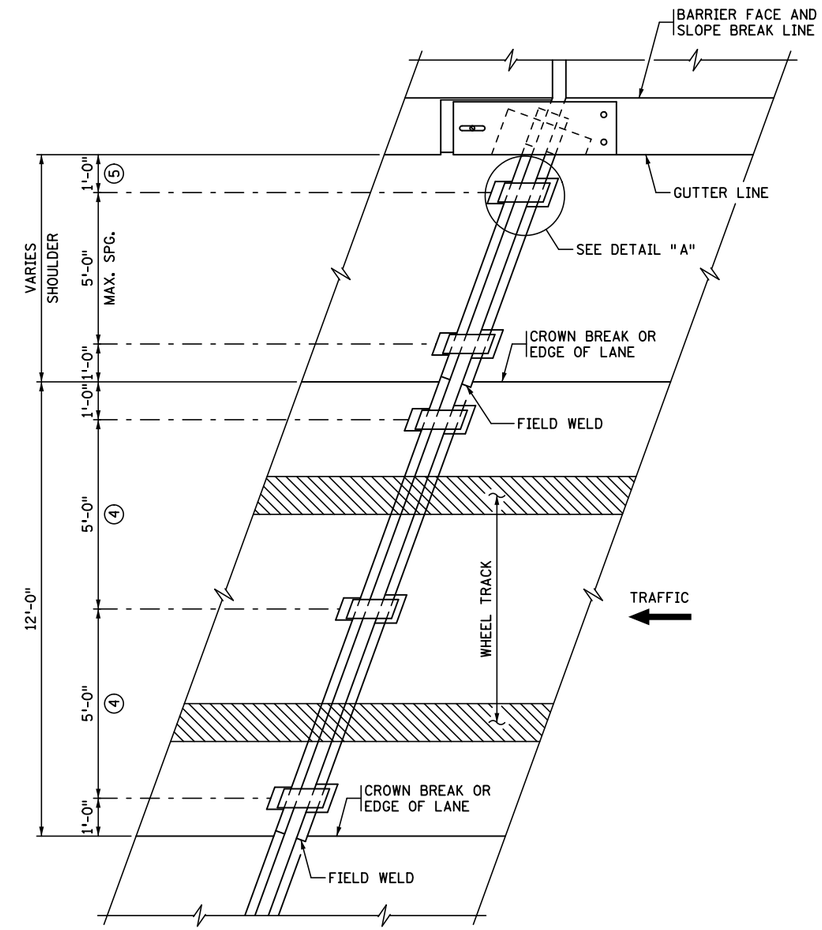

PLAN VIEW AT EXPANSION DEVICE

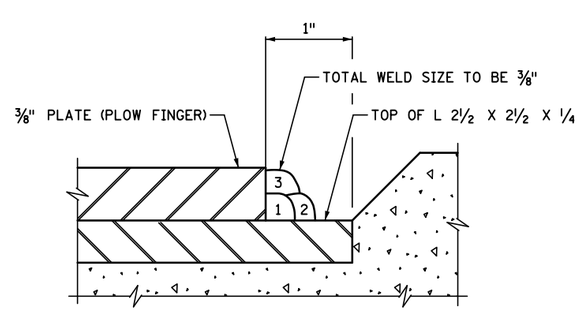

SECTION D-D

☆ WELDING PROCEDURE FOR PLOW FINGERS

I. ALL WELDING SHALL BE DONE WITH 1/8" DIAMETER LOW HYDROGEN SMAW ELECTRODES TYPE E7016 OR E7018.

II. PRIOR TO WELDING, REMOVE THE GALVANIZED COATING IN THE WELD AREA BY GRINDING.

III. WELD PASS ONE IN AREAS A AND B FIRST, THEN AREA C, FOLLOW WITH PASSES TWO AND THREE IN SAME ORDER, AS SHOWN IN DETAIL "B".

IV. REMOVE ALL WELD SLAG AND OTHER RESIDUE BETWEEN PASSES.

V. ALLOW AT LEAST 5 MINUTES COOLING TIME BETWEEN EACH OF THE NINE WELDING PASSES.

GENERAL NOTES

DO NOT GALVANIZE PLOW FINGERS.

① VARIES WITH SKEW AND EXPANSION OPENING.

② MINIMUM IN CLOSED POSITION.

③ EVERY SNOW PLOW FINGER SHALL HAVE FULL AND DIRECT BEARING ON THE PLATE THAT IS LOCATED UNDER THE MOVEMENT SIDE OF THE FINGER. NO CLICKING NOISE WILL BE ALLOWED.

④ MODIFY IF LANE WIDTH DIFFERS FROM 12 FT.

⑤ OMIT LAST PLOW FINGER ON DEVICE WITH CURVED END.

REVISION: 11-06-2013

APPROVED: SEPTEMBER 26, 2003

STATE BRIDGE ENGINEER

CERTIFIED BY _____ LICENSED PROFESSIONAL ENGINEER _____ DATE

NAME: LIC. NO.

TITLE: WATERPROOF EXPANSION DEVICE SNOW PLOW PROTECTION (USE ON SKEWS OVER 15° AND LESS THAN 50°)

DES: DR: CHK: CHK:

SHEET NO. OF SHEETS

FIG. 5-397.628

APPROVED:

BRIDGE NO.

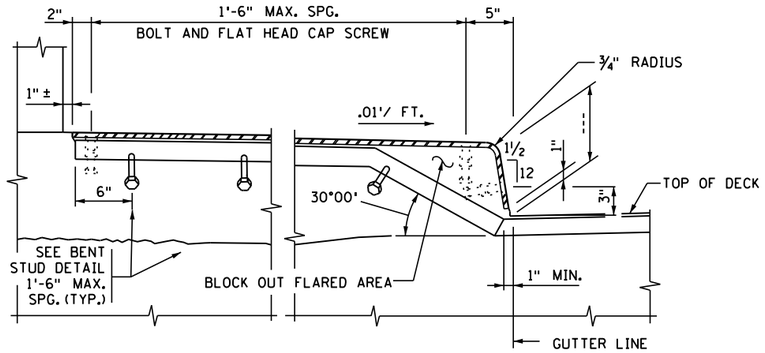

SECTION THROUGH RAISED SIDEWALK - OPTION 1

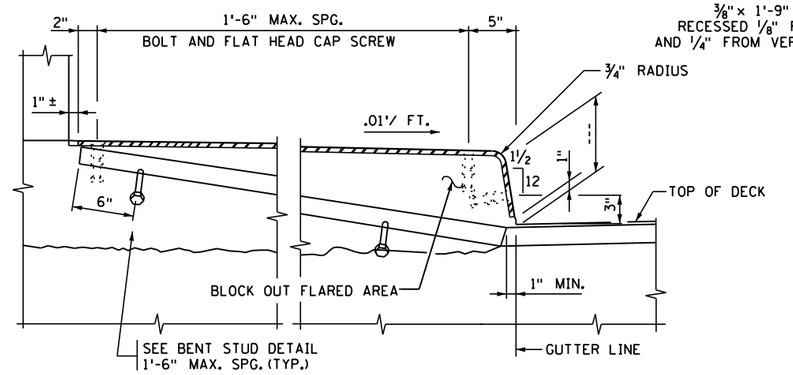

SECTION THROUGH RAISED SIDEWALK - OPTION 2

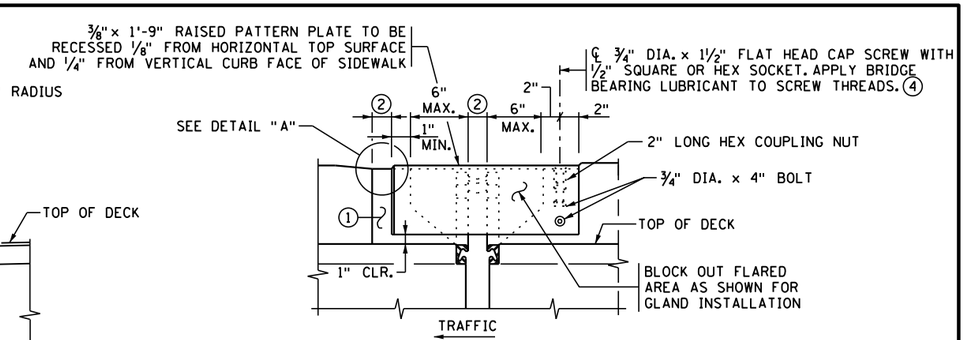

ELEVATION

RAISED SIDEWALK DETAILS

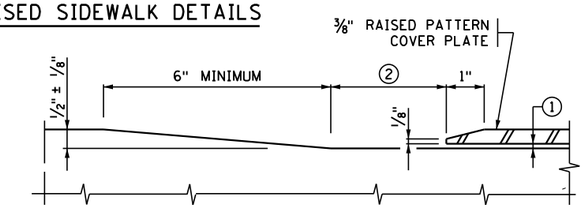

DETAIL "A" 3

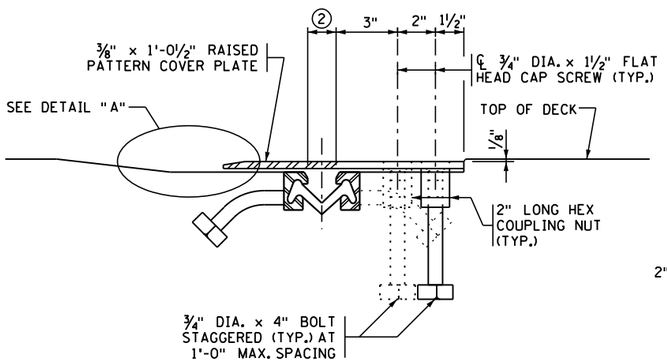

SECTION D-D 3

(INTEGRAL SIDEWALK)

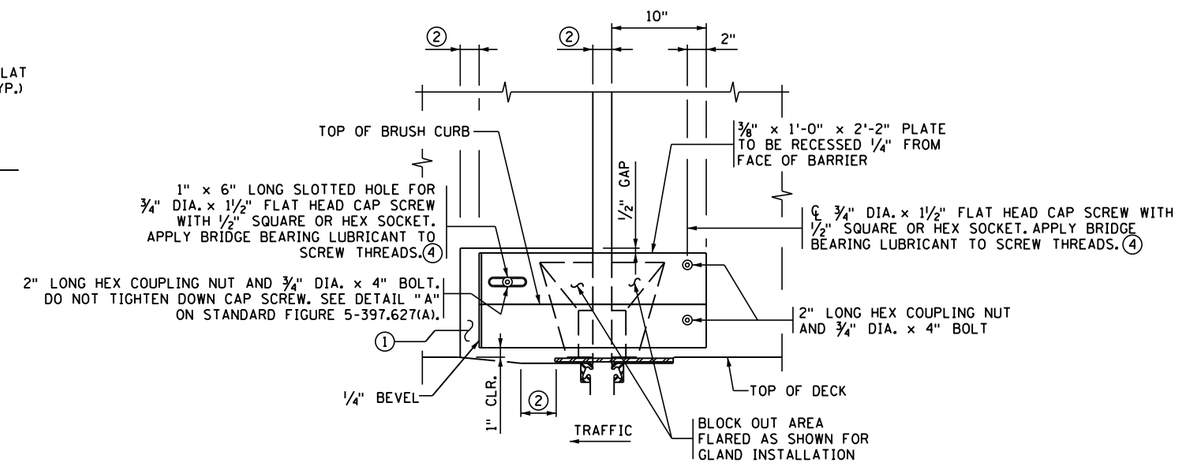

ELEVATION

(CONCRETE PARAPET AND BACK OF TYPE F BARRIER)

GENERAL NOTES

SEE OTHER WATERPROOF EXPANSION DEVICE SHEET FOR ADDITIONAL DETAILS AND NOTES.

TRANSVERSE DECK REINFORCEMENT MAY BE SHIFTED THE MINIMUM DISTANCE REQUIRED FOR EXPANSION DEVICE PLACEMENT.

3/4" DIA. X 1 1/2" FLATHEAD CAP SCREW WITH 1/2" SQUARE OR HEX SOCKET PER SPEC 3391. COUNTERSINK CAP SCREWS 1/16" FROM TOP OF PLATE. APPLY BRIDGE BEARING LUBRICANT PER MnDOT APPROVED PRODUCTS LIST TO SCREW THREADS. 4

1 PROVIDE SMOOTH CONCRETE FINISH BENEATH PLATE WITH 0" MIN. TO 1/8" MAX. GAP BETWEEN CONCRETE AND UNDERSIDE OF PLATE. PROVIDE BOND BREAKER (DUCT TAPE, ETC.) TO UNDERSIDE OF COVER PLATE.

2 SEE NOTE 2 ON OTHER WATERPROOF EXPANSION DEVICE SHEET.

3 DIMENSIONS SHOWN ARE REQUIRED TO COMPLY WITH A.D.A. STANDARDS.

4 LUBRICANT PER MnDOT APPROVED/QUALIFIED PRODUCTS LIST: BRIDGE GREASE.

DESIGNER NOTE
(REMOVE PRIOR TO PLOTTING FINAL PLAN): ALWAYS INCLUDE STANDARD FIGURE 5-397.627(A) ALONG WITH THIS SHEET.

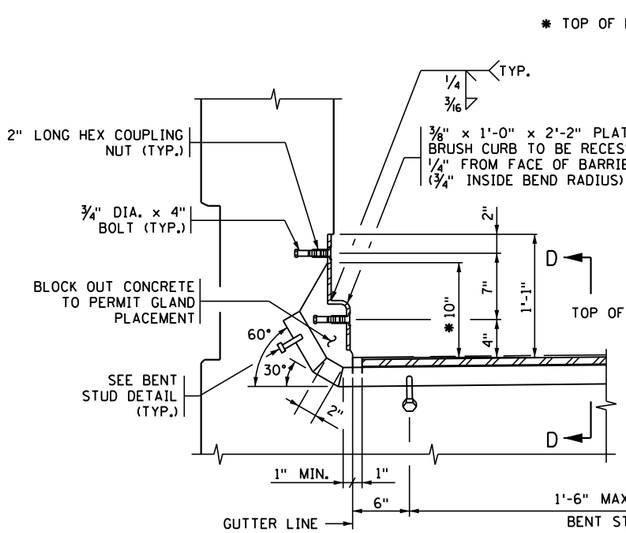

CONCRETE PARAPET

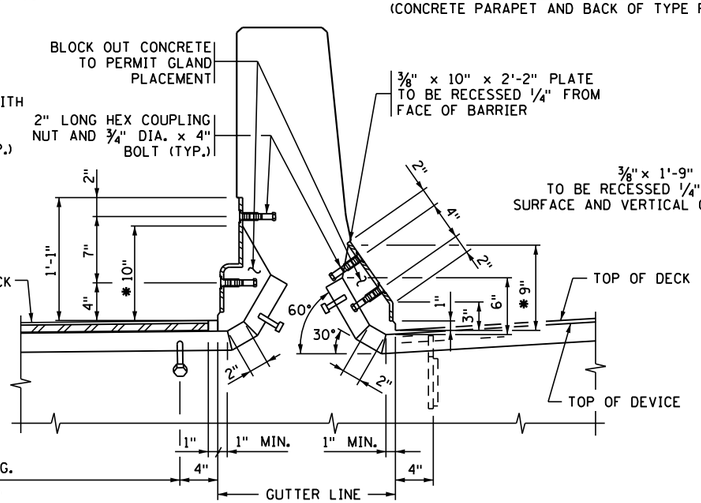

TYPE F BARRIER

SECTION THROUGH BARRIERS - INTEGRAL SIDEWALK

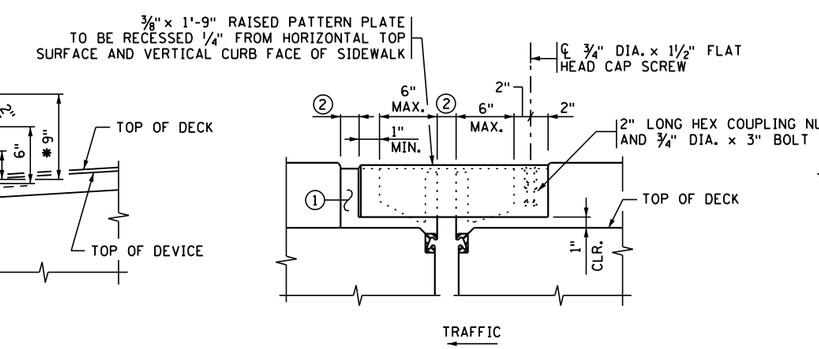

MEDIAN ELEVATION

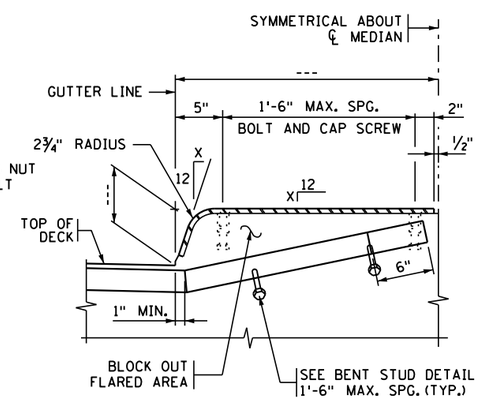

MEDIAN SECTION

REVISION: OCTOBER 22, 2019	CERTIFIED BY _____ LICENSED PROFESSIONAL ENGINEER _____ DATE	TITLE: WATERPROOF EXPANSION DEVICE (RAISED MEDIAN OR SIDEWALK WITH F BARRIER AND PARAPET)	DES: / DR:	FIG. 5-397.630(A)
APPROVED: AUGUST 24, 2016 Kevin Western STATE BRIDGE ENGINEER	NAME: LIC. NO.		CHK: / CHK:	APPROVED: / BRIDGE NO.
			SHEET NO. OF SHEETS	

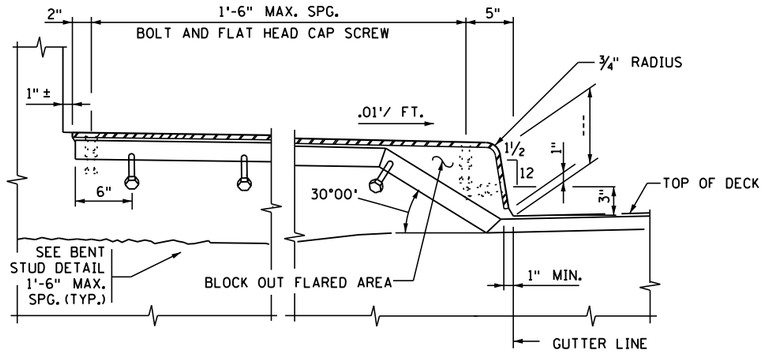

SECTION THROUGH RAISED SIDEWALK - OPTION 1

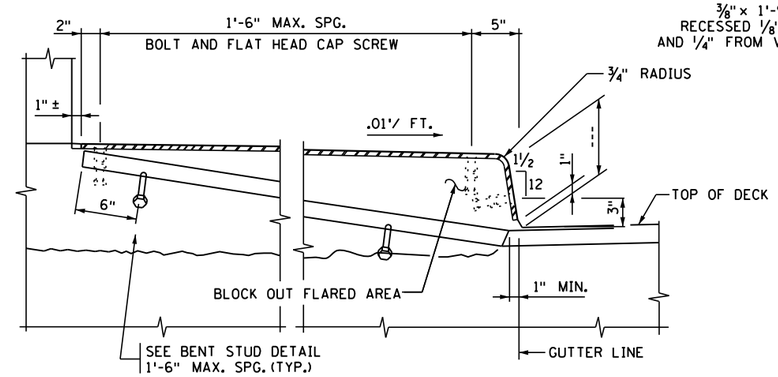

SECTION THROUGH RAISED SIDEWALK - OPTION 2

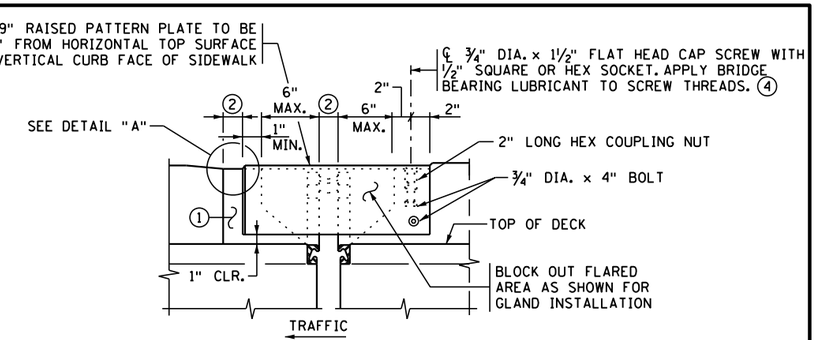

ELEVATION

RAISED SIDEWALK DETAILS

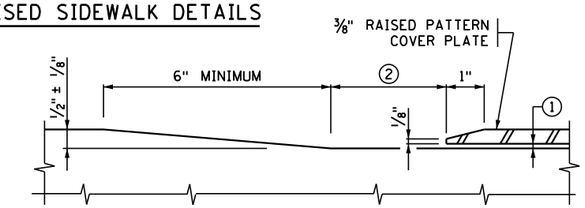

DETAIL "A" ③

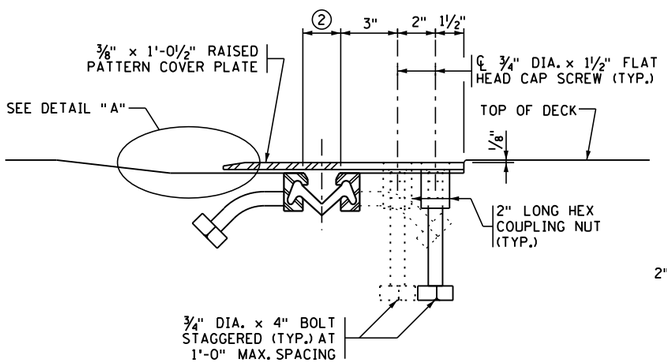

SECTION D-D ③

(INTEGRAL SIDEWALK)

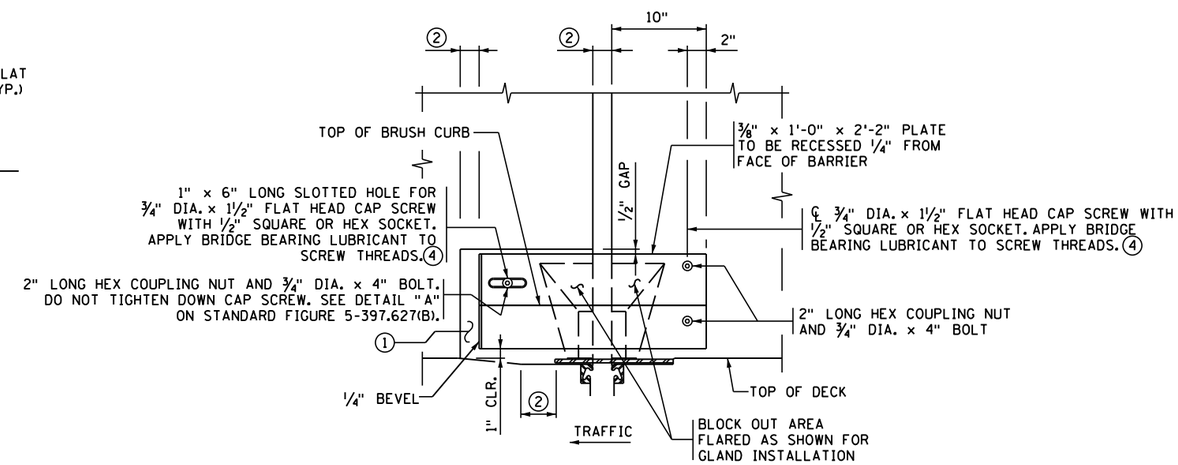

ELEVATION

(CONCRETE PARAPET AND BACK OF TYPE S BARRIER)

GENERAL NOTES

SEE OTHER WATERPROOFING EXPANSION DEVICE SHEET FOR ADDITIONAL DETAILS AND NOTES.

TRANSVERSE DECK REINFORCEMENT MAY BE SHIFTED THE MINIMUM DISTANCE REQUIRED FOR EXPANSION DEVICE PLACEMENT.

¾" DIA. X 1½" FLATHEAD CAP SCREW WITH ½" SQUARE OR HEX SOCKET PER SPEC 3391. COUNTERSINK CAP SCREWS 1/16" FROM TOP OF PLATE. APPLY BRIDGE BEARING LUBRICANT PER MnDOT APPROVED PRODUCTS LIST TO SCREW THREADS. ④

① PROVIDE SMOOTH CONCRETE FINISH BENEATH PLATE WITH 0" MIN. TO ⅛" MAX. GAP BETWEEN CONCRETE AND UNDERSIDE OF PLATE. PROVIDE BOND BREAKER (DUCT TAPE, ETC.) TO UNDERSIDE OF COVER PLATE.

② SEE NOTE ② ON OTHER WATERPROOFING EXPANSION DEVICE SHEET.

③ DIMENSIONS SHOWN ARE REQUIRED TO COMPLY WITH A.D.A. STANDARDS.

④ LUBRICANT PER MnDOT APPROVED/QUALIFIED PRODUCTS LIST: BRIDGE GREASE.

DESIGNER NOTE
(REMOVE PRIOR TO PLOTTING FINAL PLAN): ALWAYS INCLUDE STANDARD FIGURE 5-397.627(B) ALONG WITH THIS SHEET.

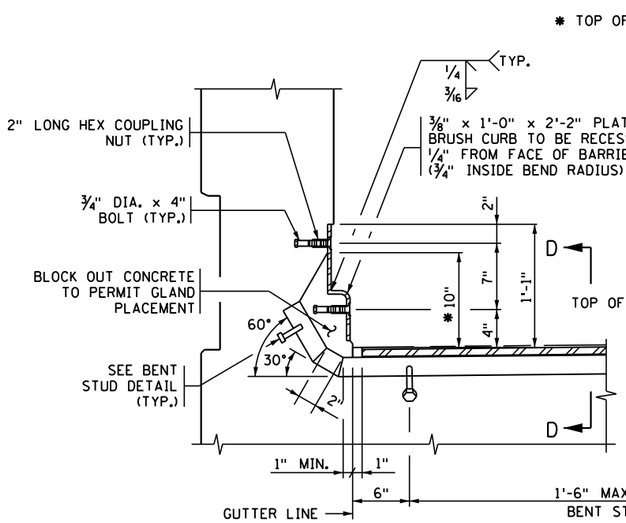

CONCRETE PARAPET

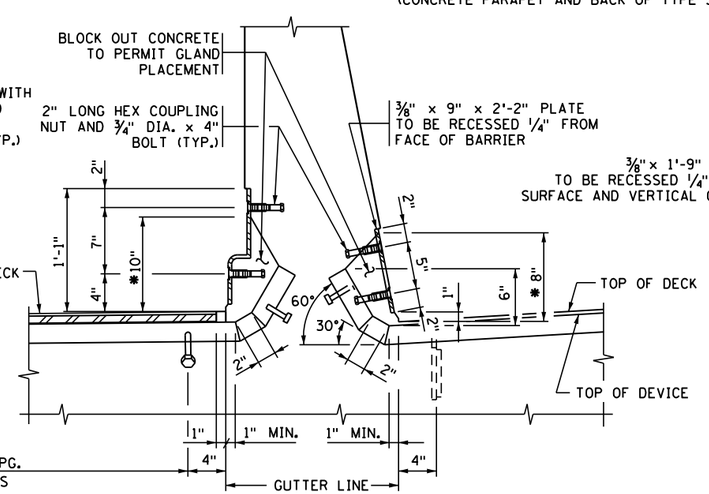

TYPE S BARRIER

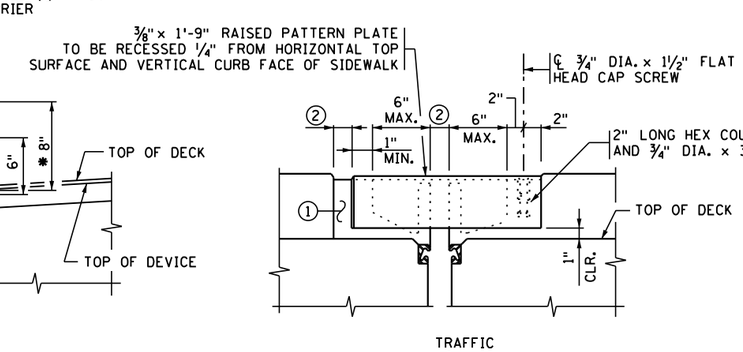

MEDIAN ELEVATION

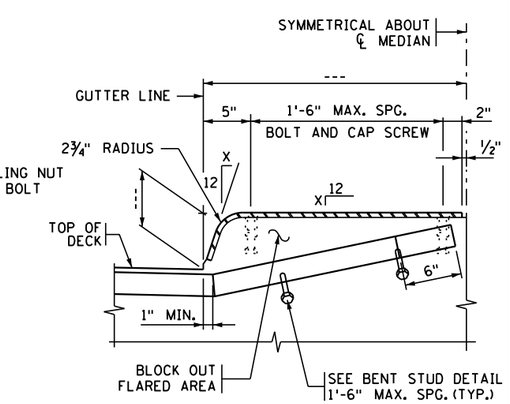

MEDIAN SECTION

SECTION THROUGH BARRIERS - INTEGRAL SIDEWALK

REVISION: OCTOBER 22, 2019

APPROVED: AUGUST 24, 2016
Kevin Western
STATE BRIDGE ENGINEER

CERTIFIED BY _____ LICENSED PROFESSIONAL ENGINEER _____ DATE
NAME: LIC. NO.

TITLE: WATERPROOF EXPANSION DEVICE (RAISED MEDIAN OR SIDEWALK WITH S BARRIER AND PARAPET)

DES: DR: CHK: CHK:

SHEET NO. OF SHEETS

FIG. 5-397.630(B)

APPROVED:

BRIDGE NO.

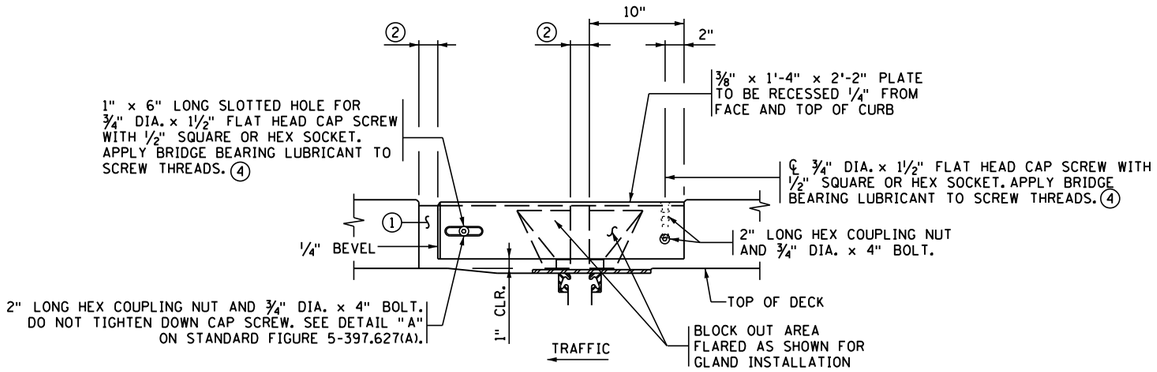

INSIDE ELEVATION OF CONCRETE CURB

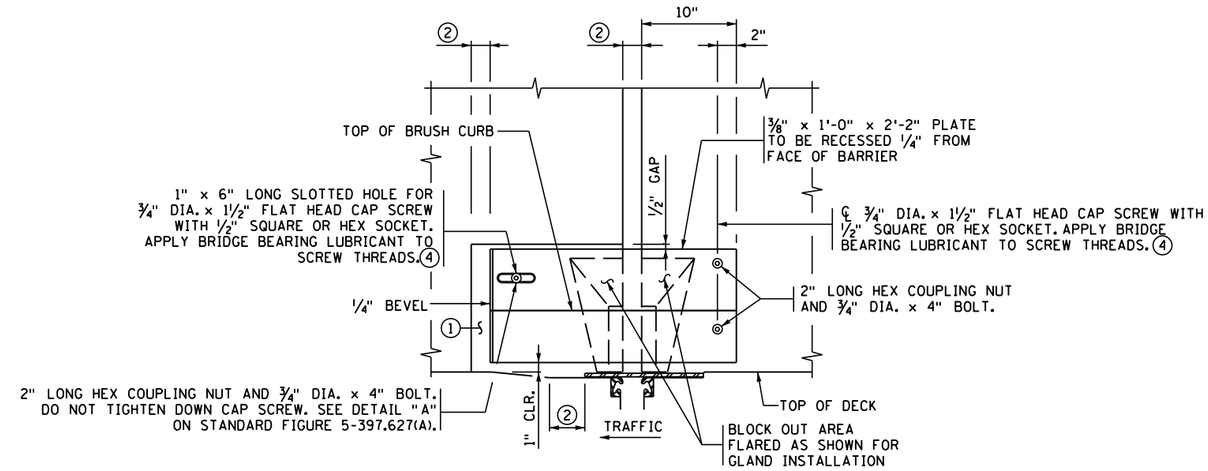

OUTSIDE ELEVATION OF F BARRIER

(BACK OF TYPE F BARRIER)

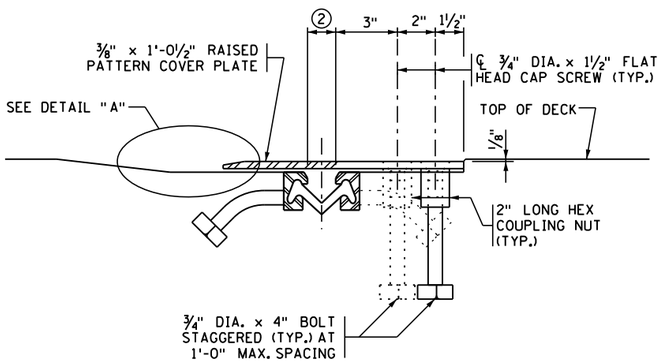

SECTION D-D 3

(INTEGRAL SIDEWALK)

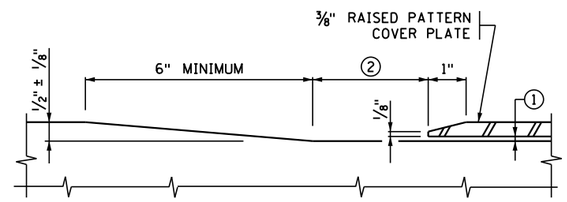

DETAIL "A" 3

GENERAL NOTES

SEE OTHER WATERPROOF EXPANSION DEVICE SHEET FOR ADDITIONAL DETAILS AND NOTES.

TRANSVERSE DECK REINFORCEMENT MAY BE SHIFTED THE MINIMUM DISTANCE REQUIRED FOR EXPANSION DEVICE PLACEMENT.

3/4" DIA. X 1 1/2" FLAT HEAD CAP SCREW WITH 1/2" SQUARE OR HEX SOCKET PER SPEC 3391. COUNTERSINK CAP SCREWS 1/16" FROM TOP OF PLATE. APPLY BRIDGE BEARING LUBRICANT TO SCREW THREADS. 4

1 PROVIDE SMOOTH CONCRETE FINISH BENEATH PLATE WITH 0" MIN. TO 1/8" MAX. GAP BETWEEN CONCRETE AND UNDERSIDE OF PLATE. PROVIDE BOND BREAKER (DUCT TAPE, ETC.) TO UNDERSIDE OF COVER PLATE.

2 SEE NOTE 2 ON OTHER WATERPROOF EXPANSION DEVICE SHEET.

3 DIMENSIONS SHOWN ARE REQUIRED TO COMPLY WITH A.D.A. STANDARDS.

4 LUBRICANT PER MnDOT APPROVED/QUALIFIED PRODUCTS LIST: BRIDGE GREASE.

DESIGNER NOTE (REMOVE PRIOR TO PLOTTING FINAL PLAN): ALWAYS INCLUDE STANDARD FIGURE 5-397.627(A) ALONG WITH THIS SHEET.

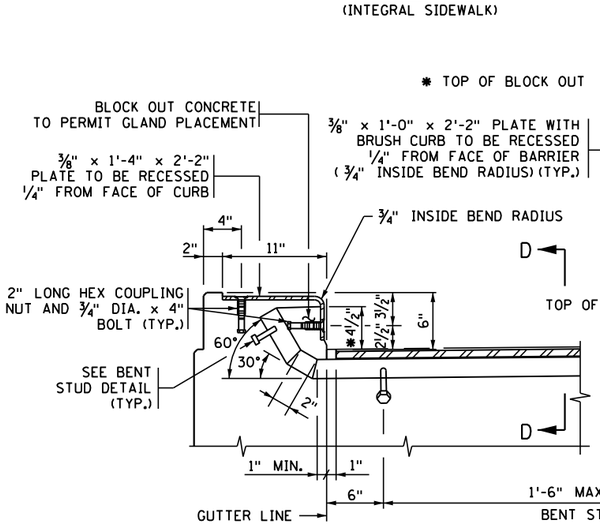

CONCRETE CURB

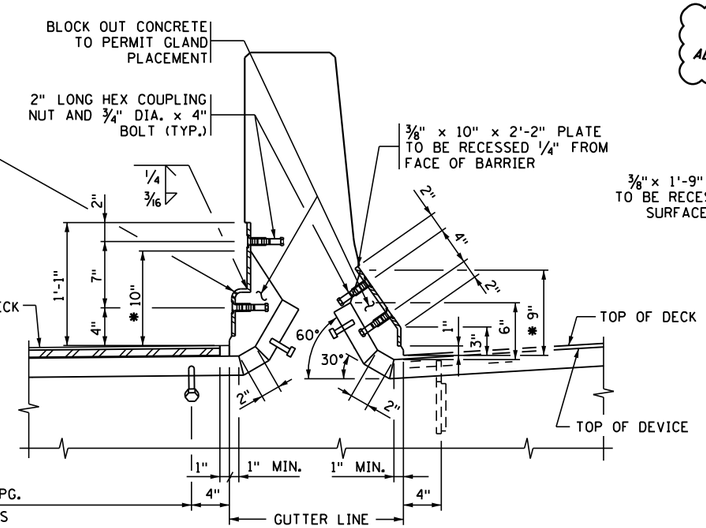

TYPE F BARRIER

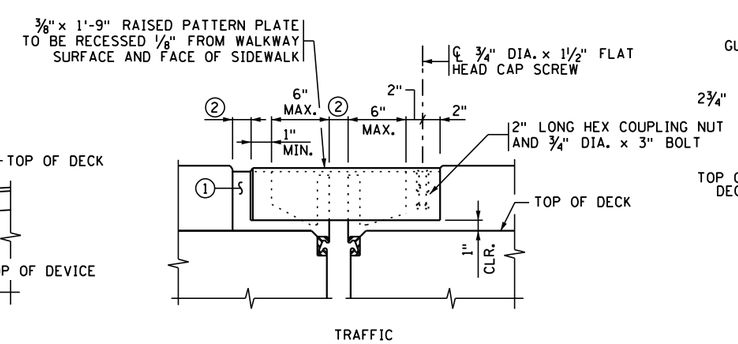

MEDIAN ELEVATION

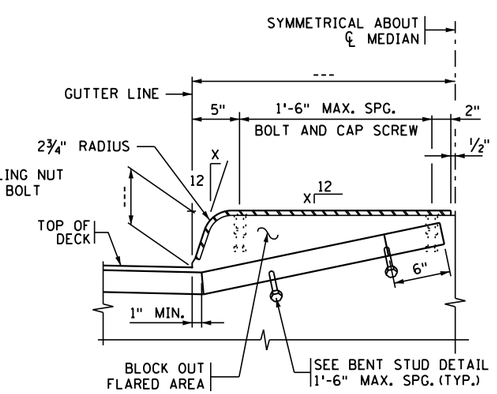

MEDIAN SECTION

SECTION THROUGH BARRIER AND CURB - INTEGRAL SIDEWALK

REVISION: OCTOBER 22, 2019

APPROVED: AUGUST 24, 2016

Kevin Western

STATE BRIDGE ENGINEER

CERTIFIED BY _____ LICENSED PROFESSIONAL ENGINEER _____ DATE

NAME: LIC. NO.

TITLE: WATERPROOF EXPANSION DEVICE (RAISED MEDIAN OR INTEGRAL SIDEWALK WITH F BARRIER AND CURB)

DES: DR: CHK: CHK:

APPROVED:

SHEET NO. OF SHEETS

FIG. 5-397.632(A)

BRIDGE NO.

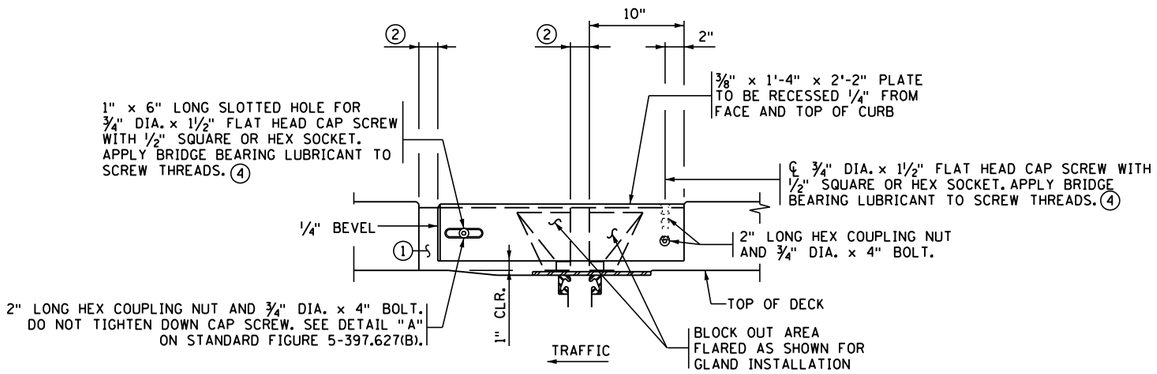

INSIDE ELEVATION OF CONCRETE CURB

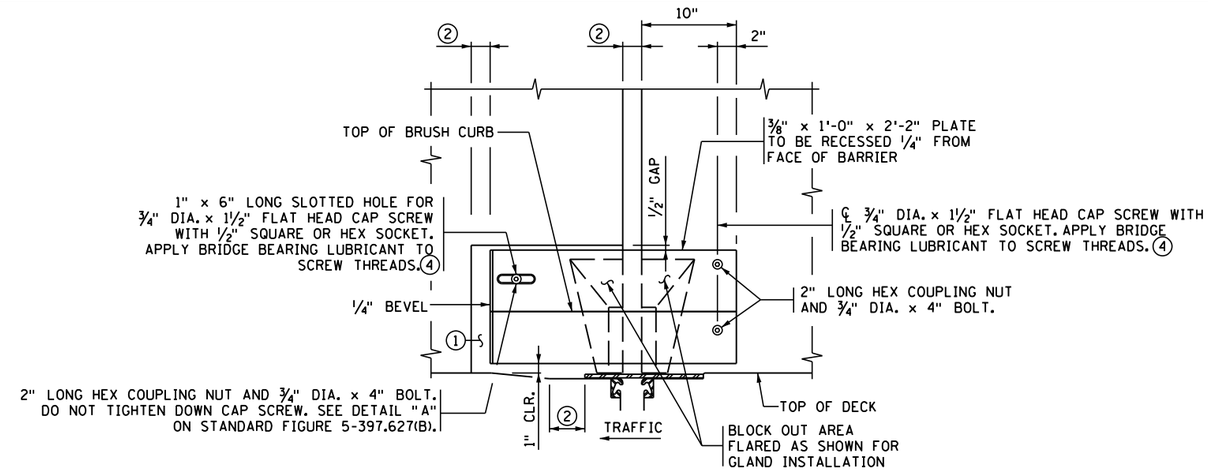

OUTSIDE ELEVATION OF S BARRIER

(BACK OF TYPE S BARRIER)

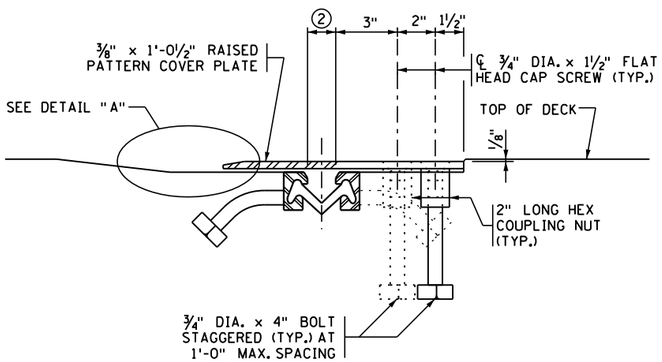

SECTION D-D 3

(INTEGRAL SIDEWALK)

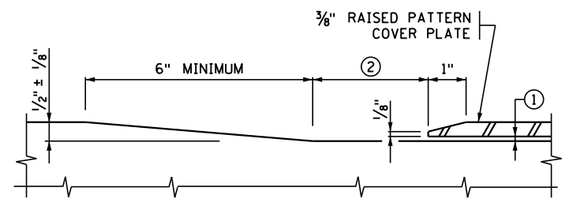

DETAIL "A" 3

GENERAL NOTES

SEE OTHER WATERPROOF EXPANSION DEVICE SHEET FOR ADDITIONAL DETAILS AND NOTES.

TRANSVERSE DECK REINFORCEMENT MAY BE SHIFTED THE MINIMUM DISTANCE REQUIRED FOR EXPANSION DEVICE PLACEMENT.

3/4" DIA. X 1 1/2" FLAT HEAD CAP SCREW WITH 1/2" SQUARE OR HEX SOCKET PER SPEC 3391. COUNTERSINK CAP SCREWS 1/16" FROM TOP OF PLATE. APPLY BRIDGE BEARING LUBRICANT TO SCREW THREADS. 4

1 PROVIDE SMOOTH CONCRETE FINISH BENEATH PLATE WITH 0" MIN. TO 1/8" MAX. GAP BETWEEN CONCRETE AND UNDERSIDE OF PLATE. PROVIDE BOND BREAKER (DUCT TAPE, ETC.) TO UNDERSIDE OF COVER PLATE.

2 SEE NOTE 2 ON OTHER WATERPROOF EXPANSION DEVICE SHEET.

3 DIMENSIONS SHOWN ARE REQUIRED TO COMPLY WITH A.D.A. STANDARDS.

4 LUBRICANT PER MnDOT APPROVED/QUALIFIED PRODUCTS LIST: BRIDGE GREASE.

DESIGNER NOTE (REMOVE PRIOR TO PLOTTING FINAL PLAN): ALWAYS INCLUDE STANDARD FIGURE 5-397.627(B) ALONG WITH THIS SHEET.

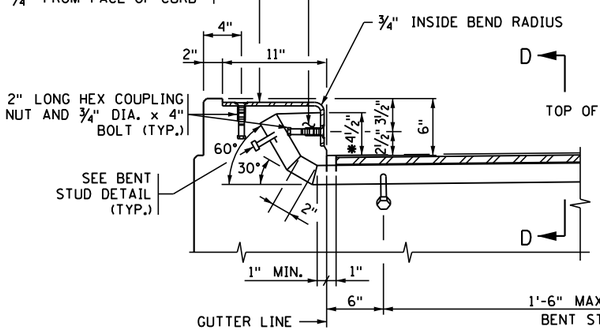

CONCRETE CURB

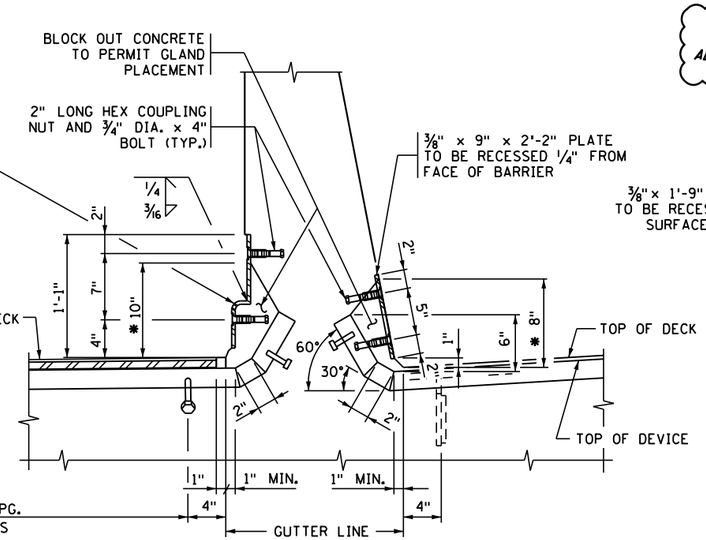

TYPE S BARRIER

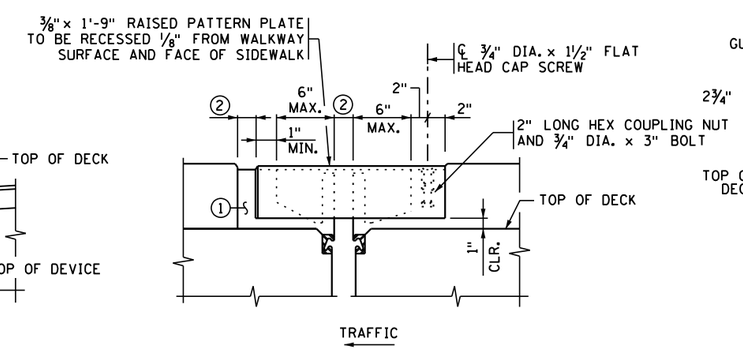

MEDIAN ELEVATION

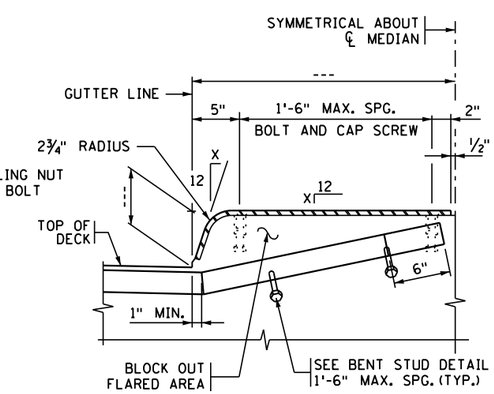

MEDIAN SECTION

SECTION THROUGH BARRIER AND CURB - INTEGRAL SIDEWALK

REVISION: OCTOBER 22, 2019

APPROVED: AUGUST 24, 2016

Kevin Western

STATE BRIDGE ENGINEER

CERTIFIED BY _____ LICENSED PROFESSIONAL ENGINEER _____ DATE

NAME: LIC. NO.

TITLE: WATERPROOF EXPANSION DEVICE (RAISED MEDIAN OR INTEGRAL SIDEWALK WITH S BARRIER AND CURB)

DES: DR: CHK: CHK:

APPROVED:

SHEET NO. OF SHEETS

FIG. 5-397.632(B)

BRIDGE NO.

WEARING COURSE

☐ LOW SLUMP

☐ OTHER _____
TYPE OR MANUFACTURER

EXPANSION JOINTS

JOINT MANUFACTURER

MANUFACTURER'S IDENTIFICATION _____
MFR'S No. AND/OR LETTER DESIGNATION FOR JOINT USED

GLAND MANUFACTURER _____
NAME AND ADDRESS (CITY, STATE)

SIZE OF GLAND _____

MANUFACTURER'S IDENTIFICATION _____
MFR'S No. AND/OR LETTER DESIGNATION FOR GLAND USED

ELASTOMERIC BEARING PADS

PAD MANUFACTURER _____
NAME AND ADDRESS (CITY, STATE)

SPECIAL SURFACE FINISH

PRODUCT NAME: _____ COLOR & TEXTURE: _____

FINISHING ROADWAY FACES OF BARRIER OR PARAPET

PRODUCT NAME: _____ COLOR & TEXTURE: _____

ANTI-GRAFFITI COATING

MANUFACTURER _____
NAME AND ADDRESS (CITY, STATE)

PRODUCT NAME: _____ LOCATION: _____

PAINT SYSTEM

MnDOT SPECIFICATION NUMBER _____
2478 OR 2479 OR OTHER

MANUFACTURER _____
NAME AND ADDRESS (CITY, STATE)

PRIME COAT _____
MnDOT MATERIAL SPECIFICATION NUMBER

INTERMEDIATE COAT _____
MnDOT MATERIAL SPECIFICATION NUMBER

FINISH COAT _____ _____
MnDOT MATERIAL SPECIFICATION NUMBER COLOR

PLAN QUALITY

RATE 1 (AGREE), 2 (NEUTRAL), OR 3 (DISAGREE, PLEASE COMMENT BELOW)

DIMENSIONING AND DETAILING ADEQUATELY DESCRIBED REQUIRED CONSTRUCTION. _____

BAR LISTS AND QUANTITIES WERE TYPICALLY COMPLETE AND FREE OF ERRORS. _____

SCALE OF DRAWINGS AND OVERALL LEGIBILITY OF LINES AND TEXT WAS GOOD. _____

(SB) SPECIAL PROVISIONS ADEQUATELY DESCRIBED SPECIAL WORK AND PAYMENT. _____

COMMENTS: _____

NUMBER OF BRIDGE
SUPPLEMENTAL AGREEMENTS: _____ COST: $ _____

LIST SIGNIFICANT ERRORS OR OMISSIONS IN PLAN DETAILS OR PAY QUANTITIES IN THE SPACE PROVIDED AT RIGHT.

NOTIFICATION TO ADD, REMOVE, OR REHAB A STRUCTURE

PLEASE GO TO THE FOLLOWING WEBSITE AND COMPLETE THE FORM WHEN ADDING, REMOVING OR REHABILITATING A STRUCTURE:
(CONTACT THE BRIDGE INVENTORY MANAGEMENT UNIT AT 651-366-4557 IF YOU HAVE QUESTIONS)
- WHEN ADDING A NEW STRUCTURE - (SEND WHEN THE BRIDGE IS OPEN TO TRAFFIC)
http://www.dot.state.mn.us/bridge/new-structure.html
- WHEN REMOVING A STRUCTURE - (SEND WHEN THE BRIDGE IS NO LONGER IN SERVICE)
http://www.dot.state.mn.us/bridge/remove-structure.html
- WHEN REHABILITATING A STRUCTURE - (SEND WHEN THE REHABILITATION IS COMPLETE)
http://www.dot.state.mn.us/bridge/rehab-structure.html

CHANGE OF VERTICAL CLEARANCE

PLEASE GO TO THE FOLLOWING WEBSITE WHEN CHANGING THE VERTICAL CLEARANCE OF EXISTING BRIDGE STRUCTURE:
(CONTACT THE BRIDGE INVENTORY MANAGEMENT UNIT AT 651-366-4557 IF YOU HAVE QUESTIONS)
http://www.dot.state.mn.us/bridge/pdf/clearanceform.pdf

OTHER ITEMS ①

① UTILITIES ADDED DURING CONSTRUCTION AND SPECIALTY ITEMS.

FINAL QUANTITIES ENTERED ON SCHEDULE OF QUANTITIES: YES ☐ NO ☐

REMOVE & PATCH QUANTITIES (SF)						CONCRETE SURFACE REPAIR (SF)	CLEAN & PAINT REINF. (SF)
TYPE A:	TYPE B:	TYPE C:	TYPE D:	TYPE E:	TYPE F:		

SUMMARY OF SIGNIFICANT AS-BUILT CHANGES

THE AS-BUILT INFORMATION WAS ADDED TO THE PLAN BY:

_____ _____
INSPECTOR(S) SIGNATURE DATE

CHECKED BY: _____ _____
PROJECT ENGINEER/SUPERVISOR SIGNATURE DATE

WHEN BRIDGE IS OPEN TO TRAFFIC, COMPLETE THIS AS-BUILT BRIDGE DATA SHEET AND SUBMIT TO THE BRIDGE OFFICE VIA EMAIL AT: BridgeForms.dot@state.mn.us.

REVISION:

APPROVED: MAY 10, 2017
Kevin Western
STATE BRIDGE ENGINEER

AS-BUILT DETAILS
(AS NEEDED)

THIS FORM IS AVAILABLE IN AN ELECTRONIC FORMAT AT:
http://www.dot.state.mn.us/bridge/pdf/as-built-bridge-data-r0.xlsx

TITLE: AS-BUILT BRIDGE DATA

SHEET NO. OF SHEETS

FIG. 5-397.900

APPROVED:

BRIDGE NO.