DESIGNER NOTE
(REMOVE PRIOR TO PRINTING FINAL PLAN):
REFER TO MNDOT BDM "MEMO TO DESIGNERS #2019-01" AND "TEMPORARY BARRIER GUIDANCE MANUAL", TABLE 3-3 FOR GUIDANCE ON DEFLECTION DISTANCE.

DESIGNER NOTE
(REMOVE PRIOR TO PRINTING FINAL PLAN):
MIN. THICKNESS FOR GLUED-LAMINATED WOOD BRIDGE DECK PANEL IS 5". REFER TO MNDOT BDM ARTICLE 2.4.1.3 FOR ADDITIONAL REQUIREMENTS.

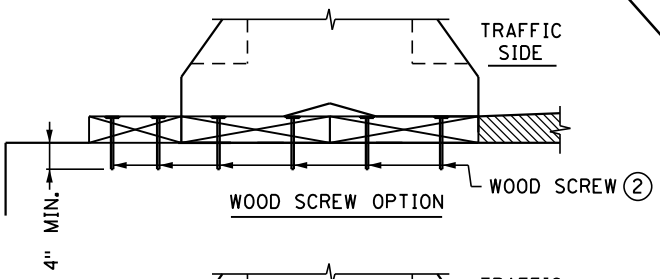

WOOD SCREW OPTION

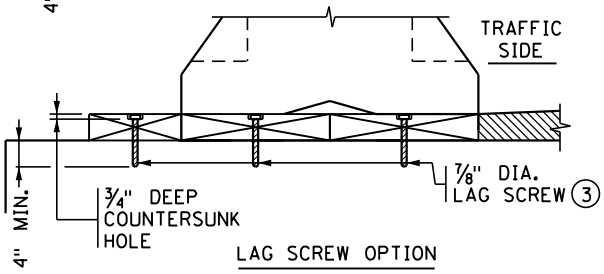

LAG SCREW OPTION

DETAIL "B"

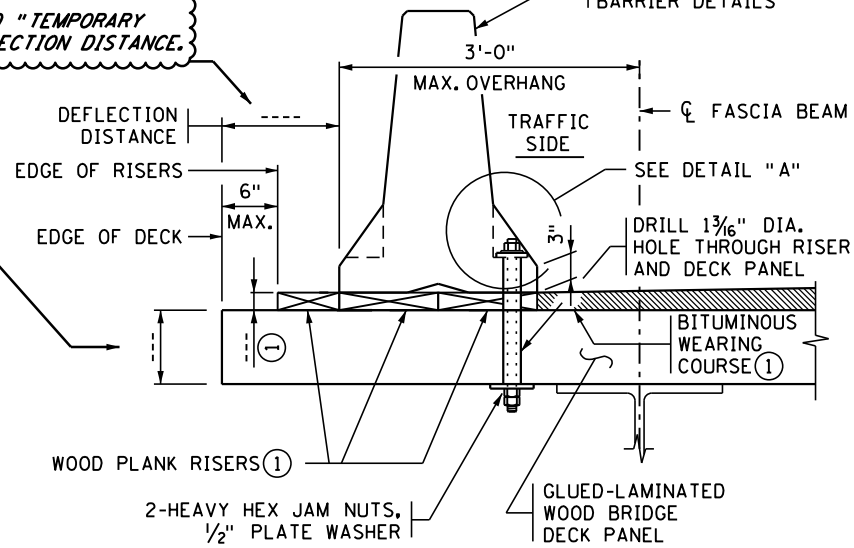

ANCHORAGE DETAILS

ANCHORED BARRIER MEETS MASH TL-3 REQUIREMENTS

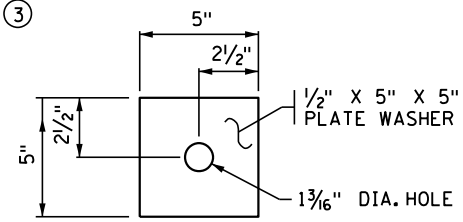

BOTTOM PLATE WASHER

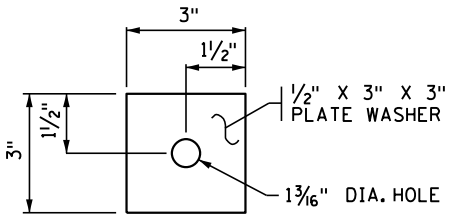

TOP PLATE WASHER

DESIGNER NOTE (REMOVE PRIOR TO PRINTING FINAL PLAN):
COORDINATE W/ROADWAY DESIGNER FOR LAYOUT AND PAYMENT.
INSERT SPECIAL PROVISION 2433.8.D FOR INSTALLATION INSTRUCTIONS.

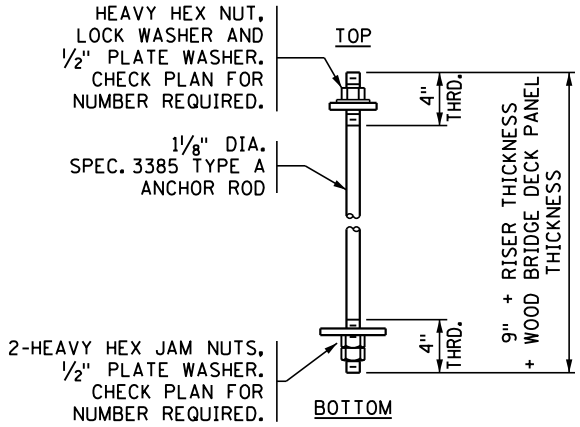

ANCHOR

(3 PER BARRIER SEGMENT)

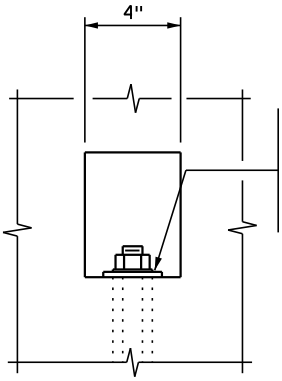

SIDE VIEW

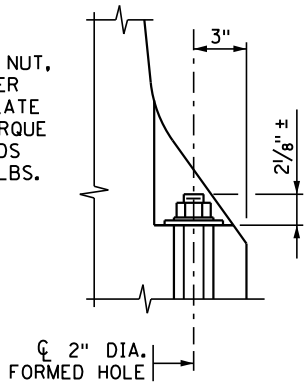

DETAIL "A"

NOTES:

ALL HARDWARE TO BE GALVANIZED IN ACCORDANCE WITH SPEC. 3392.

PLATE WASHERS TO BE STRUCTURAL STEEL IN ACCORDANCE WITH SPEC. 3306.

COST OF ANCHORAGE SYSTEM AND ANCHOR REMOVAL ARE INCLUDED IN COST OF PLACING TEMPORARY PORTABLE PRECAST BARRIER.

PIN BARRIERS TOGETHER PER STANDARD PLATE 8337.

REFER TO TRAFFIC CONTROL PLANS FOR DEPLOYMENT LENGTH AND BARRIER TERMINATION REQUIREMENTS.

ANCHOR ON TRAFFIC SIDE OF BARRIER ONLY.

① THICKNESS OF WOOD PLANK RISERS TO MATCH THICKNESS OF BITUMINOUS WEARING COURSE AT GUTTERLINE. MINIMUM BITUMINOUS THICKNESS = 2". MAXIMUM BITUMINOUS THICKNESS = 4". MINIMUM RISER WIDTH = 6". MINIMUM NO. OF RISER LINES = 3. MINIMUM RISER SPECIFIC GRAVITY, G = 0.55, MINIMUM RISER MODULUS OF ELASTICITY, E = 1,700,000 PSI. SEE DETAIL "B" FOR RISER CONNECTION DETAILS.

② ATTACH EACH WOOD PLANK RISER TO GLUED-LAMINATED WOOD BRIDGE DECK PANELS WITH 2 WOOD SCREWS SPACED AT 1'-0" MAX. ALONG LENGTH OF RISER. 4" MIN. SCREW EMBEDMENT IN GLUED-LAMINATED WOOD PANEL.
MIN. WOOD SCREW BENDING YIELD STRENGTH = 150,000 PSI.
MIN. WOOD SCREW ROOT DIA. = 0.172 IN.

③ ATTACH EACH WOOD PLANK RISER TO GLUED-LAMINATED WOOD BRIDGE DECK PANELS WITH 1 - 7/8" DIA. LAG SCREW SPACED AT 1'-0" MAX. ALONG LENGTH OF RISER. 4" MIN. SCREW EMBEDMENT IN GLUED-LAMINATED WOOD PANEL. LAG SCREW TO MEET ANSI/ASME STANDARD B18.2.1.
MIN. LAG SCREW BENDING YIELD STRENGTH = 45,000 PSI.
SEE SPECIAL PROVISIONS FOR INSTALLATION INSTRUCTIONS.

APPROVED: APRIL 09, 2020	STATE OF MINNESOTA DEPARTMENT OF TRANSPORTATION TEMPORARY PORTABLE PRECAST CONCRETE BARRIER ANCHORAGE TO GLUED-LAMINATED WOOD PANEL (TEMPORARY USAGE IN LIMITED BARRIER DISPLACEMENT AREAS)	REVISED	DETAIL NO.
Kevin Western STATE BRIDGE ENGINEER			B919