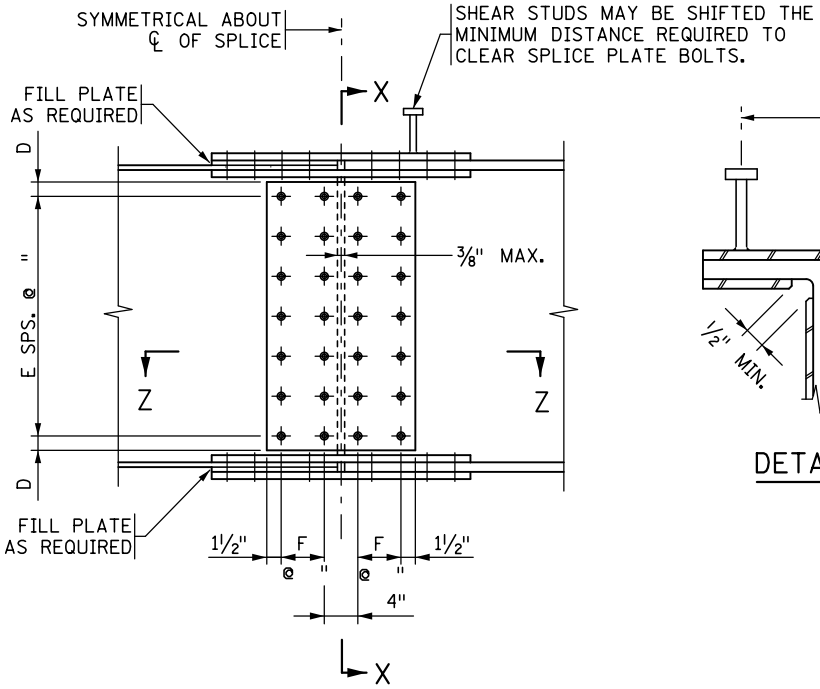

ELEVATION

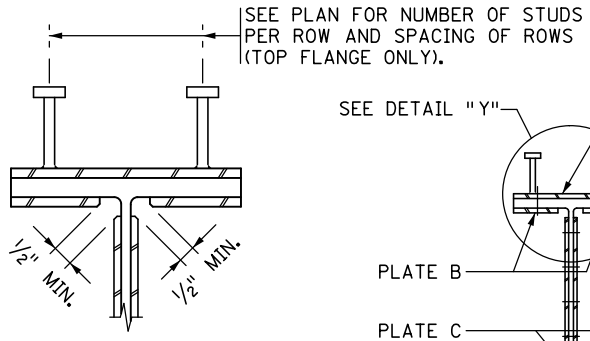

DETAIL "Y"

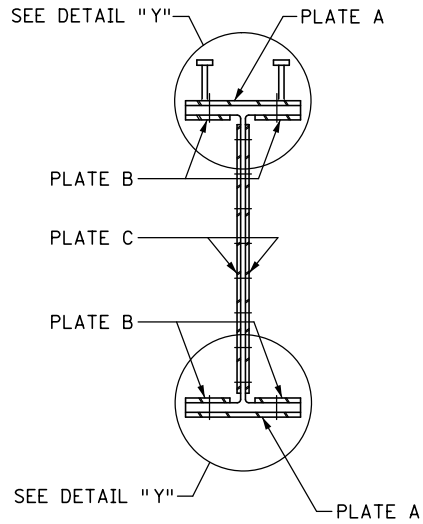

SECTION X-X

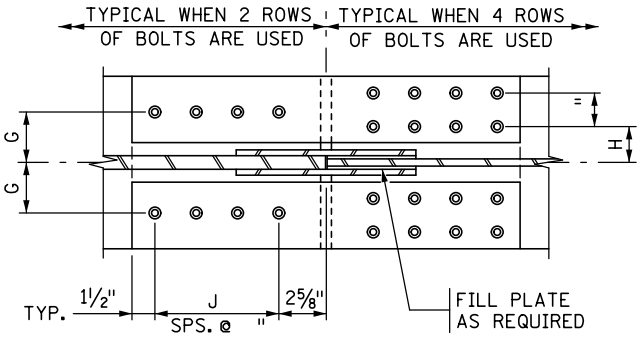

SECTION Z-Z

NOTES:

USE FILL PLATES WHERE THE DIFFERENCE IN WEB THICKNESS IS 1/16" OR GREATER. FILL PLATES SHALL BE STRUCTURAL STEEL WITH MINIMUM THICKNESS OF 1/16". WHEN THE DIFFERENCE IN WEB THICKNESS IS 1/8" OR MORE, PLACE FILL PLATES OF THE SAME THICKNESS ON BOTH SIDES OF THE THINNER WEB.

TABLE

BEAM SIZE	PLATE A (IN.)	PLATE B (IN.)	PLATE C (IN.)	D	E	F	G	H	J	FLANGE FILL PLATE	WEB FILL PLATE

APPROVED: NOVEMBER 22, 2002	STATE OF MINNESOTA DEPARTMENT OF TRANSPORTATION	REVISION	DETAIL NO.
Daniel L Dorgan STATE BRIDGE ENGINEER	SPLICES FOR STEEL BEAMS	10-22-2009 05-24-2012 01-05-2017	B400