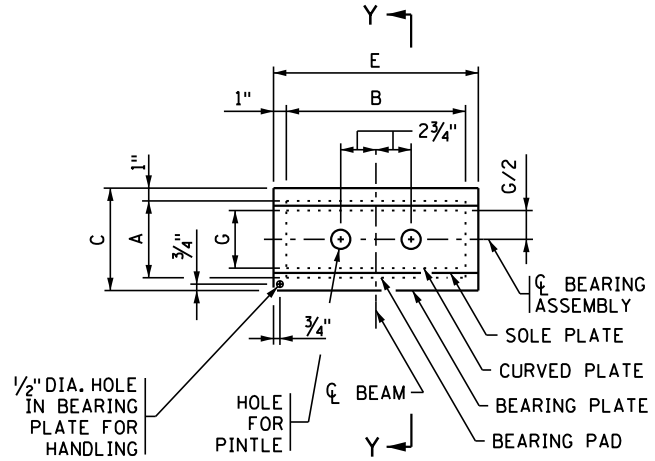

PLAN

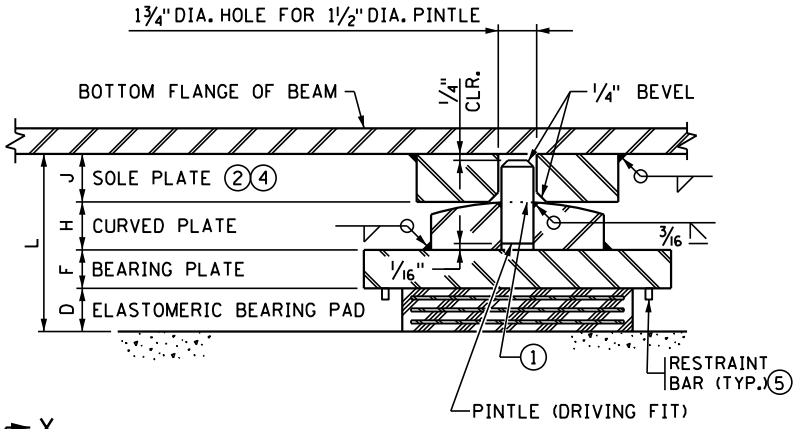

SECTION Y-Y

ENLARGED BEARING ASSEMBLY

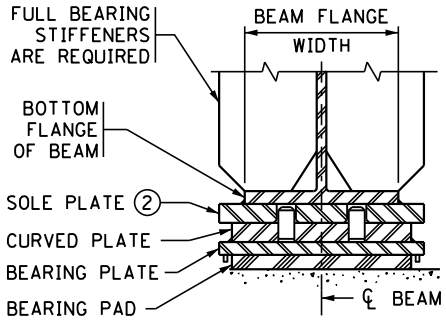

SECTION X-X

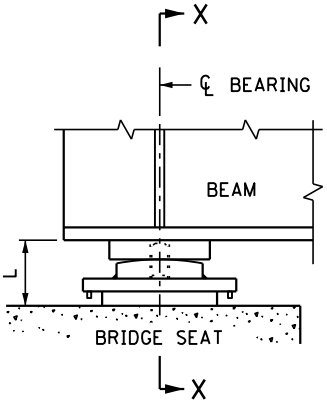

SIDE ELEVATION

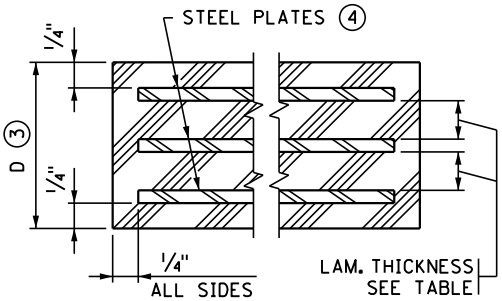

SECTION THROUGH BEARING PAD

TABLE

ASSEMBLY TYPE	LOCATION	BEAM FLANGE WIDTH	BEARING PAD SIZE			STEEL PLATES		LAMINATES		SHAPE FACTOR	BEARING PLATE SIZE			CURVED PLATE SIZE				SOLE PLATE SIZE			PINTLE DIA.	ASSY. HEIGHT	RESTRAINT PATTERN ⑤
			A	B	D	NO.	THICK.	NO.	THICK.		C	E	F	G	B	H	R ①	WID.	LEN.	J ②		L	

NOTES:

PROVIDE ELASTOMERIC MATERIALS AND PAD CONSTRUCTION PER SPEC. 3741.

PROVIDE STEEL PLATES PER SPEC. 3306 EXCEPT THE SOLE PLATE. PROVIDE SOLE PLATE WITH THE SAME MATERIAL SPECIFICATION AS THE STEEL BEAMS.

PROVIDE PINTLES PER SPEC. 3309.

GALVANIZE STRUCTURAL STEEL BEARING ASSEMBLY AFTER FABRICATION PER SPEC. 3394, EXCEPT AS NOTED.

PAYMENT FOR BEARING ASSEMBLY INCLUDES ALL MATERIAL ON THIS DETAIL EXCEPT THE SOLE PLATE. THE SOLE PLATE IS INCLUDED IN THE WEIGHT OF STRUCTURAL STEEL.

① THE MIN. RADIUS IS 16" UNLESS OTHERWISE SPECIFIED IN THE TABLE. THE MAX. RADIUS IS 24". FINISH TO 250 MICRO. THE FINISHED THICKNESS OF THE PLATE MAY BE 1/16" LESS THAN SHOWN.

② WHEN THE SOLE PLATE IS TAPERED, DIMENSIONS "J" AND "L" ARE THICKNESS OF SOLE PLATE AND BEARING ASSEMBLY AT CENTERLINE OF BEARING.

③ THE TOTAL THICKNESS SHOWN INCLUDES THE STEEL PLATES.

④ DO NOT GALVANIZE THIS PLATE.

⑤ REFER TO BEARING PAD RESTRAINT B-DETAIL FOR ADDITIONAL INFORMATION AND DETAILS.

DESIGNER NOTE (REMOVE PRIOR TO PLOTTING FINAL PLAN): PER NOTE ⑤ INCLUDE B307 AND MODIFY AS NECESSARY.

DESIGN DATA:

MAX. FACTORED SHEAR RESISTANCE:
- 50.3 KIPS PER 1½" DIA. PINTLE

APPROVED: NOVEMBER 22, 2002

Daniel L Dorgan

STATE BRIDGE ENGINEER

STATE OF MINNESOTA
DEPARTMENT OF TRANSPORTATION

CURVED PLATE BEARING ASSEMBLY
(STEEL BEAMS)
(EXPANSION)

REVISED
08-10-2006
12-17-2008
11-03-2015
11-02-2017
11-08-2018

DETAIL NO.
B355